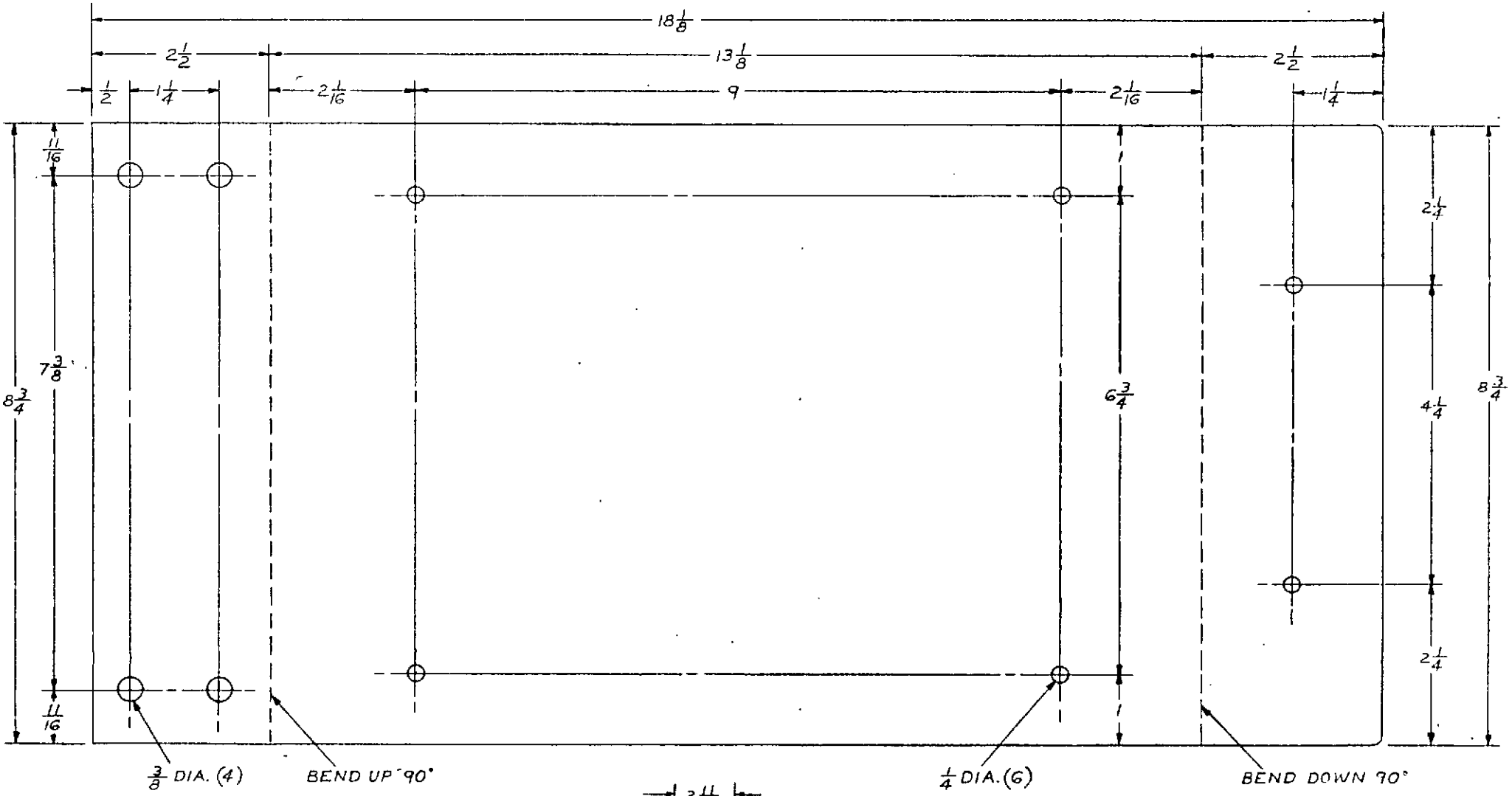

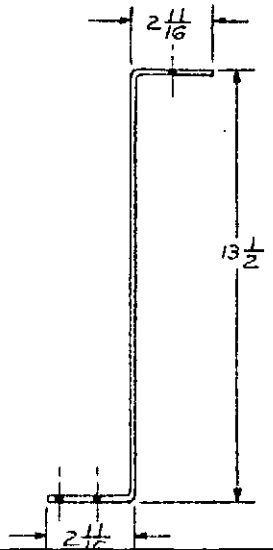

MAT'L 3/16 STL PLATE

KATOLIGHT CORPORATION MANKATO, MINNESOTA

SCALE	DATE	ASSEMBLY OR PART NO.	MODEL
NONE	10-11-76	204-283	UV549 AIR CLEANER MTG BRACKET

DESCRIPTION	KW	KVA