# Troubleshooting and Repair Manual K19 Engines

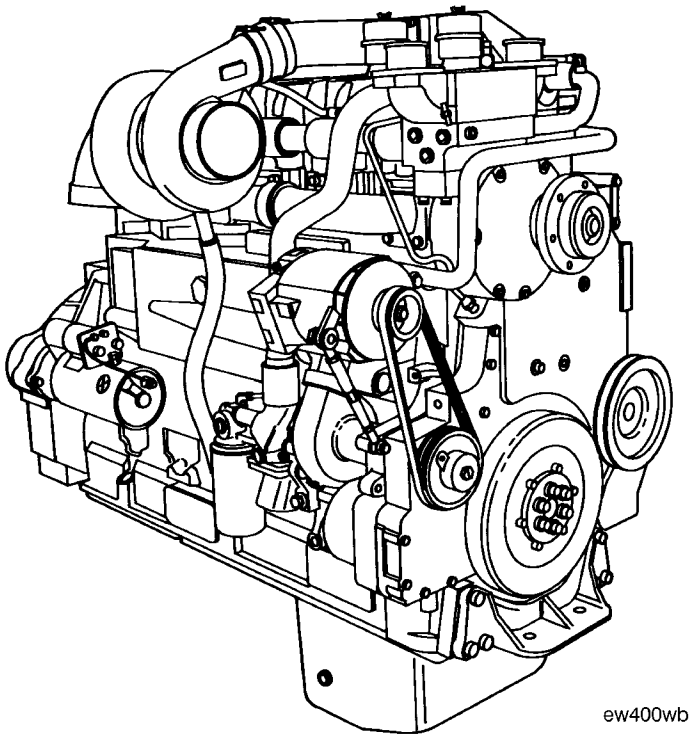


Copyright© 1986
Cummins Engine Company, Inc.

Bulletin No. 3810307-00
Printed 9-86

# NOTES

# Foreword

T This manual provides instructions for troubleshooting and repairing the K19 Engine in the chassis. Component and assembly rebuild procedure are provided in the K19 Engine Shop Manual.

The manual is organized to guide a service technician through the logical steps of identifying and correcting problems related to the engine.

This manual does not cover vehicle or equipment problems. Consult the vehicle or equipment manufacturer for repair procedures.

A series of specific service manuals (Shop, Specifications, Alternative Repair, and so on.) are available and can be ordered by filling out and mailing the Literature Order Form located in the Service Literature Section 14.

The repair procedures used in this manual are recommended by Cummins Engine Co., Inc. Some service procedures require the use of special service tools. Use the correct tools as described.

Reporting of errors, omissions, and recommendations for improving this publication by the user is encouraged. Please use the postage paid, self addressed Literature Survey Form in the back of this manual for communicating your comments.

The specifications and rebuild information in this manual is based on the information in effect at the time of printing. Cummins Engine Company, Inc. reserves the right to make any changes at any time without obligation. If differences are found between your engine and the information in this manual, contact a Cummins Authorized Repair Location, A Cummins Division Office, or the factory

The latest technology and the highest quality components were used to produce this engine. When replacement parts are needed, we recommend using only genuine Cummins or ReCon® exchange parts. These parts can be identified by the following trademarks:

# Table of Contents


| | Section | Page |
|---|---|---|
| **Introduction** | I | I-1 |
| **Engine Identification** | E | E-1 |
| - General Engine Specifications | | E-3 |
| - Engine Diagrams | | E-5 |
| **Troubleshooting** | T | T-1 |
| - Procedures and Techniques | | T-1 |
| - Symptoms List | | T-2 |
| - Symptoms Cause and Corrections Charts | | T-4 |
| **Engine Systems Repair** | | |
| - Cooling | 01 | 01-1 |
| - Lubricating Oil | 02 | 02-1 |
| - Combustion Air | 03 | 03-1 |
| - Compressed Air | 04 | 04-1 |
| - Fuel | 05 | 05-1 |
| - Electrical | 06 | 06-1 |
| - Base Engine Components | 07 | 07-1 |
| **Engine Testing ("In-Chassis")** | 08 | 08-1 |
| **Engine - Remove and Install** | 09 | 09-1 |
| **Engine Component Specifications** | 10 | 10-1 |
| **Alphabetical Index** | 11 | 11-1 |
| **Additional Service Literature** | 12 | 12-1 |
| **Accessory Component Manufacturers** | 13 | 13-1 |
| **Literature Survey Form** | 14 | 14-1 |

# NOTES

# Section i - Introduction

## Section Contents

Page

**About the Manual** ..... i-2

**Definition Of Terms** ..... i-11

**General Cleaning Instructions** ..... i-10
- Glass or Plastic Bead Cleaning ..... i-10
- Solvent and Acid Cleaning ..... i-10
- Steam Cleaning ..... i-10

**General Repair Instructions** ..... i-9

**General Safety Instructions** ..... i-8
- Important Safety Notice ..... i-8

**How to Use the Manual** ..... i-2

**Illustrations** ..... i-7

**Symbols** ..... i-3

# About the Manual

This Troubleshooting and Repair Manual is intended to aid in determining the cause of engine-related problems and to provide recommended repair procedures. The manual is divided into sections. Some sections contain reference numbers and procedure numbers. The reference numbers provide general information, specifications, diagrams, and service tools, where applicable. The procedure numbers describe specific repair procedures and are referred to in the Troubleshooting Logic Charts.

# How to Use the Manual

The manual is organized to provide an easy flow from problem identification to problem correction. A list of troubleshooting symptoms containing the most common engine problems is on Page T-2 in the Troubleshooting Section. Complete the following steps to locate and correct the problem:

(STEP 1.) Locate the symptom on the list.

Reference is made to the page number where the Troubleshooting Logic Chart is found.

(STEP 2.) The left column of the Troubleshooting Logic Chart indicates a probable cause, starting at the top with the simplest and easiest to repair or most likely to occur, and continuing downward to the most difficult and least likely to occur.

The right column provides a brief description of the corrective action with a procedure number or bulletin number reference for the repair procedure.

(STEP 3.) Locate the probable cause in the left column, and then turn to the procedure referenced in the right column or consult the bulletin number specificed.

The repair procedures are listed by system (cooling, lubricating oil, combustion air, compressed air, fuel, electrical, and base engine components).

(STEP 4.) The Troubleshooting Logic Charts are based on the following assumptions:

1. The engine has been installed according to the manufacturer's specifications.
2. The easiest repairs are done first.
3. Generic solutions to cover problems with the most common applications and OEM's (Original Equipment Manufacturer).

# Symbols

The following symbols have been used in this manual to help communicate the intent of the instructions. When one of the symbols appears, it conveys the meaning defined below:

**WARNING** - Serious personal injury or extensive property damage can result if the warning instructions are **not** followed.

**CAUTION** - Minor personal injury can result or a part, an assembly, or the engine can be damaged if the caution instructions are **not** followed.

Indicates a **REMOVAL or DISASSEMBLY** step.

Indicates an **INSTALLATION or ASSEMBLY** step.

**INSPECTION** is required.

**CLEAN** the part or assembly.

**PERFORM** a mechanical or time **MEASUREMENT**.

**LUBRICATE** the part or assembly.

Indicates that a **WRENCH or TOOL SIZE** will be given.

**TIGHTEN** to a specific torque.

**PERFORM** an electrical **MEASUREMENT**.

Refer to another location in this manual or another publication for additional information.

The component weighs 23 kg [50 lb] or more. To avoid personal injury, use a hoist or get assistance to lift the component.

# Simbolos

Los símbolos siguientes son usados en este manual para clarificar el proceso de las instrucciones. Cuando aparece uno de estos símbolos, su significado se especifica en la parte inferior.

**ADVERTENCIA** - Serios daños personales o daño a la propiedad puede resultar si las instrucciones de Advertencia **no** se consideran.

**PRECAUCION** - Daños menores pueden resultar, o de piezas del conjunto o el motor puede averiarse si las instrucciones de Precaución **no** se siguen.

Indica un paso de **REMOCION** o **DESMONTAJE.**

Indica un paso de **INSTALACION** o **MONTAJE.**

Se requiere **INSPECCION.**

**LIMPIESE** la pieza o el montaje.

**EJECUTESE** una **MEDICION** mecánica o del tiempo.

**LUBRIQUESE** la pieza o el montaje.

Indica que se dará una **LLAVE DE TUERCAS** o el **TAMAÑO DE HERRAMIENTA.**

**APRIETESE** hasta un par torsor específico.

**EJECUTESE** una **MEDICION** eléctrica.

Para información adicional refiérase a otro emplazamiento de este manual o a otra publicación anterior.

El componente pesa 23 kg [50 lb] o mas. Para evitar dano corporal empleen una cabria u obtengan ayuda para elevar el componente.

# Symbole

In diesem Handbuch werden die folgenden Symbole verwendet, die wesentliche Funktionen hervorheben. Die Symbole haben folgende Bedeutung:

**WARNUNG** - Wird die Warnung **nicht** beachtet, dann besteht erhöhte Unfall- und Beschädigungsgefahr.

**VORSICHT** - Werden die Vorsichtsmassnahmen **nicht** beachtet, dann besteht Unfall- und Beschädigungsgefahr.

**AUSBAU** bzw. **ZERLEGEN.**

**EINBAU** bzw. **ZUSAMMENBAU.**

**INSPEKTION** erforderlich.

Teil oder Baugruppe **REINIGEN.**

**DIMENSION** - oder **ZEITMESSUNG.**

Teil oder Baugruppe **ÖLEN.**

**WERKZEUGGRÖSSE** wird angegeben.

**ANZUG** auf vorgeschriebenes Drehmoment erforderlich.

Elektrische **MESSUNG DURCHFÜHREN.**

Weitere Informationen an anderer Stelle bzw. in anderen Handbüchern.

Das teil weigt 23 kg [50 lb] oder mehr. Zur vermeidung von koerperverletzung winde benutzen oder hilfe beim heben des teils in anspruch nehmen.

# Symboles

Les symboles suivants sont utilisés dans ce manuel pour aider à communiquer le but des instructions. Quand l'un de ces symboles apparaît, il évoque le sens défini ci-dessous:

**AVERTISSEMENT** - De graves lésions corporelles ou des dommages matériels considérables peuvent survenir si les instructions données sous les rubriques Avertissement **ne** sont **pas** suivies.

**ATTENTION** - De petites lésions corporelles peuvent survenir, ou bien une piéce, un ensemble ou le moteur peuvent être endommagés si les instructions données sous les rubriques Attention **ne** sont **pas** suivies.

Indique une opération de **DEPOSE.**

Indique une opération de **MONTAGE.**

**L'INSPECTION** est nécessaire.

**NETTOYER** la piéce ou l'ensemble.

**EFFECTUER** une **MESURE** mécanique ou de temps.

**GRAISSER** la piéce ou l'ensemble.

Indique qu'une **DIMENSION DE CLE** ou **D'OUTIL** sera donnée.

**SERRER** à un couple spécifique.

**EFFECTUER** une **MESURE** électrique.

Se reporter à un autre endroit dans ce manuel ou à une autre publication pour obtenir des informations plus complétes.

Le composant pese 23 kg [50 lb] ou davantage. Pour eviter toute blessure, employer un appariel de levage ou demander de l'aide pour le soulever.

## Illustrations

The illustrations used in the Repair Sections of this manual are intended to give an example of a problem and to show what to look for and where the problem can be found. Some of the illustrations are generic and might **not** look exactly like the engine or parts used in your application. The illustrations may contain symbols to indicate an action required and an acceptable or **not** acceptable condition.

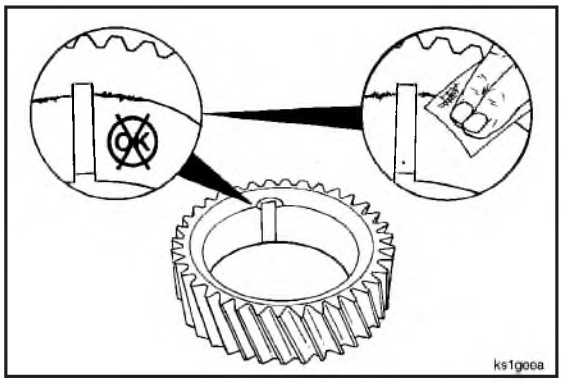


The illustrations are intended to show repair or replacement procedures with the engine in-chassis. The illustration can differ from your application, but the procedure given will be the same.

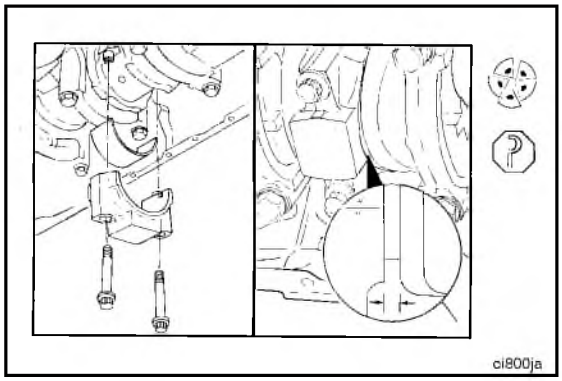

# General Safety Instructions

## Important Safety Notice

**WARNING**

**Improper practices or carelessness can cause burns, cuts, mutilation, asphyxiation or other bodily injury or death.**

Read and understand all of the safety precautions and warnings before performing any repair. This list contains the general safety precautions that **must** be followed to provide personal safety. Special safety precautions are included in the procedures when they apply.

- Make sure the work area surrounding the product is dry, well lit, ventilated; free from clutter, loose tools, parts, ignition sources and hazardous substances. Be aware of hazardous conditions that can exist.
- **Always** wear protective glasses and protective shoes when working.
- Rotating parts can cause cuts, mutilation or strangulation.
- Do **not** wear loose-fitting or torn clothing. Remove all jewelry when working.
- Disconnect the battery (negative [-] cable first) and discharge any capacitors before beginning any repair work. Disconnect the air starting motor if equipped to prevent accidental engine starting. Put a ''Do **Not** Operate'' tag in the operator's compartment or on the controls.
- Use ONLY the proper engine barring techniques for manually rotating the crankshaft. Do **not** attempt to rotate the crankshaft by pulling or prying on the fan. This practice can cause serious personal injury, property damage, or damage to the fan blade(s) causing premature fan failure.
- If an engine has been operating and the coolant is hot, allow the engine to cool before you slowly loosen the filler cap and relieve the pressure from the cooling system.
- Do **not** work on anything that is supported ONLY by lifting jacks or a hoist. **Always** use blocks or proper stands to support the product before performing any service work.
- Relieve all pressure in the air, oil, and the cooling systems before any lines, fittings, or related items are removed or disconnected. Be alert for possible pressure when disconnecting any device from a system that utilizes pressure. Do **not** check for pressure leaks with your hand. High pressure oil or fuel can cause personal injury.
- To prevent suffocation and frostbite, wear protective clothing and ONLY disconnect liquid refrigerant (freon) lines in a well ventilated area. To protect the environment, liquid refrigerant systems **must** be properly emptied and filled using equipment that prevents the release of refrigerant gas (fluorocarbons) into the atmosphere. Federal law requires capture and recycling refrigerant.
- To avoid personal injury, use a hoist or get assistance when lifting components that weigh 23 kg [50 lb] or more. Make sure all lifting devices such as chains, hooks, or slings are in good condition and are of the correct capacity. Make sure hooks are positioned correctly. **Always** use a spreader bar when necessary. The lifting hooks **must not** be side-loaded.
- Corrosion inhibitor contains alkali. Do **not** get the substance in your eyes. Avoid prolonged or repeated contact with skin. Do **not** swallow internally. In case of contact, immediately wash skin with soap and water. In case of contact, immediately flood eyes with large amounts of water for a minimum of 15 minutes. IMMEDIATELY CALL A PHYSICIAN. KEEP OUT OF REACH OF CHILDREN.
- Naptha and Methyl Ethyl Ketone (MEK) are flammable materials and **must** be used with caution. Follow the manufacturer's instructions to provide complete safety when using these materials. KEEP OUT OF REACH OF CHILDREN.
- To avoid burns, be alert for hot parts on products that have just been turned OFF, and hot fluids in lines, tubes, and compartments.
- **Always** use tools that are in good condition. Make sure you understand how to use them before performing any service work. Use ONLY genuine Cummins or Cummins Recon replacement parts.
- **Always** use the same fastener part number (or equivalent) when replacing fasteners. Do **not** use a fastener of lessor quality if replacements are necessary.
- Do **not** perform any repair when fatigued or after consuming alcohol or drugs that can impair your functioning.

# General Repair Instructions

This engine incorporates the latest diesel technology at the time it was manufactured; yet, it is designed to be repaired using normal repair practices performed to quality standards.

- **Cummins Engine Company, Inc. does not recommend or authorize any modifications or repairs to engines or components except for those detailed in Cummins Service Information. In particular, unauthorized repair to safety-related components can cause personal injury or death. Below is a partial listing of components classified as safety-related:**

  **Air Compressor**
  **Air Controls**
  **Air Shutoff Assemblies**
  **Balance Weights**
  **Cooling Fan**
  **Fan Hub Assembly**
  **Fan Mounting Bracket(s)**
  **Fan Mounting Capscrews**
  **Fan Hub Spindle**
  **Flywheel**
  **Flywheel Crankshaft Adapter**
  **Flywheel Mounting Capscrews**
  **Fuel Shutoff Assemblies**
  **Fuel Supply Tubes**
  **Lifting Brackets**
  **Throttle Controls**
  **Turbocharger Compressor Casing**
  **Turbocharger Oil Drain Line(s)**
  **Turbocharger Oil Supply Line(s)**
  **Turbocharger Turbine Casing**
  **Vibration Damper Mounting Capscrews**

- **Follow All Safety Instructions Noted in the Procedures.**
  - Follow the manufacturer's recommendations for cleaning solvents and other substances used during the repair of the engine. Some solvents and used engine oil have been identified by government agencies as toxic or carcinogenic. Avoid excessive breathing, injestion and contact with such substances. **Always** use good safety practices with tools and equipment.

- **Provide A Clean Environment and Follow the Cleaning Instructions Specified in the Procedures**
  - The engine and its components **must** be kept clean during any repair. Contamination of the engine or components will cause premature wear.

- **Perform the Inspections Specified in the Procedures.**

- **Replace all Components or Assemblies Which are Damaged or Worn Beyond the Specifications**

- **Use Genuine Cummins New or ReCon Service Parts and Assemblies**
  - The assembly instructions have been written to use again as many components and assemblies as possible. When it is necessary to replace a component or assembly, the procedure is based on the use of new Cummins or Cummins ReCon components. All of the repair services described in this manual are available from all Cummins Distributors and most Dealer locations.

- **Follow The Specified Disassembly and Assembly Procedures to Avoid Damage to the Components.**

Complete rebuild instructions are available in the shop manual which can be ordered or purchased from a Cummins Authorized Repair Location. Refer to Section 14, Literature, for ordering instructions.

# General Cleaning Instructions

## Solvent and Acid Cleaning

Several solvent and acid-type cleaners can be used to clean the engine parts. **Cummins Engine Company, Inc. does not recommend any specific cleaners. Always** follow the cleaner manufacturer's instructions.

Experience has shown that the best results can be obtained using a cleaner that can be heated to 90 to 95 degrees Celsius [180 to 200 degrees Fahrenheit]. A cleaning tank that provides a constant mixing and filtering of the cleaning solution will give the best results.

Remove all the gasket material, o-rings, and the deposits of sludge, carbon, etc., with a wire brush or scraper before putting the parts in a cleaning tank. Be careful **not** to damage any gasket surfaces. When possible, steam clean the parts before putting them in the cleaning tank.

**Warning: Acid is extremely dangerous, and can damage the machinery. Always provide a tank of strong soda water as a neutralizing agent.**

Rinse all of the parts in hot water after cleaning. Dry completely with compressed air. Blow the rinse water from all of the capscrew holes and the oil drillings.

If the parts are **not** to be used immediately after cleaning, dip them in a suitable rustproofing compound. The rustproofing compound **must** be removed from the parts before installation on the engine.

## Steam Cleaning

Steam cleaning can be used to remove all types of dirt that can contaminate the cleaning tank. It is a good way to clean the oil drillings.

**Warning: Wear protective clothing to prevent personal injury from the high pressure and extreme heat.**

Do **not** steam clean the following parts:

1. Electrical Components
2. Wiring
3. Injectors
4. Fuel Pump
5. Belts and Hoses
6. Bearings

## Glass or Plastic Bead Cleaning

Glass or plastic bead cleaning can be used on many engine components to remove carbon deposits. The cleaning process is controlled by the size of the glass or plastic beads, the operating pressure, and the cleaning time.

**Caution: Do not use glass or plastic bead cleaning on aluminum piston skirts. Do not use glass bead cleaning on aluminum ring grooves. Small particles of glass or plastic will embed in the aluminum and result in premature wear. Valves, turbocharger shafts, etc., can also be damaged. Follow the cleaning directions listed in the procedures.**

**NOTE:** Plastic bead blasting media, Part No. 3822735, can be used to clean aluminum ring grooves. Do **not** use any bead blasting media on pin bores or aluminum skirts.

Follow the equipment manufacturer's cleaning instructions. The following guidelines can be used to adapt to manufacturer's instructions:

1. Bead size:
   - Use U.S. size No. 16-20 for piston cleaning with plastic bead media, Part No. 3822735.
   - Use U.S. size No. 70 for piston domes with glass media.
   - Use U.S. size No. 60 for general purpose cleaning with glass media.
2. Operating Pressure:
   - Glass: Use 620 kPa [90 psi] for general purpose cleaning.
   - Plastic: Use 270 kPa [40 psi] for piston cleaning.
3. Steam clean or wash the parts with solvent to remove all of the foreign material and glass or plastic beads after cleaning. Rinse with hot water. Dry with compressed air.
4. Do **not** contaminate the wash tanks with glass or plastic beads.

# Definition Of Terms

| | |
|---|---|
| A.C.: | Alternating Current |
| ACT Harness: | The wiring harness used to connect the actuators to the ECM |
| Alligator Clip: | An electrical test clip attached to the end of a wire |
| API: | American Petroleum Institute |
| ASA: | Air Signal Attenuator |
| ASTM: | American Society of Testing and Materials |
| ATDC: | After Top Dead Center; refers to the position of the piston or the crankshaft rod journal. The piston is moving downward on the power stroke or intake stroke. |
| BDC: | Bottom Dead Center; refers to the position of the piston or the crankshaft rod journal. The piston is at its lowest position in the cylinder. |
| BTDC: | Before Top Dead Center; refers to the position of the piston or the crankshaft rod journal. The piston is moving upward on the power stroke or exhaust stroke. |
| C: | Celsius |
| CAC: | Charge Air Cooler |
| CARB: | California Air Resources Board |
| CELECT™: | A fuel control system that electronically controls the fuel injection to improve fuel economy and to reduce the exhaust emissions. The system does this by controlling the torque and horsepower curve, AFC (smoke) function, engine high speed, engine low idle speed and the road speed.<br><br>The CELECT™ system also can control fan clutch operation, engine brake enabling and turbocharger wastegating.<br><br>Additional electronic features include cruise control, PTO, gear down protection, progressive shifting, automotive or VS governor and idle shutoff. |
| C.I.D.: | Cubic Inch Displacement |
| Circumferential Direction: | In the direction of a circle in respect to the centerline of a round part or a bore. |
| Cm: | Centimeter |
| Compulink™: | A Cummins service tool used for electronic system analysis and to reprogram the system |
| Concentricity: | A measurement of the **difference** between the centers of **either** two or more parts, **or** the bores in one part. |
| CPL: | Control Parts List; this listing identifies the specific parts that **must** be installed on the engine to meet agency certification. |
| cSt: | Centistokes |
| Cummins Sealant: | This is a one part Room Temperature Vulcanizing (RTV) silicone rubber, adhesive and sealant material having **high** heat and oil resistance, and **low** compression set.<br><br>Some of the equivalent products are Marston Lubricants, Hylosil, Dow Corning, Silastic 732, Loctite Superflex, General Electric 1473, and General Electric 1470. |
| DCA: | Diesel Coolant Additive |

| | |
|---|---|
| D.C.: | Direct Current |
| Deutsch Connector: | An electrical connector |
| Dye Penetrant Method: | A method used to check for cracks in a part by using a dye penetrant and a developer. Use Part No. 3375432 Crack Detection Kit, or equivalent. |
| End Clearance: | The clearance in an assembly determined by pushing the shaft in an axial direction **one way,** and then pushing the shaft the **other way.** |
| Echek™ | A Cummins hand held service tool used for electronic system analysis, adjusting features and programmable parameters. |
| ECM: | Electronic Control Module. |
| E.C.S.: | Emission Control System |
| EPA: | Environmental Protection Agency |
| EPS: | Engine Position Sensor |
| E.S.N.: | Engine Serial Number |
| ESS: | Engine Speed Sensor |
| F: | Fahrenheit |
| ft-lb: | Foot Pound |
| GVW: | Gross Vehicle Weight |
| Hammer: | A hand tool consisting of a hard steel head on a handle. |
| Hg: | Mercury |
| HP: | Horsepower |
| $H_20$: | Water |
| ID: | Inside Diameter |
| in-lb: | Inch Pound |
| kg: | Kilograms |
| km: | Kilometers |
| km/l: | Kilometers per Liter |
| kPa: | Kilopascal |
| l: | Liter |
| Loctite 290: | A single component, anaerobic, polyester resin, liquid sealant compound that hardens between closely fitted metal surfaces producing a tough, hard bond with good characteristics. An equivalent product is Perma-Lok HL 126. |
| Loctite 609: | A single component anaerobic, liquid adhesive that meets or exceeds the requirements of MIL-R-46082A (MR) TYPE 1.<br><br>Some of the equivalent products are Loctite 601 and Permabond HL 138. |
| Lubriplate 105: | A mineral oil base grease with calcium soap (2 percent to 6 percent), and zinc oxide (2 percent to 4 percent) additives. |
| m: | Meter |
| Magnetic Particle Inspection: | A method of checking for cracks in **either** steel **or** iron parts. This method requires a Magnaflux machine, or an equivalent machine that imparts a magnetic field on the part being checked. |

| | |
|---|---|
| Mallet: | A hand tool consisting of a soft head; **either** wood, plastic, lead, brass, **or** rawhide on a handle. |
| MAX: | Maximum allowed |
| MIN: | Minimum allowed |
| Mini-Gen: | Speed Sensor |
| mm: | Millimeter |
| MPa: | Megapascal |
| MPH: | Miles Per Hour |
| MPQ: | Miles Per Quart |
| N•m: | Newton-meter |
| No.: | Number |
| OD: | Outside Diameter |
| OEM: | Original Equipment Manufacturer |
| OEM Harness: | The wiring harness used to connect the ECM to the vehicle |
| OS: | Oversize |
| ppm: | Parts Per Million |
| Protrusion: | The **difference** in the height between two parts in the assembled state. |
| psi: | Pounds Per Square Inch |
| PTO: | Power Takeoff |
| RPM: | Revolutions Per Minute |
| S.A.E:. | Society of Automotive Engineers |
| SEN Harness: | The wiring harness used to connect the engine system sensors to the ECM |
| STD: | Standard |
| TC: | Torque Converter; used when referring to the torque converter cooler. |
| TDC: | Top Dead Center; refers to the position of the piston or the crankshaft rod journal. The piston is at its highest position in the cylinder. The rod journal is pointing straight up toward the piston. |
| TIR: | Total Indicator Reading; used when measuring the concentricity or the run out. The TIR refers to the total movement of the needle on a dial indicator, from the most **negative** reading to the most **positive** reading. |
| VOM: | Volt Ohm Meter |
| VS: | Variable Speed |
| VSS: | Vehicle Speed Sensor |

Water Pump Grease: A premium high temperature grease that will lubricate antifriction bearings continually from **minus** 40 C [**minus** 40 F] to **plus** 150 C [**plus** 350 F].

Some of the greases meeting this requirement are Aeroshell No. 5, Chevron SRI, Amoco Rykon Premium No. 2, Texaco Premium RB, and Shell Dolium R.

Aeroshell No. 5 is **not** compatible with the other greases and **must not** be mixed. Cummins Engine Co., Inc., uses Aeroshell No. 5 on new engines and components.

# Section E - Engine and Component Identification

## Section Contents

Page

**Engine Identification** ..... E-2
Cummins Engine Nomenclature ..... E-2
Engine Dataplate ..... E-2
Fuel Pump Dataplate ..... E-2

**External Engine Components** ..... E-7

**General Specifications** ..... E-3
Air Induction System ..... E-5
Cooling System ..... E-5
Electrical System ..... E-6
Exhaust System ..... E-5
Fuel System ..... E-6
General Engine Data ..... E-4
Lubricating Oil System ..... E-5

# Engine Identification

## Cummins Engine Nomenclature

The model name provides the following data:

K T T A 19

- 19 = Displacement in Litres
- A = Engine is Aftercooled
- T = Engine has Two Turbochargers
- T = Engine is Turbocharged
- K = Series (Family of Engines)

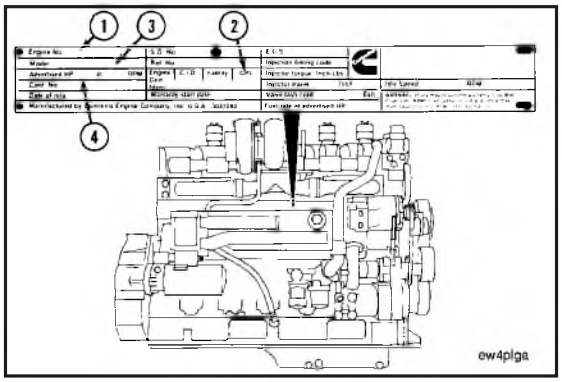


## Engine Dataplate

The engine dataplate shows specific information about your engine. The engine serial number (E.S.N.) (1), Control Parts List (CPL) (2), Model (3), and Horsepower and RPM rating provide information for ordering parts and service needs.

**NOTE:** The engine dataplate **must not** be changed unless approved by Cummins Engine Company, Inc.

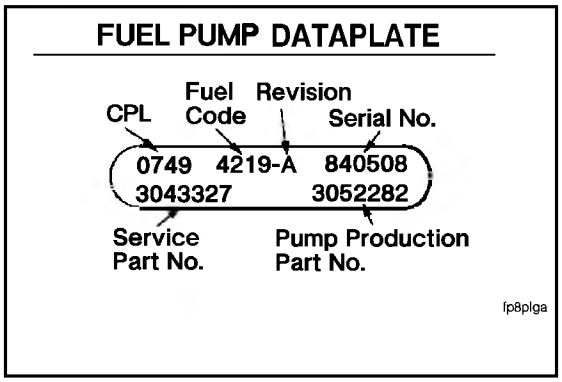


## Fuel Pump Dataplate

The fuel pump dataplate is located on the top of the fuel pump. It provides information for fuel pump calibration.

# General Specifications

## Metric (U.S. Customary)

**NOTE:** Listed below are general specifications for this engine. Refer to each System Section for additional specifications.

Engine Speed ..... Refer to the engine dataplate for optional speed rating.

Displacement ..... 18.7 liters [1150 C.I.D.]

Bore and stroke ..... 158.75 mm x 158.75 mm [6.25 in x 6.25 in]

Engine Weight

- Dry ..... 1720 kg [3800 lb]
- Wet ..... 1800 Kg [3965 lb]

Firing order ..... 1-5-3-6-2-4

Valve and injector settings:

- Intake valve adjustment ..... 0.36 mm [0.014 in]
- Intake valve limits ..... 0.28 to 0.43 mm [0.011 to 0.017 in]
- Exhaust valve adjustment ..... 0.69 mm [0.027 in]
- Exhaust valve limits ..... 0.60 to 0.76 mm [0.024 to 0.030 in]
- PTD Non-Top Stop injector travel adjustment ..... 7.72 mm [0.304 in]
- PTD Non-Top Stop injector travel limits ..... 7.67 to 7.77 mm [0.302 to 0.306 in]
- HVT Non-Top Stop injector travel adjustment ..... 10.24 mm [0.403 in]
- HVT Non-Top Stop injector travel limits ..... 10.18 to 10.29 mm [0.401 to 0.405 in]
- STC Top Stop injector adjustment (in engine) ..... 0.6 to 0.7 N•m [5 to 6 in-lb]
- STC Top Stop injector recheck limits ..... 0.00 to 0.05 mm [0.000 to 0.002 in lash]
- STC Top Stop injector travel limit (total travel in engine) ..... 10.18 to 10.29 mm [0.401 to 0.405 in]
- Premium K STC injector adjustment (in engines) ..... 0.6 to 0.7 N•m [5 to 6 in-lb]
- Premium K STC injector re-check limits ..... 0.00 to 0.05 mm [0.000 to 0.002 in lash]
- Premium K STC injector travel limit (total travel in engines) ..... 12.47 to 12.57 mm [0.491 to 0.495 in]

Compression Ratio:

- KT ..... 15.5:1
- KTA ..... 14.5:1 or 15.5:1
- KTA-C(700) ..... 13.8:1
- KTTA ..... 13.8:1

Crankshaft Rotation (viewed from the front of the engine) ..... Clockwise

## General Engine Data

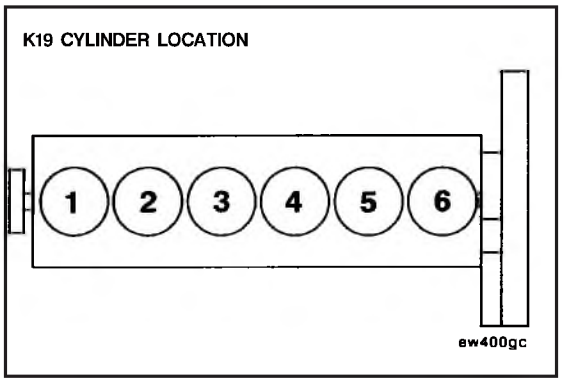


Cylinder location and Firing Order:

1-5-3-6-2-4

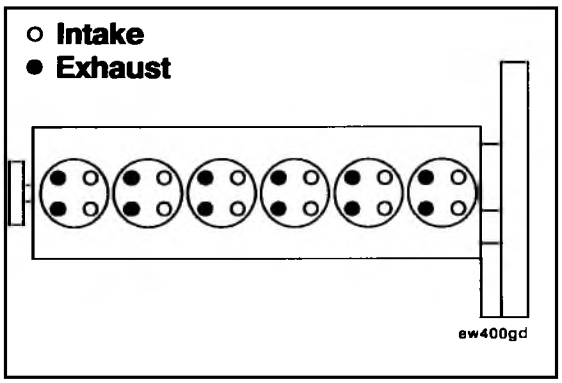


**Intake** and **Exhaust** Valve locations.

## Air Induction System

Maximum Allowable Intake Restriction:

- With Clean Filter Element ..... 380 mm-$H_2O$ [15 in-$H_2O$]
- With Dirty Filter Element ..... 635 mm-$H_2O$ [25 in-$H_2O$]

## Lubricating Oil System

Oil Pressure, Main Oil Rifle (15W40 oil at 107°C [225°F]):

- (Idle) RPM ..... 138 kPa to 483 kPa [20 psi to 75 psi]
- (Rated) RPM ..... 345 kPa to 517 kPa [50 psi to 75 psi]

Oil Temperature - Maximum ..... 120°C [250°F]

Oil Pan Capacity ..... Refer to Section 11

## Cooling System

Coolant Capacity (Engine ONLY) ..... 30 Liters [32 U.S. Quarts]

Standard Thermostat Range ..... 80°C to 90°C [175°F to 195°F]

Coolant Pressure Cap (Minimum) ..... 50 kPa [7 psi]

Coolant Temperature
Minimum Top Tank ..... 70°C [160°F]
Maximum Top Tank ..... 95°C [203°F]

## Exhaust System

Back Pressure - Maximum ..... 75 mm-Hg [3 in-Hg]

Exhaust Pipe Size (Normally Acceptable Inside Diameter)

- KTTA ..... 152 mm [6 inch]
- KTA ..... 127 mm [5 inch]
- KT ..... 127 mm [5 inch]

## Fuel System

**NOTE:** For performance and fuel rate values, refer to the engine data sheet, or the fuel pump code for the particular model involved.

Maximum Allowable Restriction to Pump (at rated power):

- With Clean Filter ..... 100 mm Hg [4 in Hg]
- With Dirty Filter ..... 200 mm Hg [8 in Hg]

Maximum Allowable Return Line Restriction ..... 63 mm Hg [2.5 in Hg]

Maximum Allowable Return Line Restriction
with Check Valves and/or Overhead Tanks ..... 165 mm Hg [6.5 in Hg]

## Electrical System

Minimum Recommended Battery Capacity

| System Voltage | Ambient Temperatures | | | |
|---|---|---|---|---|
| | -18°C (0°F) | | 0°C (32°F) | |
| | Cold Cranking Amperes | Reserve Capacity* Amperes | Cold Cranking Amperes | Reserve Capacity* Amperes |
| 12 Volt** | 1800 | 640 | 1280 | 480 |
| 24 Volt*** | 900 | 320 | 640 | 240 |

* **Note:** The number of plates within a given battery size determines reserve capacity. Reserve capacity is the length of time sustained cranking can occur.

** **Note:** Not recommended for K19 Engines.

*** **Note:** CCA ratings are based on two, 12 volt batteries in series.

**Batteries (Specific Gravity)**

| Battery State of Charge | Specific Gravity @ 27°C [80°F] |
|---|---|
| 100% | 1.260-1.280 |
| 75% | 1.230-1.250 |
| 50% | 1.200-1.220 |
| 25% | 1.170-1.190 |
| Discharged | 1.110-1.130 |

ea800ka

## External Engine Components

The illustrations which follow show the locations of the major external engine components, the filters, and other service and maintenance points. Some external components will be at different locations for different engine models.

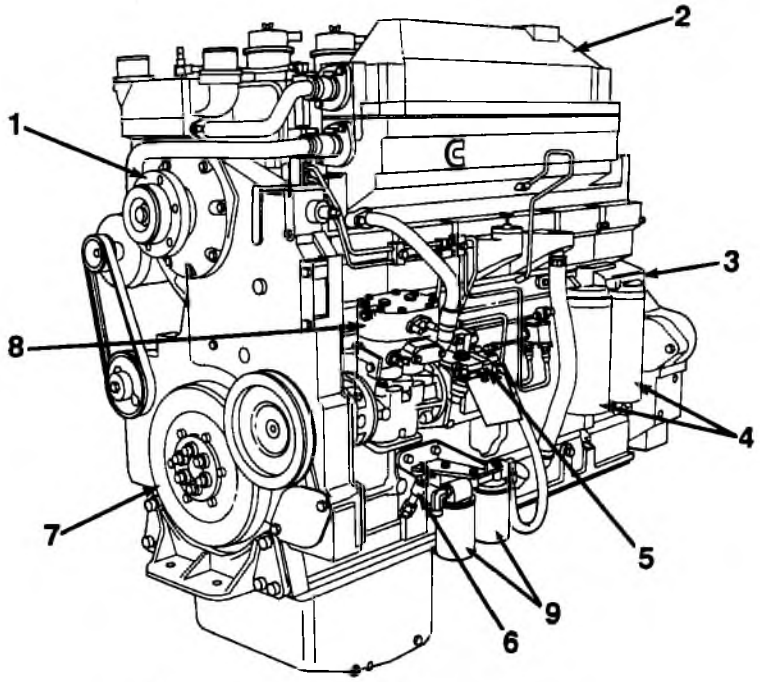


FUEL PUMP SIDE - KTA19

1. Fan Hub (Gear Driven Type)
2. Aftercooler Assembly
3. Bypass Oil Filter Supply
4. Full Flow - Oil Filters
5. Fuel Pump
6. Dipstick
7. Vibration Damper
8. Air Compressor
9. Fuel Filters

ew400ge

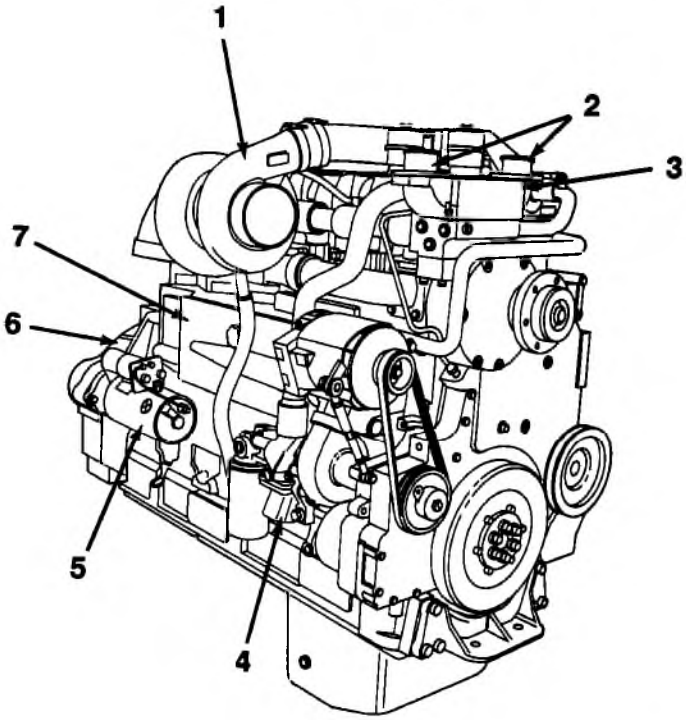


EXHAUST SIDE - KTA19

1. Turbocharger
2. Coolant Outlet
3. Thermostat Housing
4. Coolant Inlet
5. Starting Motor
6. Flywheel Housing
7. Engine Oil Cooler Assembly

ew400gg

## FUEL PUMP SIDE - KTTA19

1. Fan Hub (Belt Driven)
2. Aftercooler Assembly
3. Bypass Oil Filter Supply
4. Full Flow - Oil Filters
5. Dipstick
6. Fuel Pump
7. Vibration Damper
8. STC Fuel Pressure Switch
9. STC Oil Control Valve
10. Fuel Filters

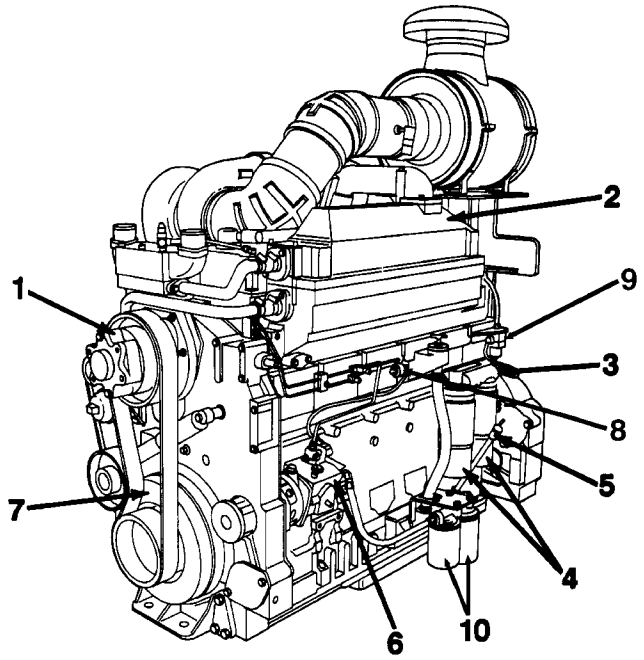


ew400gh

## EXHAUST SIDE - KTTA19

1. Turbocharger (High Pressure)
2. Turbocharger (Low Pressure)
3. Coolant Outlet
4. Thermostat Housing
5. Coolant Inlet
6. Starting Motor
7. Flywheel Housing
8. Oil Cooler Assembly
9. Belt Tensioner

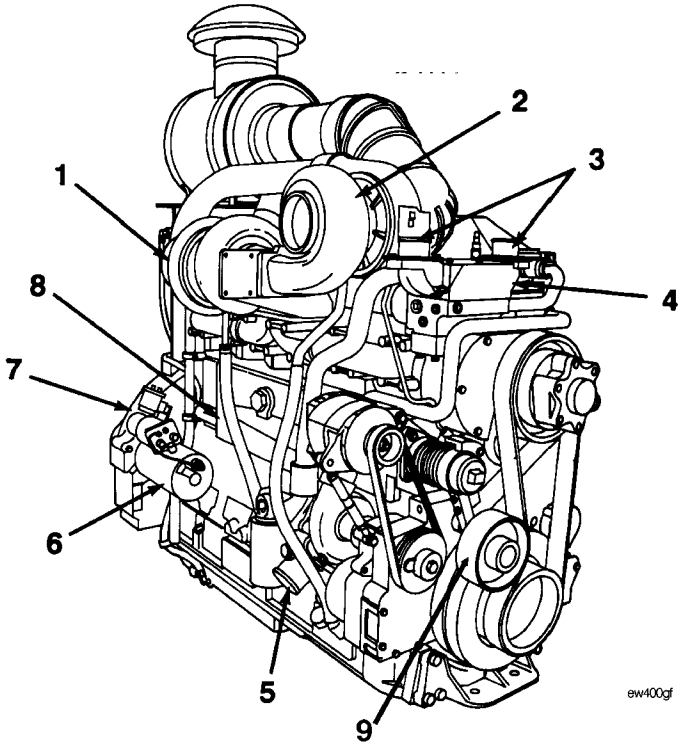


ew400gf

# Section T - Troubleshooting

## Procedures and Techniques

A thorough analysis of the problem is the key to successful troubleshooting. The more information known about the problem, the faster and easier it can be solved.

The Troubleshooting Symptoms Charts beginning on page T-6 are organized so that a problem can be located and corrected by doing the easiest and most logical things first. Complete all steps in the sequence shown from top to bottom.

It is **not** possible to include all the possible solutions to problems that can occur; however, these charts should stimulate a thought process that will lead to the cause and correction of the problem.

Follow these basic troubleshooting steps:

- Get all the facts concerning the problem.
- Analyze the problem thoroughly.
- Relate the symptoms to the basic engine systems and components.
- Consider any recent maintenance or repair action that may relate to the problem.
- Double-check before beginning any disassembly.
- Solve the problem by using the logic charts and doing the easiest things first.
- Determine the cause of the problem and make a thorough repair.
- After repairs have been made, operate the engine to be sure the cause of the problem has been corrected.

For easy reference, an alphabetical listing of all the troubleshooting charts is printed on pages T-2 and T-3. A listing of the troubleshooting charts for each system is printed on pages T-4 and T-5.

# Troubleshooting Charts

## (Alphabetical Listing)

Page No.

1. Air Compressor Noise - Excessive ..... T-31
2. Air Compressor Pumping Excessive Lubricating Oil ..... T-28
3. Air Compressor Slow Air Pressure Rise ..... T-26
4. Air Compressor Will Not Maintain Adequate Air Pressure But Not Pumping Continuously ..... T-27
5. Air Compressor Will Not Pump ..... T-29
6. Air Compressor Will Not Stop Pumping ..... T-30
7. Alternator Malfunctioning ..... T-60
8. Coolant in the Lubricating Oil ..... T-21
9. Coolant Loss ..... T-10
10. Coolant Temperature Above Normal ..... T-6
11. Coolant Temperature Below Normal ..... T-9
12. Crankcase Gases (Blowby) Excessive ..... T-61
13. Engine Cranks But Will Not Start (No Exhaust Smoke) ..... T-32
14. Engine Decelerates Poorly ..... T-52
15. Engine Hard to Start or Will Not Start (Exhaust Smoke Present) ..... T-34
16. Engine Noise Diagnostic Procedure ..... T-63
17. Engine Noise Excessive ..... T-64
18. Engine Power Output Low ..... T-44
19. Engine Runs Rough or Misfires (Warm Engine) ..... T-38
20. Engine Starts But Will Not Keep Running ..... T-36
21. Engine Surges at High Idle ..... T-54
22. Engine Surges at Low Idle ..... T-42
23. Engine Surges Under Load ..... T-43
24. Engine Vibration Excessive ..... T-62
25. Engine Will Not Crank or Cranks Slowly (Air Starter) ..... T-57
26. Engine Will Not Crank or Cranks Slowly (Electric Starter) ..... T-58
27. Engine Will Not Reach Rated RPM When Loaded ..... T-43
28. Engine Will Not Shut Off ..... T-51
29. Exhaust Smoke Excessive Under Load ..... T-50
30. Exhaust Smoke (White) at Idle Excessive (Warm Engine) ..... T-66
31. Fuel Consumption Excessive ..... T-56
32. Fuel in the Coolant ..... T-12
33. Fuel in the Lubricating Oil ..... T-22
34. Idle Rough ..... T-40
35. Lubricating Oil Consumption Excessive ..... T-18
36. Lubricating Oil Pressure High ..... T-15
37. Lubricating Oil Pressure Low ..... T-13

# Troubleshooting Charts (Continued)

## (Alphabetical Listing)

Page No.

38. Lubricating Oil Temperature Above Normal ..... T-16
39. Lubricating Oil Sludge in the Engine Crankcase Excessive ..... T-20
40. Lubricating or Hydraulic Oil in the Coolant ..... T-17
41. Throttle Response Slow (Engine Dies Going Down Hill) ..... T-55
42. Turbocharger Boost Pressure Low ..... T-24
43. Turbocharger Leaks (Engine Oil or Fuel) ..... T-25
44. Turbocharger Noise ..... T-23

# Troubleshooting Charts

## (By System)

Page No.

**Cooling System**

Coolant Temperature Above Normal ..... T-6
Coolant Temperature Below Normal ..... T-9
Coolant Loss ..... T-10
Fuel In Coolant ..... T-12
Lubricating Or Hydraulic Oil In the Coolant ..... T-17

**Oil System**

Fuel In the Lubricating Oil ..... T-22
Coolant In the Lubricating Oil ..... T-21
Lubricating Oil Consumption - Excessive ..... T-18
Lubricating Oil Pressure - High ..... T-15
Lubricating Oil Pressure - Low ..... T-13
Lubricating Oil Sludge In the Crankcase - Excessive ..... T-20
Lubricating Oil Temperature Above Normal ..... T-16

**Combustion Air System**

Turbocharger Boost Pressure - Low ..... T-24
Turbocharger Leaks (Engine Oil Or Fuel) ..... T-25
Turbocharger Noise ..... T-23

**Compressed Air System**

Air Compressor Operates With Excessive Noise ..... T-31
Air Compressor Pumping Excessive Lubricating Oil Into the Air System ..... T-28
Air Compressor Slow Air Pressure Rise ..... T-26
Air Compressor Will Not Maintain Adequate Air Pressure But Not Pumping Continuously ..... T-27
Air Compressor Will Not Pump ..... T-29
Air Compressor Will Not Stop Pumping ..... T-30
Engine Will Not Crank Or Cranks Slowly (Air Starter) ..... T-57

# Troubleshooting Charts (Continued)

## (By System)

Page No.

**Fuel System**

Engine Cranks, But Will Not Start (No Exhaust Smoke) ..... T-32
Engine Decelerates Poorly ..... T-52
Engine Hard To Start, Or Will Not Start (Exhaust Smoke Present) ..... T-34
Engine Power Output Low ..... T-44
Engine Runs Rough Or Misfiring - In Operating Range (Warm Engine) ..... T-38
Engine Starts, But Will Not Keep Running ..... T-36
Engine Surges At High Idle ..... T-54
Engine Surges At Low Idle ..... T-42
Engine Surges While Operating At Rated RPM and Load ..... T-53
Engine Will Not Reach Rated Speed When Loaded ..... T-43
Engine Will Not Shut Off ..... T-51
Exhaust Smoke Under Load - Excessive ..... T-50
Fuel Consumption - Excessive ..... T-56
Exhaust Smoke At Idle - Excessive (Warm Engine) ..... T-66
Idle - Rough ..... T-40
Throttle Response Slow (Engine Dies Going Downhill) ..... T-55

**Electrical System**

Alternator Malfunctioning ..... T-60
Engine Will Not Crank or Cranks Slowly (Electrical Starter) ..... T-68

**Base Engine Components**

Excessive Crankcase Gases (Blow-By) ..... T-61
Engine Vibration - Excessive ..... T-62
Engine Noise - Diagnostic Procedure ..... T-63
Engine Noise - Excessive ..... T-64

## Coolant Temperature Above Normal

| Cause | Corrections |
|---|---|
| Coolant Level Low | Check level. Refer to manufacturer for specification. |
| OK | |
| Intake Air Temperature Too High | Disconnect underhood air. Check for air recirculation from radiator entering air cleaner. |
| OK | |
| Radiator Fins Obstructed or Damaged | Check fins for damage and debris. Check radiator shutter operation (refer to manufacturer). |
| OK | |
| Radiator Hose Collapsed | Check hoses. Replace hose if damaged. |
| OK | |
| Fan Shroud Damaged | Check shroud. Repair/replace (refer to manufacturer). |
| OK | |
| Fan Belt Slipping or Viscous Fan Malfunction | Check fan rpm, refer to Procedure 01-25. To replace belt, refer to Procedure 01-23. |
| OK | |
| Radiator Cap Malfunction (Engine at High Altitude) | Check/replace radiator cap. Refer to Procedure 01-15. |
| OK | |
| Temperature Gauge Malfunction | Check/replace gauge. |
| OK | |

(Continued)

## Coolant Temperature Above Normal (Continued)

| Cause | Corrections |
|---|---|
| Radiator Shutters Are Not Opening Completely or Cold Weather Radiator Cover Closed | Check shutter operation, refer to Procedure 01-20. |
| OK | |
| Fan Clutch Malfunction (Clutch Disengaged) | Check sensor, refer to Procedure 01-24. |
| OK | |
| DCA Concentration Too High | To check, refer to Procedure 01-02. |
| OK | |
| Air in the Cooling System | To check, refer to Procedure 01-11. |
| OK | |
| Thermostat Malfunction | Check operation, refer to Procedure 01-32. To replace thermostat, refer to Procedure 01-33. |
| OK | |
| Radiator Core Obstructed or Damaged | To check, refer to Procedure 01-19. Refer to manufacturer for repair/replacement instructions. |
| OK | |
| Water Pump Malfunction | To check, refer to Procedure 01-29. To replace water pump, refer to Procedure 01-30. |
| OK | |
| Engine is Receiving Too Much Fuel | To check, refer to Procedure 05-06 or 05-06. To adjust, refer to Procedure 05-07. |
| OK | |
| Equipment Cooling System Not Designed to Operate Continuously In High Ambient Temperature | Contact equipment manufacturer for optional radiator and fan. |

## Coolant Temperature Below Normal

| Cause | Corrections |
|---|---|
| Continuously Operating in Low Ambient Temperature | Refer to Bulletin No. 3387266-R (Cold Weather Operation). |
| OK | |
| Radiator Shutters Stuck in Open Position | Check/repair/replace (refer to manufacturer). |
| OK | |
| Temperature Gauge Malfunction | Check/replace gauge |
| OK | |
| Fan Clutch Malfunction (Continuous Operation) | Refer to Procedure 01-24 |
| OK | |
| Thermostat/Thermostat Seal Malfunction | Check operation, refer to Procedure 01-32. To replace thermostat and seal, refer to Procedure 01-33. |
| OK | |
| Radiator Baffle Leaking | Check, refer to Procedure 01-17. Repair/replace, refer to manufacturer. |
| OK | |
| Reverse Flow Through Radiator | To check, refer to Procedure 01-18 |

## Coolant Loss

| Cause | Corrections |
|---|---|
| External Leak | Check/repair hose clamps, hoses, draincocks, expansion plugs, pipe plugs, gasket locations. To pressure test the cooling system, refer to Procedure 01-12. |
| OK | |
| Engine Overheating | Refer to ''Coolant Temperature Above Normal'' Chart. |
| OK | |
| Coolant Level High | Check level. Refer to manufacturer for specification. |
| OK | |
| Reverse Flow in Radiator | To check, refer to Procedure 01-18. |
| OK | |
| Radiator Cap Malfunction | Check/replace radiator cap. Refer to Procedure 01-15. |
| OK | |
| Internal Leak (Coolant in Oil) | Refer to ''Coolant in the Oil'' Chart. |
| OK | |
| Internal Leak (Coolant Not in Oil) | Pressurize cooling system, refer to Procedure 01-12. Check the aftercooler, air compressor, and cylinder head. |
| OK | |
| Combustion Gases Entering the Cooling System | To check, refer to Procedure 01-11. To replace the head gasket, refer to Procedure 07-14. |
| OK | |
| Coolant Fill Line Restricted or Obstructed | To check, refer to Procedure 01-18. Repair/replace fill line. |

## Fuel In Coolant

| Cause | Corrections |
|---|---|
| Bulk Coolant Supply Contaminated | Check coolant supply. Drain coolant and replace with non-contaminated coolant. |
| OK | |
| Fuel Heater Malfunction | Replace the fuel heater. Refer to the manufacturer's recommendations. |
| OK | |
| Cylinder Head Cracked | Pressurize cooling system, refer to Procedure 01-12. To replace the cylinder head, refer to Procedure 07-14. |

## Lubricating Oil Pressure Low

| Cause | Corrections |
|---|---|
| Incorrect Oil Level | Check level, add or drain oil. To check dipstick calibration, refer to Procedure 02-15. |
| OK | |
| Oil Pressure Gauge Malfunction | Check gauge. Replace if necessary. |
| OK | |
| Oil Pressure Sensor Not in Correct Location | Check location, refer to specifications. Relocate sensor, check operation. |
| OK | |
| Oil Diluted With Fuel or Coolant | Refer to the appropriate Troubleshooting Chart. |
| OK | |
| Incorrect Oil for Operating Conditions | Change oil and filters. Use type recommended (15W-40). Check operation. |
| OK | |
| Engine Angularity or Power Angle Exceeding Limits | Check power angle in vehicle. Check terrain where low oil pressure occurs. Refer to specifications. |
| OK | |
| Full Flow Oil Filters Plugged | Replace oil filters, refer to Procedure 02-11. |
| OK | |

(Continued)

## Lubricating Oil Pressure Low (Continued)

| Cause | Corrections |
|---|---|
| Oil Temperature Above Normal - 120°C [250°F] | Refer to the ''Lubricating Oil Temperature Above Normal'' Troubleshooting Chart. |
| OK | |
| Oil Cooler Plugged | Check pressure drop, refer to Procedure 02-19. To replace cooler cores, refer to Procedure 02-22. |
| OK | |
| Oil Suction Tube Broken | Remove oil sump. Inspect/replace suction tube. |
| OK | |
| Oil Pressure Regulator Malfunction | Remove lubricating oil pump, refer to Procedure 02-27. Remove and inspect regulator assembly. |
| OK | |
| Internal Engine Wear or Damage | Use oil analysis and inspect oil filters to find probable damage. Refer to Procedure 02-04. |
| OK | |
| Lubricating Oil Pump Malfunction | Inspect lubricating oil pump, refer to Procedure 02-28. |

## Lubricating Oil Pressure High

| Cause | Corrections |
|---|---|
| Oil Pressure Gauge Malfunction | Check gauge. Replace if necessary. |
| OK | |
| Incorrect Oil for Operating Conditions | Change oil and filters. Use type recommended (15W-40). Check operation. |
| OK | |
| Oil Pressure Sensor Not in Correct Location | Check location, refer to specifications. Relocate sensor. |
| OK | |
| Piston Cooling Regulator Malfunction | Remove oil filter head, refer to Procedure 02-18. Check the piston cooling regulator. |
| OK | |
| Oil Pressure Regulator Malfunction | Remove lubricating oil pump, refer to Procedure 02-27. Inspect/replace regulator assembly. |

## Lubricating Oil Temperature Above Normal

| Cause | Corrections |
|---|---|
| Engine Coolant Temperature Above Normal - 120°C [250°F] | Refer to the "Coolant Temperature Above Normal" Troubleshooting Chart. |
| OK | |
| Oil Temperature Gauge Malfunction | Check/replace gauge. |
| OK | |
| Lubricating Oil Cooler Malfunction | To replace coolers, refer to Procedure 02-22. |

## Lubricating Or Hydraulic Oil In The Coolant

| Cause | Corrections |
|---|---|
| Bulk Coolant Supply Contaminated | Check coolant supply. Drain coolant and replace with non-contaminated coolant. |
| OK | |
| Lubricating Oil Cooler | Remove and inspect oil cooler cores, refer to Procedure 02-22. |
| OK | |
| Hydraulic Oil Cooler | Remove and inspect hydraulic oil cooler cores and o-rings. Refer to Procedure 02-21. |
| OK | |
| Cylinder Head Gasket | Replace head gasket, refer to Procedure 07-14. |
| OK | |
| Cylinder Head Cracked or Porous | Remove cylinder head, refer to Procedure 07-14. Check oil passages. |
| OK | |
| Cylinder Block Cracked or Porous | Inspect cylinder block, refer to Procedure 01-12 or 02-06. |

## Lubricating Oil Consumption Excessive

| Cause | Corrections |
|---|---|
| External Oil Leaks | Check engine. Pressurize lube system if necessary, refer to Procedure 02-06. |
| OK | |
| Crankcase Breather or Breather Tube Plugged | Check breather and tube. Refer to Procedure 02-13. |
| OK | |
| Incorrect Oil Level | Check level. To check dipstick calibration, refer to Procedure 02-15. |
| OK | |
| Incorrect Oil for Operating Conditions | Change oil and filters. Use type recommended (15W-40). Check operation. |
| OK | |
| Operating Temperature Too Low | Refer to the ‘‘Coolant Temperature Too Low’’ Troubleshooting Chart. |
| OK | |
| Oil Diluted With Fuel | Refer to the ‘‘Fuel in the Lubricating Oil’’ Troubleshooting Chart. |
| OK | |
| Air Compressor Pumping Oil | To check, refer to Procedure 04-09. Refer to the ‘‘Air Compressor Pumping Oil’’ Troubleshooting Chart. |
| OK | |
| Turbocharger Seal Leakage | To check, refer to Procedure 03-5. |
| OK | |

(Continued)

## Lubricating Oil Consumption Excessive (Continued)

| Cause | Corrections |
|---|---|
| Engine Blow-by Excessive | To check, refer to Procedure 07-03 Refer to the ‘‘Excessive Crankcase Gases (Blow-by)’’ Troubleshooting Chart. |
| OK | |
| Piston/Piston Ring/Cylinder Liner Malfunction | To check, refer to Procedure 07-13. To replace piston rings, refer to Procedure 07-24. |

## Lubricating Oil Sludge In The Engine Crankcase Excessive

| Cause | Corrections |
|---|---|
| Bulk Oil Supply Contaminated | Check bulk oil supply. Change engine oil and filters. |
| OK | |
| Incorrect Oil for Operating Conditions | Change oil and filters. Use type recommended (15W-40). Check operation. |
| OK | |
| Incorrect Oil Drain Interval | Check records, compare to specifications. |
| OK | |
| Incorrect Oil Filter Replacement Interval | Check records, compare to specifications. |
| OK | |
| Incorrect Fuel Grade or Poor Quality Fuel | Check fuel and compare to specifications. Inspect/replace fuel filters and fuel. |
| OK | |
| Engine Coolant and Oil Temperature Too Low | Refer to the ‘‘Coolant Temperature Below Normal’’ Troubleshooting Chart. |
| OK | |
| Coolant in the Oil | Refer to the ‘‘Coolant in the Lubricating Oil’’ Troubleshooting Chart. |
| OK | |
| Crankcase Breathers or Breather Tubes Plugged | Check breathers and tubes, refer to Procedure 02-13. |

## Coolant In The Lubricating Oil

| Cause | Corrections |
|---|---|
| Cylinder Head Gasket Leaking | To check, refer to Procedure 07-12. To replace gasket, refer to Procedure 07-14. |
| OK | |
| Cylinder Liner Porous or Coolant Leaking By the Packing Rings | Drain oil. Remove the oil pan. Pressure test the cooling system, refer to Procedure 01-12. |
| OK | |
| Lubricating, Oil Cooler Malfunction | Remove oil cooler cover and cores, refer to Procedure 02-22. Check cover gasket for damage. Pressure test core, refer to Procedure 02-23. |
| OK | |
| Cylinder Head Cracked or Porous | Remove cylinder head, refer to Procedure 07-14. Pressure test to check, refer to Procedure 07-16. |
| OK | |
| Cracked or Porous Cylinder Block | Pressure test cooling system, refer to Procedure 01-12. |

## Fuel In The Lubricating Oil

| Cause | Corrections |
|---|---|
| Bulk Oil Supply Contaminated | Check oil supply. Drain oil and replace with non-contaminated oil. |
| OK | |
| Low Oil and Coolant Temperature Caused By Long Periods of Engine Idling | Shorten idle period or raise idle speed to increase temperature. To adjust idle speed, refer to Procedure 05-05. |
| OK | |
| Top Injector O-ring Damaged | Check for fuel leakage, refer to Procedure 05-22. To replace the injector o-ring, refer to Procedure 05-09. |
| OK | |
| Injector Damage or Malfunction | Replace injector, refer to Procedure 05-09. |
| OK | |
| Fuel Pump Main Shaft Seals Leaking | Replace fuel pump. Refer to Procedure 05-11. |
| OK | |
| Cylinder Head Cracked or Porous | Replace cylinder head, refer to Procedure 07-14. |

## Turbocharger Noise

| Cause | Corrections |
|---|---|
| Incorrect Turbocharger Installed | Refer to CPL Manual for specification. |
| OK | |
| Intake Air Leaks | Check for loose/damaged/porous piping and connections. |
| OK | |
| Exhaust Air Leaks | Check for loose at damaged exhaust piping and connections. |
| OK | |
| Excessive Intake Air Restriction | To check, refer to Procedure 03-08. Clean or replace air filter element or damaged intake piping. |
| OK | |
| Excessive Exhaust Air Restriction | To check, refer to Procedure 03-09. Replace damaged exhaust system components. |
| OK | |
| Turbocharger Damage | Remove intake and exhaust piping from turbocharger. Check turbocharger, refer to Procedure 03-12 or 03-11. To replace turbocharger, refer to Procedure 03-14, or 03-13. |

## Turbocharger Boost Pressure Low

| Cause | Corrections |
|---|---|
| Incorrect Turbocharger Installed | Refer to CPL Manual for specification |
| OK | |
| Intake or Exhaust Air Leaks | Check for loose or damaged piping and connections. Check turbocharger and exhaust manifold mounting. Refer to Procedure 03-10. |
| OK | |
| Excessive Intake Air Restriction | Check restriction, refer to Procedure 03-08. Clean or replace air filter element or damaged air intake piping. |
| OK | |
| Excessive Exhaust Air Restriction | Check restriction, refer to Procedure 03-09. Replace damaged piping/parts. |
| OK | |
| Turbocharger Damage | Remove intake and exhaust piping from turbocharger. Check turbocharger, refer to Procedure 03-12. To replace refer to Procedure 03-14 or 03-13. |
| OK | |
| Air Compressor Connection Loose or Damaged | Check connection between manifold and air compressor. Repair/replace as necessary. |
| OK | |
| Fuel System Malfunction | Refer to the "Low Power" Troubleshooting Chart. |
| OK | |
| Aftercooler Core Plugged | Check aftercooler core for coolant leak, refer to Procedure 03-19. |

## Turbocharger Leaks (Engine Oil or Fuel)

| Cause | Corrections |
|---|---|
| Turbocharger Turbine Seal Leak | To check, refer to Procedure 03-05. To replace turbocharger, refer to Procedure 03-14, or 03-13. |
| OK | |
| Excessive Engine Crankcase Gases (Blowby) | To check, refer to Procedure 07-03. To determine cause, refer to the ''Excessive Crankcase Gases (Blowby)'' Troubleshooting Chart. |
| OK | |
| Excessive Operation at Engine Idle (Fuel Leak) | Decrease idle period or increase idle rpm to increase temperature. To adjust idle speed, refer to Procedure 05-05. |
| OK | |
| Cylinder Cut-Out Valve Malfunction (Fuel Leak) | Repair/replace cut-out valve. |

## Air Compressor Slow Air Pressure Rise

| Cause | Corrections |
|---|---|
| Excessive Intake Air Restriction to Air Compressor | Replace air compressor air cleaner (if installed). Check engine intake air restriction if air compressor inlet is installed in intake piping between air cleaner and turbocharger. |
| OK | |
| Air System Leaks | Check for leaks. Tighten fittings or replace failed parts. |
| OK | |
| Safety Pressure Valve Incorrect or Installed in Wrong Location | Check rating, must be 150 psi. Check location, move if located near air compressor outlet. |
| OK | |
| Excessive Carbon Buildup in the Air Discharge Line | To check carbon buildup, refer to Procedure 04-05. To replace air compressor head, refer to Procedure 04-14. To replace discharge line, refer to equipment manufacturer. |
| OK | |
| Air System Component is Malfunctioning | Check operation of check valves, alcohol evaporators, air driers, etc. Refer to the manufacturer's instructions. |
| OK | |
| Air Compressor Unloader Valve Assembly Malfunction | Check unloader operation, refer to Procedure 04-11. To replace unloader valve assembly, refer to Procedure 04-16. |
| OK | |
| Air Compressor Intake or Exhaust Valve Leaks Air | To check, refer to Procedure 04-06. To rebuild air compressor head, refer to Procedure 04-13. To replace air compressor head, refer to Procedure 04-14. |

## Air Compressor Will Not Maintain Adequate Air Pressure (Not Pumping Continuously)

| Cause | Corrections |
|---|---|
| Excessive Air System Leaks | Check for leaks. Tighten fittings or replace failed parts. |
| OK | |
| Air Governor Malfunction or Not Set to Correct Value | To check, refer to Procedure 04-08. Repair/replace as necessary. |
| OK | |
| In-line Check Valve Malfunction | Remove and inspect the valve. Clean or replace as necessary. |

## Air Compressor Pumping Excessive Lubricating Oil

| Cause | Corrections |
|---|---|
| Excessive Intake Air Restriction to Air Compressor | Replace air compressor air cleaner (if installed). Check engine intake restriction if air compressor inlet is installed in intake piping between air cleaner and turbocharger. |
| OK | |
| Engine Power Angle or Angularity During Operation Exceeds 10° | Install external drain from air compressor sump to oil pan. |
| OK | |
| Oil Level in Air Compressor Sump Too High | External oil drain blocked. Repair/ replace as necessary. |
| OK | |
| Excessive Operating Time in Unloaded Condition | Cycle Air Compressor to seat piston rings. Check again. Refer to Procedure 04-09. |
| OK | |
| Internal Wear or Damage | To check amount of oil, refer to Procedure 04-09. To replace air compressor, refer to Procedure 04-15 or 04-16. |

## Air Compressor Will Not Pump

| Cause | Corrections |
|---|---|
| Air Governor Malfunction or Not Set to Correct Value | To check, refer to Procedure 04-08. Repair/replace as necessary. |
| OK | |
| Air Compressor Unloader Valve Assembly Malfunction | To check, refer to Procedure 04-11. To replace the unloader assembly, refer to Procedure 04-16. |
| OK | |
| Internal Damage | Replace air compressor, refer to Procedure 04-15 or 04-16. |

## Air Compressor Will Not Stop Pumping

| Cause | Corrections |
|---|---|
| Air System Leaks | Check for leaks. Tighten fittings or replace failed parts. |
| OK | |
| Air Dryer Automatic Drain Stuck or Frozen Open | Refer to the manufacturer's instructions. |
| OK | |
| Air Governor Malfunction or Set to Wrong Value | To check, refer to Procedure 04-07. Repair/replace as necessary. |
| OK | |
| Air Compressor Unloader Valve Assembly Leaks | To check, refer to Procedure 04-11. To replace unloader assembly, refer to Procedure 04-16. |
| OK | |
| Air Compressor Valve or Valve Spring Malfunction | To rebuild the air compressor head, refer to Procedure 04-17. To replace the air compressor head, refer to Procedure 04-14. |
| OK | |
| Wrong Air Compressor Unloader Valve Spring | Check and compare to specifications. Refer to Procedure 04-02. |

## Air Compressor Noise Excessive

| Cause | Corrections |
|---|---|
| Excessive Carbon Buildup in the Air Compressor | To check, refer to Procedure 04-05. To replace air compressor head, refer to Procedure 04-14. To replace air discharge line(s), refer to equipment manufacturer. |
| OK | |
| Unloader Valve Malfunction | Check operation, refer to Procedure 04-11. |
| OK | |
| Drive Coupling Excessively Worn | Remove air compressor, refer to Procedure 04-15 or 04-16. Inspect outer coupling and coupling half on both air compressor and accessory drive. Refer to Procedure 04-17. |
| OK | |
| Internal Wear or Damage | Replace air compressor, refer to Procedure 04-15 or 04-16. |

## Engine Cranks But Will Not Start (No Smoke From Exhaust)

| Cause | Corrections |
|---|---|
| No Fuel in Tank | Add fuel |
| OK | |
| Starting Motor Rotation Incorrect | Check direction of crankshaft rotation. Replace starting motor, refer to Procedure 06-11. |
| OK | |
| Shut-off Valve Closed | Use manual override. Replace or repair electrical problem, refer to Procedure 05-16. |
| OK | |
| Auxiliary Shut Down Device (Skinner Valve) Closed | Repair or replace. Refer to manufacturer's instructions. |
| OK | |
| Engine Governor Malfunction or Installed Wrong | Refer to the Manufacturer's instructions. |
| OK | |
| No Fuel to Injectors | Prime fuel pump. Check operation, refer to Procedure 05-17. |
| OK | |
| Fuel Connection Loose on Suction Side of Pump | Tighten all fuel fittings and connections from fuel tank to fuel pump. |
| OK | |
| Fuel Pump Not Turning | Check tachometer shaft for rotation. To replace the fuel pump, refer to Procedure 05-11. |
| OK | |

(Continued)

## Engine Cranks But Will Not Start (No Smoke From Exhaust) (Continued)

| Cause | Corrections |
|---|---|
| Fuel Pump Gear Shaft Broken | Check suction of gear pump, refer to Procedure 05-18. To replace the fuel pump, refer to Procedure 05-11. |
| OK | |
| Fuel Filter or Suction Line Plugged | Replace fuel filters. Refer to Procedure 05-13 |
| OK | |
| AFC ‘‘No-Air’’ Screw Adjusted Wrong | Adjust the ‘‘No-Air’’ to specification, refer to Procedure 05-08. |
| OK | |
| In-line Check Valve Installed Backward or Wrong Part Number | Check for correct installation, refer to Procedure 05-02. |
| OK | |
| Fuel Pump Gear Pump Check Valve Stuck Open | Replace the check valve, refer to Procedure 05-14. |
| OK | |
| Gear Pump Worn | Replace the fuel pump, refer to Procedure 05-11. |
| OK | |
| Excessive Exhaust Air Restriction | Replace damaged exhaust system components. |

## Engine Hard To Start Or Will Not Start (Exhaust Smoke Present)

| Cause | Corrections |
|---|---|
| Engine Cranking Speed Too Slow | Refer to the ''Engine Will Not Crank or Cranks Slowly'' Troubleshooting Chart. |
| OK | |
| Cold Start Aid Needed or Not Working Properly | Refer to the ''Cold Climate Service'', Bulletin, No. 3379009. |
| OK | |
| Fuel Filter Plugged | Replace filters |
| OK | |
| Air in Fuel | To check for air in the fuel, refer to Procedure 05-19. Tighten all connections between the fuel tank and fuel pump. |
| OK | |
| Excessive Fuel Inlet Restriction | To check, refer to Procedure 05-23. Replace/clean suction line as necessary. |
| OK | |
| Incorrect Fuel Grade or Poor Quality Fuel | Start engine from a temporary supply tank with high quality fuel. Replace fuel and fuel filters. |
| OK | |
| Idle Speed Set Too Low | Adjust idle speed. Refer to Procedure 05-05. |
| OK | |
| AFC ''No-Air'' Screw Adjusted Wrong | Check/adjust the AFC No-Air Setting. Refer to Procedure 05-08. |
| OK | |
| Incorrect Engine Parts Replacement/Adjustment | Check injection timing, refer to Procedure 07-20. Check pistons for correct compression ratio. To replace, refer to Procedure 07-24. |

## Engine Starts But Will Not Keep Running

| Cause | Corrections |
|---|---|
| Electrical System Malfunction Causing Shutoff Valve to Close | Use the manual override to check, refer to Procedure 05-16. Repair the electrical system, refer to manufacturer's instructions. |
| OK | |
| Air in Fuel | To check for air, refer to Procedure 05-19. Tighten all fittings between fuel pump and fuel tank. |
| OK | |
| Fuel Filter Plugged | Replace fuel filters. |
| OK | |
| Fuel Inlet Restriction Excessive | To check, refer to Procedure 05-23. Replace damaged fuel line. |
| OK | |
| Incorrect Fuel Grade or Poor Quality Fuel | Check fuel and compare to specifications. Operate engine from a temporary supply tank with high quality fuel. Check operation, replace fuel and filters as necessary. |
| OK | |
| Idle Speed Low | Adjust to specification, refer to Procedure 05-06. |
| OK | |
| AFC ''No-Air'' Screw Adjusted Wrong | Adjust to specification, refer to Procedure 05-08. |
| OK | |
| Excessive Intake Air Restriction | To check restriction, refer to Procedure 03-08. Clean/replace air filter element or damaged air intake piping. |
| OK | |

(Continued)

## Engine Starts But Will Not Keep Running (Continued)

| Cause | Corrections |
|---|---|
| Excessive Exhaust Air Restriction | Check restriction, refer to Procedure 03-09. Replace damaged exhaust system components. |
| OK | |
| Jacobs Engine Brake Adjusted Wrong | Adjust to specification. Refer to the K19 Shop Manual. |

## Engine Runs Rough Or Misfires (Warm Engine)

| Cause | Corrections |
|---|---|
| Air in Fuel | To check for air, refer to Procedure 05-19. Tighten all fittings between fuel pump and tank. |
| OK | |
| Jacobs Engine Brake Adjusted Wrong | Adjust to specification. Refer to the K19 Shop Manual. |
| OK | |
| Incorrect Fuel Grade or Poor Quality Fuel | Check fuel and compare to specifications. Operate engine from a temporary supply tank with high quality fuel, check operation. Replace fuel and filters as necessary. |
| OK | |
| Push Rods, Rocker Levers, Crossheads, or Cam Followers Bent, Broken, or Not in Location. | Remove valve cover and inspect components. Replace damaged parts. |
| OK | |
| Valve and Injectors Adjusted Wrong | Check and adjust valve and injector settings, refer to Procedure 07-05. |
| OK | |
| STC Tappet Malfunction | Replace Tappet. Refer to Procedure 05-09. |
| OK | |
| Injector Loose or Malfunctioning | Tighten hold down capscrews or Replace Injector, refer to Procedure 05-09. |
| OK | |
| Camshaft Damaged | Remove cam follower covers, inspect lobe on camshaft. To replace camshaft, refer to Procedure 07-48. |
| OK | |
| Injection Timing Set Wrong | Check timing, refer to Procedure 07-20. Adjust by changing the camshaft key. |
| OK | |

(Continued)

## Engine Runs Rough or Misfires (Warm Engine) (Continued)

| Cause | Corrections |
| --- | --- |
| Exhaust or Intake Valve Leakage | Replace cylinder head. Refer to Procedure 07-14. |

## Idle Rough

| Cause | Corrections |
|---|---|
| Engine Idle Speed Low | Adjust to specification, refer to Procedure 05-05. |
| OK | |
| Air in Fuel | To check for air, refer to Procedure 05-19. Tighten all connections between the fuel tank and fuel pump. |
| OK | |
| Incorrect Fuel Grade or Poor Quality Fuel | Check fuel and compare to specifications. Operate engine on a temporary supply tank with high quality fuel. Check operation, replace fuel and fuel filters as necessary. |
| OK | |
| Injector Adjusted Wrong or Push Rod Broken | Check/adjust injector and valve setting, refer to Procedure 07-05. |
| OK | |
| Injector or Tappet Malfunction | Isolate faulty injector, refer to Procedure 05-21. To replace the injector, refer to Procedure 05-09. |
| OK | |
| Fuel Pump Malfunction | Replace fuel pump, refer to Procedure 05-11. |
| OK | |
| Injection Timing Wrong | Check injection timing, refer to Procedure 07-20. Adjust by changing the camshaft key. |
| OK | |
| Engine Mounts Worn or Damaged | Check mounts, refer to Procedure 09-04 or the manufacturer's specifications. |
| OK | |
| Valves Damaged or Worn | Isolate faulty cylinder head. Replace the cylinder head, refer to Procedure 07-14. |

## Engine Surges At Low Idle

| Cause | Corrections |
|---|---|
| Air in Fuel | Check for air, refer to Procedure 05-19. Tighten all fittings and connections between the fuel pump and the fuel tank. |
| OK | |
| Engine Idle Speed Set Too Low | Adjust idle rpm to specification, refer to Procedure 05-05. |
| OK | |
| Auxiliary (Non-PT) Engine Governor Idle Setting Too Low | Adjust idle rpm above engine fuel pump idle setting. Refer to manufacturer. |
| OK | |
| Fuel Drain Lines Restricted | Check restriction, refer to Procedure 05-24. Replace/reroute fuel lines. |
| OK | |
| Fuel Filter or Suction Line Plugged | Replace fuel filters. To check restriction, refer to Procedure 05-23. Replace/clean suction line as necessary. |
| OK | |
| Injector Malfunction | To isolate faulty injector, refer to Procedure 05-21. To replace the injector, refer to Procedure 05-09. |
| OK | |
| Fuel Pump Malfunction | Replace fuel pump, refer to Procedure 05-11. |
| OK | |
| Fuel Drain in Cylinder Head Blocked | Remove fuel manifold, refer to Procedure 05-33. Remove injectors, refer to Procedure 05-09. Clean fuel passage. |

## Engine Will Not Reach Rated RPM When Loaded

| Cause | Corrections |
|---|---|
| Engine Overloaded | Reduce load. |
| OK | |
| Tachometer Not Correct | Check gauge. |
| OK | |
| Throttle Linkage Adjustment Wrong | Check for full throttle travel. Refer to Procedure 05-12. |
| OK | |
| Fuel Filter or Suction Line Plugged | Replace fuel filters. To check restriction, refer to Procedure 05-23. Clean/replace suction line as necessary. |
| OK | |
| Engine Power Low | Refer to the ‘‘Engine Power Output Low’’ Troubleshooting Chart. |

## Engine Power Output Low

| Cause | Corrections |
|---|---|
| Interview Operator | Refer to Procedure 05-31 and the "Low Power Checklist" at the end of Section 5. Perform checks indicated in this troubleshooting chart based on interview results and type of application. |
| OK | |
| High Fuel Temperature (Above 43°C [110°F]) | Fill fuel tanks or turn off fuel heater. Refer to "Fuel for Cummins Engines," Bulletin No. 3379001 for specifications. |
| OK | |
| Incorrect Fuel Grade of Poor Quality Fuel | Check fuel and compare to specifications. Operate engine from a temporary supply tank with high quality fuel, check engine operation. Replace fuel and filters as necessary. |
| OK | |
| Throttle Lever, Return Spring, or Linkage Damaged or Adjusted Wrong | Check operation, refer to Procedure 05-12. |
| OK | |
| Lubricating Oil Level Too High | Check oil level. To check dipstick calibration, refer to Procedure 02-15. |
| OK | |
| Engine Operating Above Recommended Altitude | Derate engine for altitude. Refer to engine data sheet for specification, Bulletin No. 3381194. |
| OK | |
| High Intake Air Temperature (Above 38°C [100°F]) | Use outside air to turbocharger in warm weather. |
| OK | |

(Continued)

## Engine Power Output Low (Continued)

| Cause | Corrections |
|---|---|
| Low Intake Air Temperature (Below 0°C [32°F]) | Use inside air to turbocharger in cold weather. |
| OK | |
| Air or Exhaust Leaks Between Turbo-charger and Engine | Check for leaks. Repair or replace malfunctioning parts. |
| OK | |
| Tachometer or Speedometer Not Correct | Check operation with calibrated tachometer. |
| OK | |
| Fuel Filter Plugged | Replace fuel filters. |
| OK | |
| AFC Plunger Not Fully Open | Check AFC air tube and fuel drain lines for restriction. To check AFC operation, refer to Procedure 05-20. To replace fuel pump, refer to Procedure 05-11. |
| OK | |
| Air in Fuel (Spongy Throttle) | Check for air, refer to Procedure 05-19. Tighten all fittings between fuel pump and fuel tank. |
| OK | |
| Valves or Injectors Adjusted Wrong | Check/adjust valves and injectors, refer to Procedure 07-05. |
| OK | |

(Continued)

## Engine Power Output Low (Continued)

| Cause | Corrections |
|---|---|
| STC Tappet Assembled Upside Down | Check and correct. Refer to Procedure 05-09. |

OK

| | |
|---|---|
| Check the Application Specific Problems | Refer to the Construction, Genset, or Marine Section below. |

## Application Specific Problem - Construction

| Cause | Corrections |
|---|---|
| Fuel or Air Delivery Problem | Perform Stall Speed and Time to Stall Check, refer to Procedure 05-32. Measure Intake Manifold Pressure, Fuel Rate, and Fuel Pressure. Refer to Procedure 05-06. Refer to the Performance Measurement Section following the Application Specific Problems. |

## Application Specific Problem - Genset

| Cause | Corrections |
|---|---|
| Electrical Load Measurement Not Correct | Verify electrical load with calibrated equipment. |

OK

| | |
|---|---|
| Auxiliary Governor Throttle Linkage Not Set Correctly | Refer to the Manufacturer's Instructions. |

OK

| | |
|---|---|
| EFC or United Technology's Governor Actuator Not Fully Open | Check operation. Refer to the manufacturer's instructions. |

OK

(Continued)

## Engine Power Output Low (Continued)

| Cause | Corrections |
|---|---|
| Battery Voltage Low (Normally Closed EFC and United Technology Governors Only) | Check the battery charging system. Refer to the "Alternator Malfunctioning" Trouble-shooting Chart. |
| OK | |
| Fuel or Air Delivery Problem | Operate engine at full load. Measure fuel rate, pressure, and intake manifold pressure. Refer to Procedure 05-06. Refer to the Performance Measurement Section following the Application Specific Problems. |

## Application Specific Problem - Marine

| Cause | Corrections |
|---|---|
| High Idle RPM Too Low | Adjust idle setting, refer to Procedure 05-05. |
| OK | |
| Propeller Damaged or Not Correct Pitch | Check/replace. Refer to manufacturer's recommendations. |
| OK | |
| Propeller Shaft Packing Too Tight | Refer to manufacturers instructions. |
| OK | |
| Propeller Shaft Bent | Replace shaft. Refer to manufacturer's instructions. |
| OK | |
| Hull Dirty or Absorbing Water (Wood Hull Only) | Clean Hull. Refer to manufacturers instructions. |
| OK | |
| Fuel or Air Delivery Problem | Perform Sea Trial and measure intake manifold pressure, fuel rate, and fuel pres-sure. Refer to Procedure 05-06. Refer to the Performance Measurement Section following the Application Specific Problems. |

## Performance Measurement

| Cause | Corrections |
|---|---|
| Fuel or Air Delivery Problem | Perform the following measurements to determine the problem. Repair/Replace based on the measurements. |
| OK | |
| Excessive Intake Air Restriction | To check restriction, refer to Procedure 03-08. Clean/replace air filter element or damaged air intake piping. |
| OK | |
| STC Operation in Advanced Mode Only | Check and correct. Refer to Procedure 05-09. |
| OK | |
| Fuel Inlet (Suction Line) Restriction Excessive | Check restriction, refer to Procedure 05-23. Replace/clean switch line as required. |
| OK | |
| Fuel Drain Line Restricted (AFC Fuel Pump) | Check drain line restriction, refer to Procedure 05-24. Replace/reroute fuel lines. |
| OK | |
| Fuel Rate OK, Fuel Pressure High, Intake Manifold Pressure OK | Replace injectors. Refer to Procedure 05-09. Check for restrictions in fuel supply line. |
| OK | |
| Fuel Rate Low, Fuel Pressure High, Intake Manifold Pressure OK or Low | Replace injectors, refer to Procedure 05-09. |
| OK | |
| Fuel Rate Low, Fuel Pressure OK, Intake Manifold Pressure High | Replace turbocharger, refer to Procedure 03-14 or 03-13. |
| OK | |
| Fuel Rate Low, Fuel Pressure OK, Intake Manifold Pressure Low | Replace injectors, refer to Procedure 05-09. |
| OK | |

(Continued)

## Performance Measurement

| Cause | Corrections |
|---|---|
| Fuel Rate OK, Fuel Pressure OK, Intake Manifold Pressure Low | Replace turbocharger, refer to Procedure 03-14 or 03-13. |
| OK | |
| Fuel Rate Low, Fuel Pressure Low, Intake Manifold Pressure Low | Adjust Fuel Pressure (Rate). Refer to Procedure 05-07. |
| OK | |
| Excessive Engine Wear | Rebuild engine. |

## Exhaust Smoke Excessive Under Load

| Cause | Corrections |
|---|---|
| Excessive Intake Air Restriction | To check restriction, refer to Procedure 03-08. Clean/replace air filter element or damaged air intake piping. |
| OK | |
| Exhaust Leak | Check turbocharger mounting and exhaust manifold mounting. Tighten connections or replace damaged parts. |
| OK | |
| Intake Air Leak Between Turbocharger and Cylinder Head | Check for air leak. Repair or replace damaged parts. |
| OK | |
| Incorrect Fuel Grade or Poor Quality Fuel | Check fuel and compare to specifications. Operate engine from a temporary supply tank with high quality fuel. Check operation, replace fuel and filters as necessary. |
| OK | |
| Valves or Injectors Adjusted Wrong | Check/adjust valves and injectors, refer to Procedure 07-05. |
| OK | |
| Engine is Receiving Too Much Fuel or Too Little Air | Check intake manifold pressure, fuel pressure, and rate. Refer to Procedure 05-06. Adjust fuel rate (refer to Procedure 05-07) or refer to the ''Low Turbocharger Boost Pressure'' Troubleshooting Chart. |
| OK | |
| Piston, Piston Ring, or Cylinder Liner Malfunction (Blue Smoke) | To check, refer to Procedure 07-13. To replace piston rings, refer to Procedure 07-24. |

## Engine Will Not Shut Off

| Cause | Corrections |
|---|---|
| Fuel Pump Manual Override Open | Check to be sure the manual override screw is out to maximum travel. |
| OK | |
| Fuel Pump Shut-off Valve Malfunction or Auxiliary Shut-off Valve Malfunction | Check operation, refer to Procedure 05-16. |
| OK | |
| Fuel Tank Vents Plugged | Remove, clean, replace as necessary. |
| OK | |
| Fuel Drain Line Restricted or Check Valve Malfunction | Check restriction, refer to Procedure 05-24. Replace/reroute fuel lines. |
| OK | |
| Engine Running on Fumes Drawn into Air Intake | Locate and isolate the source of the fumes. |
| OK | |
| AFC Bellows Failure and Drain Valve Plugged | Check AFC operation, refer to Procedure 05-20. To replace fuel pump, refer to Procedure 05-11. |
| OK | |
| Injector Malfunction | Replace injectors, refer to Procedure 05-09. |

## Engine Decelerates Poorly

| Cause | Corrections |
|---|---|
| Throttle Lever, Return Spring, or Linkage Damaged or Mis-Adjusted | Check operation adjust or replace damaged parts. |
| OK | |
| Fuel Drain Lines Restricted | Check restriction, refer to Procedure 05-24. Replace/reroute fuel lines. Clean/ replace in-line check valve. |
| OK | |
| Fuel Tank Vents Plugged | Remove and clean/replace as necessary. |
| OK | |
| Injector Check Ball Not Seating or Missing | Remove pump and calibrate on a test stand, refer to Procedure 05-11. |
| OK | |
| Throttle Leakage Excessive | Replace injector, refer to Procedure 05-09. |
| OK | |
| Air Trapped in Fuel Pressure Gauge Line | Bleed gauge. Reroute line if necessary. |

## Engine Surges Under Load

| Cause | Corrections |
|---|---|
| Air in Fuel | Check for air, refer to Procedure 05-19. Tighten all fittings and connections between the fuel pump and the fuel tank. |
| OK | |
| RPM Change Not Measurable (Auxiliary Engine Governor Installed on Engine) | Normal operation for a fast acting governor. Change in engine noise due to load change. |
| OK | |
| Auxiliary (Non-PT) Engine Governor Not in Adjustment or Installed Wrong | Adjust to specification and check installation, refer to manufacturers instructions. |
| OK | |
| Fuel Pump Malfunction | Replace fuel pump, refer to Procedure 05-11. |

## Engine Surges At High Idle

| Cause | Corrections |
|---|---|
| Air In Fuel | Check for air, refer to Procedure 05-19. Tighten all fittings and connections between the fuel pump and the fuel tank. |
| OK | |
| Throttle Linkage Loose or Incorrectly Adjusted | Adjust linkage, refer to Procedure 05-09. |
| OK | |
| Auxiliary (Non-PT) Engine Governor Not in Adjustment | Adjust gain, stability, and droop. Refer to the manufacturers instructions. |
| OK | |
| Engine Fuel Pump Malfunction | Replace fuel pump, refer to Procedure 05-11. |

## Throttle Response Slow (Engine Dies Going Down Hill)

| Cause | Corrections |
|---|---|
| Fuel Pump Governor Overspeeding | Release throttle pressure on downgrades. |
| OK | |
| Throttle Lever/Linkage Malfunction | Check for binding. Adjust if necessary, refer to Procedure 05-12. |
| OK | |
| Air in Fuel | To check, refer to Procedure 05-19. Tighten all fittings between fuel pump and tank. |
| OK | |
| Throttle Leakage Too Low | To replace the fuel pump, refer to Procedure 05-11. |
| OK | |
| AFC Delay | To check, refer to Procedure 05-20. To replace fuel pump, refer to Procedure 05-11. |
| OK | |
| Fuel Pump Malfunction | Replace the fuel pump, refer to Procedure 05-11. |

## Fuel Consumption Excessive

| Cause | Corrections |
|---|---|
| Vehicle Factors | Check tires and driveline for damage or improper operation. |
| OK | |
| External Fuel Leak | Check all fuel lines, fittings, connections, and filters. Repair/replace parts as necessary. |
| OK | |
| Incorrect Oil Level | Check level. To check dipstick calibration, refer to Procedure 02-15. |
| OK | |
| Operator Technique, Vehicle, or Engine Malfunction | Refer to the Fuel Consumption Check List in Section 5. |

## Engine Will Not Crank Or Cranks Slowly (Air Starter)

| Cause | Corrections |
|---|---|
| Incorrect Oil for Operating Conditions | Change oil and filters. Use type recommended (15W-40). Check operation. |
| OK | |
| Oil Temperature Too Low | Install oil pan heater or drain oil and refill with heated oil. |
| OK | |
| Insufficient Air Pressure in Air Tank | Increase pressure using external air supply. |
| OK | |
| Starter Pinion or Ring Gear Damage | Remove starter, refer to Procedure 04-10. Check for damage. |
| OK | |
| Air Starter Malfunction or Incorrect Starter Used | Refer to Manufacturer's instructions. |
| OK | |
| External Conditions Affecting Engine Crankshaft Rotation | Use barring mechanism to rotate crankshaft. Check for and repair drive train damage. |
| OK | |
| Hydraulic Lock in Cylinder | Check intake or exhaust valve operation. |
| OK | |
| Internal Engine Damage | Use oil analysis and inspect filters to locate area of probable damage, refer to Procedure 02-04. Remove oil sump and/or front cover to inspect engine for damage. |

## Engine Will Not Crank Or Cranks Slowly (Electric Starter)

| Cause | Corrections |
|---|---|
| Incorrect Oil for Operating Conditions | Change oil and filters. Use type recommended (15W-40). Check operation. |
| OK | |
| Oil Temperature Too Low | Install oil pan heater or drain oil and refill with heated oil. |
| OK | |
| Battery Rating Too Low | Replace battery with correct rating, refer to Procedure 06-02. |
| OK | |
| Battery Temperature Too Low | Check battery heater operation. Refer to manufacturer's instructions. |
| OK | |
| Battery Cables Incorrect Gauge or Length | Replace cables with larger gauge or shorter length. Refer to Procedure 06-02. |
| OK | |
| Battery Connections Broken, Loose, or Corroded | Check for damage. Clean and tighten if necessary. |
| OK | |
| Battery Charge Low | Check electrolyte level and specific gravity, refer to Procedure 06-05. Recharge/ replace batteries. |
| OK | |
| Starting Circuit Component Malfunction | To check, refer to Procedure 06-06. Replace failed components. |
| OK | |

(Continued)

## Engine Will Not Crank Or Cranks Slowly (Electric Starter) (Continued)

| Cause | Corrections |
|---|---|
| Starter Pinion or Ring Gear Damage | Remove starter, refer to Procedure 06-11. Check for damage. |
| OK | |
| External Conditions Affecting Engine Crankshaft Rotation | Use barring mechanism to rotate crankshaft. Check for and repair drive train damage. |
| OK | |
| Hydraulic Lock in Cylinder | Check intake or exhaust valve operation. |
| OK | |
| Internal Engine Damage | Use oil analysis and inspect filters to locate area of probable damage, refer to Procedure 02-04. Remove oil sump and/or front cover to inspect engine for damage. |

## Alternator Malfunctioning

| Cause | Corrections |
|---|---|
| Defective Gauge | Connect voltmeter to battery terminal to check. |
| OK | |
| Alternator Belt Loose | Check tension, replace and/or tighten belt. Refer to Procedure 06-07. |
| OK | |
| Engine Idle Speed Too Low | Check idle rpm. Adjust to specification. Refer to Procedure 05-05. |
| OK | |
| Voltage Regulator Adjusted Too Low | Check setting. Refer to manufacturers instructions. |
| OK | |
| System Grounding Has Excessive Resistance | Check resistance. Replace Cable. Refer to manufacturers instructions. |
| OK | |
| Battery Temperature Too High | Relocate battery away from heat source |
| OK | |
| Alternator Malfunctions | Check alternator output. Refer to Procedure 06-08. To replace alternator, refer to Procedure 06-09. |

## Crankcase Gases (Blowby) Excessive

| Cause | Corrections |
|---|---|
| Turbocharger Seals Leaking | To check, refer to Procedure 03-05. To replace turbocharger, refer to Procedure 03-14, or 03-13. |
| OK | |
| Air Compressor Malfunction | Check air compressor, refer to Procedure 01-11. To replace air compressor head, refer to Procedure 04-14. To replace air compressor, refer to Procedure 04-15. |
| OK | |
| Air Leak Through Fan Clutch | Replace fan clutch. |
| OK | |
| Charge pressure orifice for oil cooled alternator too large or missing | Replace orifice. |
| OK | |
| Piston, Piston Ring, or Cylinder Liner Worn or Damaged | Use oil analysis and inspect oil filters for probable cause, refer to Procedure 02-04. To locate failed cylinder, refer to Procedure 07-13. Remove and repair failed parts. |

## Engine Vibration Excessive

| Cause | Corrections |
|---|---|
| Idle Speed Too Low | Adjust idle speed, refer to Procedure 05-05. |
| OK | |
| Fan is Loose, Damaged, or Not in Balance | Check fan, refer to Procedure 01-21. Tighten/replace as necessary. |
| OK | |
| Engine Mounts or Mounting Brackets Loose or Damaged | Check for damage. Replace failed parts/tighten as necessary. |
| OK | |
| Loose or Damaged Vibration Damper | Check damper, refer to Procedure 07-34 or 07-35. |
| OK | |
| Loose or Damaged Flywheel | Check flywheel, refer to Procedure 07-52. |
| OK | |
| Damaged Driveline Components or Clutch Assembly Not Balanced | Check driveline components. Refer to equipment manufacturer's specification. |
| OK | |
| Incorrect/Unbalance Engine Components | Check flywheel, pulleys, gears, crankshaft, pistons, rods for correct part number and for balance. |

# Engine Noise - Diagnostic Procedures

**NOTE:** When diagnosing engine noise problems, make sure that noises caused by accessories, such as the air compressor and power take-off, are **not** mistaken for engine noises. Remove the accessory drive belts to eliminate noise caused by these units. Noise will also travel to other metal parts **not** involved in the problem. The use of a stethoscope can help locate an engine noise.

Engine noises heard at the crankshaft speed (engine RPM), are noises related to the crankshaft, rods, pistons, and piston pins. Noises heard at the camshaft speed (one-half of the engine RPM) are related to the valve train. A hand-held digital tachometer can help to determine if the noise is related to components operating at the crankshaft or camshaft speed.

Engine noise can sometimes be isolated by holding down the injector plungers one at a time. If the volume of the noise decreases or the noise disappears, it is related to that particular engine cylinder.

There is **not** a definite rule or test that will positively determine the source of a noise complaint.

Engine driven components and accessories, such as gear-driven fan clutches, hydraulic pumps, belt-driven alternators, air-conditioning compressors, and turbochargers can contribute to engine noise. Use the following information as a guide to diagnosing engine noise:

## Main Bearing Noise

The noise caused by a loose main bearing is a loud, dull knock heard when the engine is pulling a load. If all main bearings are loose, a loud clatter will be heard. The knock is heard regularly every other revolution. The noise is the loudest when the engine is ‘‘lugging’’ or under heavy load. The knock is duller than a connecting rod noise. Low oil pressure can also accompany this condition.

If the bearing is **not** loose enough to produce a knock by itself, the bearing can knock if the oil is too thin or if there is no oil at the bearing.

An irregular noise can indicate worn crankshaft thrust bearings.

An intermittent sharp knock indicates excessive crankshaft and clearance. Repeated clutch disengagement can cause a change in the noise.

## Connecting Rod Bearing Noise

Connecting rods with excessive clearance knock at all engine speeds and under both idle and load conditions. When the bearings begin to become loose, the noise can be confused with piston slap or loose piston pins. The noise increases in volume with engine speed. Low oil pressure can also accompany this condition.

## Piston Noise

It is difficult to tell the difference between piston pin, connecting rod, and piston noise. A loose piston pin causes a loud double knock which is usually heard when the engine is idling. When the injector to this cylinder is held down, a noticeable change will be heard in the sound of the knocking noise. However, on some engines, the knock becomes more noticeable when the vehicle is operated on the road at a steady speed condition.

## Engine Noise Excessive

| Cause | Corrections |
|---|---|
| Fan Belt Malfunction (Too Tight, Loose, or Not in Alignment) | Check belt, refer to Procedure 01-25. |
| OK | |
| Fan Blades Damaged or Contacting Shroud or Radiator Core | Check fan. Replace/repair as necessary. |
| OK | |
| Exhaust Gas Leak | Check for leak, refer to Procedure 03-10. |
| OK | |
| Exhaust Pipe Mounting Loose | Tighten mounting clamps. |
| OK | |
| Incorrect Turbocharger Installed (Causing Surge) | Check turbocharger part number, refer to Procedure 03-07. To replace turbocharger, refer to Procedure 03-13 (KT-KTA) or 03-14 (KTTA). |
| OK | |
| Excessive Valve Clearance | Remove rocker covers. Check and adjust crossheads, valves and injectors, refer to Procedure 07-05. |
| OK | |
| Injector Malfunction | Replace injectors, refer to Procedure 05-09. |
| OK | |
| Incorrect Fuel Grade or Poor Quality Fuel | Check fuel and compare to specifications. Inspect/replace fuel filters. |
| OK | |

(Continued)

## Engine Noise Excessive (Continued)

| Cause | Corrections |
|---|---|
| Incorrect Injection Timing | Check injection timing, refer to Procedure 07-20. Adjust by changing the camshaft key. |
| OK | |
| Internal Engine Damage | Use oil analysis and inspect oil filters for probable cause, refer to Procedure 02-04. |
| OK | |
| Piston, Piston Ring, Cylinder Liner Damage or Excessive Wear | To locate failed cylinder, refer to Procedure 07-13. Remove and repair failed parts, refer to Procedure 07-24. |
| OK | |
| Main or Connecting Rod Bearings Loose or Damaged | Remove oil sump and inspect bearings. Replace all damaged parts. |
| OK | |
| Excessive Gear Backlash or Damaged Gear Teeth | Remove front cover and inspect gears, refer to Procedure 07-24. Replace all damaged parts. |

## Exhaust Smoke (White) At Idle Excessive (Warm Engine)

| Cause | Corrections |
|---|---|
| Cylinder Cutout Valve Malfunction | Check operation. Replace valve assembly. |
| OK | |
| Oil Leaking at STC Oil Manifold, Control Valve, or Supply Line | Tighten fittings or replace o-ring seals. |
| OK | |
| STC Stuck in Normal Mode (Retarded Mode) | Check the Fuel Pressure Switch, Oil Control Valve and Wiring Harness. Refer to Procedures 05-26, 05-27, 05-25. |
| OK | |
| Oil Leaking at STC Banjo Fitting | Remove rocker lever covers and check for oil leak. Replace failed parts. |
| OK | |
| Incorrect Fuel Grade or Poor Quality Fuel | Check fuel and compare to specifications. Operate engine on a temporary supply tank with high quality fuel. Check operation, replace fuel and filters as necessary. |
| OK | |
| Valves and Injectors Adjusted Wrong | Check/adjust valves and injectors, refer to Procedure 07-05 |
| OK | |
| Injector or Tappet Malfunction or Wrong Injectors Installed | Isolate faulty injector, refer to Procedure 05-21. To replace the injector, refer to Procedure 05-09. |
| OK | |

(Continued)

## Exhaust Smoke (White) At Idle Excessive (Warm Engine) (Continued)

| Cause | Corrections |
|---|---|
| Injection Timing Wrong (Too Retarded) | Check injection timing, refer to Procedure 07-20. Adjust by changing the camshaft key. |
| OK | |
| Valve Recession in Head Too Deep | Isolate faulty cylinder head. To replace cylinder head, refer to Procedure 07-14. |
| OK | |
| Incorrect Pistons (Wrong Compression Ratio) | Remove cylinder heads. Refer to Procedure 07-14. Check piston part number. |

**NOTE:** A warm engine is one where the coolant temperature is 70°C [160°F] or higher.

# NOTES

# Section 1 - Cooling System

## Section Contents


| | Reference No. | Page No. |
|---|---|---|
| Service Tools | 01-00 | 1-2 |
| General Information | 01-01 | 1-3 |
| Specifications | 01-02 | 1-4 |
| Flow Charts | 01-03 | 1-9 |
| Venting | 01-04 | 1-11 |


## System Troubleshooting and Repair List


| | Procedure No. | Page No. |
|---|---|---|
| Cooling System - Maintenance | 01-05 | 1-12 |
| Cooling System - Drain | 01-06 | 1-13 |
| Cooling System - Fill | 01-07 | 1-14 |
| Coolant Filter - Replace | 01-08 | 1-16 |
| Diesel Coolant Additives (DCA4) | 01-09 | 1-17 |
| Cooling System - Clean | 01-10 | 1-18 |
| Cooling System - Test for Air or Combustion Gasses | 01-11 | 1-21 |
| Cooling System - Pressure Test | 01-12 | 1-26 |
| Hoses - Check | 01-13 | 1-29 |
| Coolant Temperature Gauge - Check | 01-14 | 1-29 |
| Radiator Pressure Cap - Check | 01-15 | 1-30 |
| Radiator Fins - Inspect | 01-16 | 1-30 |
| Radiator Baffle Leakage - Check | 01-17 | 1-31 |
| Radiator - Check for Reverse Flow | 01-18 | 1-31 |
| Radiator - Check for Obstruction | 01-19 | 1-32 |
| Shutter Operation - Check | 01-20 | 1-33 |
| Fan and Fan Shroud - Inspect | 01-21 | 1-35 |
| Fan - Replace | 01-22 | 1-36 |
| Fan Drive Belt - Replace | 01-23 | 1-37 |
| Fan Clutch - Check Operation | 01-24 | 1-39 |
| Fan RPM - Check | 01-25 | 1-42 |
| Fan Hub (Belt Driven) - Replace | 01-26 | 1-44 |
| Fan Hub (Gear Driven) - Replace | 01-27 | 1-45 |
| Fan Hub Idler and Shock Absorber (or Turnbuckle) - Replace | 01-28 | 1-47 |
| Water Pump Block Pressure - Check | 01-29 | 1-49 |
| Water Pump - Replace | 01-30 | 1-51 |
| Water Pump - Check for Reuse | 01-31 | 1-55 |
| Thermostat - Test (Thermostat in Chassis) | 01-32 | 1-56 |
| Thermostat - Replace | 01-33 | 1-58 |
| Thermostat - Check Operating Temperature | 01-34 | 1-62 |
| Thermostat Housing - Replace | 01-35 | 1-63 |
| Coolant Leak at Counterbore - Check | 01-36 | 1-65 |

# Required Service Tools (01-00)

## Cooling System

The following special tools are recommended to perform the procedures in Section 01. The use of these tools is shown in the appropriate procedure. These tools can be purchased from your local Cummins Authorized Repair Location.

| Tool No. | Tool Description | Tool Illustration |
|---|---|---|
| 3300846S (Fleetguard@)<br><br>3375208 (Cummins) | **DCA4 Coolant Test Kit**<br>Measure chemical concentration in the coolant to determine if the system is adequately protected. | 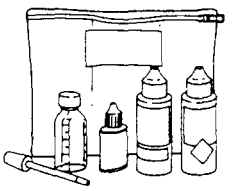 |
| 3377462 | **Optical Tachometer**<br>Measure the rpm of any rotation part. Can be used to measure engine rpm. Contains Part No. 3377464 Reflective Tape. | 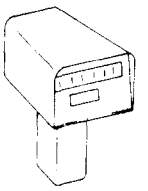 |
| 3377464 | **Reflective Tape (in Part No.3377462 Optical Tachometer)**<br>Used with Part No. 3377462 Optical Tachometer to measure rpm. | 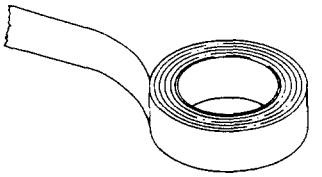 |
| 3375411 | **Thermostat Seal Mandrel**<br>Install the thermostat seal in the thermostat housing. | 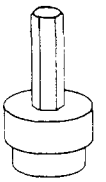 |
| | | |
| | | |

# General Information (01-01)

The primary function of the cooling system is to remove unused heat energy, created by the combustion process, from the engine. The excess heat energy that is not removed by the cooling system is carried away by exhaust gases and radiation into the atmosphere.

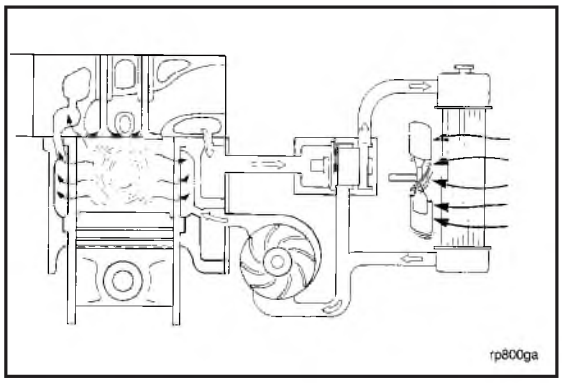


The accompanying chart illustrates the coolant flow through the engine. For more detail, refer to the coolant flow charts in Reference 01-03.

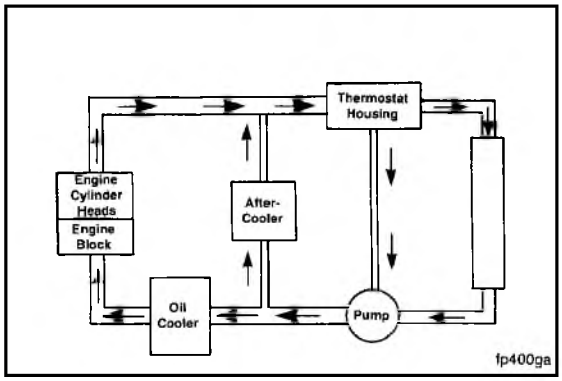


The following publications, available through Cummins Distributors or Cummins Dealers, provide cooling system installation recommendations and specifications approved by Cummins Engine Company, Inc.

- Automotive Installation recommendations (Cooling System), Bulletin No. 3382413.
- Construction, Mining, Logging, and Agriculture Installation Recommendations (Cooling System), Bulletin No. 3382171.
- Data Sheets for Construction, Mining, Logging, and Agriculture No. 3381194; For Generator Drive and Genset No. 3381174; for Automotive No. 3381237.
- Operation of Diesel Engines in Cold Climates, Bulletin No. 3379009.
- Generator Drive and Genset Installation Recommendations (Cooling System) Bulletin No. 3382395.

**NOTE:** Refer to Section 12 for literature ordering information.

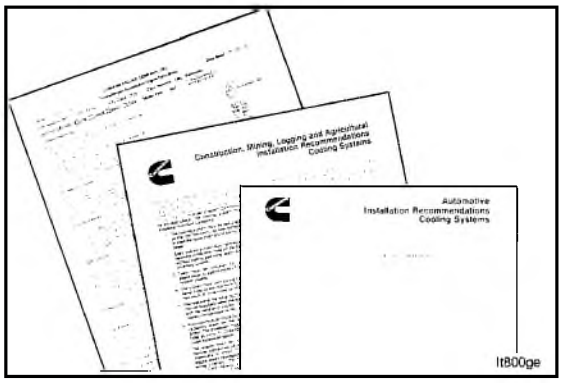

# Cooling System Specifications (01-02)

| | KT | KTA/KTTA |
|---|---|---|
| Coolant Capacity (Engine Only) | 26 Liters [28 U.S.Qts.] | 30 Liters [32 U.S.Qts.] |
| Standard Modulating Thermostat- Range | 80°-90°C [175-195°F] | 80°-90°C [175-195°F] |
| Maximum Coolant Pressure (Exclusive of Pressure Cap) | 241 kPa [35 psi] | 241 kPa 35 psi] |
| Maximum Allowable Top Tank Temperature | 95°C 203°F] | 95°C [203°F] |
| Minimum Recommended Top Tank Temperature | 70°C [160°F] | 70°C [160°F] |
| Maximum Allowable Deaeration Time | 25 minutes | 25 minutes |
| Minimum Allowable Drawdown or 20% of System Capacity (Whichever is greater) | 9.5 Liters [10 U.S.Qts.] | 11 Liters [12 U.S.Qts.] |
| Minimum Allowable Pressure Cap | 50 kPa [7 psi] | 50 kPa [7 psi] |

## Fleetguard Products For Cummins Engines (A)

| | Fleetguard Part No. | Cummins Part No. | DCA4 Units |
|---|---|---|---|
| **Table 1:** | **DCA4 Spin-on Coolant Filters** | | |
| | WF-2070 | 3318157 | 2 |
| | WF-2071 | 3315116 | 4 |
| | WF-2072 | 3318201 | 6 |
| | WF-2073 | 3315115 | 8 |
| | WF-2074 | 3316053 | 12 |
| | WF-2075 | 3318318 | 15 |
| | WF-2076 | 3318319 | 23 |
| **Table 2:** | **DCA4 Liquid** | | |
| | DCA60L | 3315459 | 4 (1 pint) |
| | DCA80L | 3317428 | 1760 (55 gallons) |
| **Table 3:** | **DCA4 Powder** | | |
| | DCA95 | 3318320 | 20 |
| **Table 4:** | **RESTORE Heavy-Duty Cooling System Cleaner** | | |
| | CC2610 | None | 1 gallon |
| | CC2611 | None | 5 gallons |
| | CC2612 | None | 55 gallons |

**(A) Recommended for use with all Cummins engines.**

## DCA4 Maintenance Guide

| System Capacity (A) | | Precharge Filter (B) | Service Filter (C) |
|---|---|---|---|
| Litres | Gallons | | |
| 19-26 | 5-7 | WF-2072 | WF-2070 |
| 30-38 | 8-10 | WF-2073 | WF-2071 |
| 42-57 | 11-15 | WF-2074 | WF-2071 |
| 61-76 | 16-20 | WF-2075 | WF-2071 |
| 80-114 | 21-30 | WF-2076 | WF-2072 |
| 118-190 | 31-50 | (D) | WF-2073 |
| 194-380 | 51-100 | (D) | WF-2075 (E) |
| 384-570 | 101-150 | (D) | WF-2076 (F) |

**Notes:**

a. Consult the vehicle equipment manufacturer's maintenance information for total cooling system capacity.

b. After draining and replacing the coolant, **always** precharge the cooling system to maintain the DCA4 concentration between 1 and 2 units per gallon.

**NOTE:** When performing service which requires draining the cooling system, discard the coolant. Reusing coolant can introduce contaminates or overconcentrated chemicals, resulting in premature failure of cooling system components.

c. Change coolant filters at regular intervals to protect the cooling system. Service filters listed above are satisfactory for use with maintenance intervals from 16,000 to 40,000 km [10,000 to 25,000 miles] or 250 to 600 hours.

d. To precharge cooling systems larger than 114 litres [30 U.S. gallons], do the following:

1. Install appropriate service filter(s) listed in the above table based on total cooling system capacity.
2. Subtract the total DCA4 units contained in the service filter(s) from the total cooling system capacity in gallons.

   Example: 95 gallon cooling system capacity
   -15 units (1) WF-2075 filter
   80 units

3. The answer represents the additional units required to precharge the cooling system. Four bottles of Part No. 3318320 DCA4 powder will provide a sufficient amount of DCA4 units (80) to precharge the cooling system.
4. Install the appropriate service filter at the next and subsequent maintenance intervals.

e. Or (2) WF-2073 or (4) WF-2071.

f. Or (2) WF-2074 or (4) WF-2072.

g. Frequent coolant testing is unnecessary if recommended precharge and service procedures are followed. Use Fleetguard Test Kit 3300846S to check the coolant additive concentration when DCA4 is used. Refer to the instructions on page 1-7.

## Instructions For Using Test Kit Part No. 3300846S To Test For DCA4

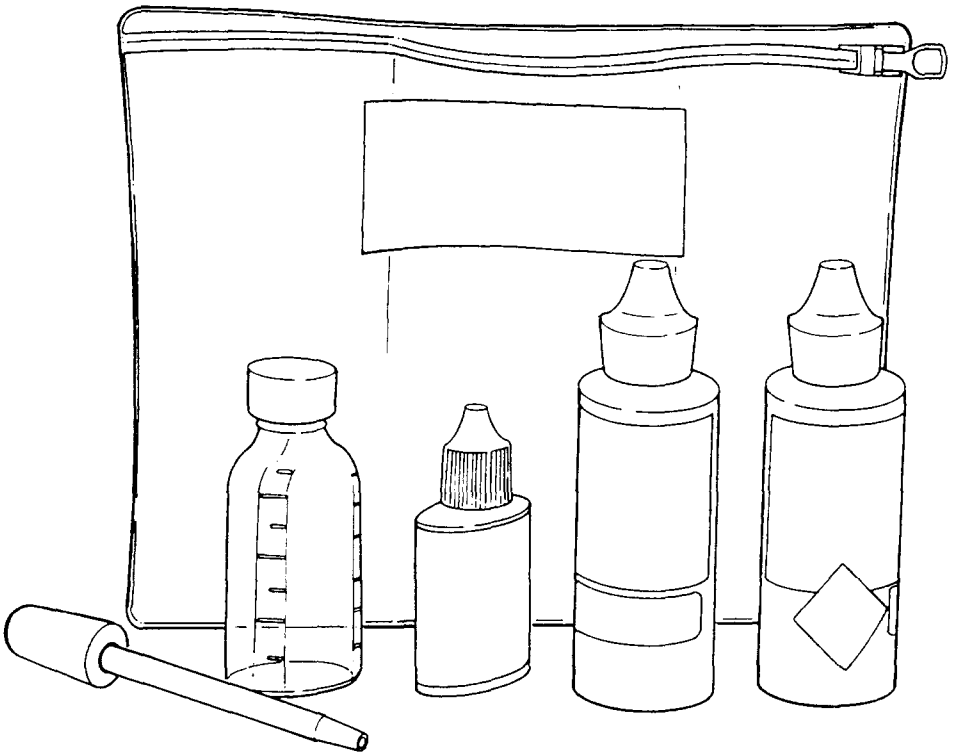

1. Fill the dropper pipet to the 1.0 ml. mark with coolant to be tested.
2. Dispense the 1.0 ml. coolant sample from the dropper pipet into the empty vial.
3. Repeat steps 1 and 2 two more times so that the vial contains 3.0 ml. of the coolant sample.
4. Add tap water to the vial up to the 10.0 ml. mark. Replace the vial cap and shake.
5. Add 2 or 3 drops of red Solution B to the vial and swirl to mix.
6. Add 1 drop of orange Solution A to the vial and swirl to mix. Continue this procedure of adding one drop of Solution A and swirling until the vial solution changes color from red through brown to gray or blue.
7. Record the number of drops of Solution A required to cause the color change, and refer to the table on page 12 for the maintenance required. If additional additive is required, use DCA4.

**Notes:**

1. The above instructions are only for use with cooling systems using DCA4. Follow the original test kit instructions for cooling systems using DCA.
2. Incorrect results will be obtained if the test kit is used to check cooling systems containing a mixture of DCA4 and any other supplemental coolant additive. If it is necessary to test coolant containing a mixture of DCA4 and any other supplemental coolant additive, contact Analysts, Inc. (213) 541-5611 for the location of the nearest Analysts laboratory.
3. Frequent coolant testing is unnecessary if recommended precharge and service procedures are followed.

Maintain a nominal of one DCA4 unit per gallon of coolant in your system. Less than 0.5 (1/2) unit per gallon indicates an **Under**concentrated coolant solution. More than two units per gallon indicates an **Over**concentrated coolant solution.

| Number of Drops of Solution A Necessary to Cause Color Change | Coolant Conditions | Maintenance Required |
|---|---|---|
| 0-10 Drops | EXTREMELY UNDERCONCENTRATED (less than 0.4 DCA4 units per gallon) | Initially charge the system to a minimum of one DCA4 unit per gallon of coolant. |
| 11-16 Drops | **MARGINALLY UNDERCONCENTRATED** (0.45 to 0.8 DCA4 units per gallon) | Add DCA4 liquid units to maintain one unit per gallon minimum or change the DCA4 filter. |
| 17-25 Drops | **ACCEPTABLE** (.85 to 1.3 DCA4 units per gallon) | None. |
| 26-35 Drops | **HIGH ACCEPTABLE** (1.35 to 2.0 DCA4 units per gallon) | None. |
| 36-55 Drops | **MARGINALLY OVERCONCENTRATED** (2.1 to 3.3 DCA4 units per gallon) | Review maintenance practice. |
| Over 55 Drops | **EXTREMELY OVERCONCENTRATED** | Drain 50% of the coolant and replace with water/antifreeze. Retest for correct DCA4 unit concentration. |

# Cooling System Flow Charts (01-03)

1. Coolant to aftercooler
2. Coolant out of aftercooler
3. Cylinder liner
4. Water pump
5. Coolant bypass from radiator
6. Corrosion resistor

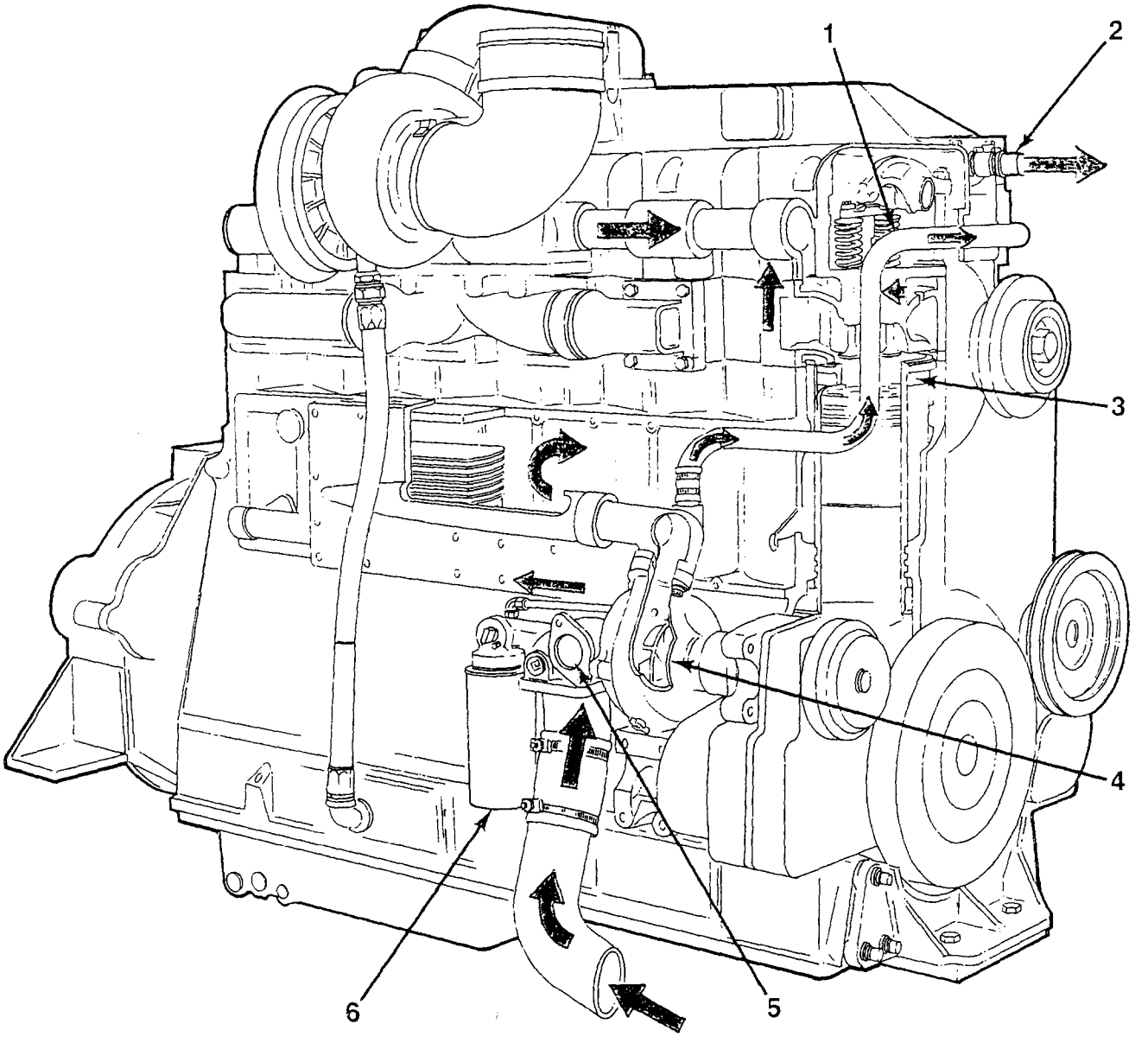

8. Vent to radiator
9. Coolant to radiator
10. Coolant out of aftercooler
11. Thermostats
12. Coolant bypass
13. Coolant manifold

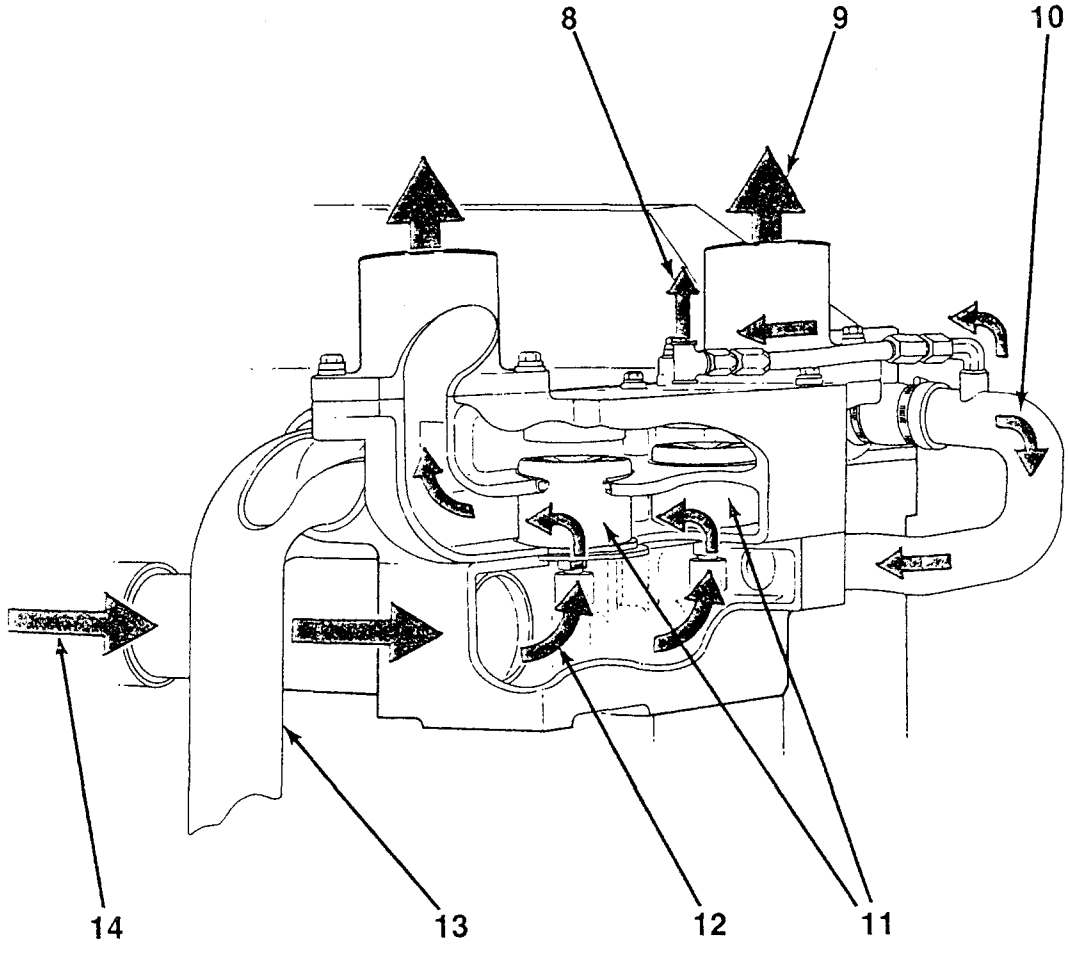

# Cooling System Venting (01-04)

The cooling system must be designed to allow air to escape while filling.

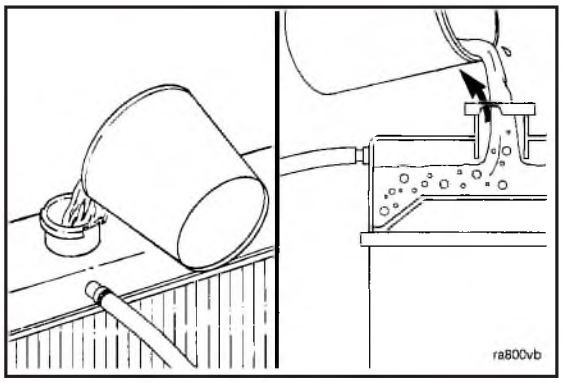


On aftercooled engines the vent line is routed from the aftercooler outlet tube to the top of the thermostat housing (6).

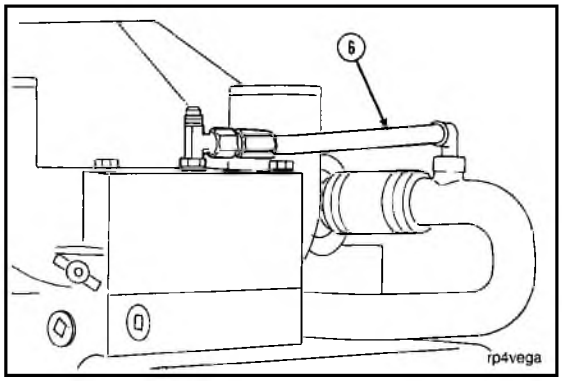


A second vent line(s) is routed from the top of the thermostat housing to the radiator top tank expansion space above the water level.

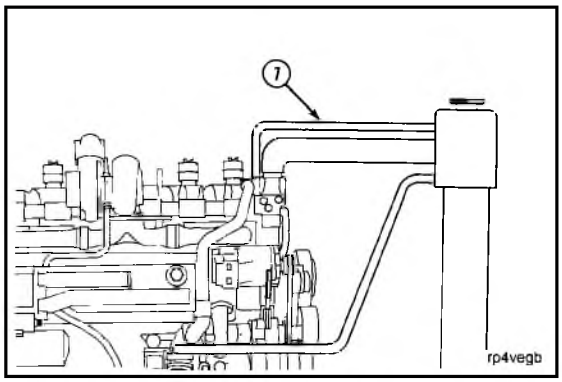


Route the vent line away from the make-up or fill line.

**Caution: Do not route the ''fill'' or vent line in a manner which will allow air to be trapped in the system.**

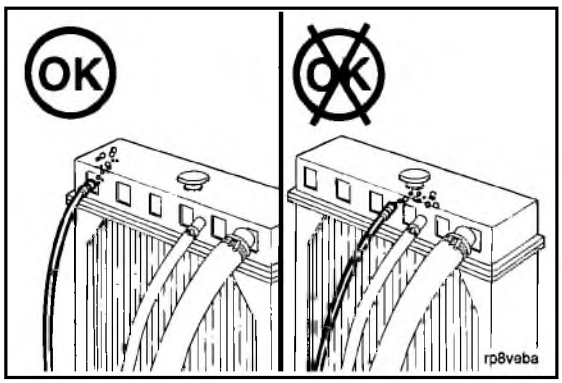

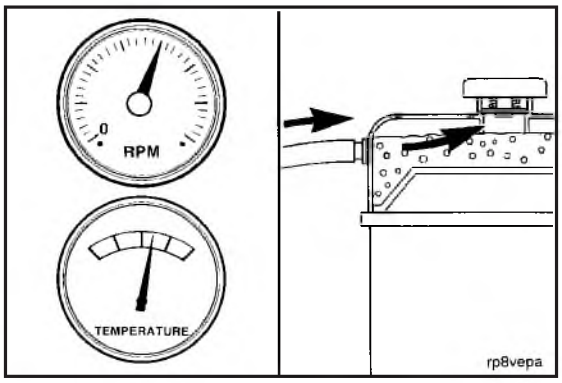


During engine operation coolant will continue to flow through the engine vent line to remove air from the coolant.

| Mineral | Problem Cause | Max. Limit |
|---|---|---|
| Calcium Magnesium (hardness) | Deposits on Liners/Heads/ Coolers | 170 PPM |
| Chloride | General Corrosion | 40 PPM |
| Sulfate | General Corrosion | 100 PPM |

## Cooling System - Maintenance (01-05)

### Water

Always use good quality soft water in the coolant mixture. Water added to the cooling system must meet the specifications given in the accompanying chart.

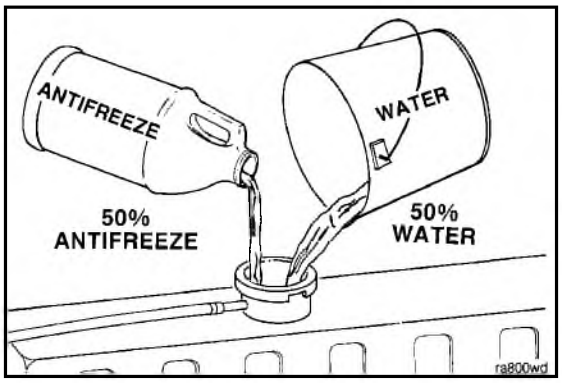


### Antifreeze

**Caution: Antifreeze overconcentration reduces freeze protection. Do not use more than 68 percent antifreeze or overheating may result. A mixture of 50 percent antifreeze and 50 percent water is sufficient for freeze protection to -37°C [-34°F].**

**NOTE:** Use ethylene glycol antifreeze year-round to provide freeze point and boil-over protection.

**Caution: Do not use a high silicate antifreeze. A silicate-gel (hydro-gel) formation can occur when a cooling system contains an overconcentration of high silicate antifreeze and, or supplemental coolant additives. Engine damage will result.**

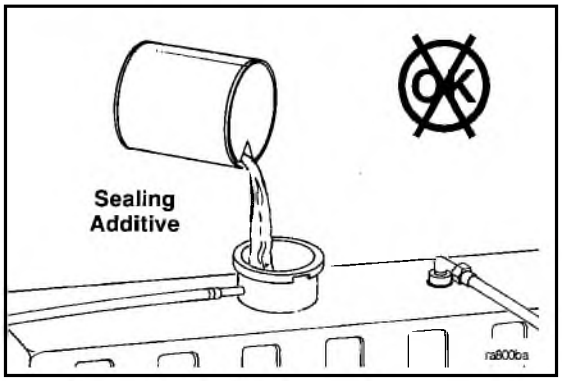


### Sealing Additives

Do not use sealing additives in the cooling system. Using sealing additives will cause the following problems:

- Buildup in coolant low flow areas.
- Clogged coolant filters
- Plugged radiator.

## Soluble oils

Do not use soluble oils in the cooling system. The use of soluble oils will:

- allow cylinder liner pitting,
- corrode brass and copper,
- damage heat transfer surfaces, and
- damage seals and hoses.

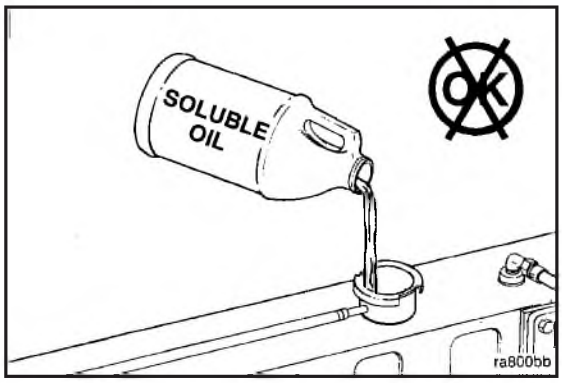


## Coolant additives and filters

Diesel coolant additives (DCA4) (or equivalent) are required to protect the cooling system from fouling, solder blooming, and general corrosion. The coolant filter is required to protect the cooling system from abrasive material, debris, and precipitated coolant additives.

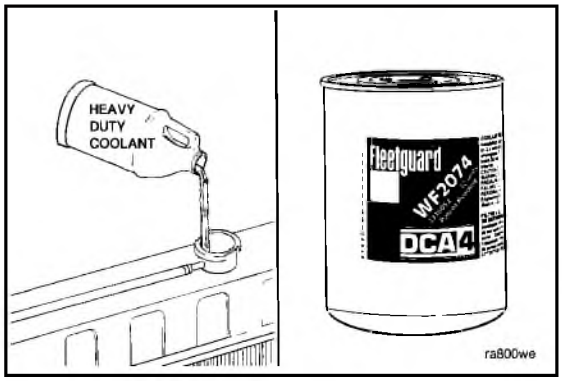


# Cooling System - Drain (01-06)

1. Position the vehicle on level ground.

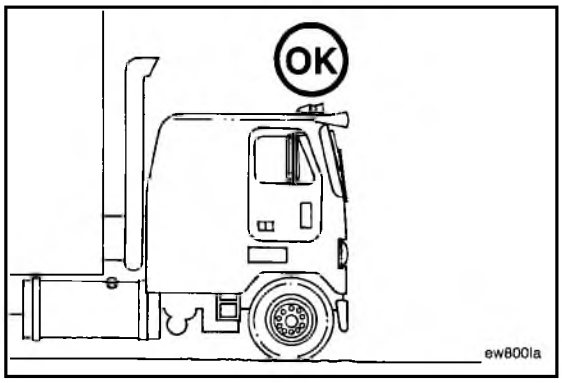


**Warning: Wait until the temperature is below 50°C coolant system pressure cap. Failure to do so can cause personal injury from heated coolant spray.**

2. Remove the radiator cap after the engine is cool.

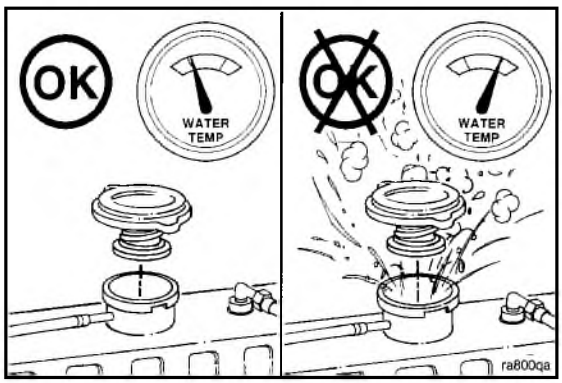

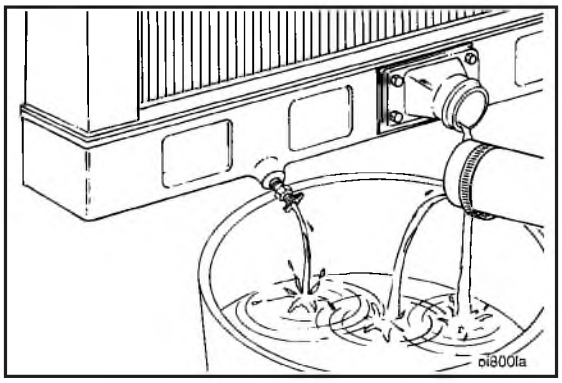

3. Drain the cooling system as follows:
   - Open the radiator draincock.
   - Remove the lower radiator hose(s).

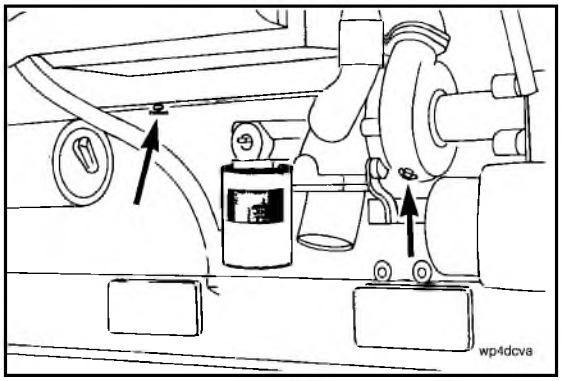


- Open the water pump draincock.
- Open the oil cooler draincock.

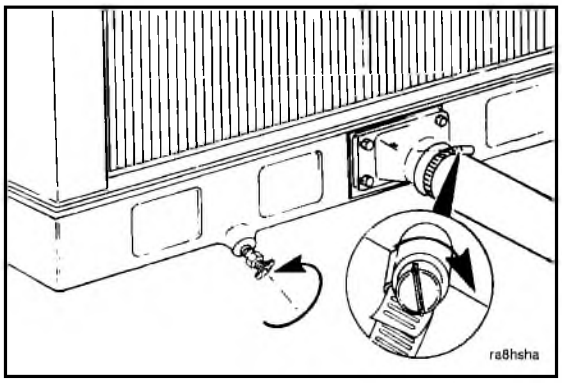


## Cooling System - Fill (01-07)

1. Close the radiator draincock.
2. Install the lower radiator hose(s).
3. Tighten the hose clamps to 5 N•m [40 in-lb].

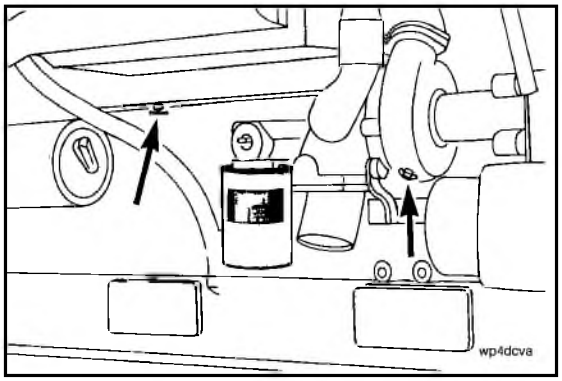


4. Close the engine draincock.
5. Close the oil cooler draincock.

6. Use a mixture of 50 percent ethylene glycol antifreeze and 50 percent water to fill the cooling system.

**NOTE:** Use the correct DCA4 initial charge filter to obtain the correct cooling system protection. Refer to Procedure 01-09.

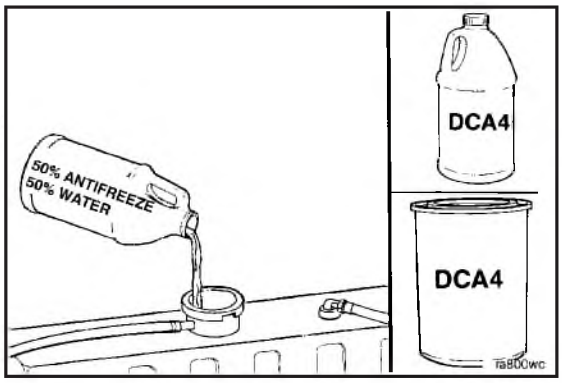


7. Fill the cooling system with coolant to the bottom of the fill neck in the radiator fill (or expansion) tank.

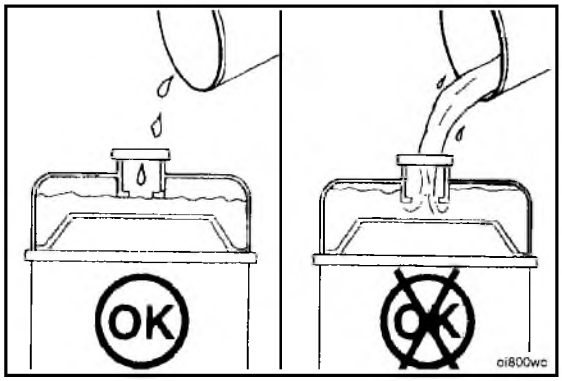


8. Install the radiator or fill cap.
9. Operate the engine until the coolant reaches a temperature of 70°C [160°F], and check for leaks.

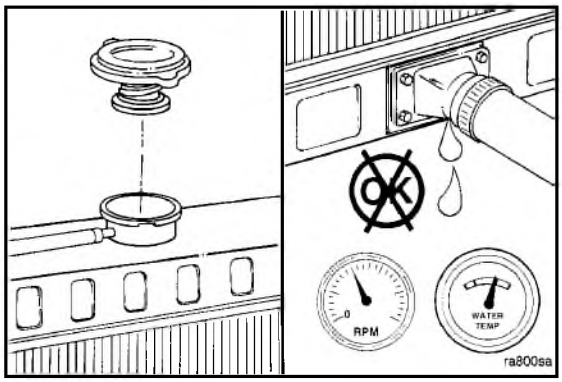


10. Shut the engine off, and allow it to cool.

**Warning: Check the coolant level only when the engine is stopped. Wait until the temperature is below 50°C [120°F] before removing the pressure cap. Failure to do so can cause personal injury from heated coolant spray.**

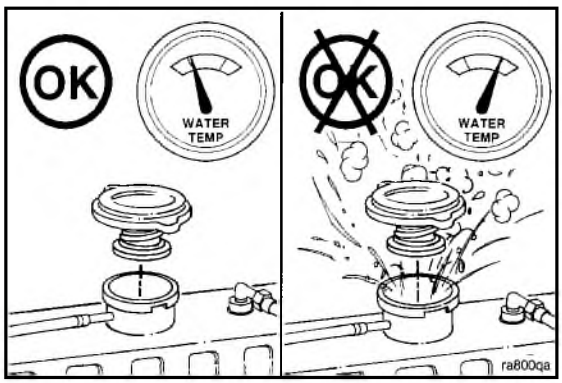

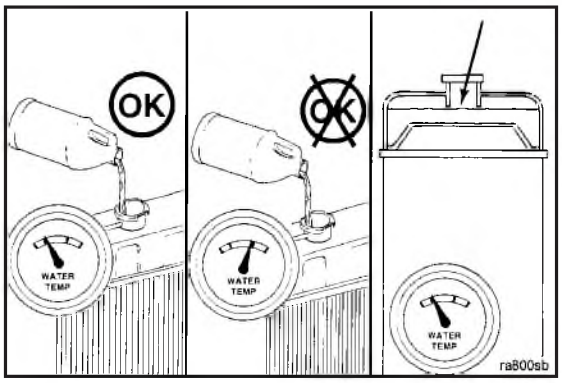


**Caution: Do not add cold coolant to a hot engine. Engine castings may be damaged. Allow the engine to cool to below 50°C [120°F] before adding coolant.**

11. Remove the radiator or fill cap, and check the coolant level. Add coolant if necessary.

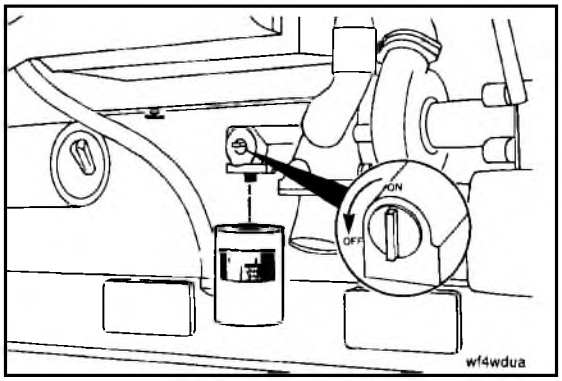


## Coolant Filter - Replace (01-08)

### Remove

1. Turn the valve on the filter head to the ''OFF'' position.
2. Remove the coolant filter.

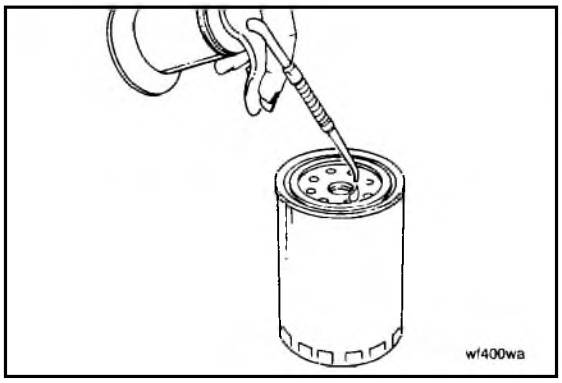


3. Use engine oil and lubricate the seal on the filter.

**NOTE:** Do not allow oil to get in the filter, it will adversely affect the DCA.

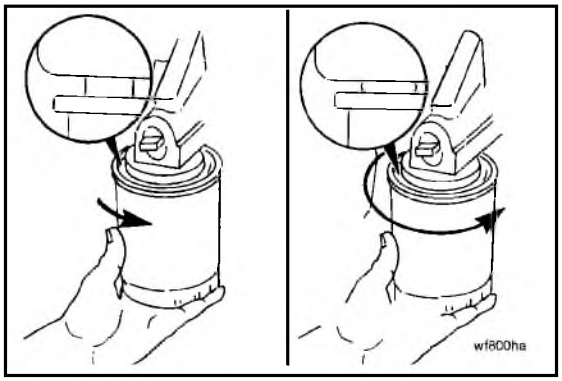


### Install

1. Install the coolant filter. Turn the filter until the seal touches the filter head. Turn the filter an additional one-half to three-fourths of a turn after contact.

2. Turn the valve to the ''ON'' position.

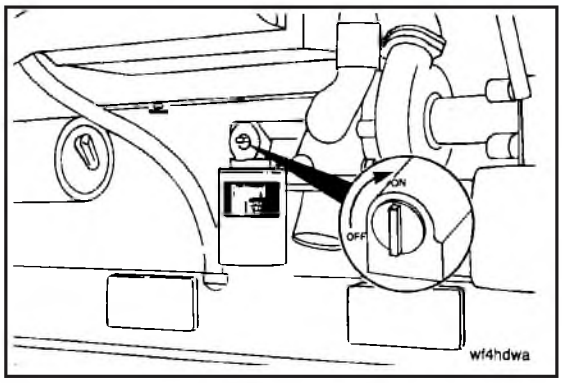


## Diesel Coolant Additives (DCA4) (01-09)

1. Diesel coolant additives (or equivalent) are used to prevent the buildup of corrosion and scale deposits in the cooling system.

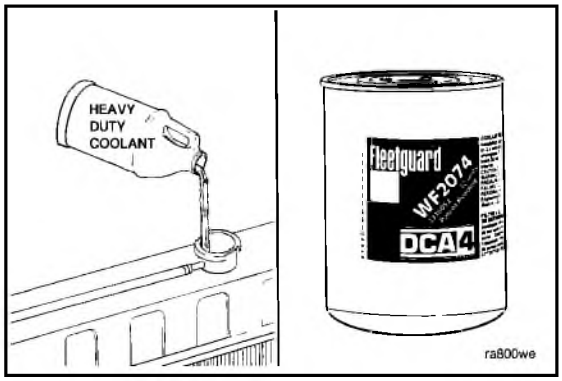


**Caution: Inadequate concentration of coolant additives can result in major corrosive damage to cooling system components. Over concentration can cause the formation of ''gel'' that can cause restrictions and plugging.**

2. The DCA4 concentration must not fall below 1 unit per 3.8 liters [1 U.S. gallon] nor exceed 2 units per 3.8 liters [1 U.S. gallon].

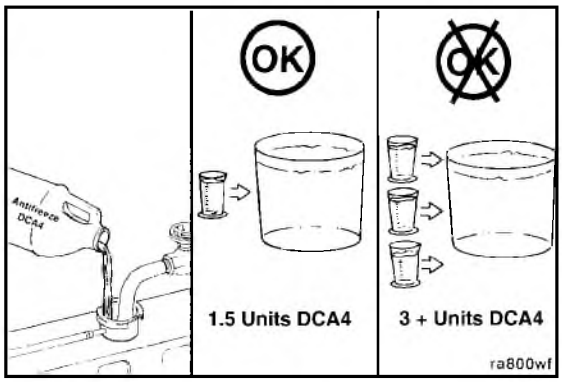


**NOTE:** DCA4 is compatible with all permanent-type antifreeze except Methoxy propanol. If Methoxy Propanol antifreeze is used, reduce the amount of DCA4 by one-third. This will prevent inhibitor loss due to precipitation, caused by chemical incompatibility.

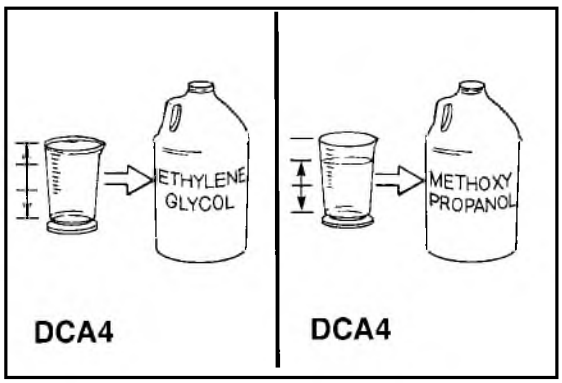

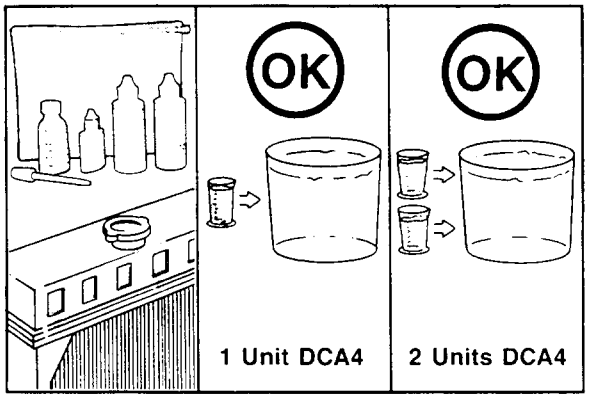


3. When changing the coolant, the initial DCA4 (or equivalent) concentration must be between 1 and 2 units per 3.8 liters [1 U.S. gallon] of coolant (initial charge).

**Note:** The cooling system must be clean before adding DCA4 (or equivalent). Refer to Procedure 01-10.

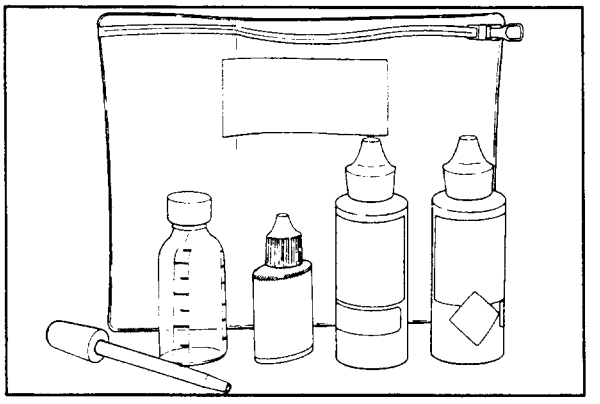

4. If coolant is added between drain intervals, additional DCA4 (or equivalent) will be required.
5. Check the coolant just before changing the coolant filter.
6. Use only coolant test kit, Fleetguard, Part No.3300846S, to check the coolant additive concentration when DCA4 is used. Refer to the instructions in Reference 01-02.

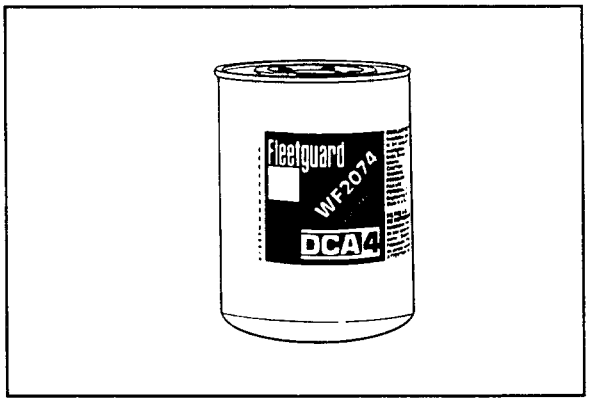


7. Use the correct Fleetguard coolant filter to maintain the correct DCA4 concentration in the system. Refer to Reference 01-02.
8. Maintain the correct concentration by changing the maintenance coolant filter at each oil drain interval.

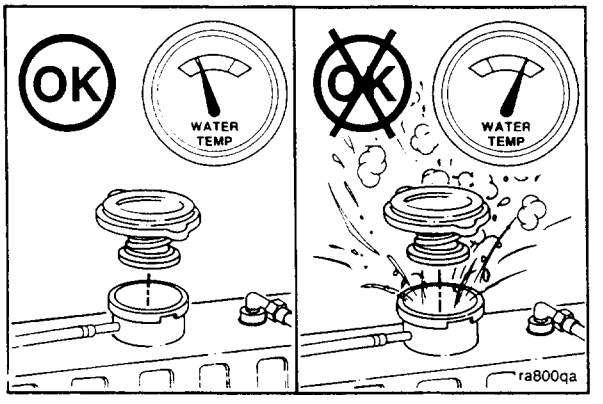


# Cooling System - Clean (01-10)

## System flushing

**Warning: Wait until the temperature is below 50°C [120°F] before removing the coolant system pressure cap. Failure to do so can cause personal injury from heated coolant spray.**

**NOTE:** The performance of RESTORE is dependent on time, temperature, and concentration levels. An extremely scaled or flow restricted system, for example, may require higher concentrations of cleaners, higher temperatures, or longer cleaning times. RESTORE can be safely used up to twice the recommended concentration levels. Extremely scaled or fouled systems may require more than one cleaning.

1. Drain the cooling system. Refer to Procedure 01-06.
2. Do not remove the coolant filters.

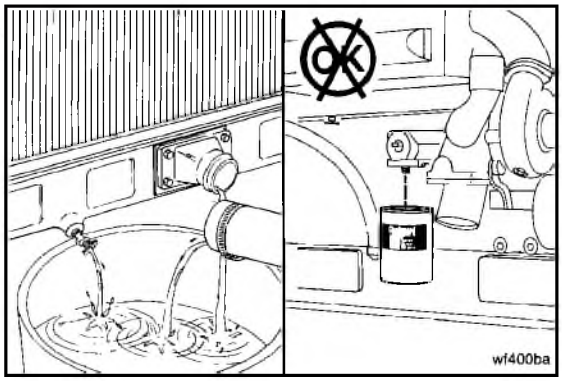


**Caution: Fleetguard RESTORE contains no antifreeze. Do not allow the cooling system to freeze during the cleaning operation.**

3. Immediately add 3.8 liters [1 U.S. gallon] of Fleetguard RESTORE (or equivalent) for each 38 to 57 liters [10 U.S. gallons] of cooling system capacity, and fill the system with plain water.
4. Turn the heater temperature switch to high to allow maximum coolant flow through the heater core. The blower does not have to be on.

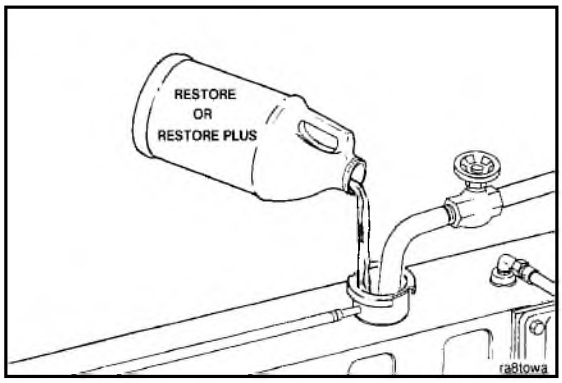


5. Operate the engine at a coolant temperature of at least 85°C [185°F] for 1 to 1 1/2 hours.
6. Shut the engine off, and drain the cooling system. Refer to Procedure 01-06.

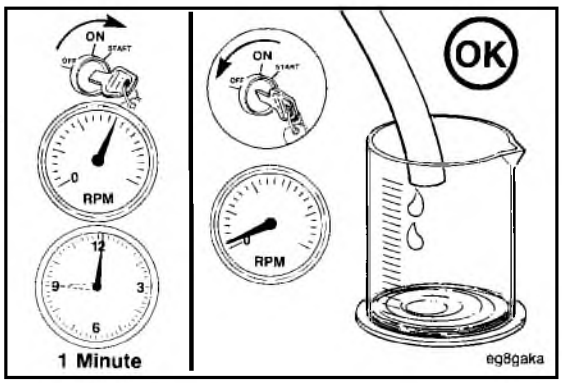

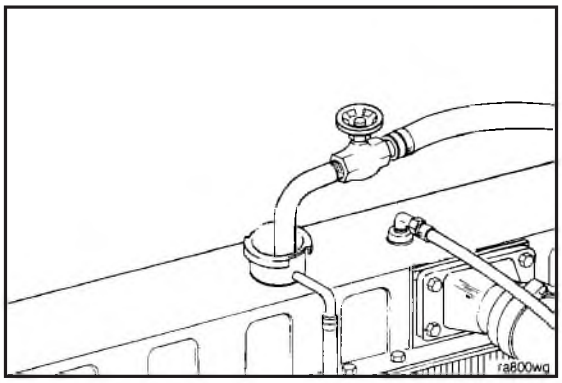


7. Fill the cooling system with clean water. Refer to Procedure 01-07.

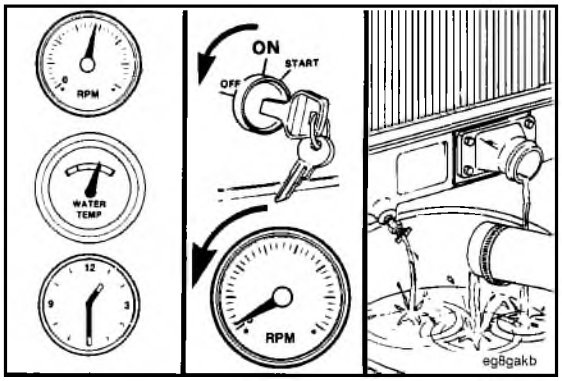


8. Operate the engine at high idle for 5 minutes with the coolant temperature above 85°C [185°F].
9. Shut the engine off, and drain the cooling system. Refer to Procedure 01-06.

**NOTE:** If the water drained is still dirty, the system must be flushed again until the water is clean.

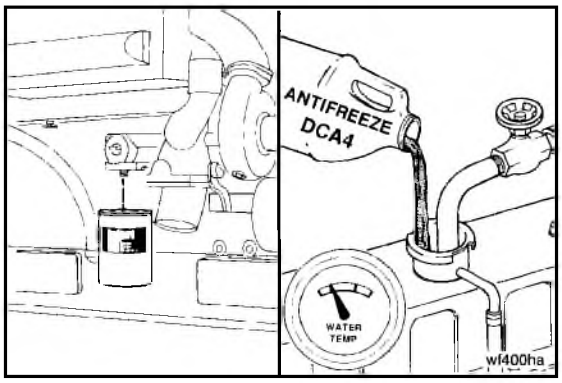


10. Install a new coolant filter, and fill the cooling system with a fresh mixture of 50 percent low silicate antifreeze and 50 percent water. Refer to Procedure 01-07.

**NOTE:** Use an initial charge filter to bring the coolant to the correct DCA4 concentration level. Refer to Reference 01-02.

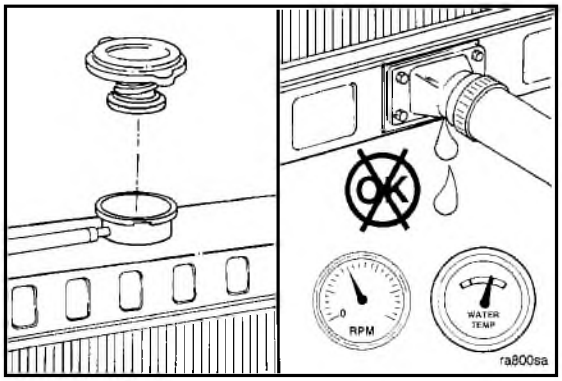


11. Install the pressure cap. Operate the engine until the coolant reaches a temperature of 70°C [160°F], and check for coolant leaks.

# Cooling System - Test For Air Or Combustion Gases (01-11)

**Warning: Wait until the temperature is below 50°C [120°F] before removing the coolant system pressure cap. Failure to do so can cause personal injury from heated coolant spray.**

1. Allow the engine to cool, and remove the radiator cap.

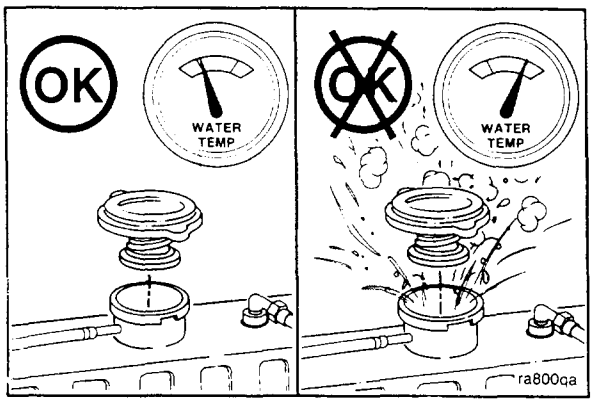


**Note:** Two methods are commonly used to check for air or combustion gases in the coolant. Use the method that works best for your application.

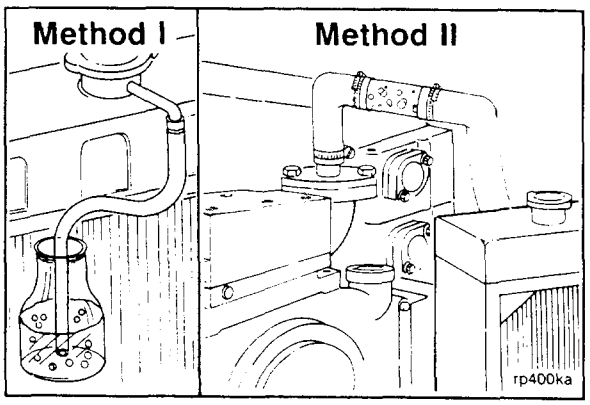


## Method 1

1. Install a radiator pressure cap which has had the spring and the pressure relief valve removed.
2. Attach a rubber hose to the radiator overflow connection.
3. Put the free end of the hose below the water level in a container of water.

**Note:** The pressure cap must be tightly sealed in the top of the radiator fill neck.

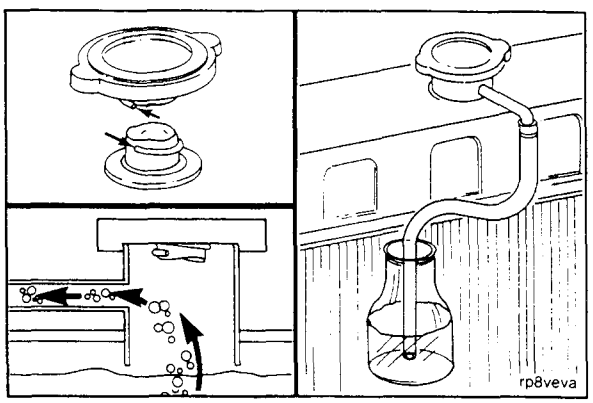


4. Operate the engine at 75 percent of rated RPM until it reaches an operating temperature of 80°C [180°F].
5. Check for a continuous flow of air bubbles from the hose in the water container.

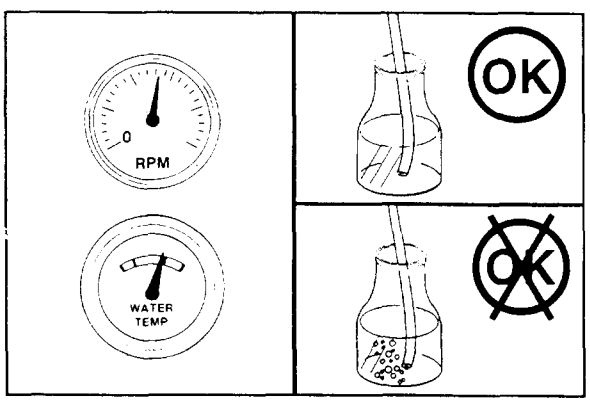

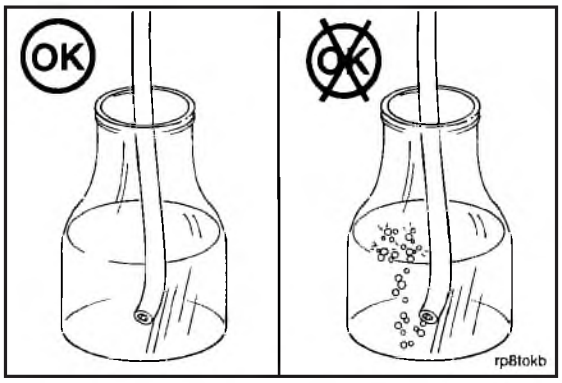


6. A continuous flow of air bubbles indicates excessive air in the system. Continue to operate the engine for 25 minutes.
7. If the flow of bubbles does not stop, check for the following:
   - Cracked or porous cylinder liner.
   - Defective fan or shutter air control valve.
   - Air compressor head gasket leaking into the coolant.

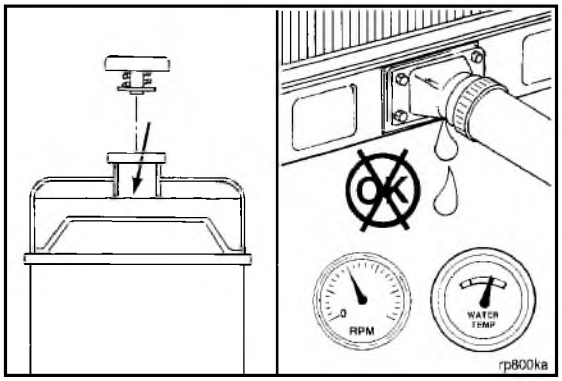


8. If no air is found in the system, or if the flow of bubbles stops within 25 minutes, do the following:
   - Remove the test equipment.
   - Check the coolant level and fill if necessary.
   - Install the correct radiator pressure cap.
   - Operate the engine until it reaches a temperature of 70°C [160°F], and check for coolant leaks.

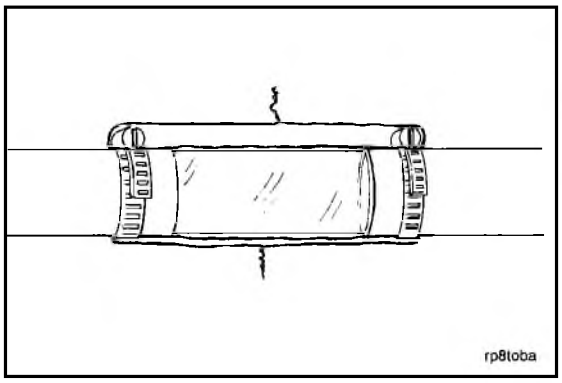


## Method 2

1. Put a clear Pyrex tube in the water connection between the radiator and the thermostat housing.

**NOTE:** If desired, put the Pyrex tube in the vent line between the thermostat housing and the radiator.

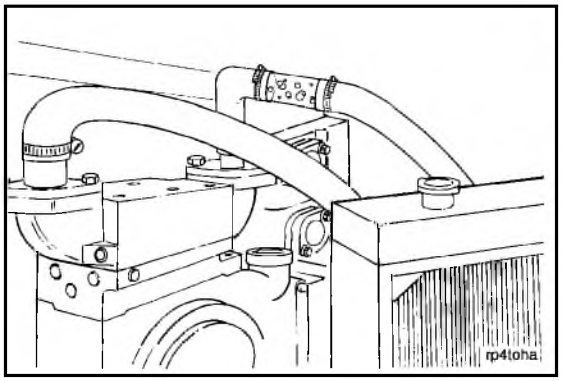


**Caution: Use wire lace to cover the tube and hose. Personal injury can result if the Pyrex tube separates from the hoses.**

2. Operate the engine at 75 percent of rated RPM until it reaches an operating temperature of 80°C [180°F].
3. Check for a continuous flow of air bubbles in the hose.

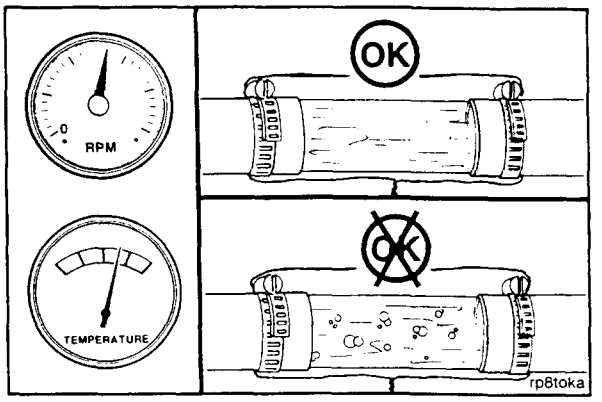


4. A continuous flow of air bubbles indicates excessive air in the system. Continue to operate the engine for 25 minutes.
5. If the flow of bubbles does not stop, check for the following:
   - Cracked or porous cylinder liner.
   - Defective fan or shutter air control valve.
   - Air compressor head gasket leaking into the coolant.

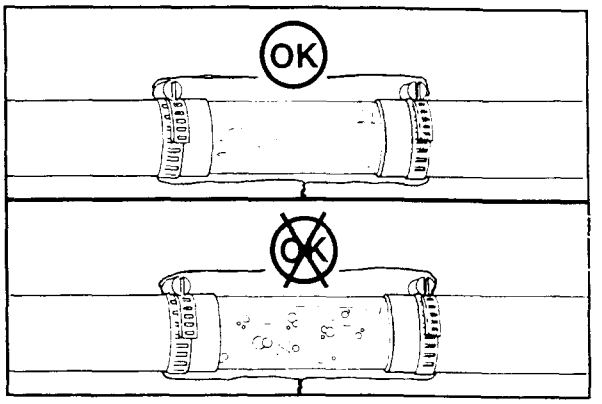


6. If no air is found in the system, or if the flow of bubbles stops within 25 minutes, do the following:
   - Remove the test equipment.
   - Check the coolant level and fill if necessary.
   - Install the correct radiator pressure cap.
   - Operate the engine until it reaches a temperature of 70°C [160°F], and check for coolant leaks.

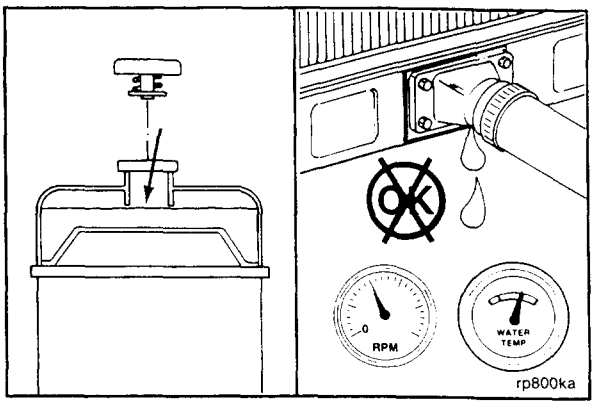


## Cracked or porous cylinder liner

1. A cracked or porous cylinder liner will pressurize the cooling system and force coolant out the overflow tube.

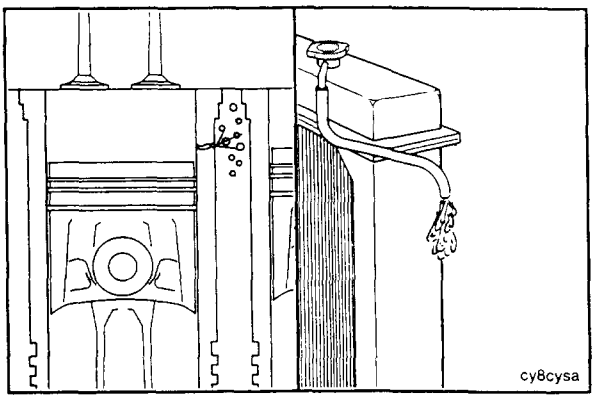

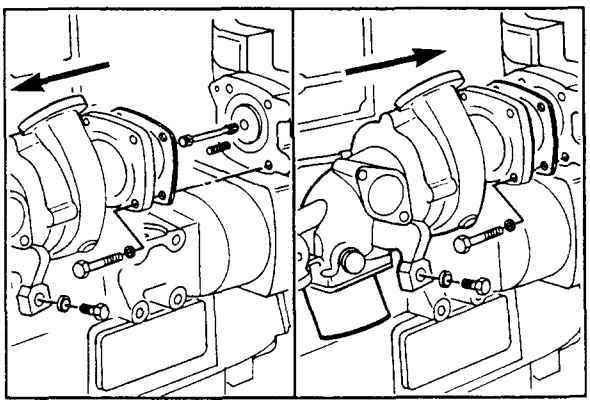

To determine which liner is leaking, perform the following:

a. Remove the water pump. Refer to Procedure 01-30.

b. Remove the drive shaft.

c. Install the water pump without the drive shaft.

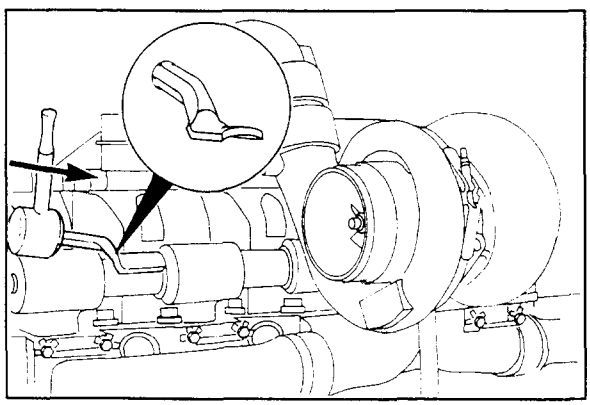

d. Slide the water manifold tubes into the rocker lever housing.

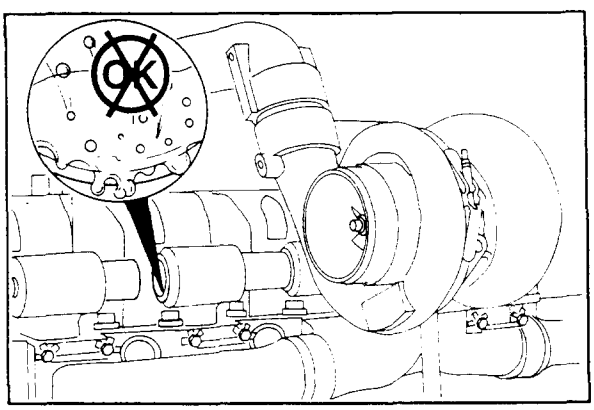


e. Operate the engine at low idle for a maximum of 4 minutes. Check inside the water passage of each rocker lever housing for air bubbles. Air bubbles in the coolant indicate a pourous or cracked cylinder liner. Replace the defective cylinder liner, refer to Procedure 07-26.

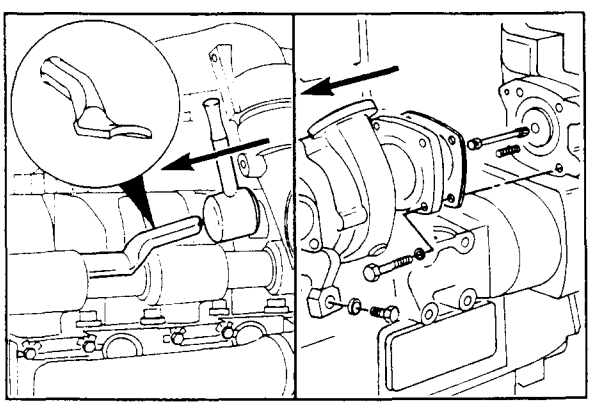

f. Install the water tubes and water pump drive shaft.

## Defective Air Control Valve

1. To check the air control valve perform the following:
   a. Remove air pressure from the tank that supplies the valve in question.
   b. Disconnect the air supply line from the valve. Install a plug in the air supply line.

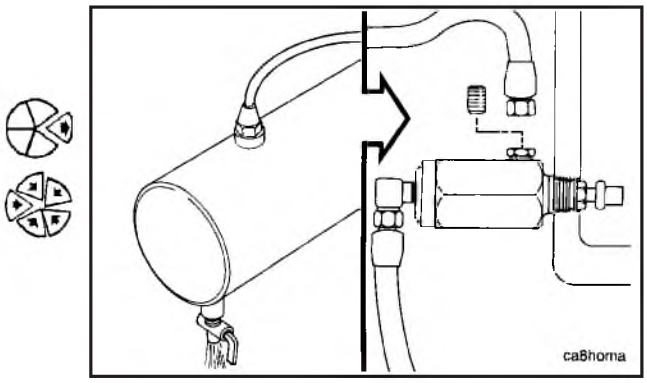


   c. Repeat the test. If no air is found in the cooling system, the air control valve is defective and must be replaced.

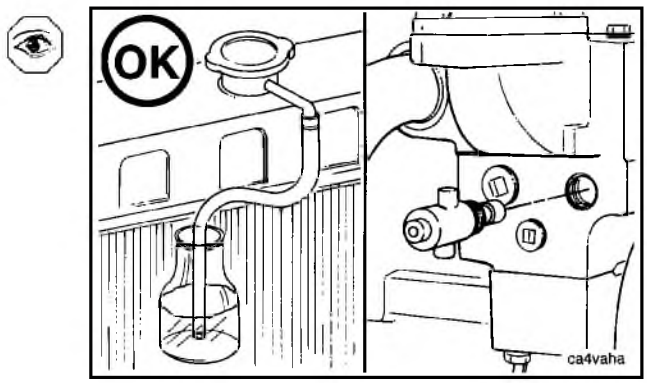


## Air Compressor Check

**NOTE:** The air compressor discharge must be disconnected at the compressor to allow the compressor to discharge air to the atmosphere, or external air pressure must be applied to the unloader valve to keep the air compressor unloaded, during this test. Do not run the engine over 5 minutes with the air compressor isolated from the cooling system. Component damage can result.

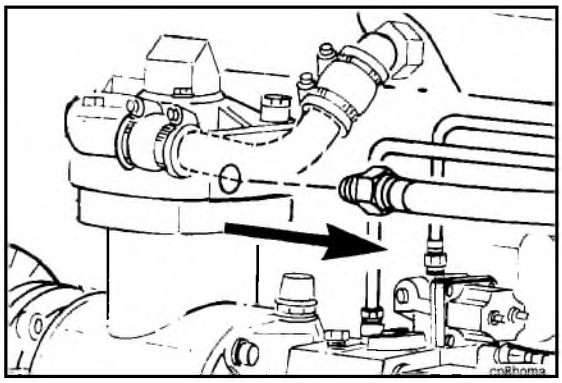

1. Disconnect and plug the coolant supply and coolant drain lines.
2. Repeat the test. If no air is found in the cooling system with the air compressor isolated, replace the air compressor head gasket. Refer to Procedure 04-14.

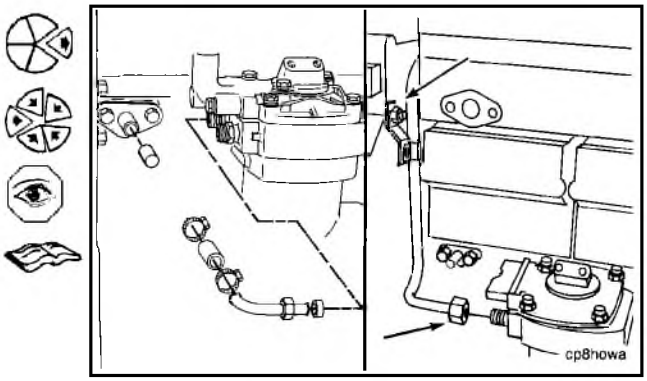

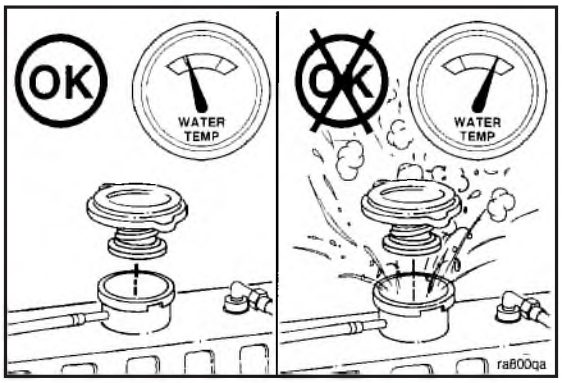


# Cooling System - Pressure Test (01-12)

**Warning: Wait until the temperature is below 50°C [120°F] before removing the coolant system pressure cap. Failure to do so can cause personal injury from heated coolant spray.**

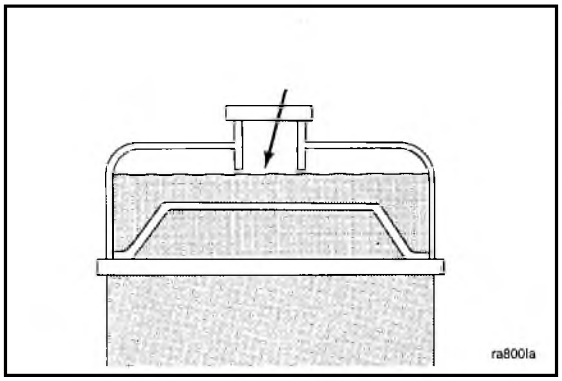


1. Check the coolant level and fill if necessary.

**NOTE:** If coolant is added, additional DCA4 (or equivalent) will be required. Refer to Procedure 01-09.

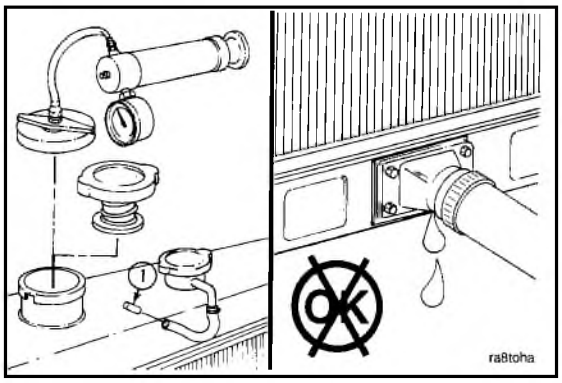


2. If the radiator is equipped with a pressure relief valve, install a plug in the overflow tube (1).

**Caution: Do not apply more than 140 kPa [20 PSI] air pressure to the cooling system. The water pump seal may be damaged.**

3. Install the pressure tester on the radiator fill neck or surge tank (if equipped), and apply 140 kPa [20 PSI] maximum air pressure.

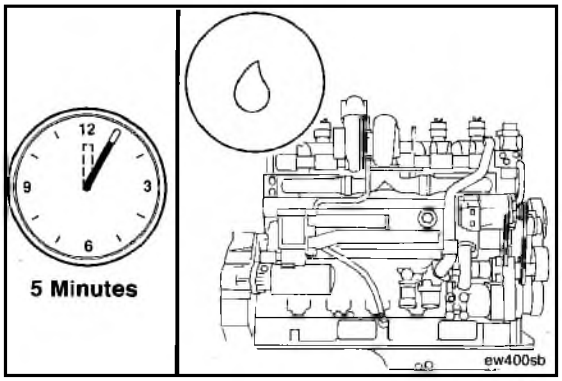


4. Maintain pressure for at least 5 minutes and check for leaks.

   If the pressure does not change, no external leaks are visible, and an internal leak is not suspected, go to step 15.

## Check for Internal Leaks

5. Check the oil cooler housing for coolant leakage. Remove the oil plugs from the cooler housing and check for coolant. If coolant is present, replace the oil cooler cores. Refer to Procedure 02-22.

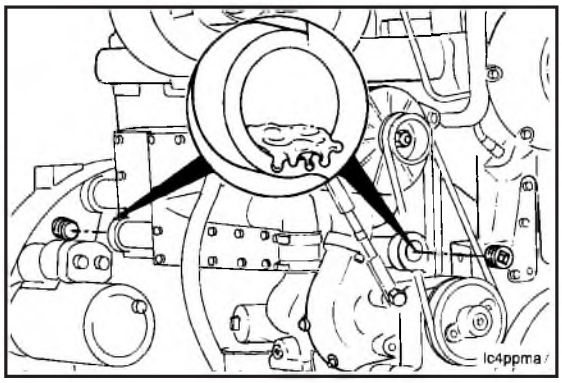


6. If the oil cooler cores are not leaking, drain the oil. Refer to Procedure 02-09. Check for coolant in the oil.
7. If the oil does not contain coolant, check the aftercooler, refer to step 11.

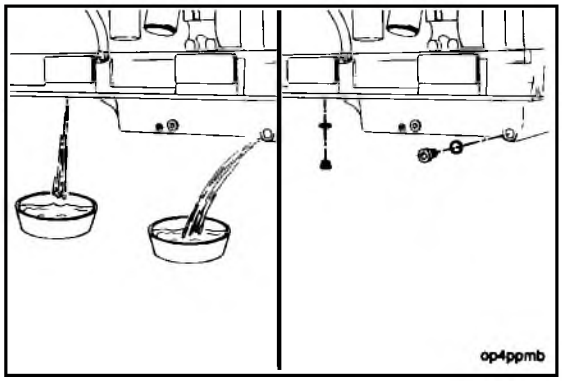


8. If the oil contains coolant, remove the sump and adapter cover. Refer to Procedure 02-16.

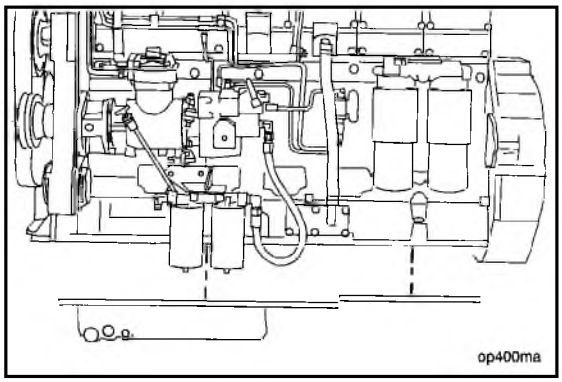


9. Check for leakage on the inside and the outside of the cylinder liner.
10. Replace all cylinder liners that are leaking. Refer to Procedure 07-26.

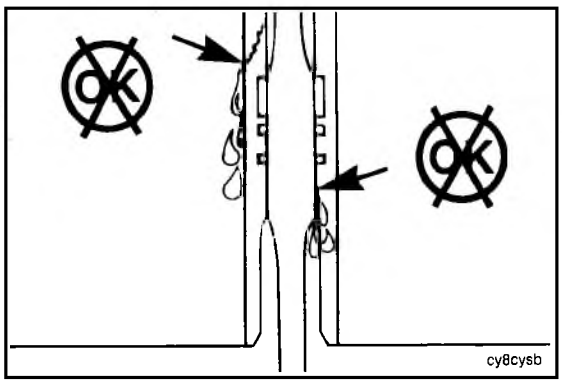

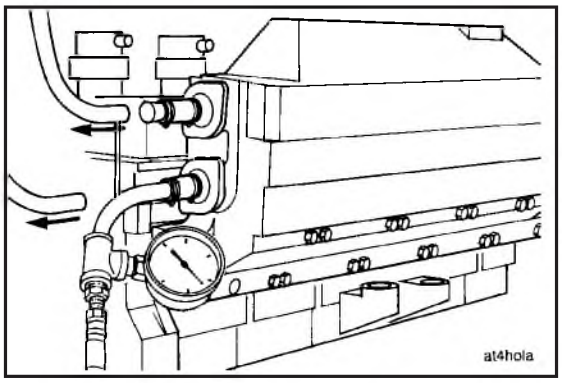


11. Disconnect the aftercooler coolant hoses. Plug one hose and apply 415 kPa [60 PSI] air pressure to the other hose. If the air pressure decreases, replace the aftercooler element. Refer to Procedure 03-18.

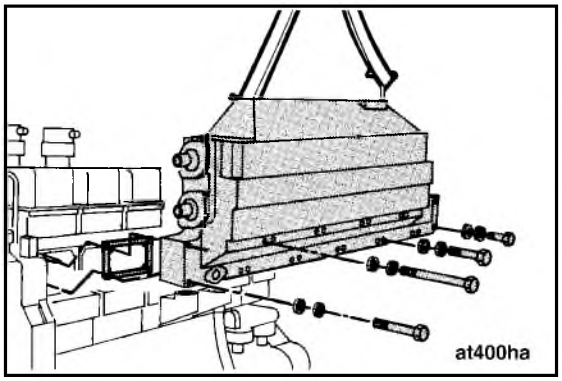


12. If the aftercooler element is not leaking, check the cylinder heads.
13. Remove the aftercooler housing. Refer to Procedure 03-17.

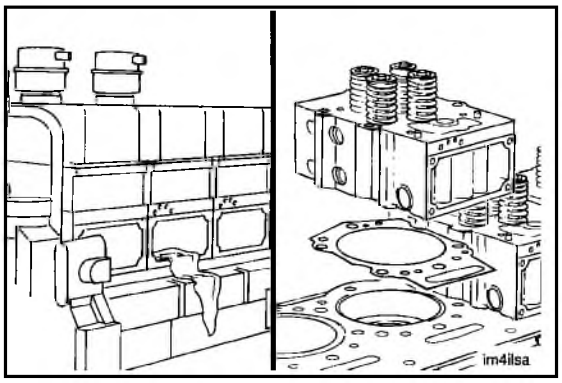


14. Check in the intake ports for coolant. To replace the cylinder head, refer to Procedure 07-14.

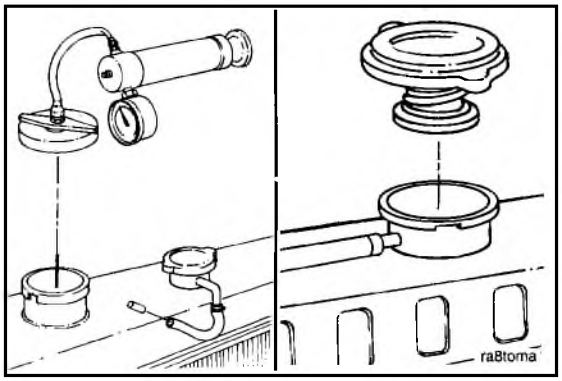


15. Remove the test equipment. Remove the plug from the overflow tube.
16. Replace the pressure cap.

## Hoses - Check (01-13)

**Caution: Do not bend or deform the hoses during inspection. This can cause the hoses to crack.**

1. Inspect all hoses for cracks or cuts.
2. Inspect all hoses for signs of ballooning or collapsing.

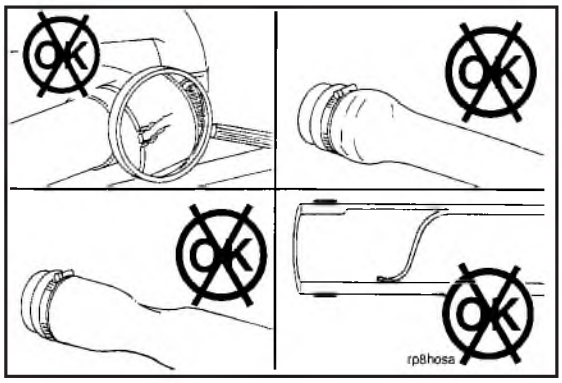


**NOTE:** Engine overheating or coolant overflow can result from internal deterioration of the coolant hoses. Refer to the Coolant Temperature Above Normal Troubleshooting Logic Chart. Particles of deteriorated hose can restrict or completely stop the coolant flow.

## Coolant Temperature Gauge - Check (01-14)

1. Check for a blown fuse.
2. Check the wiring from the gauge to the sending unit for a broken connection.

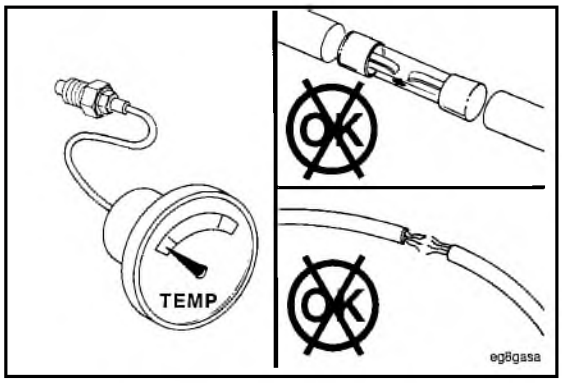


3. Use a temperature gauge of known accuracy to check the existing gauge.
4. Replace a faulty gauge.

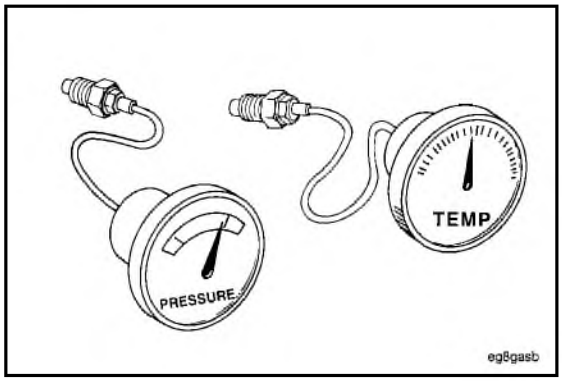

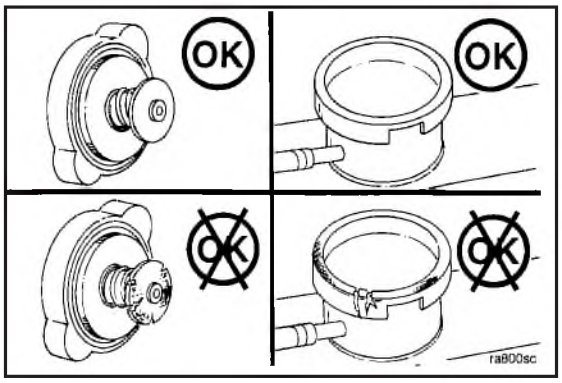


## Radiator Pressure Cap - Check (01-15)

1. Visually inspect the rubber seal of the pressure cap for damage.
2. Visually inspect the radiator fill neck for cracks or other damage.
3. Refer to the radiator manufacturer's instructions if the fill neck is damaged.

**NOTE:** Make sure the correct radiator cap is being used. The pressure rating must be 48 kPa [7 psi] or greater.

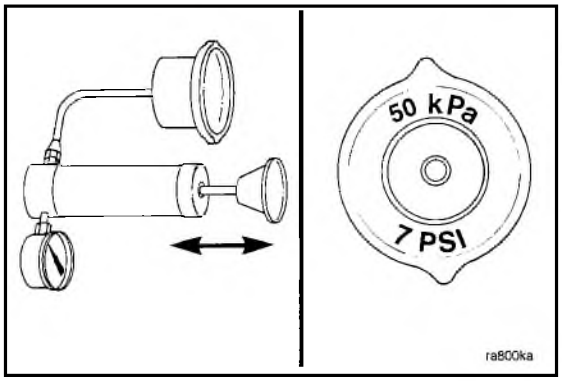


4. Pressure test the radiator cap.
5. The pressure cap must seal within 14 kPa [2 PSI] of the value stated on the cap, or it must be replaced.

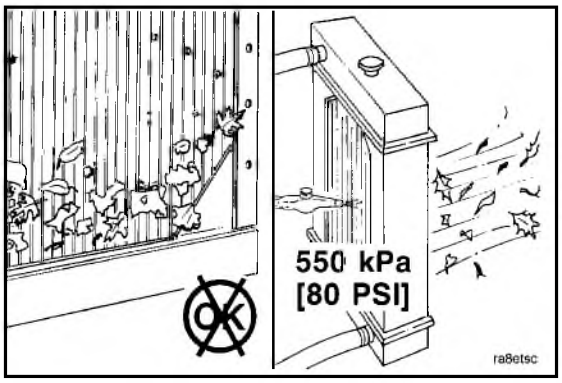


## Radiator Fins - Inspect (01-16)

1. Visually inspect the radiator for plugged radiator fins.
2. Use 550 kPa [80 PSI] air pressure to blow the dirt and debris from the fins. Blow the air in the opposite direction of the fan air flow.

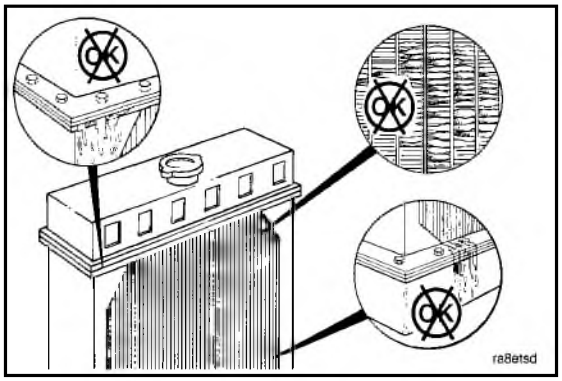


3. Visually inspect the radiator for bent or broken fins.

**NOTE:** If the radiator must be replaced due to bent or broken fins, refer to the manufacturer's replacement Procedures.

4. Visually inspect the radiator for core and gasket leaks.

# Radiator Baffle Leakage - Check (01-17)

1. Open the draincock on the bottom of the radiator and remove the lower radiator hose to drain the cooling system.

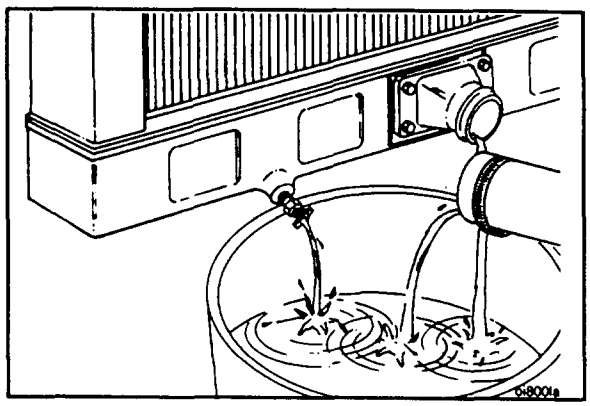

2. Fill the top tank to within 50 mm [2 inch] of the top with water.
3. If the level drops and leakage is observed from the draincock and the lower radiator outlet, the baffle is leaking. The radiator must be repaired or replaced.

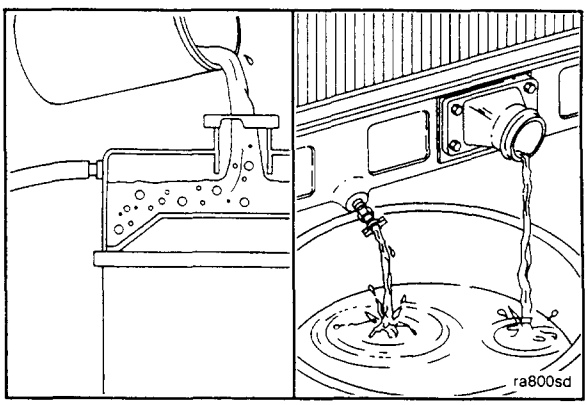


# Radiator - Check For Reverse Flow (01-18)

**Note:** This test must be performed with the cooling system completely full and the coolant at ambient temperature.

1. Operate the engine at medium to high idle. Since the thermostats are closed, coolant flow is through the bypass line (1) and the engine (2).

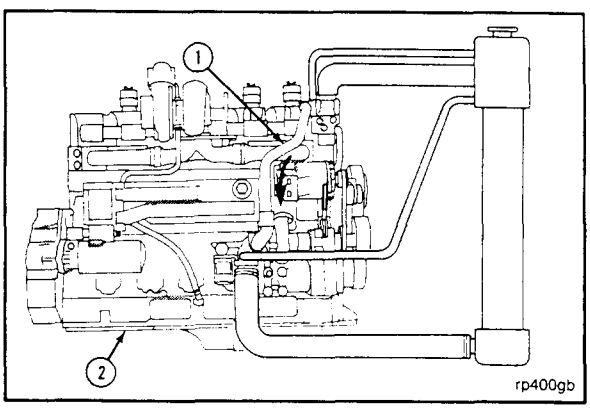


2. As the engine is warming up, use your hands or a contact pyrometer to check the temperature of the radiator top and bottom tanks.

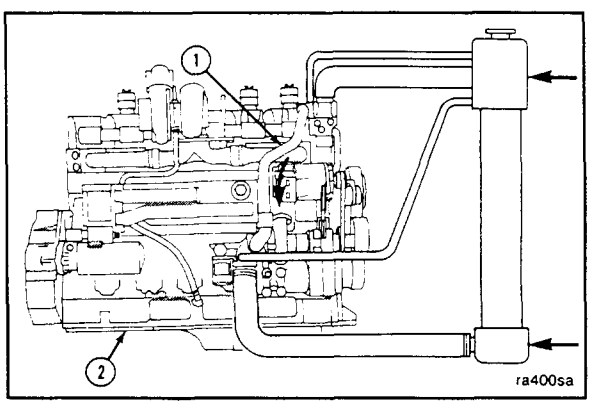

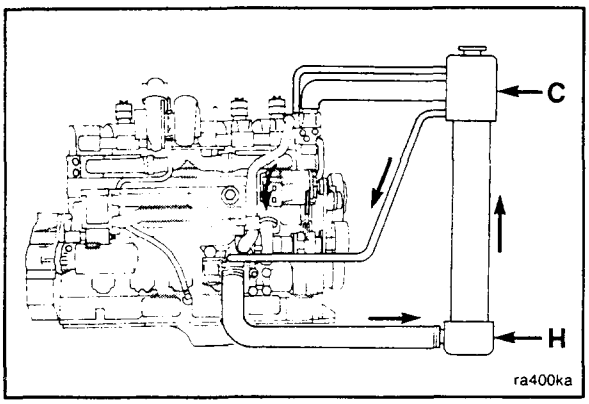


3. If the bottom tank begins to warm to the touch and the top tank remains cold, the radiator has reverse flow. Refer to the manufacturer's instructions for repair Procedures.
4. Check the piping to be sure it is the correct size and routed per specifications. Refer to the appropriate Installation Recommendation Bulletin.

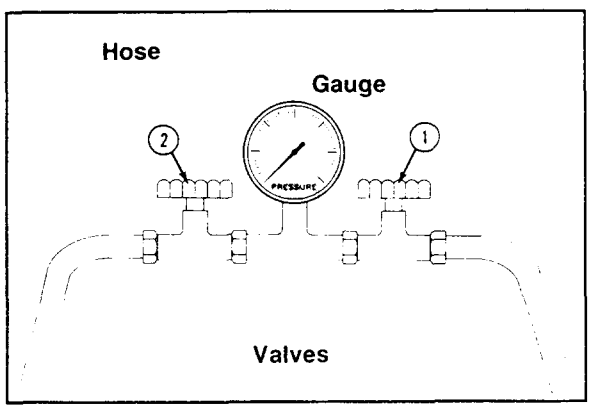


## Radiator - Check for Obstruction (01-19)

1. Use a pressure gauge designed to measure 0-100 kPa [0-15 psi]. Install a valve on each side of the gauge.

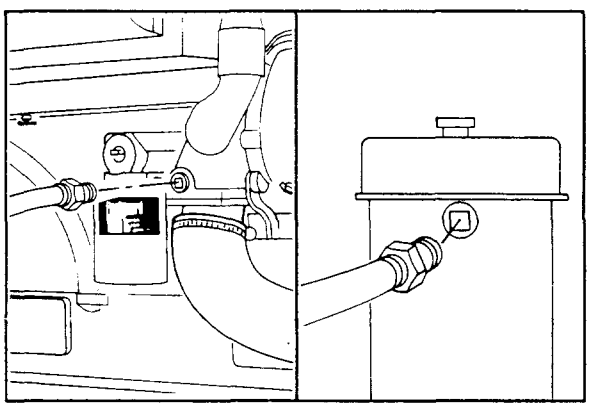

2. Install line "1" into the water pump inlet connection and line "2" into the thermostat return line or on top of the radiator core.

   Bleed the air from the gauge lines.

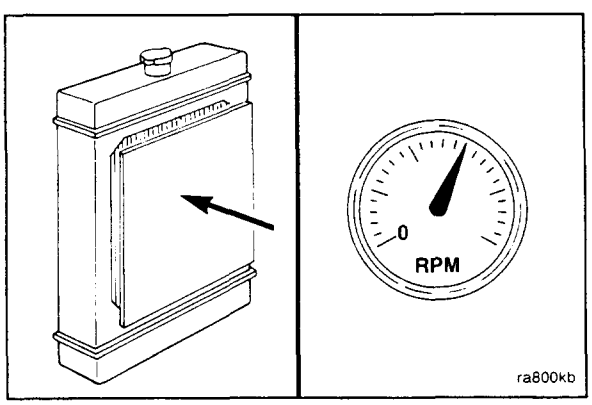


3. Restrict the radiator air flow. Operate the engine until the coolant temperature reaches 88-90°C [190-195°F].

4. Operate the engine at rated RPM.
   a. Close valve "1" and open valve "2". Record the pressure at the top of the radiator.

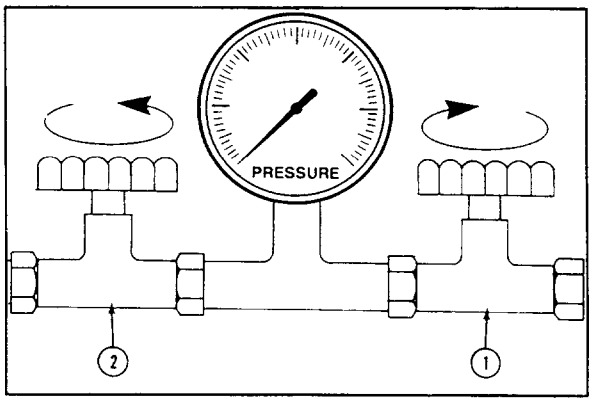


   b. Close valve "2" and open valve "1". Record the pressure at the water pump inlet.
   c. Compare the two pressure readings. If they differ by more than 35 kPa [5 psi], the radiator core or piping is obstructed.

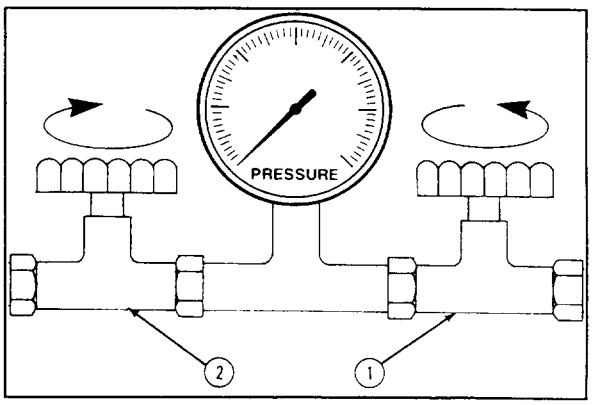


## Shutter Operation - Check (01-20)

1. The shutters will be fully closed when the vehicle air pressure reaches approximately 380 kPa [55 psi]. They will remain closed until the coolant temperature reaches the value stamped on the control.

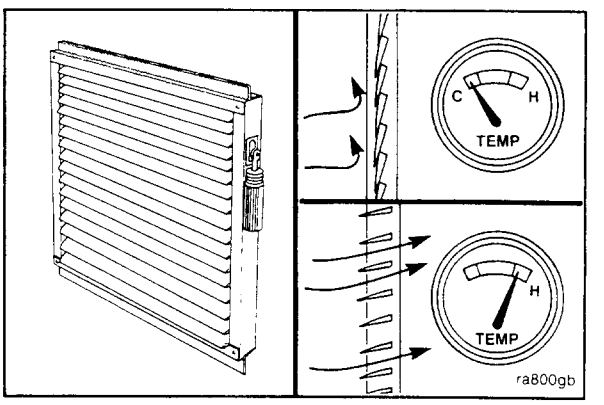


2. Install a reference temperature gauge which is known to be accurate in the thermostat housing. A thermocouple may be used.

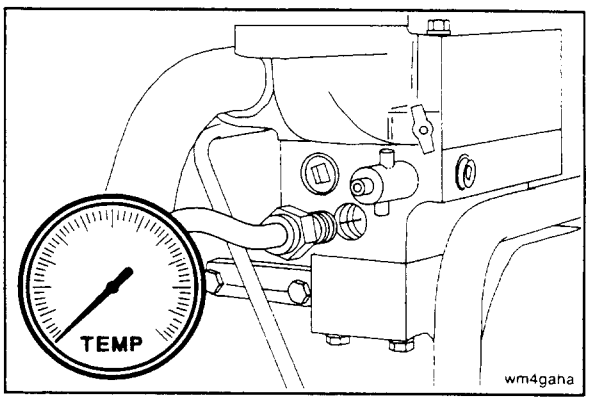

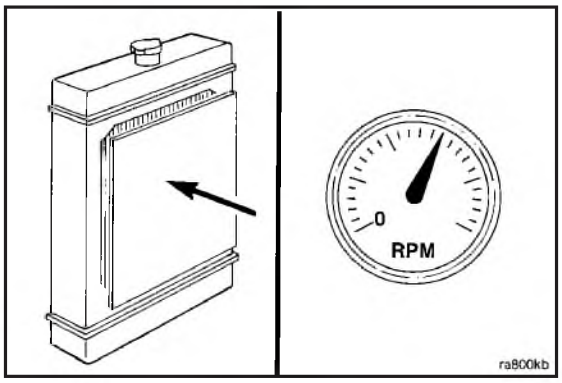


3. Restrict the radiator air flow.
4. Operate the engine at rated RPM.

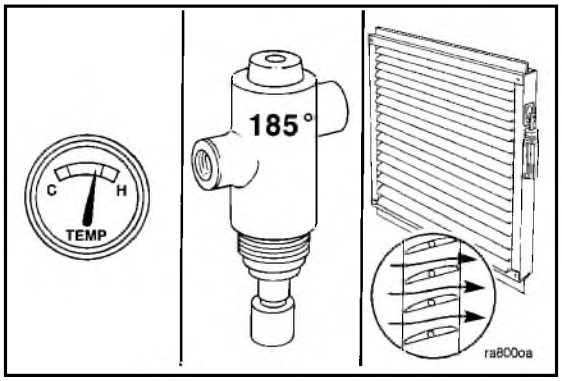

5. When the coolant temperature reaches the temperature stamped on the control, check the shutters to see if they are open. The shutters must be fully open.

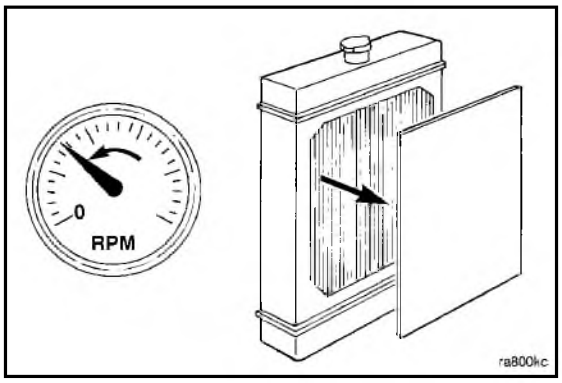

6. Return the engine to idle, and remove the radiator air restriction.

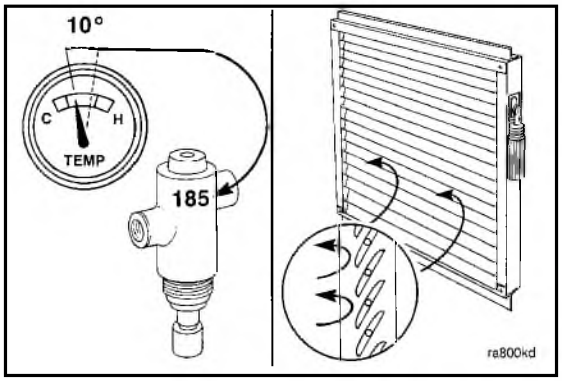

7. When the coolant temperature drops to approximately 6°C [10°F] below the temperature stamped on the control, the shutters will be fully closed.

8. If the shutters do not operate correctly, refer to the shutter manufacturer's instructions.

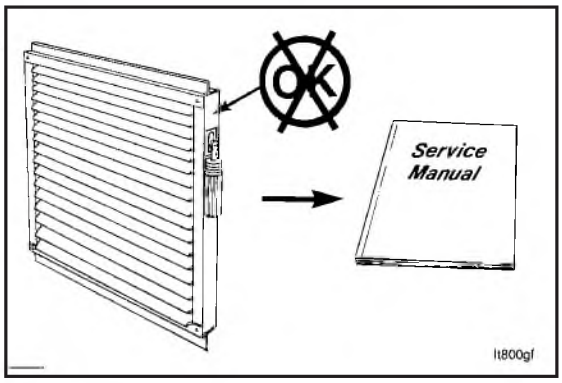


## Fan, And Fan Shroud - Inspect (01-21)

### Fan

**Warning: Do not rotate the engine by pulling or prying on the fan. Do not straighten a bent fan blade or continue to use a damaged fan. A bent or damaged fan blade can fail during operation and cause serious personal injury or property damage.**

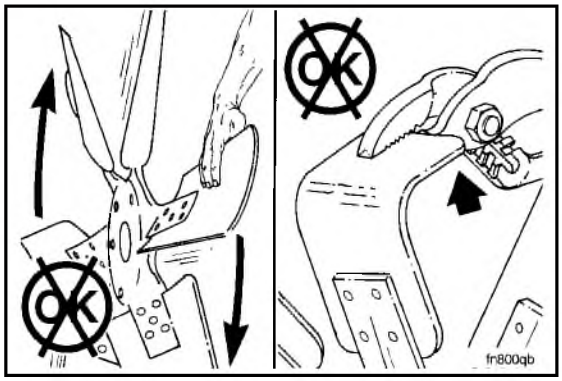


**NOTE:** Replace the original equipment fan with a fan of the identical part number. Cummins Engine Company, Inc. must approve any fan change.

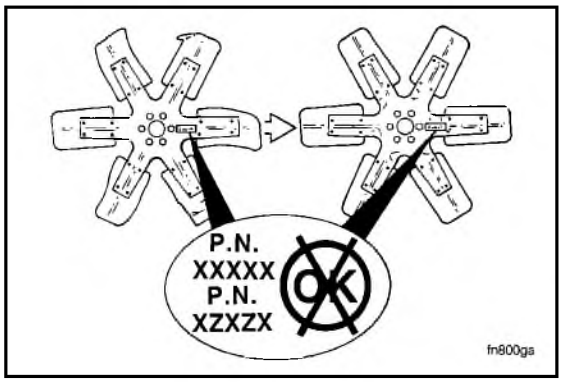


1. Visually check the fan for cracks, loose rivets, and bent or loose blades. Check the fan to make sure it is securely mounted. Tighten the capscrews if necessary. Replace damaged fans.

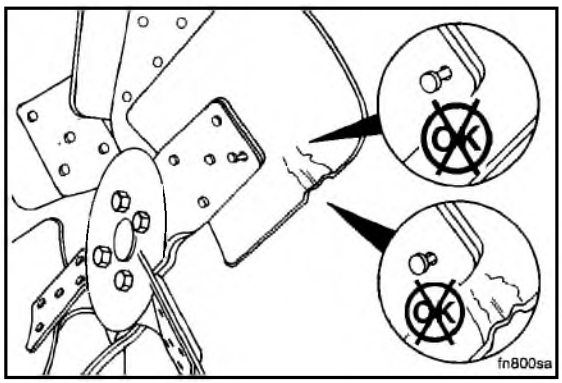

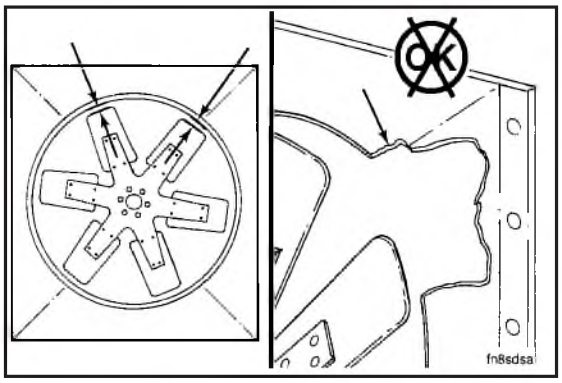


## Fan Shroud

1. Inspect the fan shroud for the correct fan clearance. Refer to the vehicle manufacture's specifications and the appropriate installation recommendations bulletin.
2. Visually inspect the shroud for cracks, air leaks, or other damage. Replace it if necessary. Refer to the manufacturer's instructions.

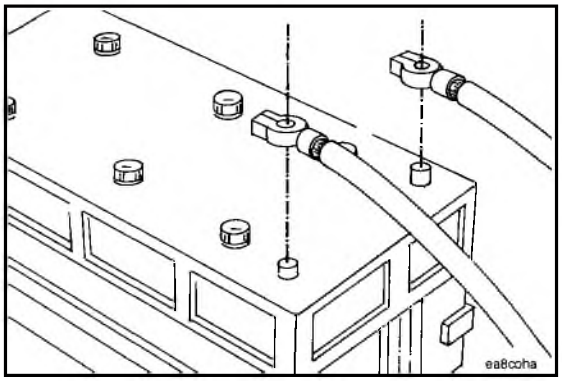


# Fan - Replace (01-22)

## Remove

1. Disconnect the batteries or air supply line to the air starter to prevent accidental engine starting.

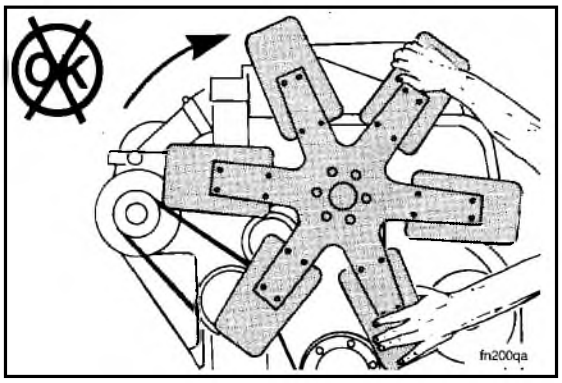


**Caution: Do not pull or pry on the fan. The fan blades can be damaged.**

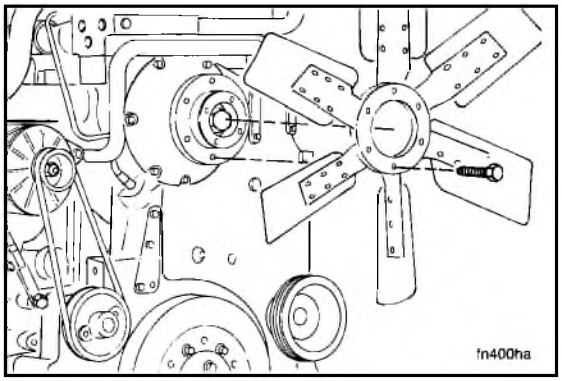


2. Remove the fan.

## Install

**Caution: Replace the original equipment fan with a fan of the identical part number. Cummins Engine Co., Inc. must approve any fan changes.**

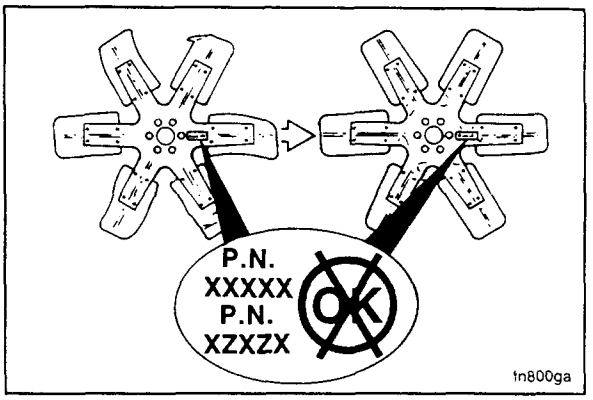


1. Install the fan.
2. Tighten the mounting capscrews to 135 N•m [100 ft-lbs] torque.

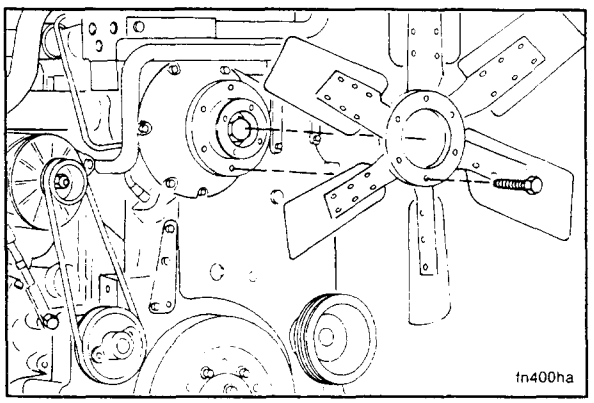


3. Connect the batteries or air starter supply line.

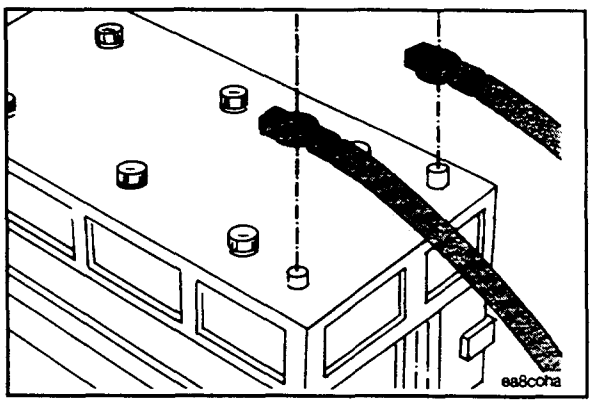


# Fan Belt - Replace (01-23)

## Remove

**Caution: The fan belt idler is under tension. Do not allow your hands to get between the idler and the belt, or the fan hub. Personal injury can result.**

1. Use an 8-point socket and breaker bar or large wrench. Hold the idler in position against the spring tension and remove the capscrew.
2. Slowly turn the wrench until the spring tension is relieved.

   Spring Tension: 35 N•m [45 ft-lb]

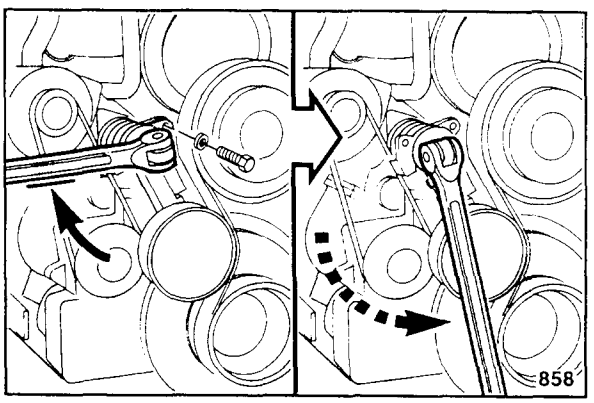

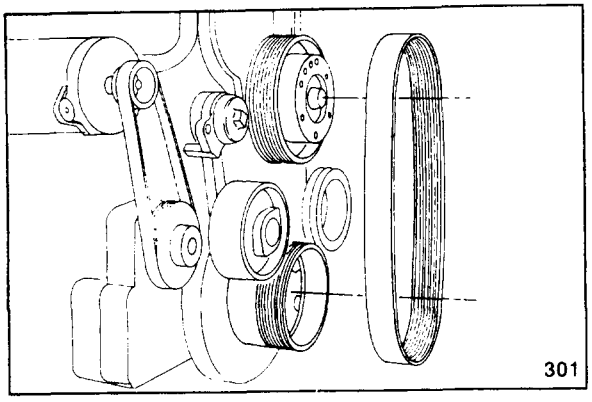


3. Remove the fan belt.

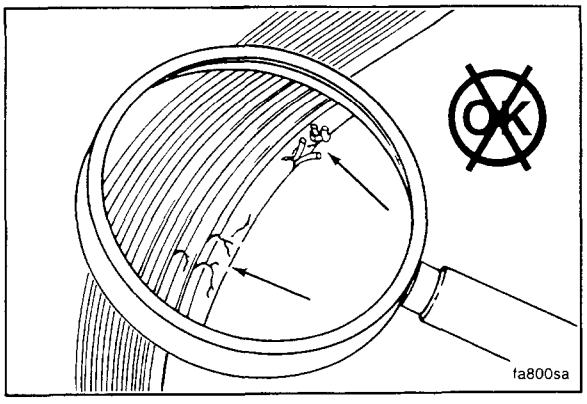


## Check For Reuse

1. Visually inspect the belt for:
   - Cracks
   - Glazing
   - Tears or cuts

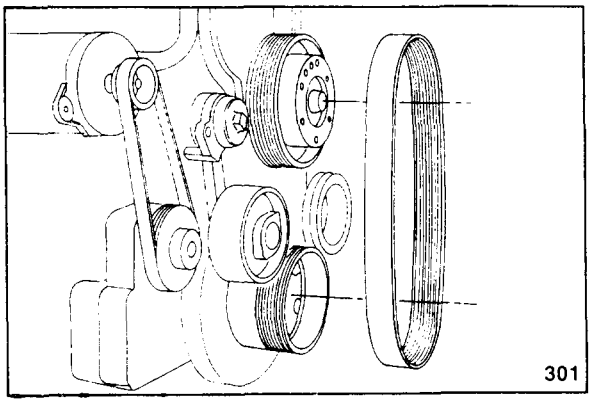


## Install

**Caution: Be sure the fan idler spring tension is released.**

1. Install the belt.

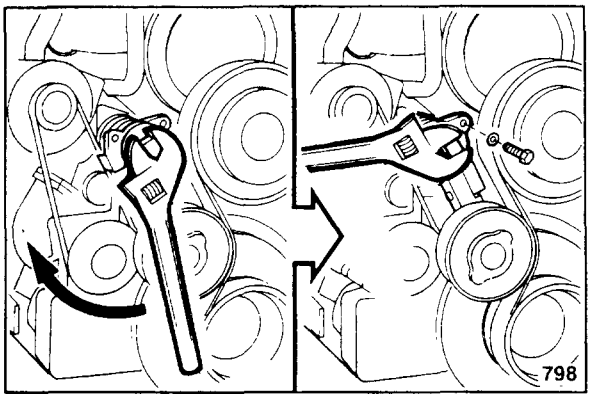


2. Rotate the idler against the spring tension until the capscrew holes are aligned. Install the capscrew.
3. Tighten the capscrew to 45 N•m [35 ft-lb].
4. Slowly turn the wrench until the idler is against the belt.

# Fan Clutch - Check Operation (01-24)

1. This Procedure assumes that the fan is not turning at the correct RPM. Refer to Procedure 01-25 to check.

   At idle, on a cold engine, the fan should turn less than 350 RPM. At idle, on a hot engine, the fan should turn at the correct ratio to engine speed.

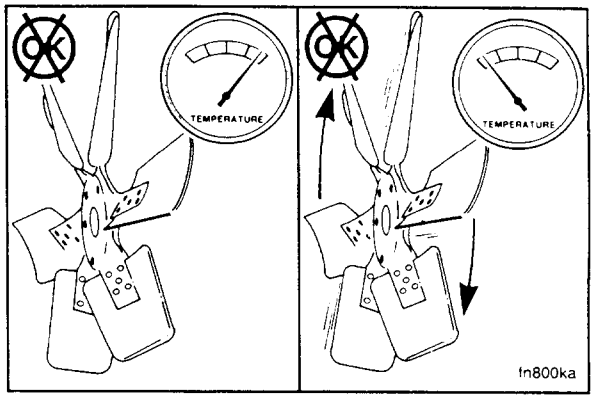


2. Install a master temperature gauge which is known to be accurate in the thermostat housing.

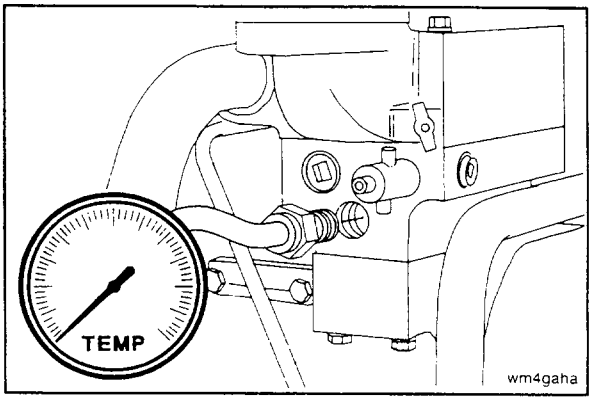


**Note:** On a cold engine there should be air pressure in the line between the thermal control valve and the fan clutch.

3. Remove the air pressure from the tank that supplies air to the control valve.
4. Install a pressure gauge in the line between the thermal control valve and the fan clutch.

**Note:** The gauge must have a minimum capacity of 1035 kPa [150 psi].

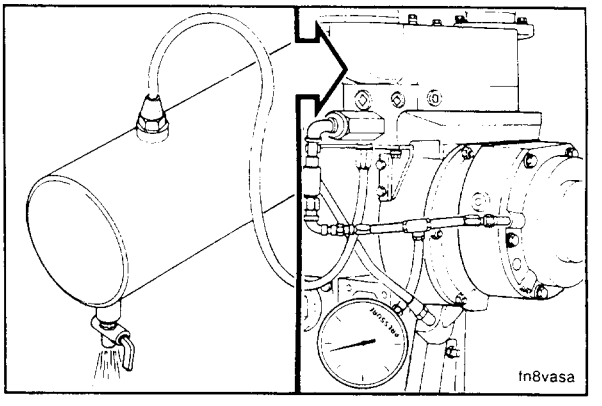


5. If the complaint is engine coolant above normal (fan clutch not engaged), perform step 10.
6. If the complaint is engine coolant below normal (fan clutch engaged), perform steps 7,8, and 9.

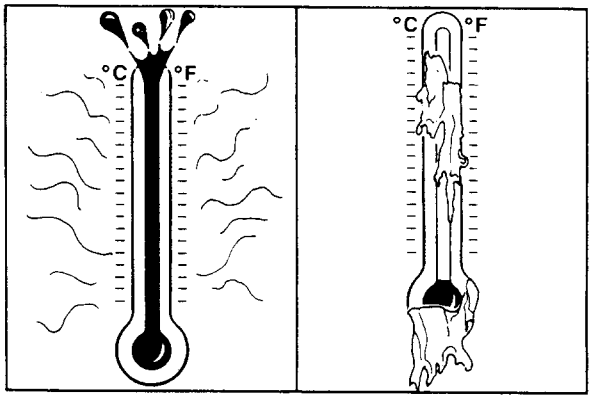

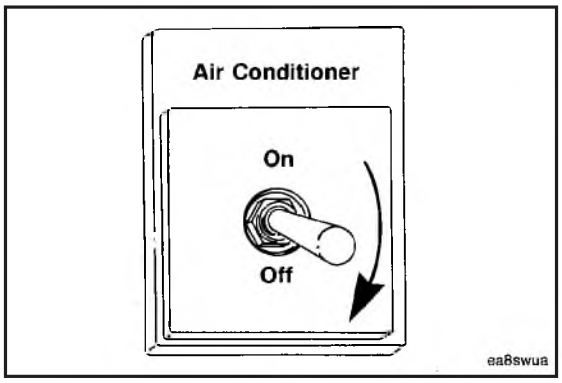


7. If the vehicle is air-conditioned, make sure the air-conditioning is turned off to prevent continuous operation of the fan.

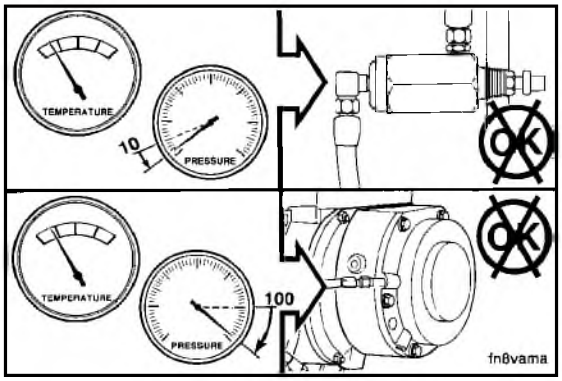


8. Operate the engine and read the pressure gauge. If the air pressure is less than 69 kPa [10 psi] replace the thermal control valve.

   If the air pressure is more than 690 kPa [100 psi] replace the fan clutch.

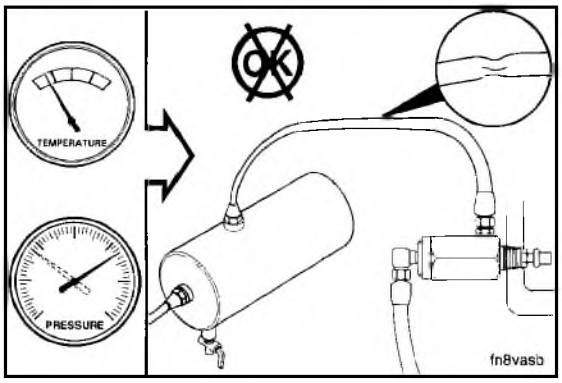


9. If air pressure is more than 83 kPa [12 psi] but less than 690 kPa [100 psi], the air supply line is restricted. Check the air line for a restricted component.

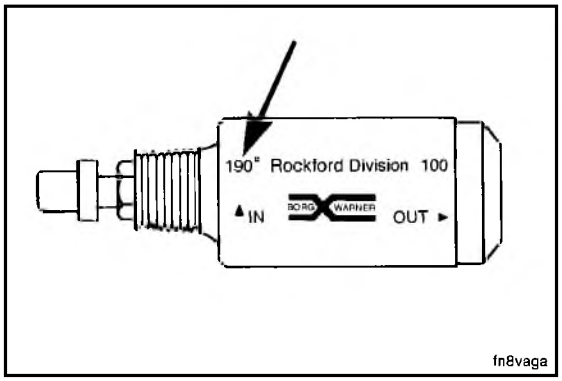


10. Note the temperature setting stamped on the thermal control valve.

    This temperature must be at least 5° higher than the engine thermostats (standard thermostats are 185°F).

    If shutters are installed in the system, this temperature must be 5°F higher than the temperature on the shutter control.

11. Restrict the radiator air flow. Operate the engine until the coolant temperature rises to the temperature stamped on the thermal control valve.

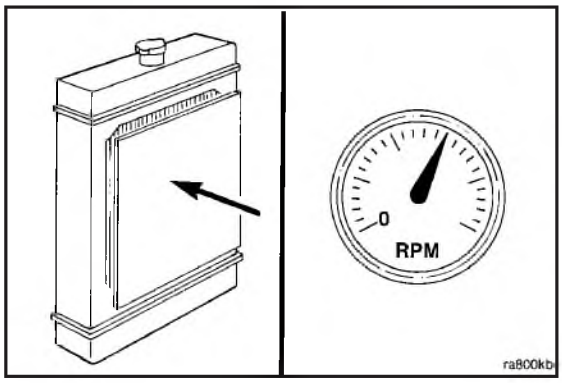


12. Continue to operate the engine allowing the coolant temperature to rise another 7°F. The air pressure should decrease, smoothly to less than 34 kPa [5 psi].

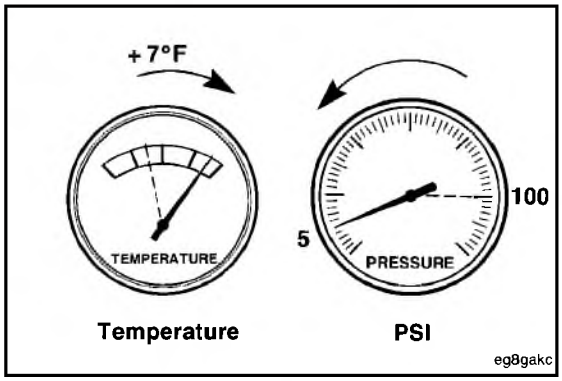


13. If the air pressure decreases to less than 34 kPa[5 psi], replace the fan clutch.

    If the air pressure is more than 34 kPa [5 psi], replace the thermal control valve.

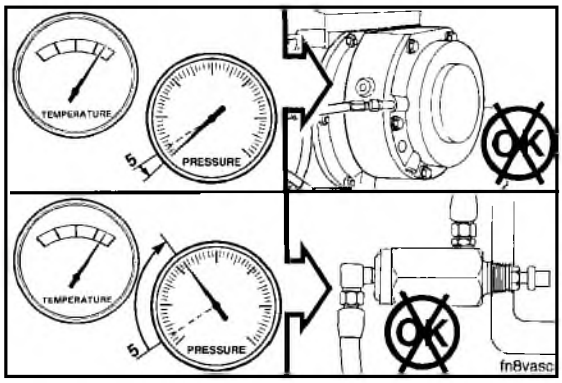


14. Check to be sure the tip of the thermal control valve is in the coolant. Do not use a reducer bushing when installing the valve. As shown in the illustration, this will prevent the tip of the valve from contacting the coolant.

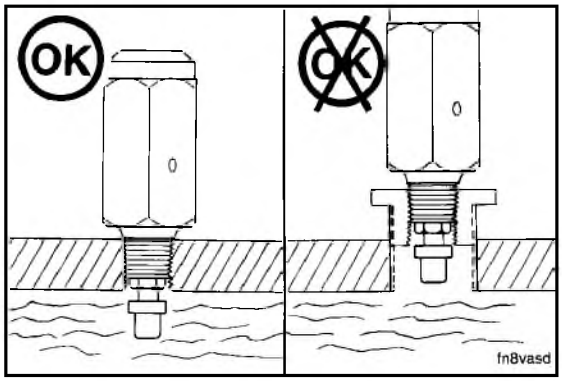

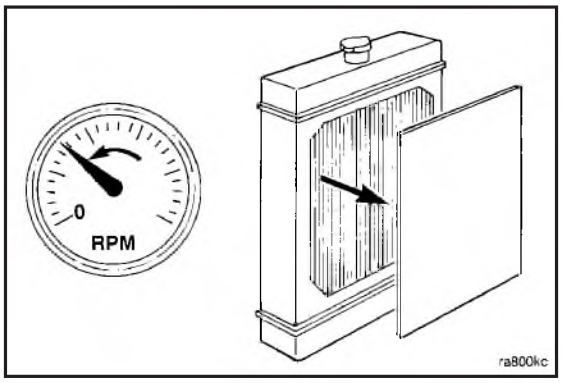


15. Remove the radiator cover. Operate at idle for 3 - 5 minutes to allow the engine to cool down.

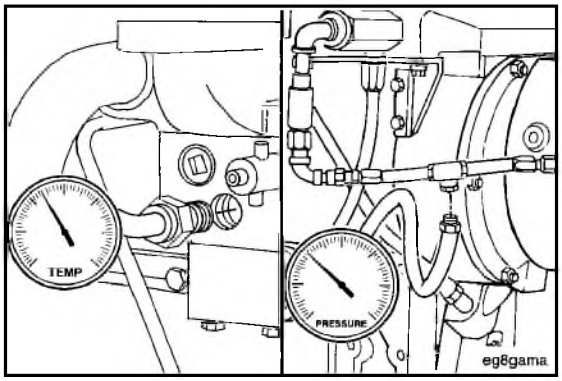


16. Remove the test components.

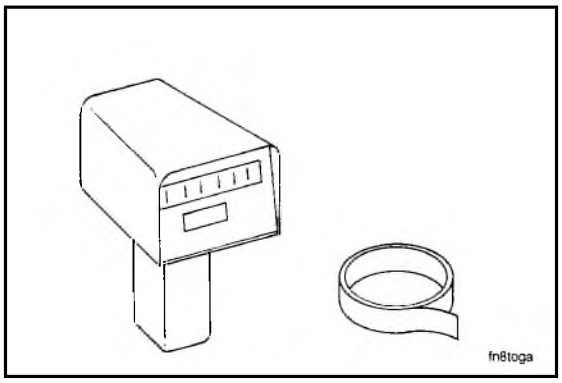


## Fan RPM - Check (01-25)

1. Use an optical tachometer, Part No. 3377462, or a strobe light to measure fan RPM.

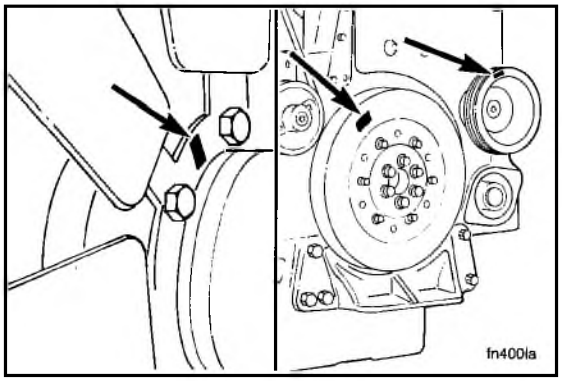


2. Mark a spot on the fan, so the fan RPM can be measured.
3. Mark another spot on the vibration damper or accessory drive pulley to measure engine RPM

**NOTE:** When using the Cummins optical tachometer, use a piece of reflective tape, Part No. 3377464, to mark the part.

**NOTE:** The fan center distance is the distance between the center of the fan and the center of the crankshaft.

4. Measure the fan center distance or the fan pulley diameter to determine the fan ratio.

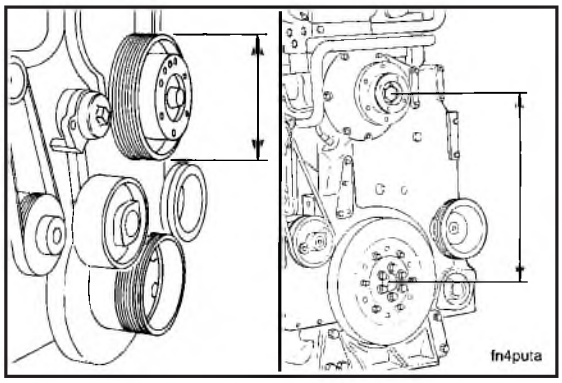


5. Operate the engine. Read and compare the fan RPM to specifications.

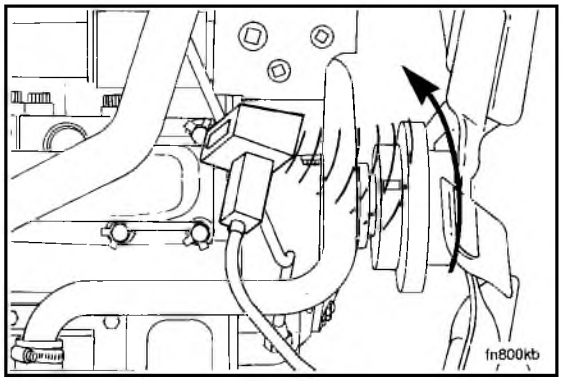


| Belt Driven Fan | |
|---|---|
| **Fan Pulley Diameter** | **Fan RPM** |
| 239 mm [9.4 in] | .85 x engine RPM |
| 289 mm [11.4 in] | .70 x engine RPM |
| 338 mm [13.3 in] | .60 x engine RPM |

| Gear Driven Fan | |
|---|---|
| **Fan Center Distance** | **Fan RPM** |
| 512 mm [20.16 in] | 1.00 x engine RPM* |
| 523 mm [20.6 in] | .84 x engine RPM |
| 512 mm [20.16 in] | .70 x engine RPM* |

* The .70:1 ratio fan hub has the shaft offset from the engine centerline 38 mm [1.5 inch] towards the water pump. The 1:1 ratio fan hub is on the engine centerline.

6. If the fan RPM is not correct, check the following:
   - Belt
   - Viscous fan element
   - Fan clutch thermal control valve, refer to Procedure 01-24.

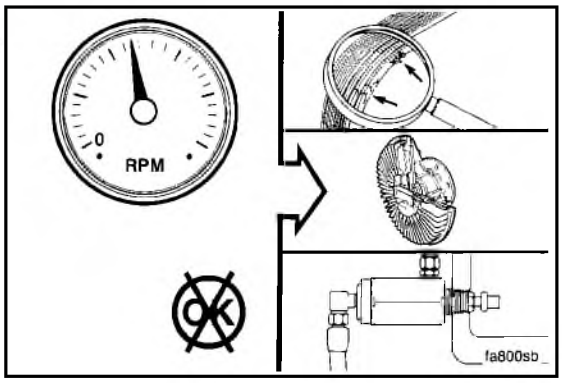

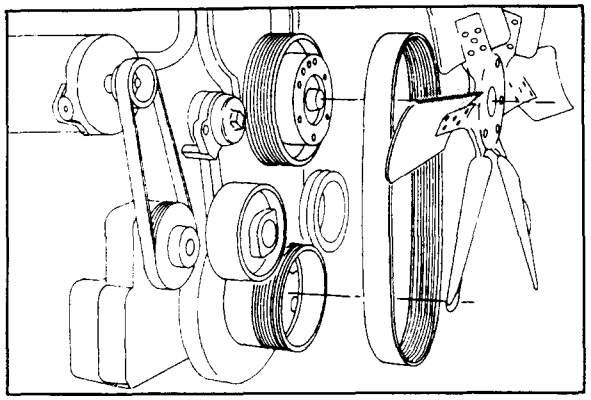

# Fan Hub (Belt Driven) - Replace (01-26)

## Remove

1. Remove the fan. Refer to Procedure 01-21.
2. Remove the fan belt. Refer to Procedure 01-22.

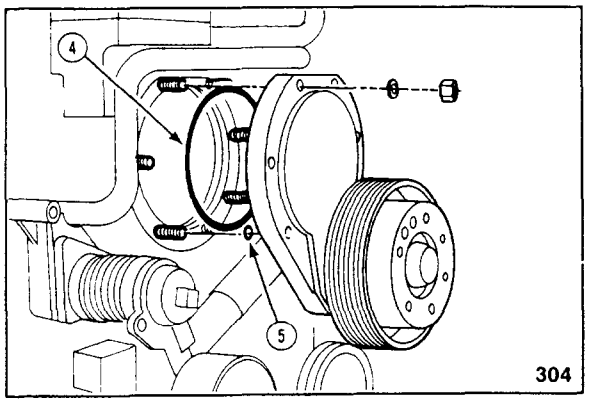


**Caution: This assembly weighs more than 23 kg [50 lb]. Personal injury can result.**

3. Remove the seven nuts and the fan hub.
4. Remove the o-ring (4) and the seal (5). Discard the o-ring and seal.

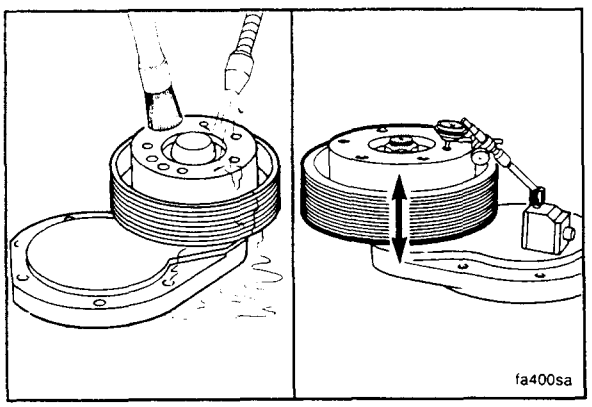


## Check For Reuse

1. Clean and check the fan hub for reuse. Rotate the pulley to check for rough or damaged bearings.
2. Check bearing end clearance.

| Bearing End Clearance | | |
|---|---|---|
| mm | | in |
| 0.08 | MIN | 0.003 |
| 0.41 | MAX | 0.016 |

3. Check the grease seals for damage.

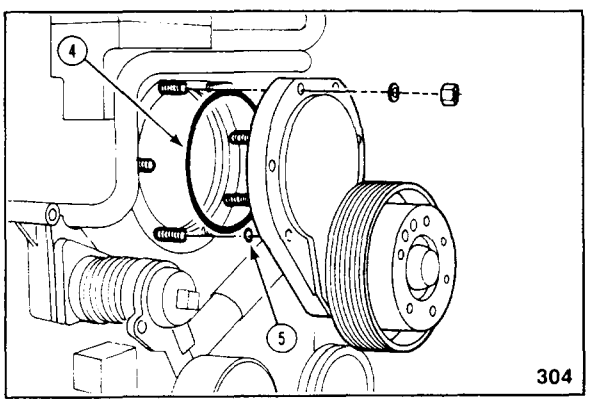


## Install

**Note:** If the studs have been changed check the protrusion.

| Stud Protrusion from Cover | | |
|---|---|---|
| mm | | in |
| 50.17 | MIN | 1.975 |
| 51.44 | MAX | 2.0251 |

1. Use vegetable oil and lubricate the o-ring (4) and seal ring (5). Install the o-ring and seal ring in the fan hub.
2. Install the fan hub, the seven lock washers and nuts. Tighten the capscrews to 35 N•m [25 ft-lb].

3. Install the fan belt. Refer to Procedure 01-23.
4. Install the fan. Refer to Procedure 01-22.

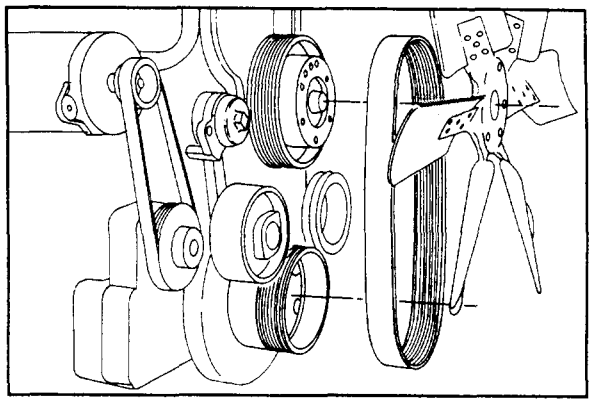

## Fan Hub (Gear Driven) - Replace (01-27)

### Remove

1. Remove the fan. Refer to Procedure 01-22.

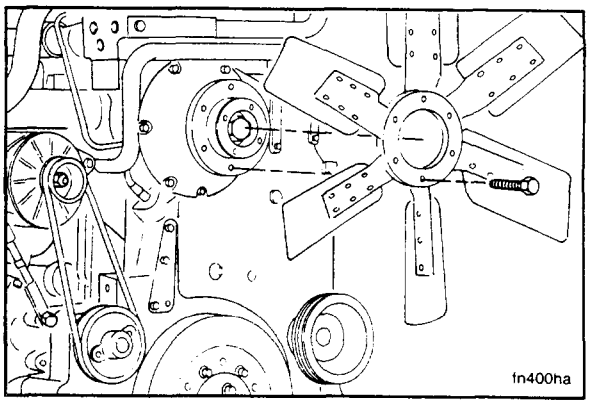


**Caution: This assembly weighs more than 23 kg [50 lb]. Handle securely to avoid dropping.**

**Note:** Two of the capscrews contain a nut on the back side of the gear cover plate.

2. Remove the capscrews, nuts and fan hub. Remove and discard the gasket.

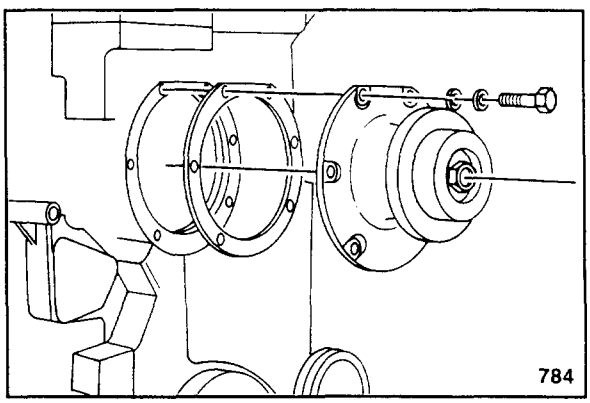


### Check For Reuse

1. Clean and check the fan hub for reuse. Rotate the hub and check for rough bearings.
2. Check bearing end clearance.

| Bearing End Clearance | | |
|---|---|---|
| mm | | in |
| 0.08 | MIN | 0.003 |
| 0.25 | MAX | 0.010 |

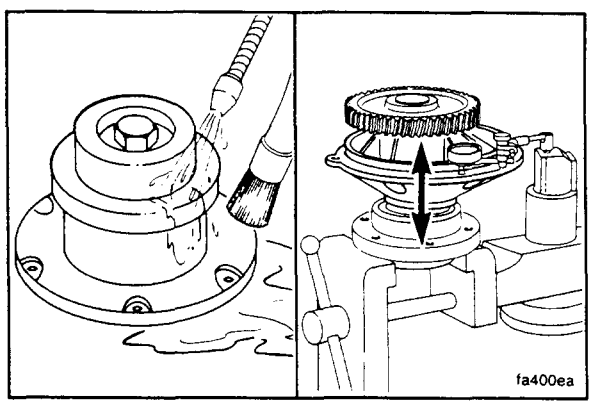

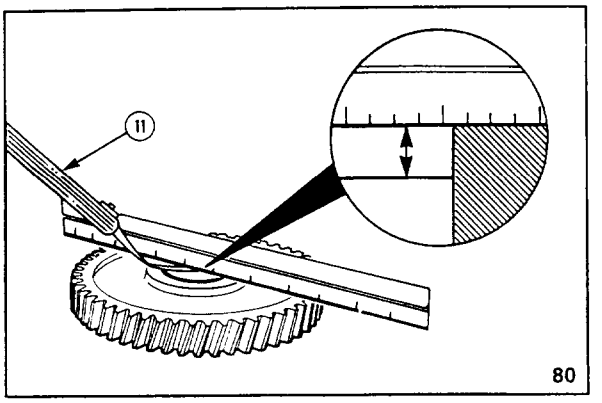


3. Use a feeler gauge (11) and measure the shaft depth in the gear.

| Gear Shaft Depth | | |
|---|---|---|
| mm | | in |
| 0.00 | MIN | 0.000 |
| 0.51 | MAX | 0.020 |

**Note:** If the shaft depth is not within specifications, replace the shaft and gear as an assembly. The bearing assembly must be replaced if the shaft and gear are replaced. Refer to the K19 Shop Manual.

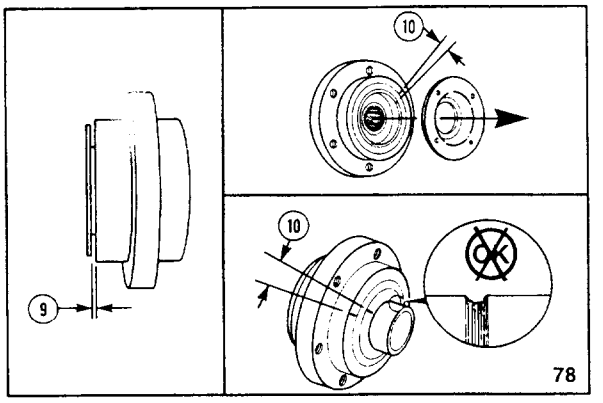


**Note:** Some hubs require the removal of the retainer before checking the index marks.

| Retainer to Hub Clearance | | |
|---|---|---|
| mm | | in |
| (9) 2.5 | MIN | 0.10 |

| Index Mark Misalignment | | |
|---|---|---|
| mm | | in |
| (10) 3.3 | MAX | 0.13 |

4. Check for wear at the seal location.

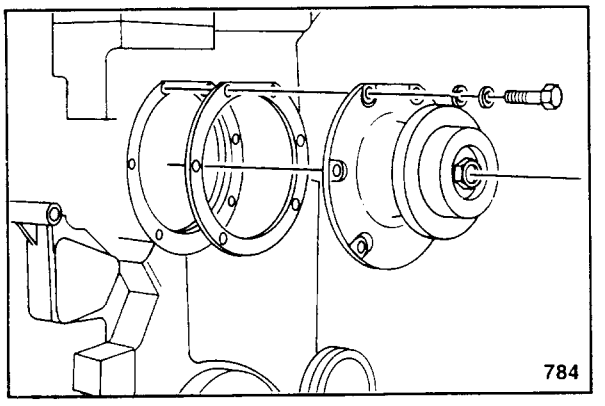


## Install

**Note:** For operation and installation of a clutch driven assembly, reference Bulletin No. 3387082, K-1150 Fan Clutch Operation and Installation.

**Note:** The hole in the gasket for the oil passage must be aligned with the oil hole in the cover.

1. Install the gasket, fan hub and capscrews. Tighten the capscrews to 45 N•m [35 ft-lb].

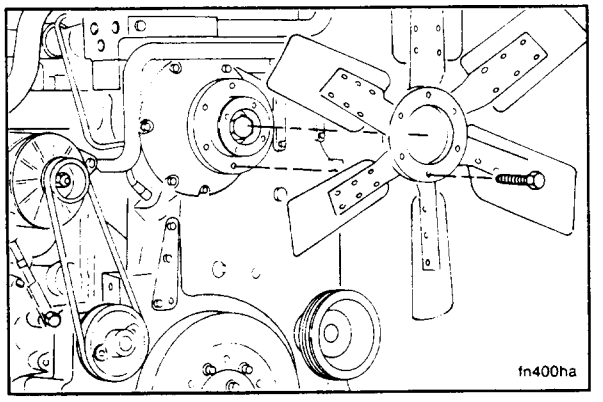


2. Install the fan. Refer to Procedure 01-22.

# Fan Hub Idler And Shock Absorber (Or Turnbuckle) - Replace (01-28)

## Remove

1. Loosen the adjusting link and the alternator mounting capscrews.

**Note:** The lower jam nut is left-hand threads.

2. Loosen both of the jam nuts. Turn the adjusting screw to relieve the belt tension.
3. Remove the alternator belt.

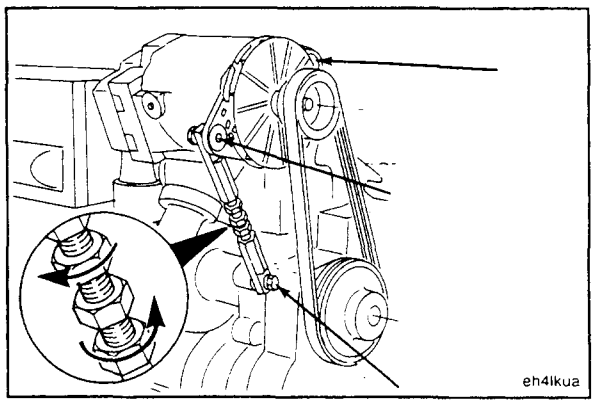


4. Remove the fan belt. Refer to Procedure 01-23.

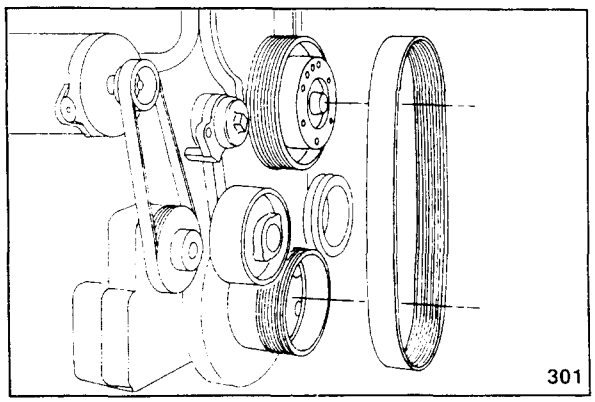


**Caution: This assembly weighs more than 23 kg [50 lb]. The shock absorber and the pivot arm assembly will rotate during removal. Personal injury can result.**

5. Remove the capscrew and spacer from the shock absorber. Remove the three capscrews from the pivot arm assembly.
6. Remove the pivot arm and the shock absorber as an assembly.

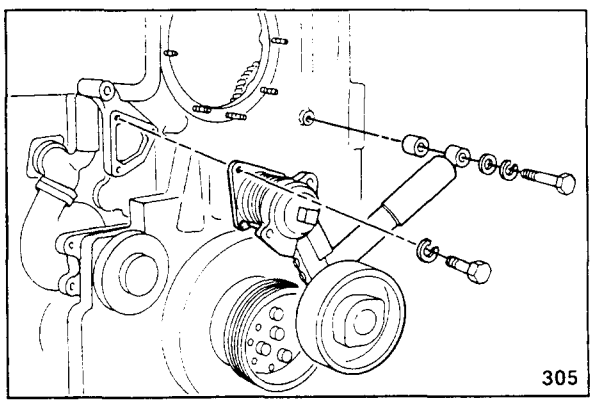


7. Remove the shock absorber from the pulley assembly.

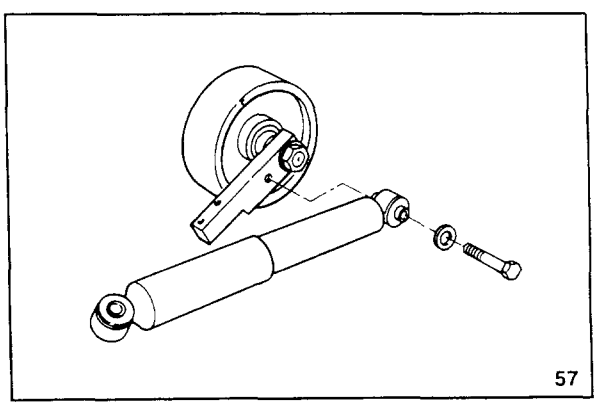

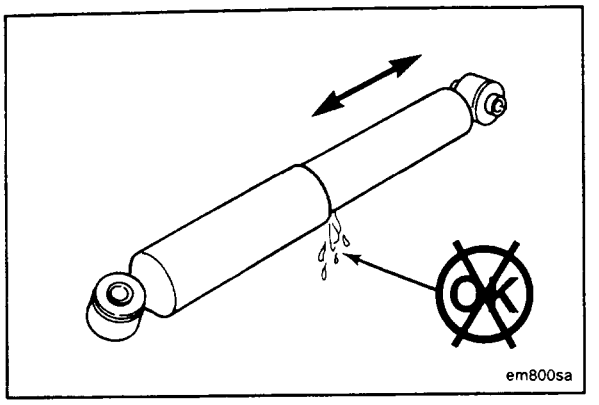


## Check For Reuse

1. Check the shock absorber for fluid leakage and bushing wear. Push the shock absorber up and down. Check the vibration absorption.

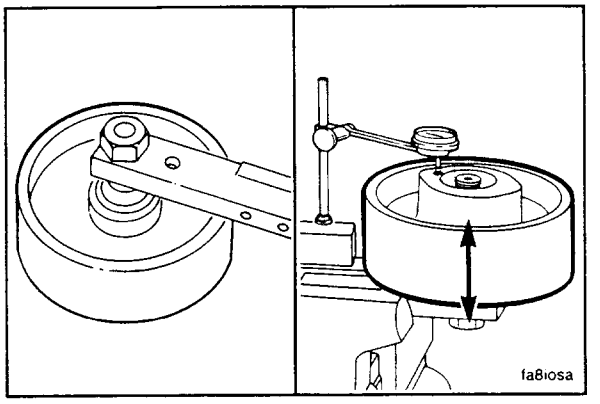


2. Check the idler pulley. Rotate the pulley to check for rough bearings. Check the bearing end clearance.

| Bearing End Clearance | | |
|---|---|---|
| mm | | in |
| 0.08 | MIN | 0.003 |
| 0.25 | MAX | 0.010 |

3. Check the grease seal for damage.

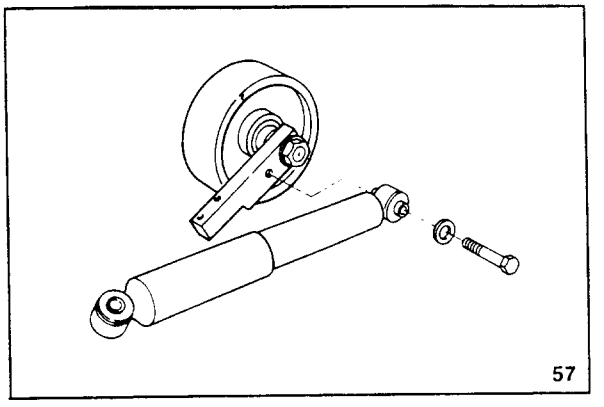


## Install

1. Install the shock absorber on the pulley assembly. Tighten the capscrew to 45 N•m [35 ft-lb].

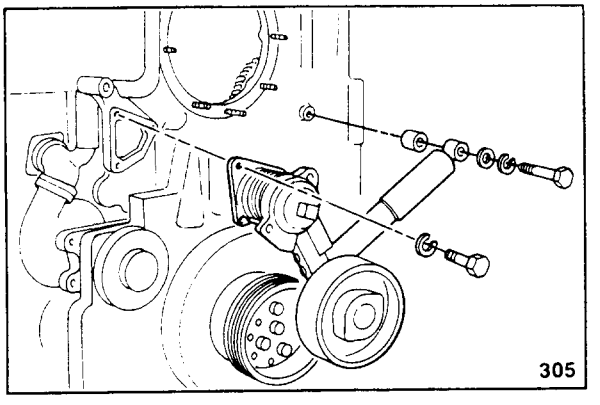


2. Install the idler assembly, spacer and capscrews. Tighten the capscrews to 45 N•m [35 ft-lb].

3. Install the fan belt. Refer to Procedure 01-23.

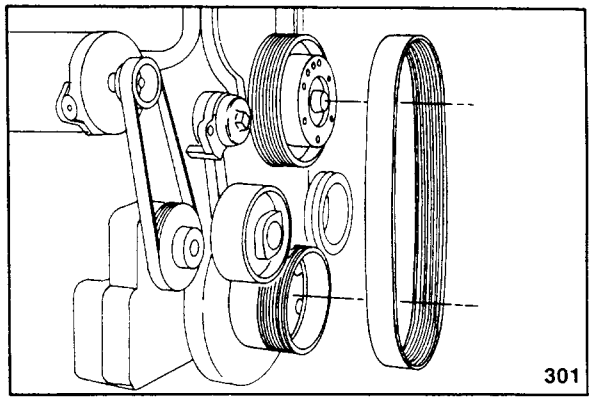


4. Do not attempt to pry the belt on the pulley. Turn the adjusting screw counterclockwise to shorten the link if necessary. Install the alternator belt.
5. Adjust belt tension to 225 N•m [165 ft-lb]. Refer to Procedure 06-07.

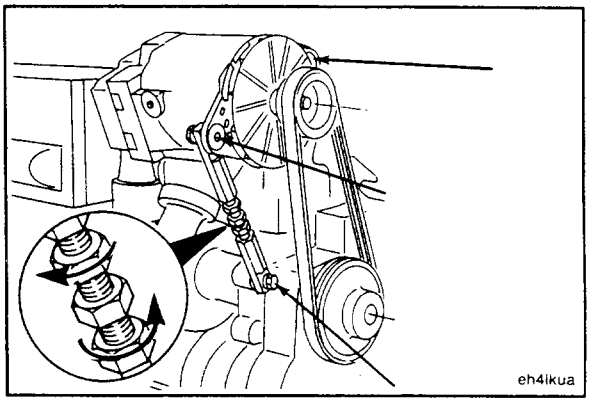


## Water Pump Block Pressure - Check (01-29)

1. Use a pressure gauge with a minimum capacity of 275 kPa [40 psi]. Measure the coolant pressure at the water manifold (1).
2. Operate the engine until the coolant temperature reaches 80°C [180°F].

**Note:** The thermostats must be open.

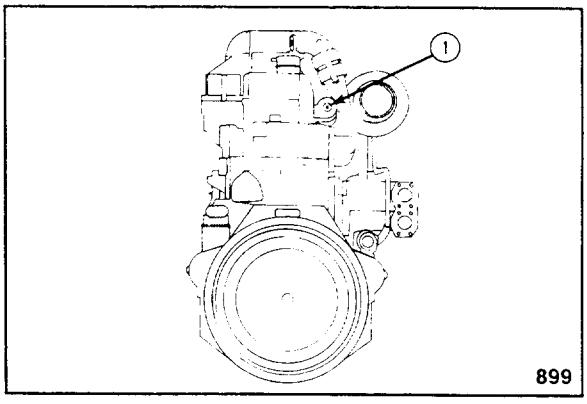


3. Operate the engine at rated RPM. Compare the block pressure readings to the following specifications.

| Engine RPM | Minimum Coolant Pressure kPa | PSI |
|---|---|---|
| 1800 | 75 | 11 |
| 1900 | 82 | 12 |
| 2100 | 89 | 13 |

**Note:** The maximum coolant pressure with the pressure cap removed, is 241 kPa [35 psi].

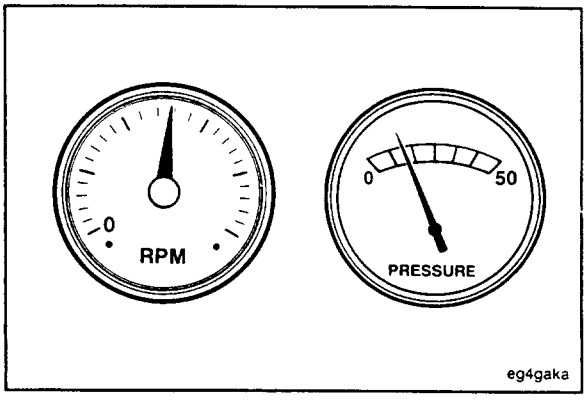

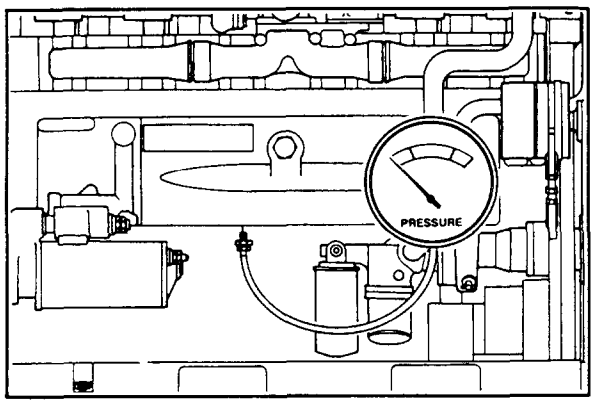


4. If the above measurement location is not accessible, install the gauge in the oil cooler housing.

| Engine RPM | Minimum Coolant Pressure kPa | PSI |
|---|---|---|
| 1800 | 103 | 15 |
| 1900 | 117 | 17 |
| 2100 | 131 | 19 |

**Note:** The maximum coolant pressure with the pressure cap removed, is 241 kPa [35 psi].

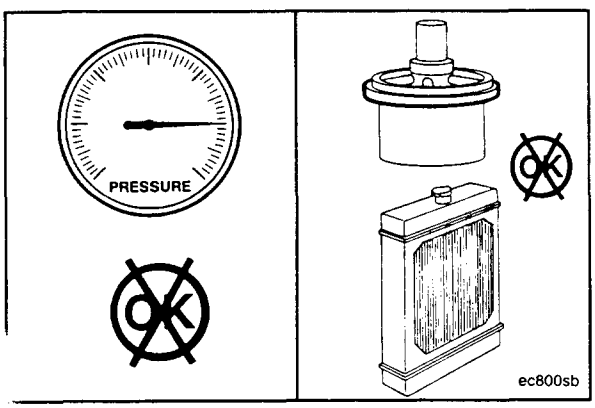


5. If coolant pressure is high, check the thermostat or radiator for a restriction. Refer to Procedure 01-32 or 01-19.

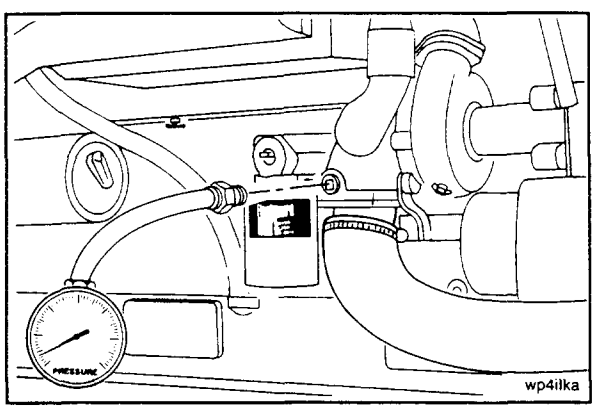


6. If the coolant pressure is low, install a gauge (with a maximum capacity of 69 kPa [10 psi]) at the water pump inlet.

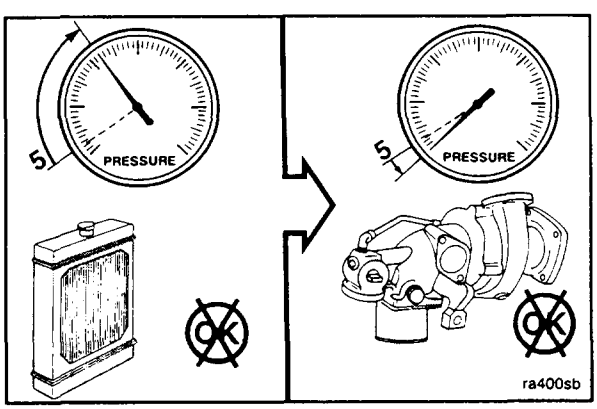


7. Operate the engine at rated RPM. If the gauge reads more than 34 kPa [5 psi], check the radiator. Refer to Procedure 01-19.

   If the gauge reads less than 34 kPa [5 psi], replace the water pump. Refer to Procedure 01-30.

# Water Pump - Replace (01-30)

## Remove

1. Open the draincock on the bottom of the radiator and remove the lower radiator hose to drain the cooling system.

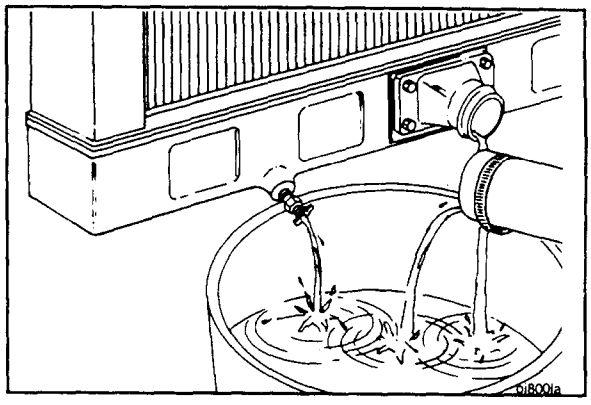


2. Open the draincock on the oil cooler housing and on the water pump.
3. Remove the coolant filter.

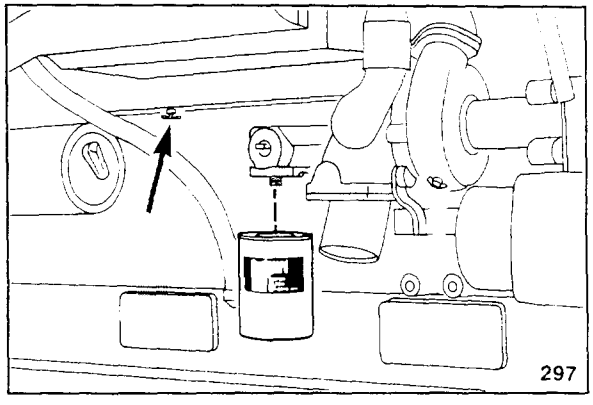


4. Remove by-pass tube clamp (9). Loosen both hose clamps. Remove the by-pass tube, hose, and water connection.

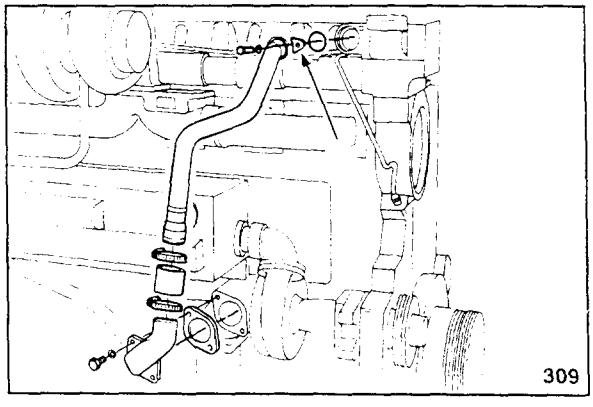


5. Disconnect the aftercooler supply hose from the water pump outlet connection.

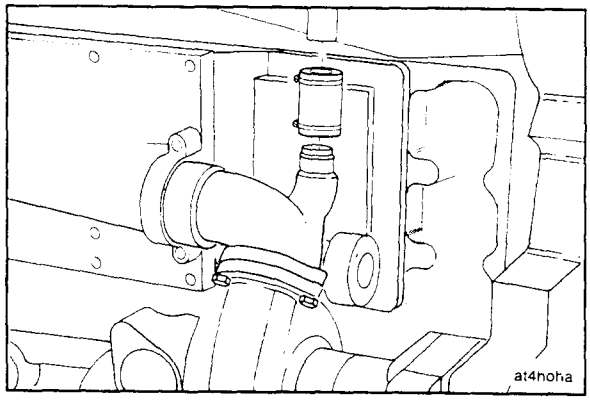

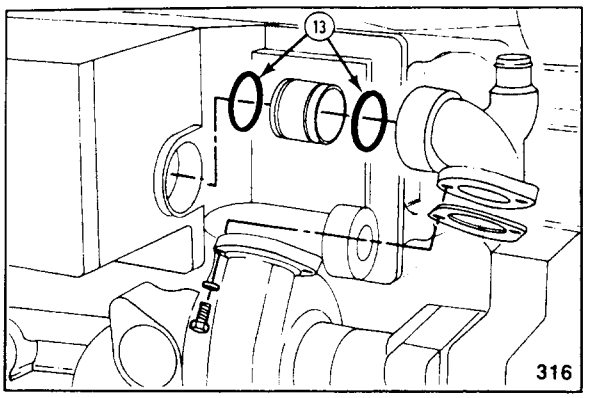


6. Remove the water pump outlet connection assembly.
7. Remove the water transfer tube from the water connection. Remove and discard the two o-rings (13) and the gasket.

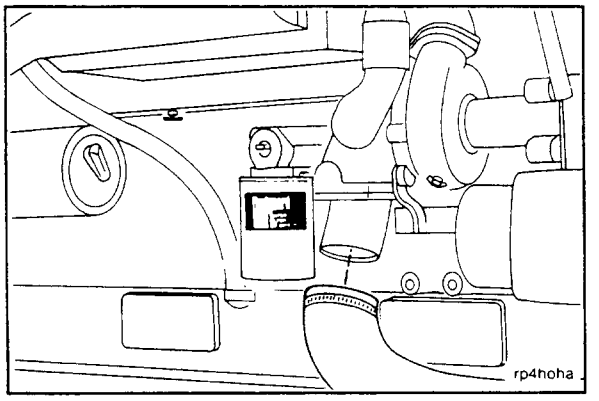


8. Disconnect the lower radiator hose from the water pump inlet.

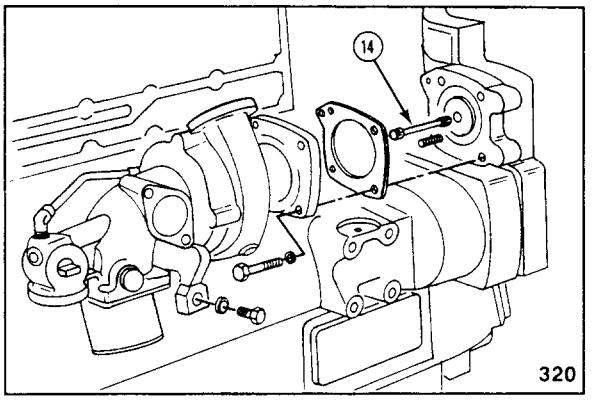


9. Remove the capscrew from the water pump support bracket. Remove the three capscrews and the nut from the water pump mounting flange.
10. Remove the water pump and the gasket. Discard the gasket.
11. Remove the drive shaft (14).

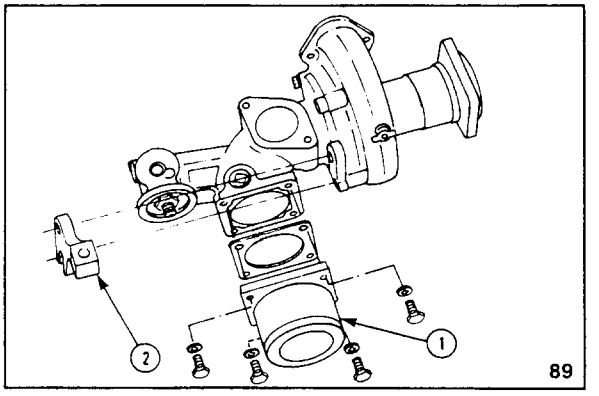


12. Remove the water inlet connection and gasket (1). Remove the support bracket (2).

## Check For Reuse

1. Check the water pump for reuse. Refer to Procedure 01-31.

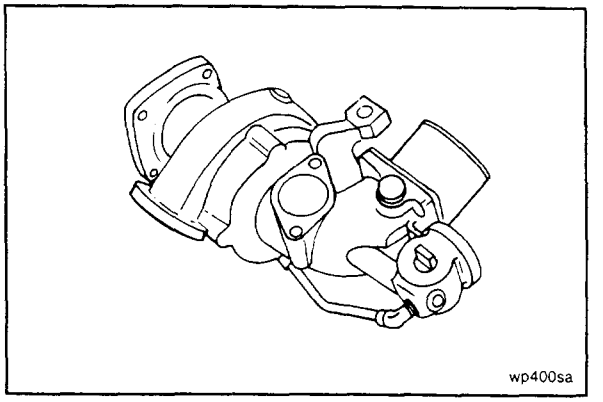


## Install

1. Install the inlet connection (1), gasket and capscrews. Tighten the capscrews to 40 N•m [30 ft-lb].

**Note:** Do not tighten the support bracket until the water pump is assembled to the engine. Use a heavy plain washer on the capscrew that attaches through the slotted hole.

2. Install the support bracket (2).

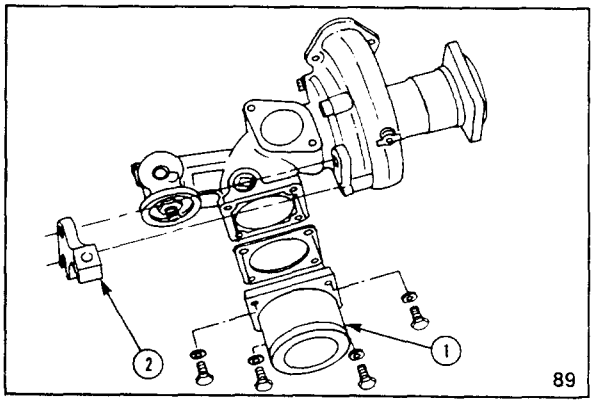


**Note:** Failure of the water pump drive shaft will result when the wrong shaft is used.

3. Use shaft (1) with cast iron impeller pumps. Use shaft (2) with phenolic (plastic) impeller pumps.

**Note:** Install the shaft with the oil hole at the side of the shaft towards the water pump.

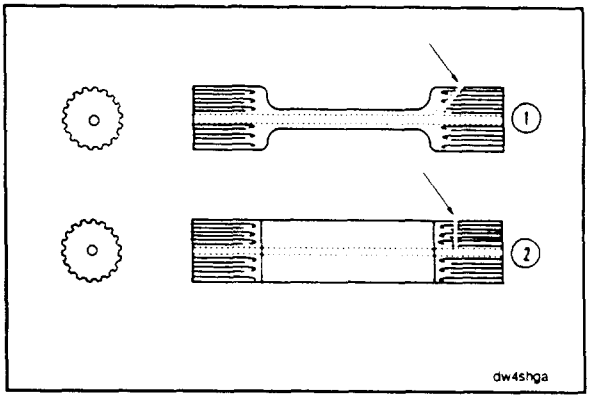


4. Use engine oil and lubricate the drive shaft (14). Install the shaft in the splined hole in the water pump drive.

**Note:** Do not tighten the capscrews and nut until the support bracket is aligned with the cylinder block.

5. Install the gasket and water pump. Install the three capscrews and nut.
6. Tighten the capscrews and nut to 45 N•m [35 ft-lb].

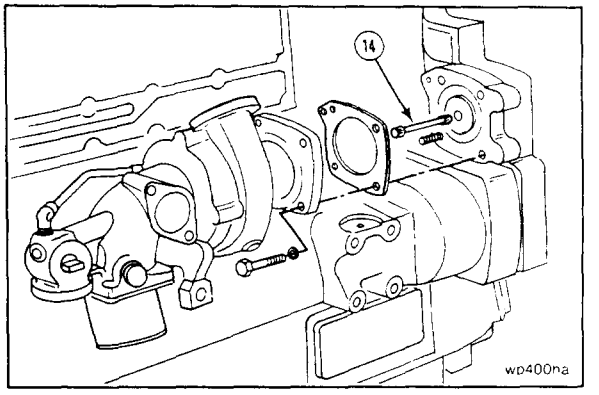

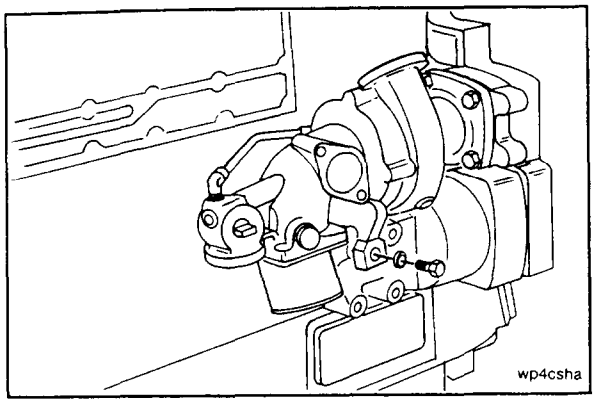


7. The support bracket must be flat against the water pump and the cylinder block. Align the bracket before tightening the capscrews.
8. Install the capscrew through the bracket. Tighten the capscrew to 205 N•m [150 ft-lb].
9. Check the alignment between the support bracket and the water pump. Loosen the capscrew and adjust if necessary.
10. Tighten the capscrews holding the support bracket to the water pump to 45 N•m [35 ft-lb].

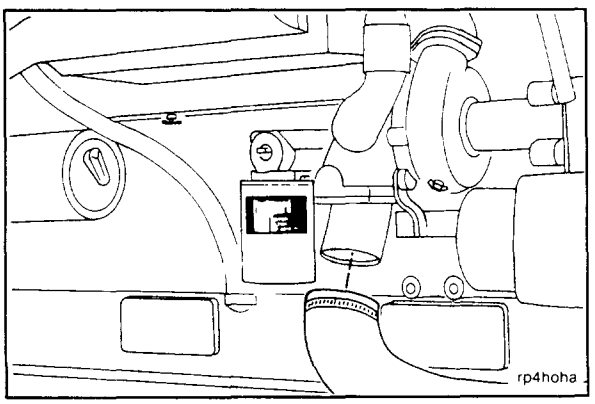


11. Connect the lower radiator hose. Tighten the clamps to 5.6 N•m [50 in-lb].

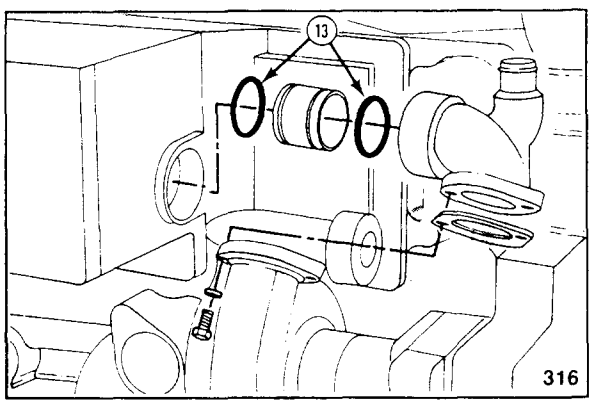


12. Use vegetable oil and lubricate the o-rings (13).
13. Install the transfer tube in the water pump outlet connection.
14. Install the water pump outlet connection, gasket and capscrews. Tighten the capscrews to 45 N•m [35 ft-lb].

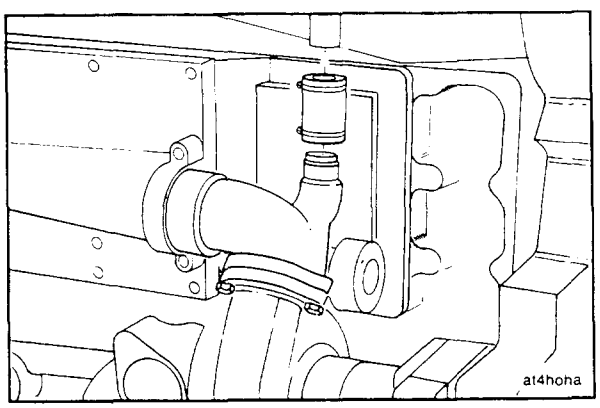


15. Connect the aftercooler supply hose to the water pump outlet connection. Tighten the clamps to 5.6 N•m [50 in-lb].

16. Install the bypass connection gasket. Tighten the capscrews to 40 N•m [30 ft-lb].
17. Use vegetable oil and lubricate the o-ring on the by-pass tube. Install the by-pass tube.

**Note:** The raised lip on the retainer (9) must point away from the thermostat housing.

18. Install the retainer (9) and capscrew.
19. Tighten the capscrew to 45 N•m [35 ft-lb]. Tighten the hose clamps to 5.6 N•m [50 in-lb].

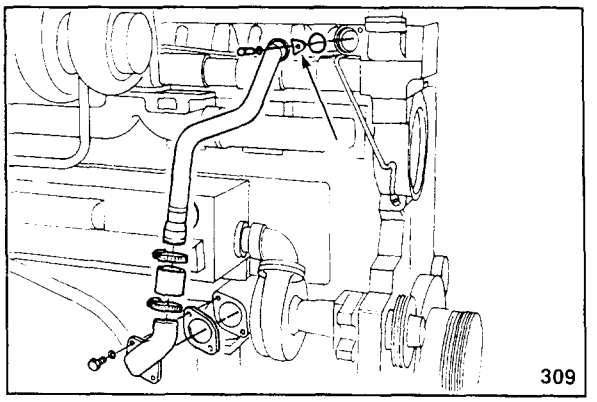


20. Replace the coolant filter. Refer to Procedure 01-08.
21. Close the draincock on the water pump and oil cooler housing.

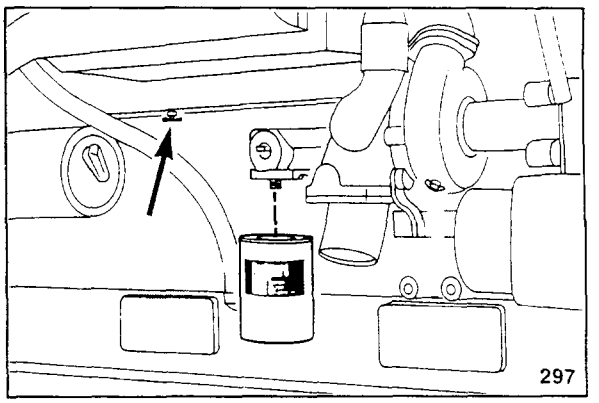


22. Fill the cooling system. Refer to Procedure 01-07.
23. Operate the engine to 70°C [160°F] coolant temperature and check for leaks.

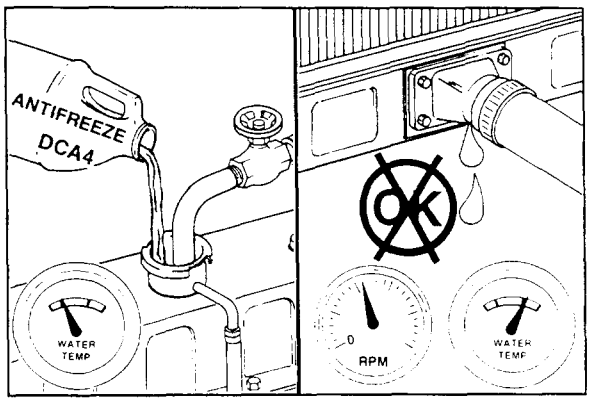


## Water Pump - Check For Reuse (01-31)

1. Rotate the shaft and check for rough or damaged bearings.

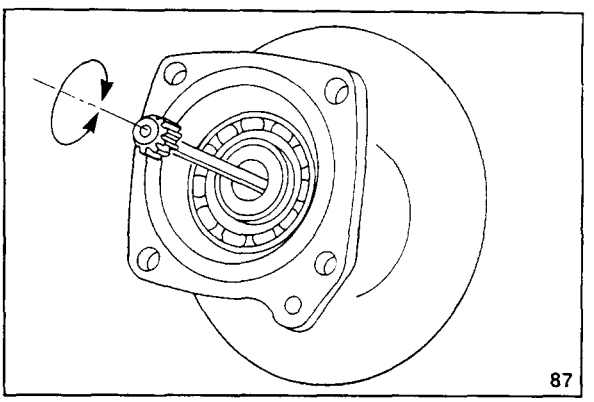

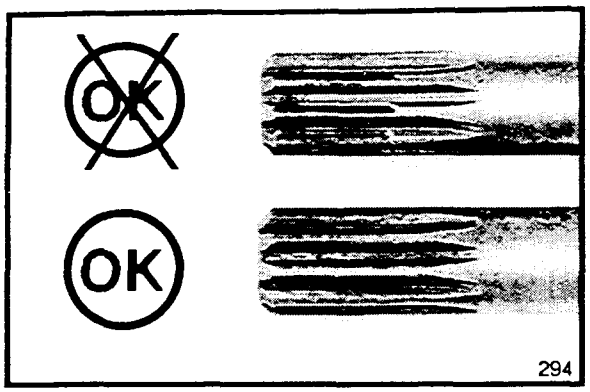


2. Check the drive shaft for wear. If the drive shaft splines are worn, check the female splines in the pump and in the water pump drive.

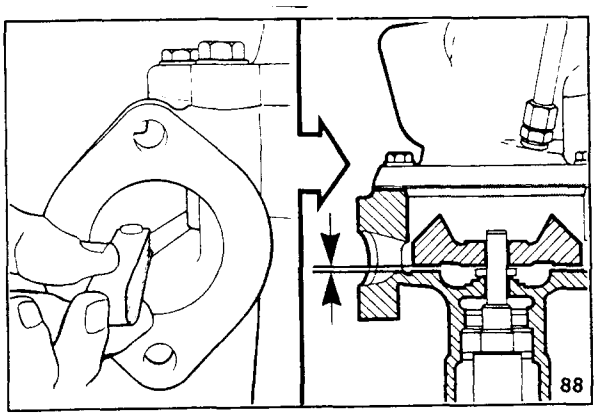


3. Use a feeler gauge and measure the impeller to pump body clearance.

| Impeller Vane to Body Clearance | | |
|---|---|---|
| mm | | in |
| 0.58 | MIN | 0.023 |
| 0.86 | MAX | 0.034 |

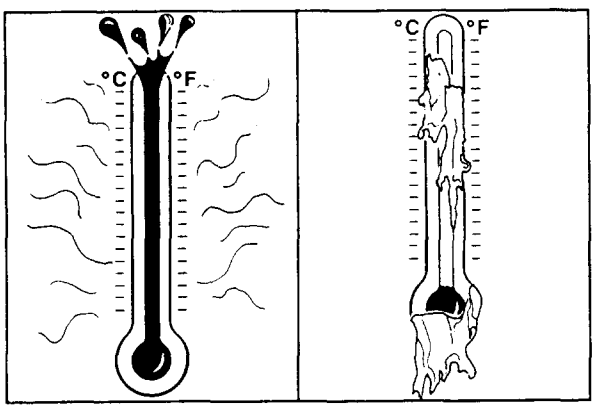


## Thermostat - Test (Thermostat in chassis) (01-32)

If the complaint is engine coolant below normal, perform steps 1,2,3,4,5,6,7,8, and 9.

If the complaint is engine coolant above normal, perform steps 10,11,12, and 13.

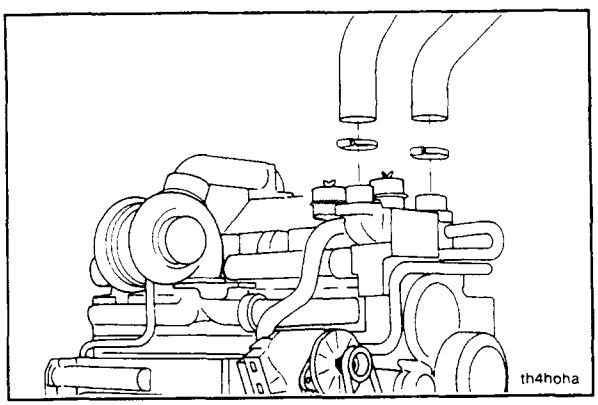


**Warning: Complete this test with the engine coolant temperature below 50°C [120°F]. Hot steam can cause serious personal injury.**

1. Remove the upper radiator hoses from the thermostat housing.

2. Install 2 hoses of the same size on the thermostat housing outlets long enough to reach a remote dry container.
3. Install and tighten hose clamps on the housing outlets.
4. Place the end of the hoses in two dry containers.

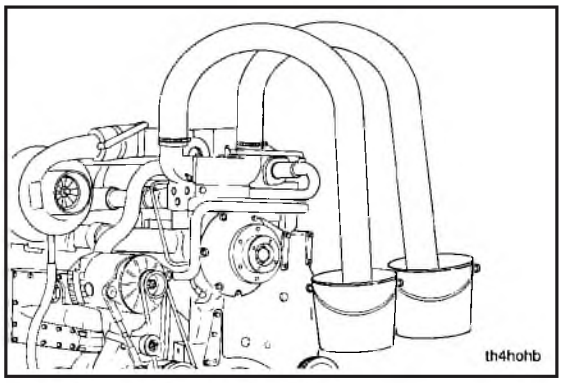


5. Operate the engine at rated RPM for one minute.
6. Shut the engine off, and measure the amount of coolant collected in each container.
7. The amount of coolant collected must not be more than 100 cc [3.3 fluid ounces].

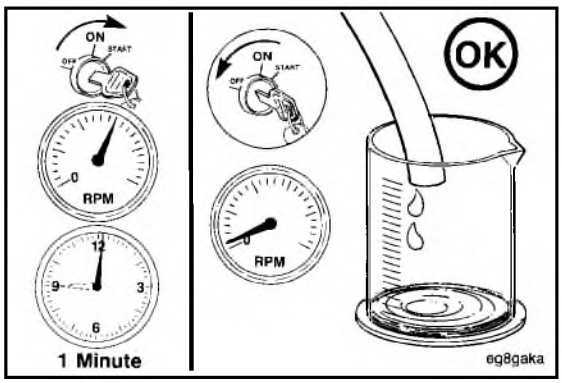


8. If more than 100 cc [3.3 fluid ounces] of coolant is collected, the thermostat or thermostat seal is leaking.
9. Remove the thermostat and test operation as described in Procedure 01-33. Refer to Procedure 01-34 for test instructions.

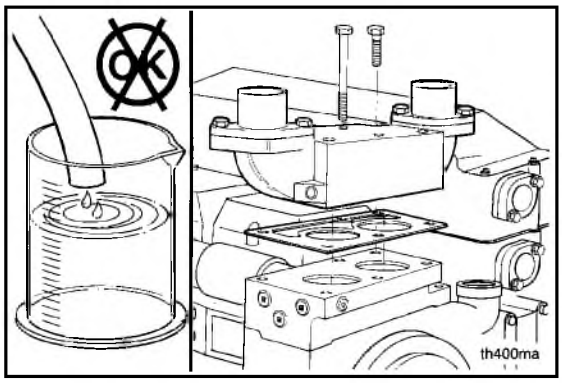


10. Restrict the radiator air flow. Operate the engine until the coolant temperature rises to 90-93°C [195-200°F].

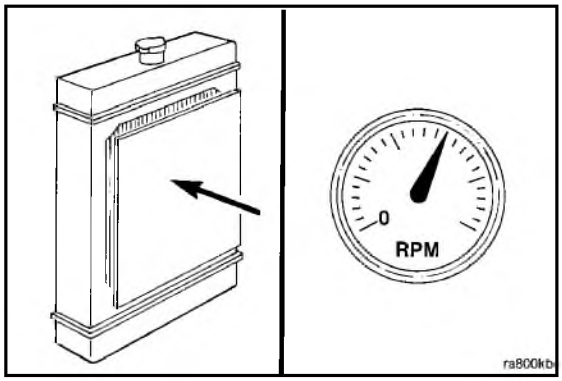

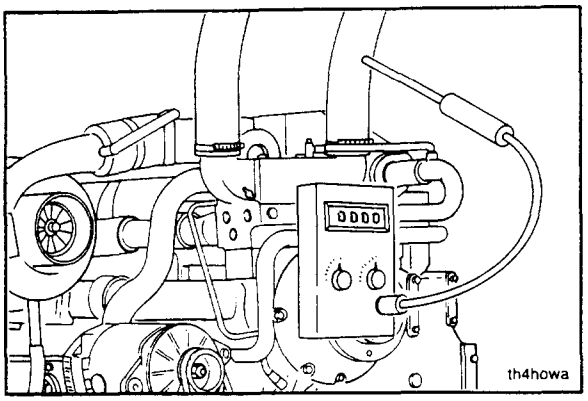


11. Record the temperature of the coolant outlet hoses. Coolant in these hoses indicates the thermostats have started to open.

    Use a contact pyrometer (shown) or install a temperature gauge in the desired locations prior to operating the engine.

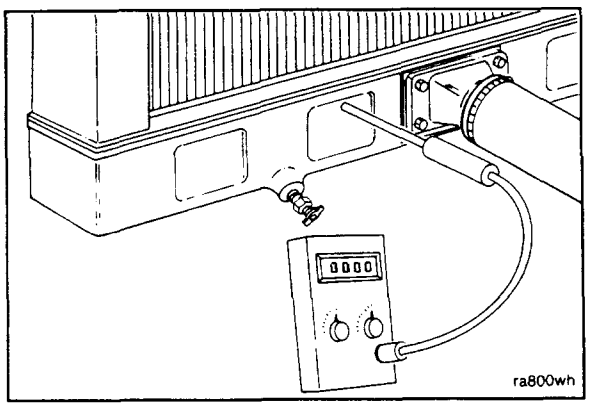


12. Record the temperature of the radiator bottom tank or coolant out tube.

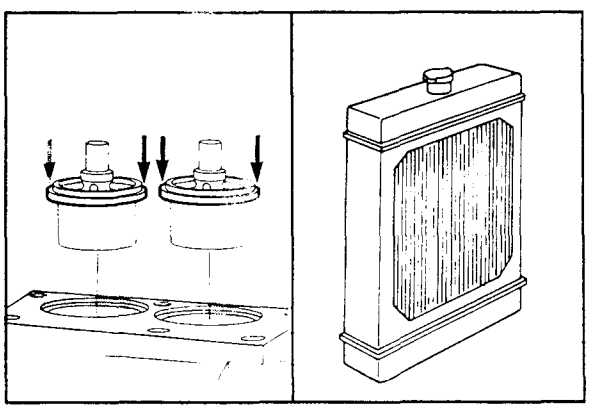

13. If the difference in temperature is more than 8°C [15°F] either the thermostats are not fully open or the radiator core is plugged.

To replace the thermostats refer to Procedure 01-33. To check the radiator refer to Procedure 01-19.

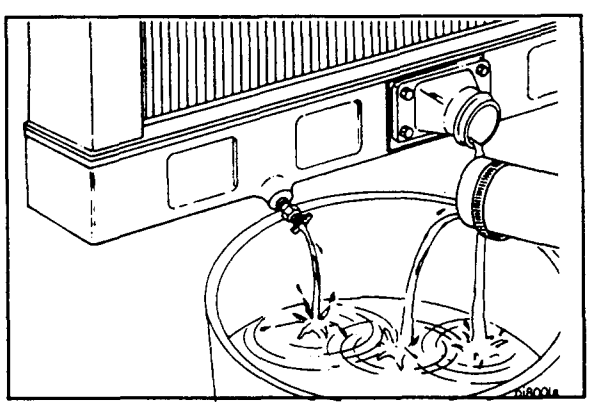

# Thermostat - Replace (01-33)

## Remove

1. Open the draincock on the bottom of the radiator and remove the lower radiator hose to drain the cooling system.

2. Remove both upper radiator hoses from the thermostat housing.
3. Remove the vent line from the top of the thermostat housing.

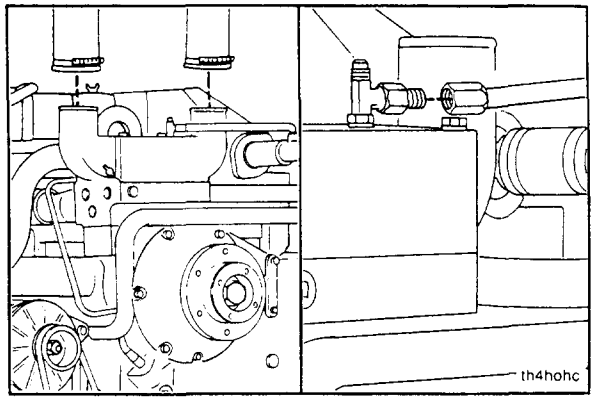


4. Remove by-pass tube clamp (9). Loosen both hose clamps. Remove the by-pass tube.

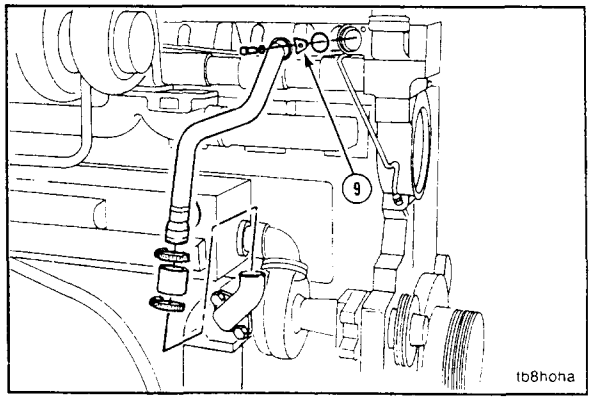


5. Remove the (5) long capscrews and (1) short capscrew.
6. Remove the thermostat housing and gasket.

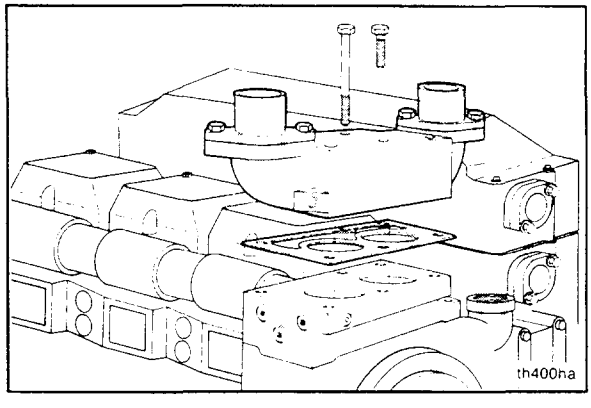


7. Remove the thermostats (9) and seals (10).

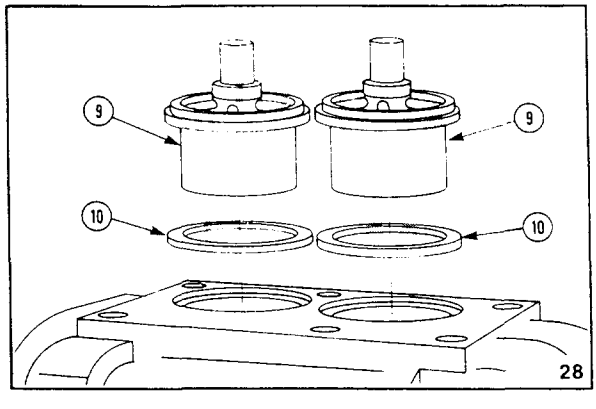

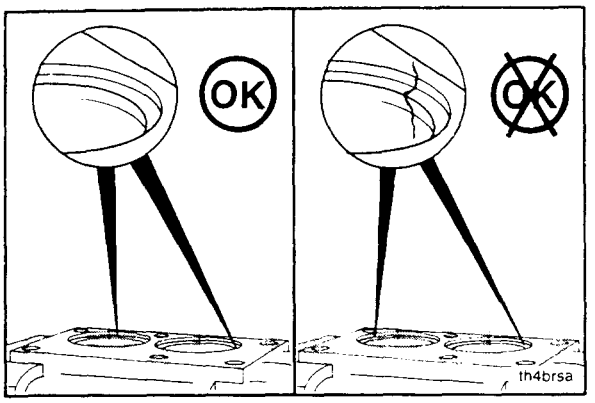


## Check For Reuse

1. Clean and inspect the thermostat housing for cracks, pitting, or other damage.

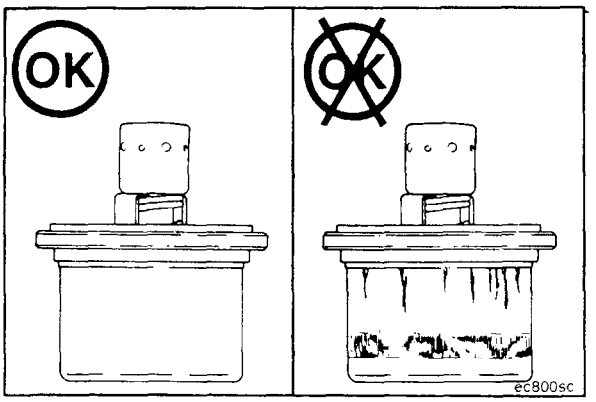


2. Check the thermostat for wear or damage. Check for proper operation, refer to Procedure 01-34.

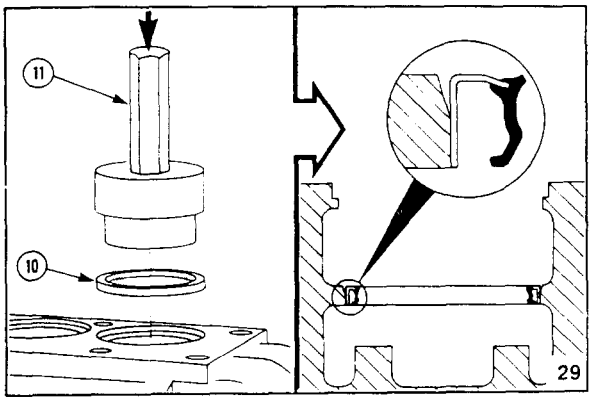


## Install

**Note:** The seal must be installed with the part number up.

1. Use a mallet and seal driver Part No. 3375411. Install the seal.

**Note:** Install the seal no more than 0.51 mm [0.020] below the top of the cast edge.

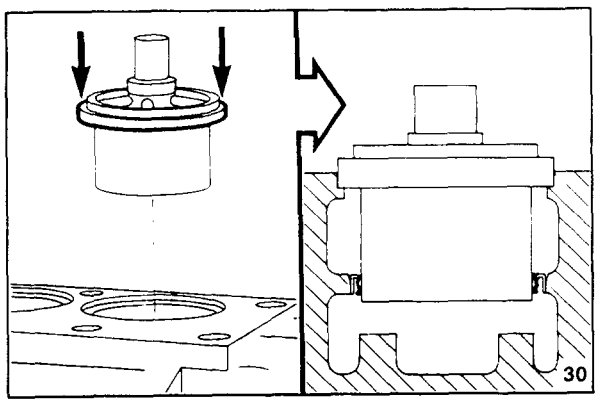


2. Install the thermostat by pushing on the outer rim.

3. Install a new gasket. Install the thermostat housing and capscrews. Tighten the capscrews to 45 N•m [35 ft-lb].

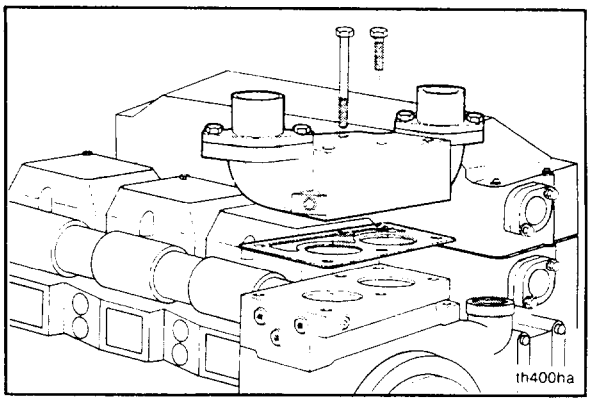


4. Use vegetable oil and lubricate the o-ring on the by-pass tube. Install the by-pass tube.

**Note:** The raised lip on the retainer (9) must point away from the thermostat housing.

5. Install the retainer (9) and capscrew.
6. Tighten the capscrew to 45 N•m [35 ft-lb]. Tighten the hose clamps to 5.6 N•m [50 in-lb].

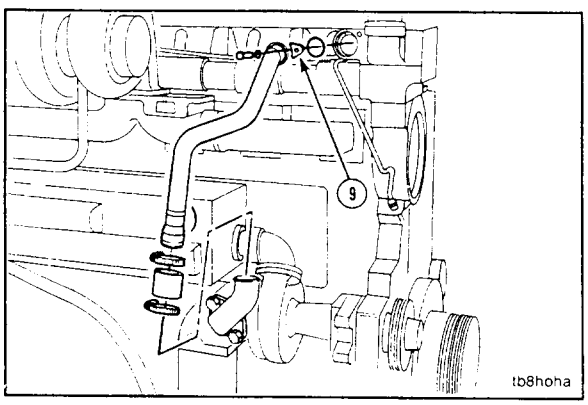


7. Install the two upper radiator hoses.
8. Tighten the hoses clamps to 5.6 N•m [50 in-lb].

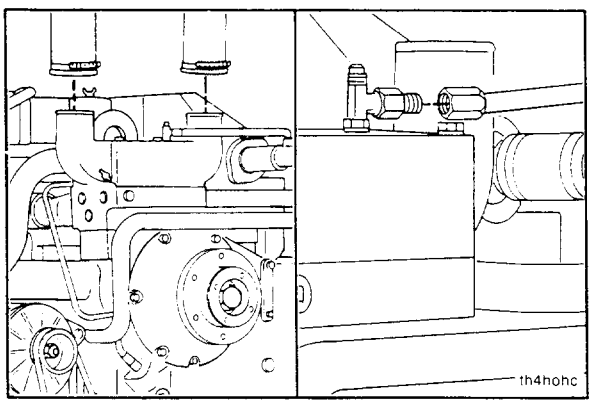


9. Fill the cooling system. Refer to Procedure 01-07.
10. Operate the engine to 70°C [160°F] coolant temperature and check for leaks.

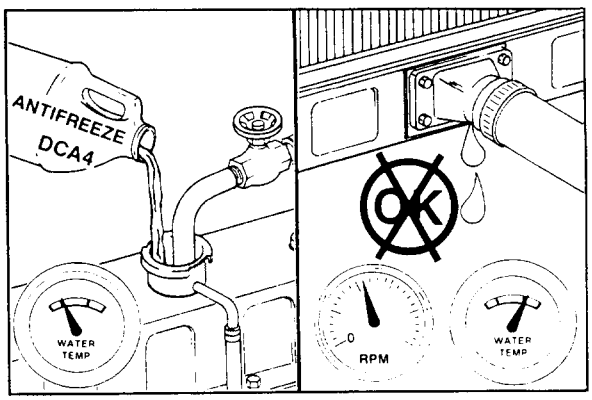

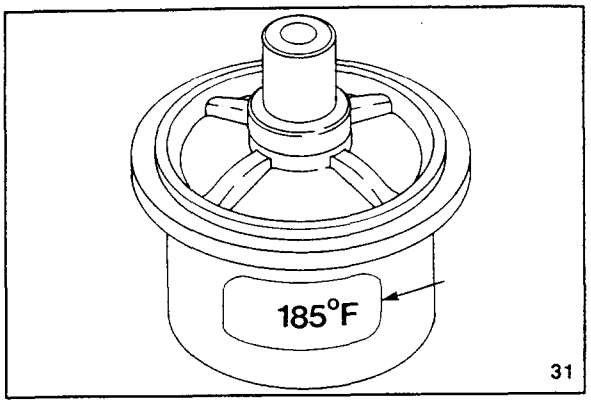


# Thermostat - Check Operating Temperature (01-34)

1. Check the thermostat to see at what temperature it is designed to open.

**Note:** The design temperature of this thermostat is 185°F.

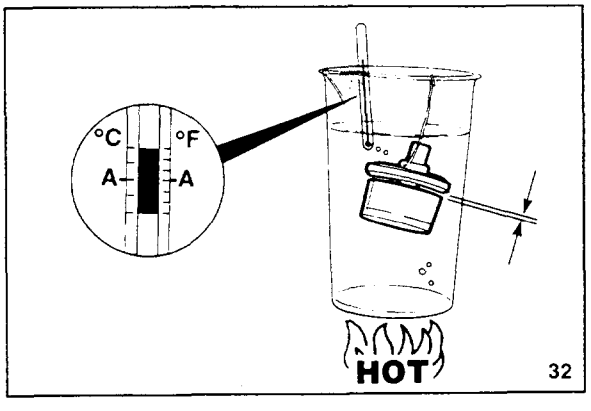


2. Suspend the thermostat and a thermometer in a container of water. Do not allow the thermostat or the thermometer to touch the side of the container. Heat the water, and note the temperature when the thermostat begins to open.

| Initial Opening Temperature | | |
|---|---|---|
| **Degrees °C** | | **Degrees °F** |
| (A) Minus 2°C | MIN | (A) Minus 3°F |
| (A) Plus 2°C | MAX | (A) Plus 3°F |

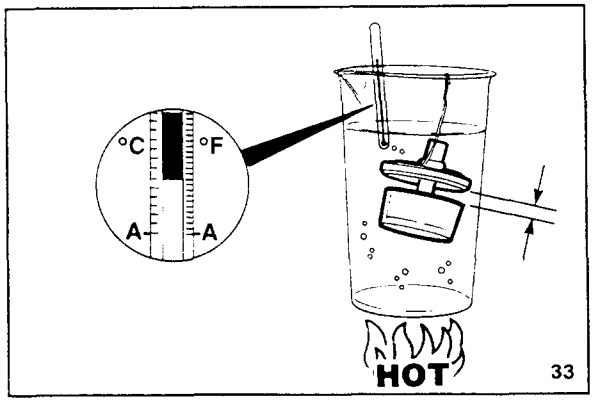


3. Continue to apply heat, and note the temperature when the thermostat is completely open.

| Maximum Open Distance | |
|---|---|
| **mm** | **in** |
| 0.65 | [0.38] |

| Maximum Open Temperature | | |
|---|---|---|
| **Degrees °C** | | **Degrees °F** |
| (A) Plus 6°C | MIN | (A) Plus 10°F |
| (A) Plus 12°C | MAX | (A) Plus 22°F |

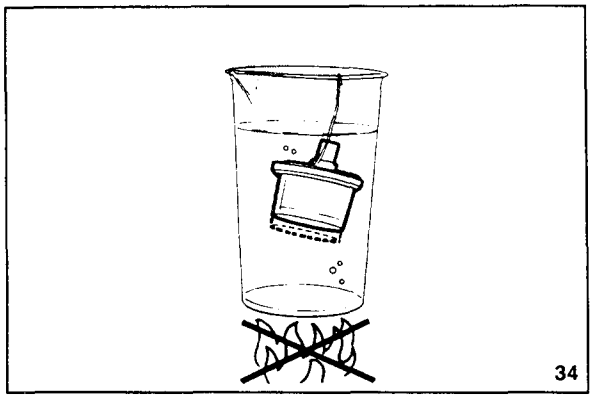


4. Remove the container from the heat. Check to see if the thermostat returns to the CLOSED position.

# Thermostat Housing - Replace (01-35)

## Remove

1. Open the draincock on the bottom of the radiator and remove the lower radiator hose to drain the cooling system.

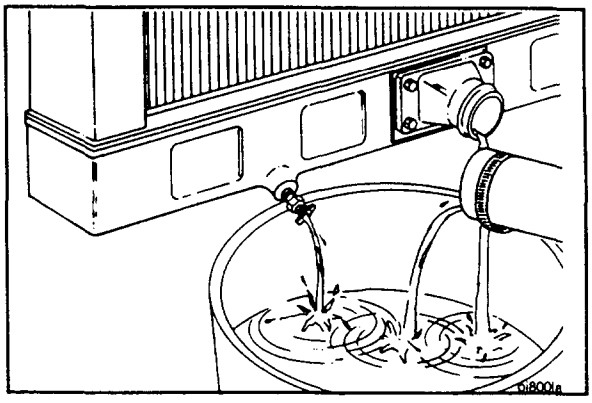

2. Remove both upper radiator hoses from the thermostat housing.
3. Remove by-pass tube clamp (9). Loosen both hose clamps. Remove the by-pass tube.

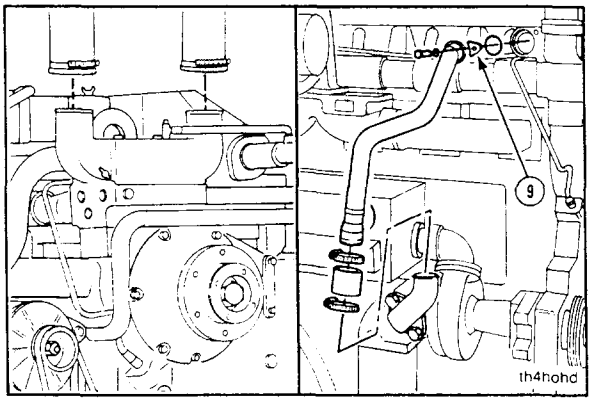


4. Remove the aftercooler return tube and gasket (7), hose (8) and vent hose (6) from the thermostat housing support.

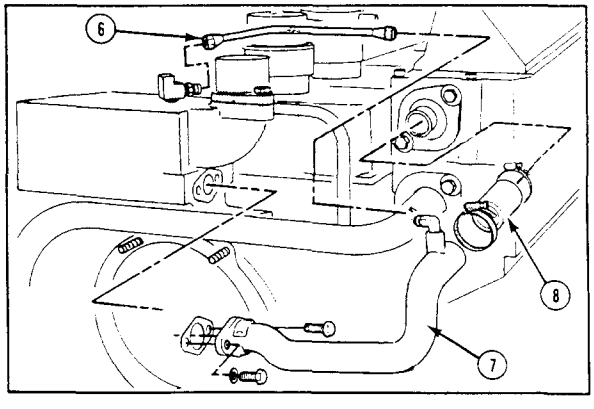


5. Disconnect the air compressor water outlet tube from the thermostat housing.
6. Remove the four mounting capscrews and the thermostat housing assembly.
7. Remove the water transfer tube. Remove and discard the two o-rings (19).

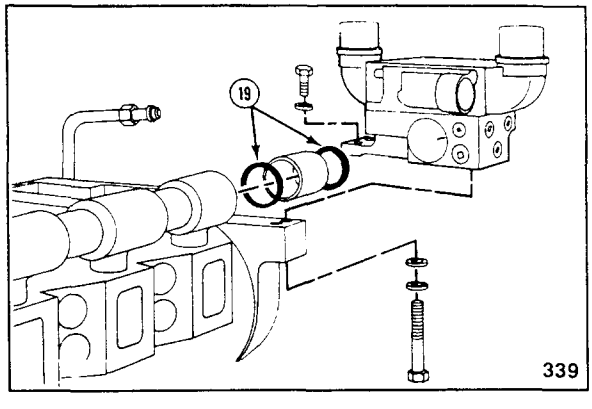

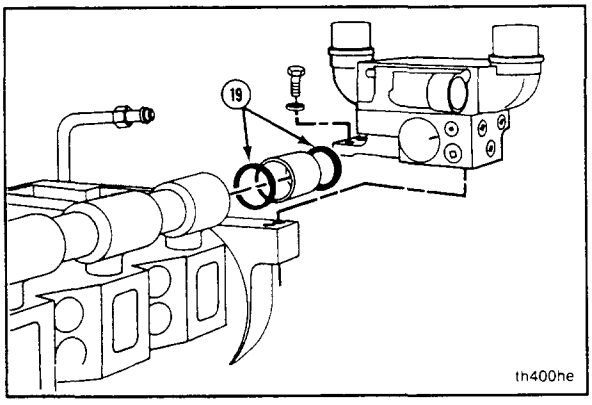


## Install

1. Install the o-rings (19) on the transfer tube.
2. Use vegetable oil and lubricate the o-rings. Install the tube in the bore of the rocker lever housing.
3. Align the bore in the thermostat housing support with the transfer tube. Push the support into position.

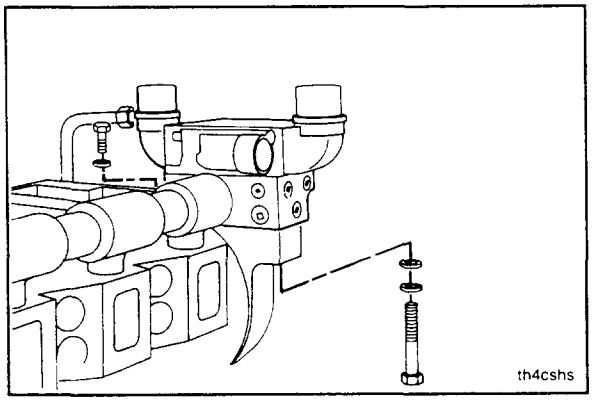


**Note:** The upper outside capscrew holds a clip for the aftercooler water inlet tube.

4. Install the four lockwashers and capscrews. Tighten the capscrews to 45 N•m [35 ft-lb].
5. Connect the air compressor water outlet tube and grommet to the fitting on the thermostat housing.

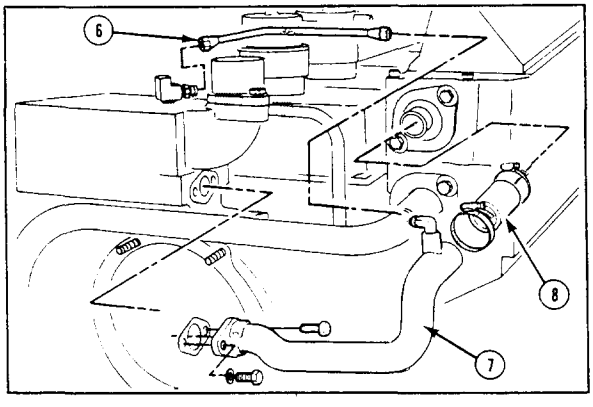


6. Connect the aftercooler return tube (7) and hose(s) to the aftercooler. Install the gasket and the return tube capscrews.
7. Tighten the capscrews to 45 N•m [35 ft-lb]. Tighten the clamps to 5.6 N•m [50 in-lb].
8. Install the vent hose (6).

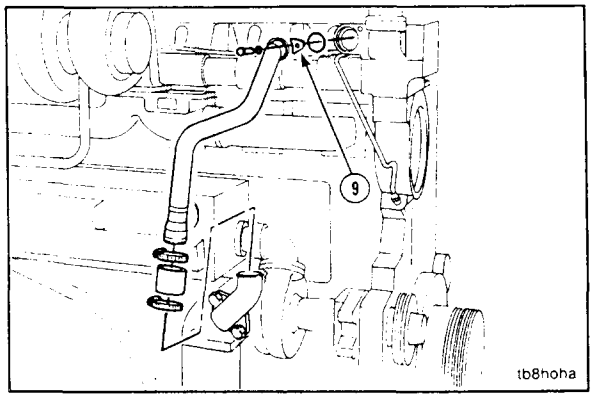


9. Use vegetable oil and lubricate the o-ring on the by-pass tube. Install the by-pass tube.

**Note:** The raised lip on the retainer (9) must point away from the thermostat housing.

10. Install the retainer (9) and capscrew.
11. Tighten the capscrew to 45 N•m [35 ft-lb]. Tighten the hose clamps to 5.6 N•m [50 in-lb].

3. Install a new gasket. Install the thermostat housing and capscrews. Tighten the capscrews to 45 N•m [35 ft-lb].

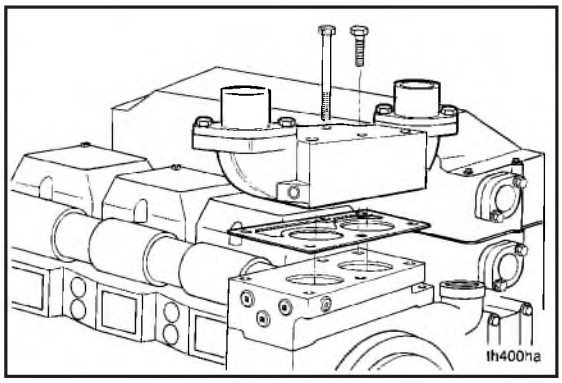


4. Use vegetable oil and lubricate the o-ring on the by-pass tube. Install the by-pass tube.

**NOTE:** The raised lip on the retainer (9) must point away from the thermostat housing.

5. Install the retainer (9) and capscrew.
6. Tighten the capscrew to 45 N•m [35 ft-lb]. Tighten the hose clamps to 5.6 N•m [50 in-lb].

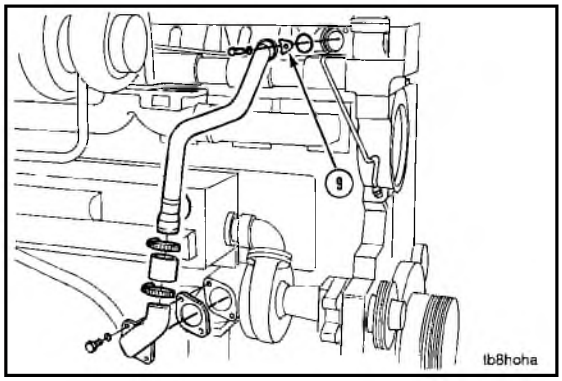


7. Install the two upper radiator hoses.
8. Tighten the hoses clamps to 5.6 N•m [50 in-lb].

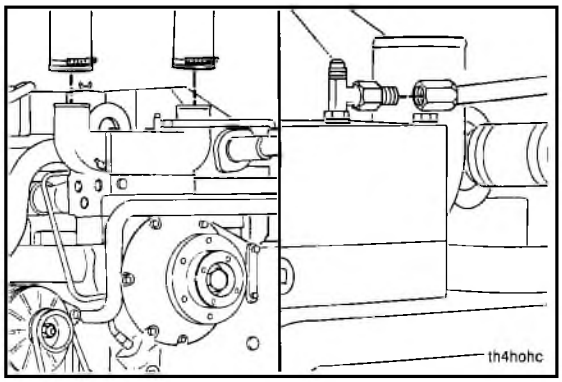


9. Fill the cooling system. Refer to Procedure 01-07.
10. Operate the engine to 70°C [160°F] coolant temperature and check for leaks.

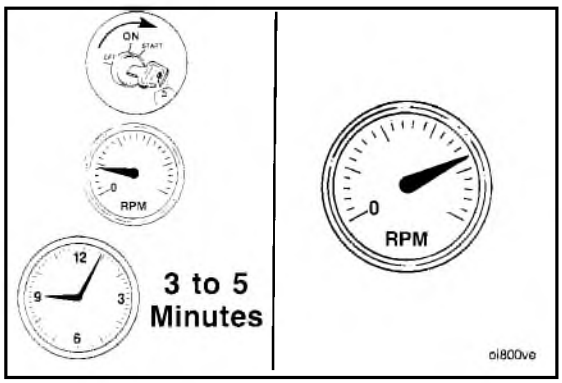

12. Install the two upper radiator hoses.
13. Tighten the hoses clamps to 5.6 N•m [50 in-lb].

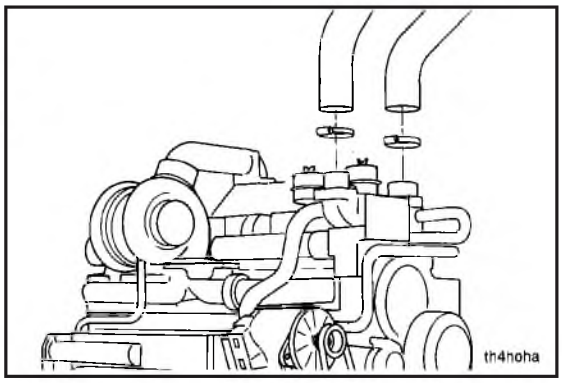


14. Fill the cooling system. Refer to Procedure 01-07.
15. Operate the engine to 70°C [160°F] coolant temperature and check for leaks.

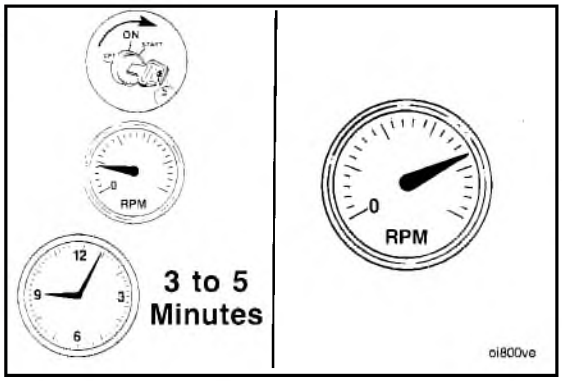


## Check For Coolant Leaks At Counterbore (01-36)

**NOTE:** This check is made with the cylinder heads removed. If the heads have not been removed, refer to Procedure 07-14.

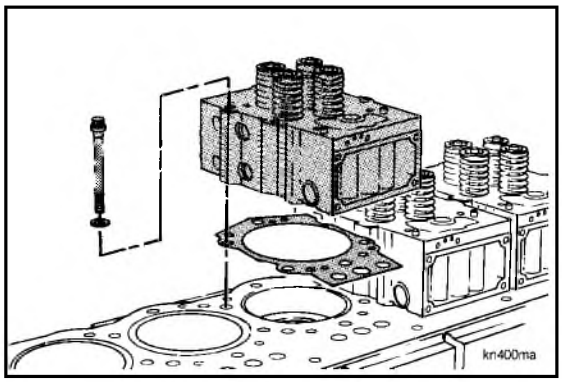


1. Seal the water holes (15) in the top deck of the block with tape.

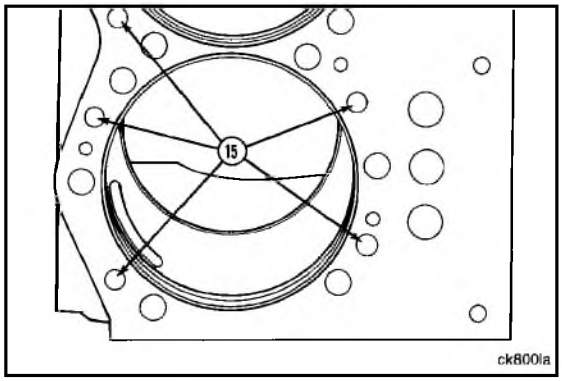

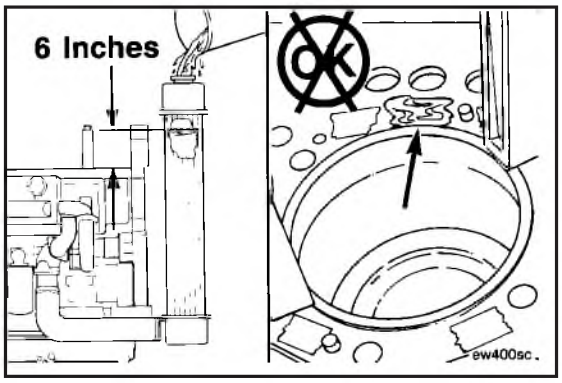


2. Fill the radiator with water until there is at least a 152 mm [6 inch ] static head of water above the cylinder block deck.

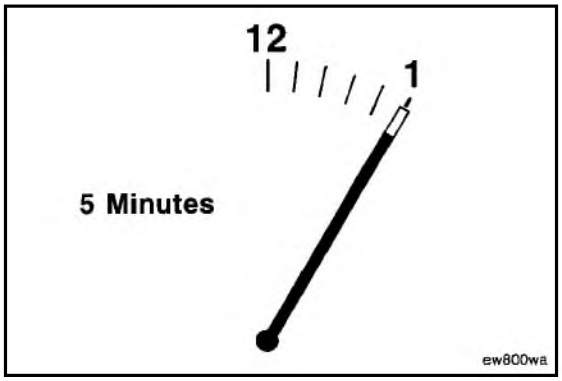


3. Allow at least 5 minutes for signs of leakage to appear.

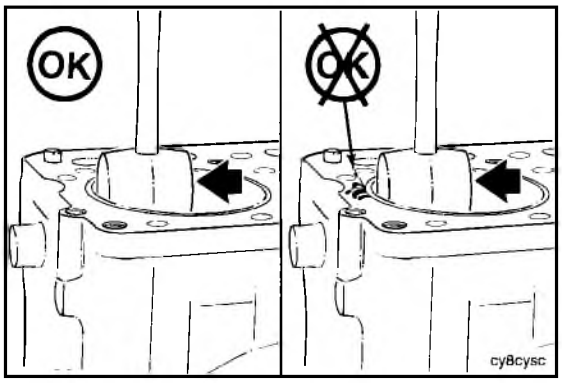


4. After signs of leakage appear, it may be difficult to determine which liner is leaking.
5. Check the liner that has an indication of a leak for looseness by tapping it with a plastic hammer.

   If drops of coolant are expelled from the counterbore, the liner is leaking and must be removed. Refer to Procedure 07-26.

# Section 02 - Lubrication Oil System

## Table Of Contents


| | Reference No. | Page No. |
|---|---|---|
| Service Tools | 02-00 | 2-2 |
| General Information | 02-01 | 2-3 |
| Specifications | 02-02 | 2-4 |
| Flow Diagrams | 02-03 | 2-5 |


## System Troubleshooting and Repair List


| | Procedure No. | Page No. |
|---|---|---|
| Internal Engine Damage - Check | 02-04 | 2-8 |
| Oil Leaks (External) - Check | 02-05 | 2-9 |
| Oil System - Leak Check Using Dye | 02-06 | 2-10 |
| Oil Pressure Gauge - Check | 02-07 | 2-11 |
| Oil Temperature Gauge - Check | 02-08 | 2-11 |
| Oil Pan - Drain | 02-09 | 2-12 |
| Oil Pan - Fill | 02-10 | 2-13 |
| Oil Filter (Full Flow And Bypass) - Replace | 02-11 | 2-14 |
| Oil Filter (Full Flow) - Measure Pressure Drop | 02-12 | 2-15 |
| Crankcase Breather And Tube - Replace | 02-13 | 2-16 |
| Dipstick Tube - Replace | 02-14 | 2-18 |
| Dipstick - Calibrate | 02-15 | 2-18 |
| Oil Pan - Replace | 02-16 | 2-20 |
| Oil Pan Adapter - Replace | 02-17 | 2-22 |
| Oil Filter Head - Replace | 02-18 | 2-29 |
| Oil Cooler - Measure Pressure Drop | 02-19 | 2-31 |
| Oil Cooler Cover - Replace | 02-20 | 2-32 |
| Torque Converter Cooler - Replace | 02-21 | 2-36 |
| Oil Cooler Core- Replace | 02-22 | 2-41 |
| Oil Cooler Core - Pressure Test | 02-23 | 2-42 |
| Torque Converter Cooler - Pressure Test | 02-24 | 2-42 |
| Oil Cooler Housing - Replace | 02-25 | 2-43 |
| Main Oil Pressure Regulator - Replace | 02-26 | 2-46 |
| Oil Pump - Replace | 02-27 | 2-48 |
| Oil Pump - Check | 02-28 | 2-50 |

# Required Service Tools - (02-00)

## Lubricating Oil System

The following special tools are recommended to perform the procedures in Section 02. The use of these tools is shown in the appropriate procedure. These tools can be purchased from your local Cummins Authorized Repair Location.

| Tool No. | Tool Description | Tool Illustration |
|---|---|---|
| 3375301<br>3376579 | **Tube Cutter**<br>Open spin-on full flow oil filter for inspection. | 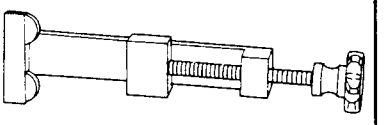 |
| 3375049 | **Oil Filter Wrench**<br>Remove spin-on oil filter. | 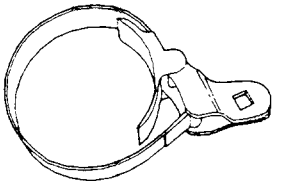 |
| 3376891 | **Flourescent Tracer**<br>Add to oil. Use with black light to find oil leaks. | 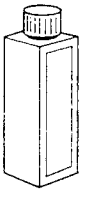 |
| 3377253 | **Blacklight (AC)**<br>Inspect for oil leak or fuel leak. | 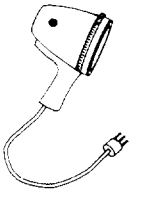 |
| 3377394 | **Blacklight (DC)**<br>Inspect for oil leak or fuel leak. | 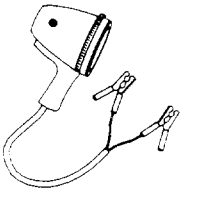 |
| 3375182 | **Valve Spring Tester**<br>Measure spring force at a given spring height. | 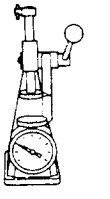 |

| Tool No. | Tool Description | Tool Illustration |
|---|---|---|
| 3375055 | **Pressure Regulator Removal Tool**<br>Remove retaining ring from lube pump regulator (on engine). | 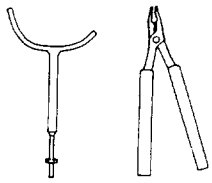 |
| | | |
| | | |
| | | |
| | | |
| | | |
| | | |
| | | |

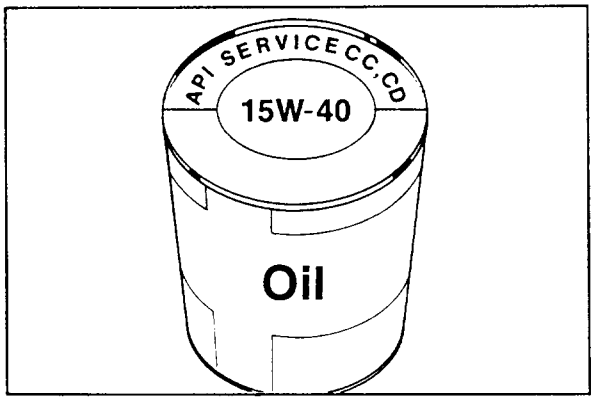


# General Information (02-01)

Cummins Engine Company, Inc. recommends the use of multi-viscosity lubricating oil, preferable 15W-40, if ambient conditions permit. The oil **must** meet API Classification CC/CD for turbocharged engines.

**Caution: Limited use of oils, such as 10W or 10W-30, may aid in starting the engine and provide sufficient oil flow at ambient temperatures below -5°C [23°F]. However, the continuous use of low viscosity oils may decrease engine life. Refer to the accompanying chart.**

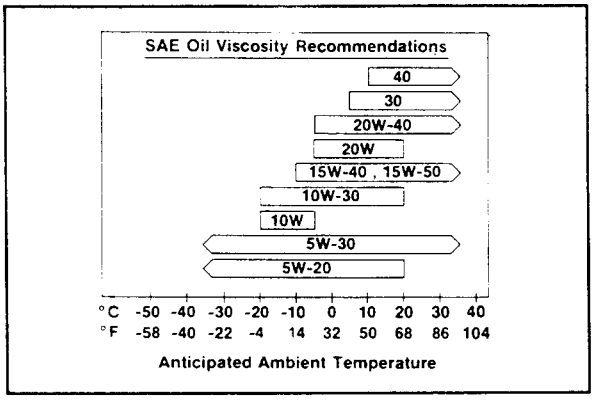

# Lubricating Oil System Specifications (02-02)

## Oil Pressure

At idle (minimum allowable).....138 kPa [20 psi]

At no load governed speed .....345-483 kPa [50-70 psi]

## Oil Filter Capacity

Bypass filter (spin-on).....2.8 liter [0.75 U.S. Gal]

Full flow filter (spin-on) .....3.5 liter [0.93 U.S. Gal]

## Oil Pan Capacity

Part No.3008538 .....32 to 38 liters [8.5 to 10 U.S. Gal]

Part No.207304, 3006484, 3009643, 3200709 .....40 to 47 liters [10.5 to 12.5 U.S. Gal]

Part No.205881 .....57 to 64 liters [15 to 17 U.S. Gal]

Part No.3032521 .....60 TO 68 liters [16 TO 18 U.S. Gal]

Part No.3024391 .....66 to 72 liters [17.5 to 19 U.S. Gal]

## Total System Capacity

Total system capacity including filters (with Part No. 3200709 Oil Pan) is 59.1 liters [15.7 U.S. Gal].

When the rear gear train option is specified, add 7.6 liters [2 U.S. gal] to the oil pan capacity listed in the table.

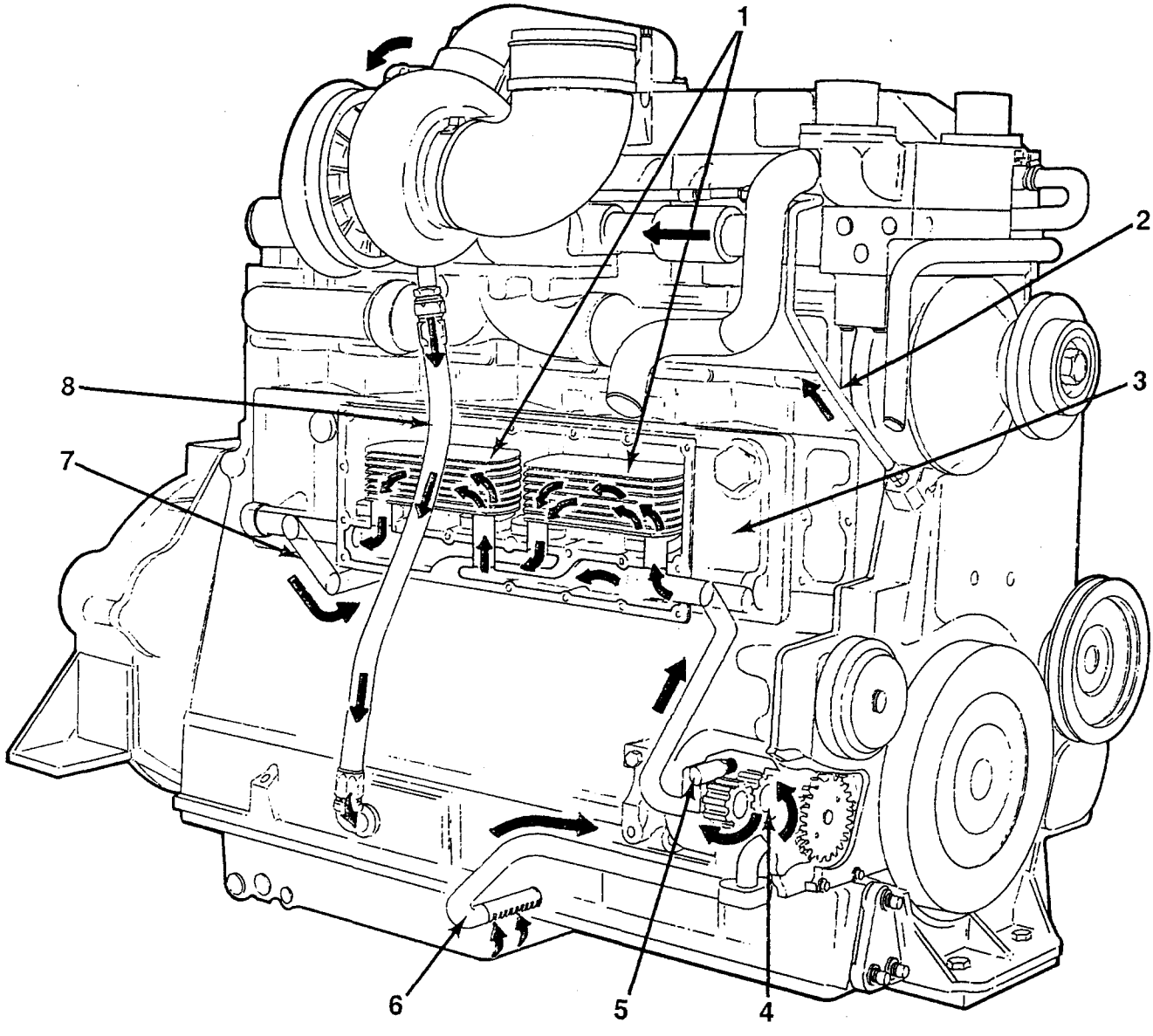


## Flow Diagrams (02-03)

1. Oil cooler elements
2. Turbocharger oil supply
3. Oil cooler housing
4. Lubricating pump
5. Lubricating pump regulator
6. Oil inlet tube
7. Oil to filter head
8. Turbocharger oil drain

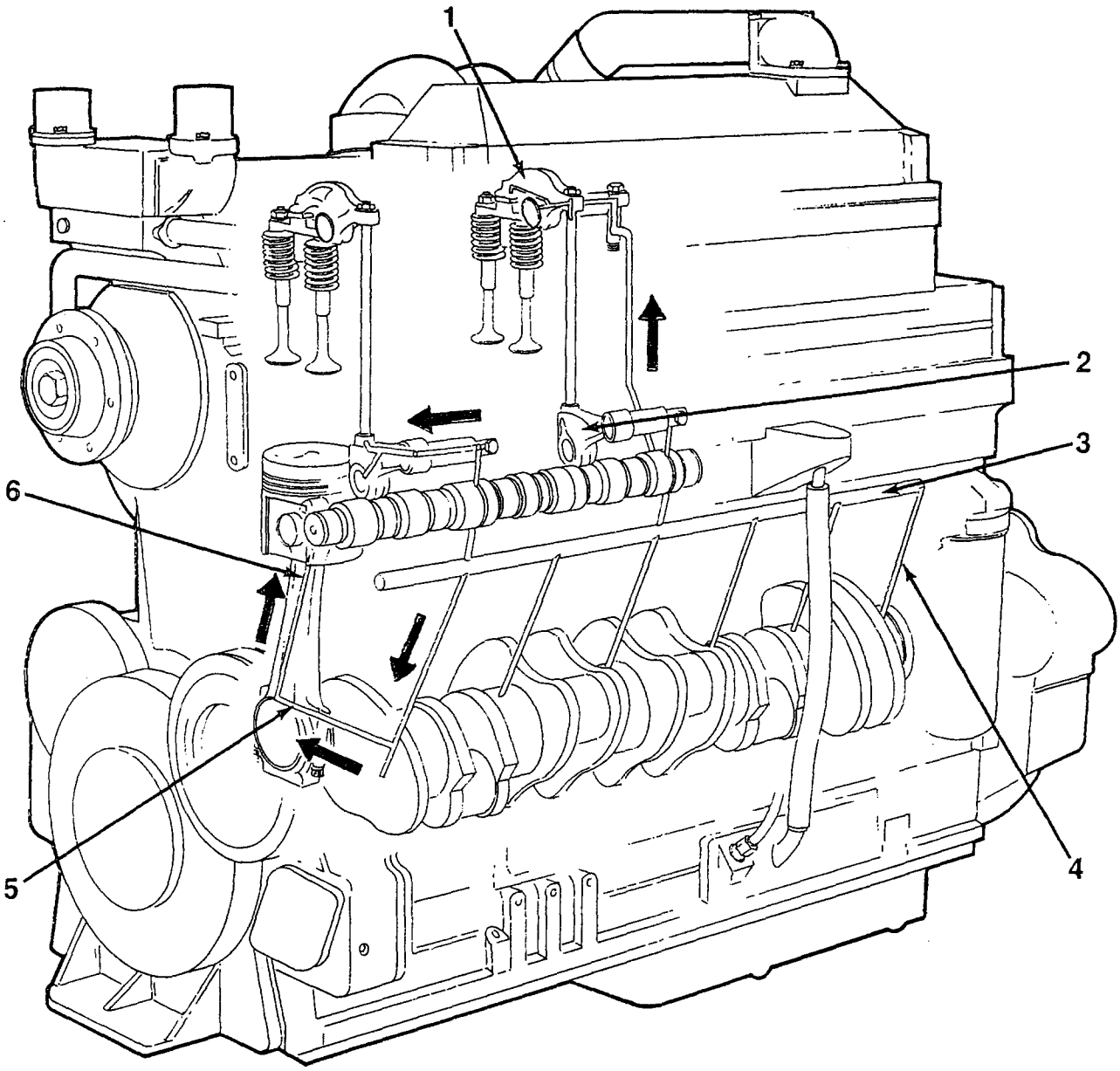


1. Rocker lever
2. Cam follower
3. Main oil rifle
4. Oil supply to main bearings
5. Oil supply to connecting rod
6. Oil supply to piston pin bushing

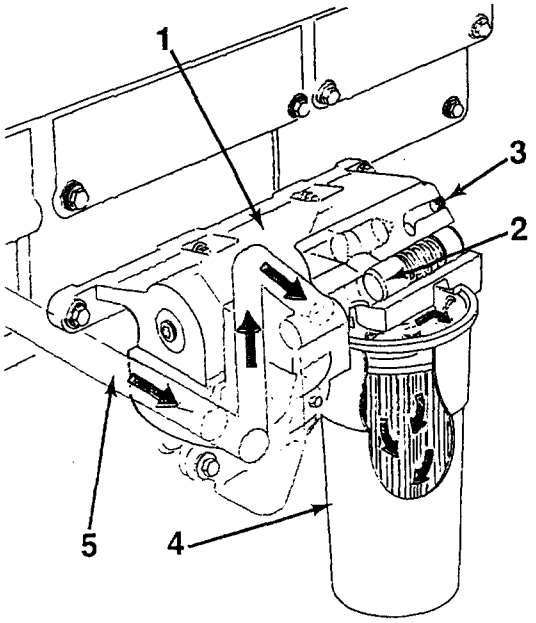


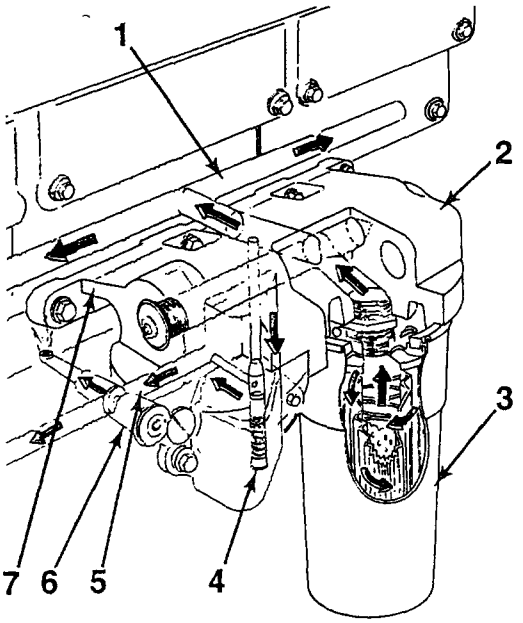


## Filterhead

1. Filterhead
2. Filter bypass valve
3. Oil before filter
4. Full flow filter
5. Oil to filter head

## Filterhead

1. Main oil rifle
2. Oil filter head
3. Full flow filter
4. Piston cooling control valve
5. Piston cooling oil rifle
6. Piston cooling nozzle
7. Oil after filter

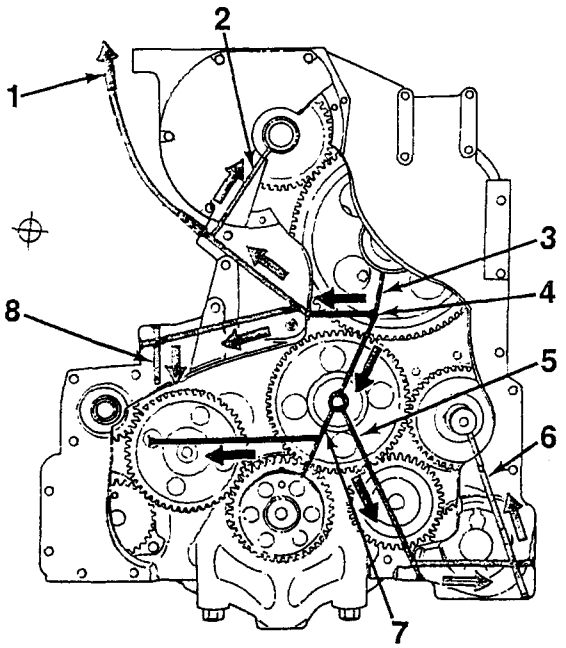


Lines in Block
Lines in Cover

## Front End

1. Oil supply to turbocharger
2. Oil supply to fan hub
3. Oil supply to cam bushing
4. Main oil rifle
5. Oil supply to idler gear and hydraulic pump drive
6. Oil supply to air compressor and fuel pump drive
7. Oil supply to main bearing and idler
8. Oil supply to water pump and housing

# Internal Engine Damage - Check (02-04)

## Lubricating Oil Analysis

A used oil analysis can help diagnose internal damage and determine if it was caused by one of the following:

- Intake air filter malfunction
- Coolant leaks
- Oil diluted with fuel
- Metal particles causing wear

For additional oil analysis information, refer to "Diesel Engine Oil Quality and Engine Oil Analysis", Bulletin No. 3810232.

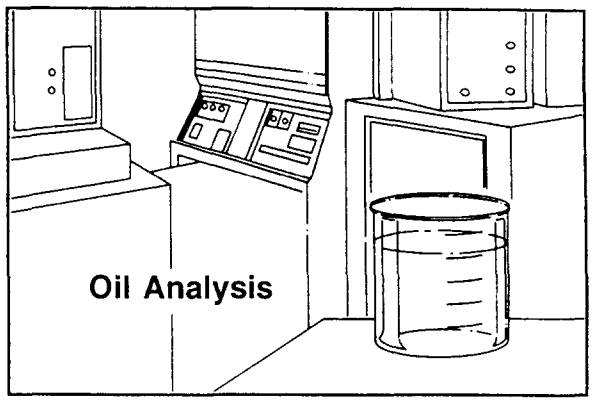


**Note:** Do not disassemble an engine for repair based only on the results of an oil analysis. Inspect the oil filters also. If the oil filter shows evidence of internal damage, find the source of the problem and repair the damage. Refer to the appropriate section(s) based on the following oil filter inspection.

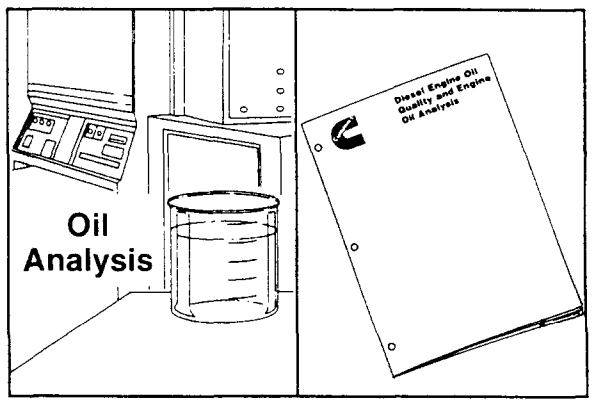


## Lubricating Oil Filter Inspection

**Caution: Carefully cut the full flow oil filter open. The filter element spring is under compression and can cause personal injury.**

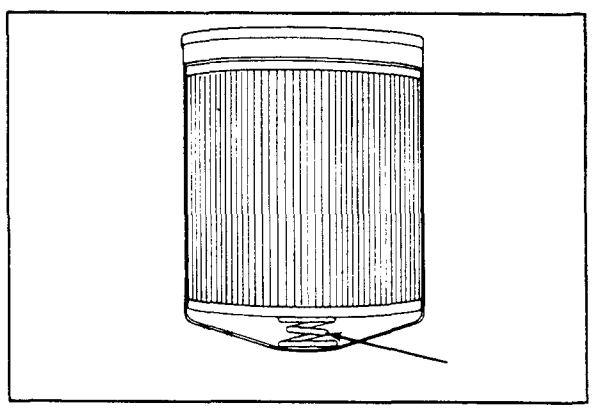

1. Visually check the condition of the threads and seals. Inspect the filter head if threads or external seal is damaged.
2. Use Part No. 3376579 or 3375301 Tube Cutter to open the full flow oil filter.
3. Inspect the filter element for evidence of moisture or metal particles.

| Metal | Probable Source |
|---|---|
| Copper | Bearings and Bushings |
| Chromium | Piston Rings |
| Iron | Cylinder Liners |
| Lead | Bearing Overlay Material |
| Aluminum | Piston Wear or Scuffing |

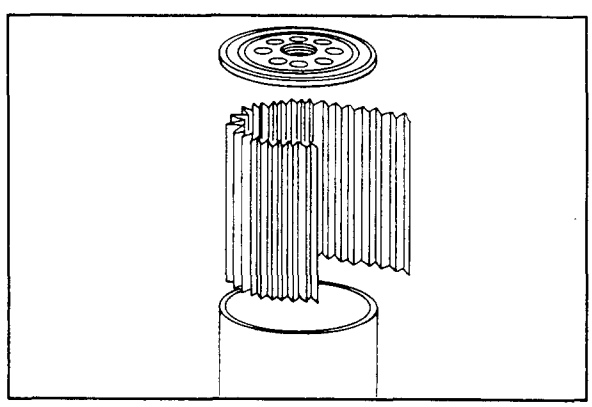

# Oil Leaks (External) - Checks (02-05)

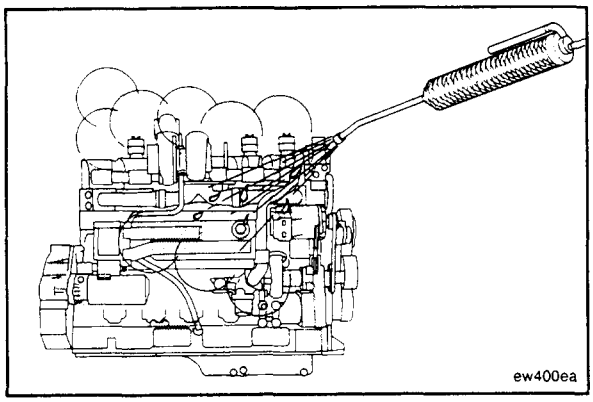


1. Use a steam cleaner or a high pressure washer to clean the engine.

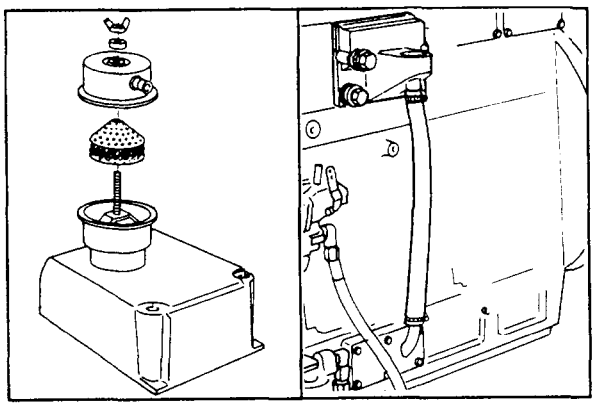

2. Check the engine crankcase breather elements and hose for restriction.

   If not restricted check blowby. Refer to Procedure 07-03. High blowby can cause gasket and seal leakage.

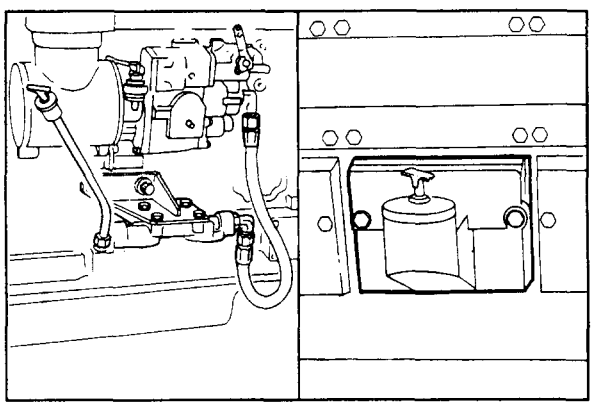

3. Check for a loose, broken, or missing oil dipstick tube, dipstick, or oil filler cap.

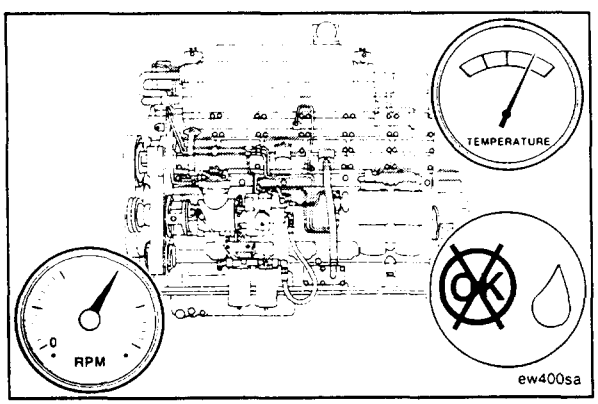


4. Operate the engine until the coolant temperature reaches 80°C [180°F]. Inspect the exterior of the engine for leaking gaskets, seals, o-rings, pipe plugs, or fittings.

**Note:** Before replacing any gaskets, check the capscrews to make sure they are tightened to the correct torque values. Refer to Chapter 10 for capscrew torque specifications.

# Oil System - Leak Check Using Dye (02-06)

1. Add one unit of Part No. 3376891 Fluorescent Tracer to each 38 liters [10.0 U.S. gallons] of engine lubricating oil. Refer to Reference 02-02 for oil capacity specifications.
2. Operate the engine at low idle for 10 minutes.

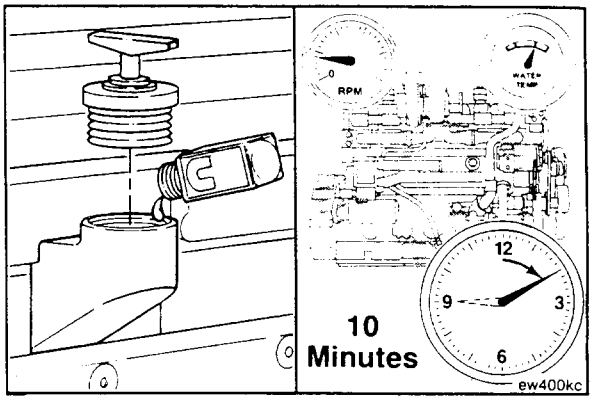


3. Shut the engine off.

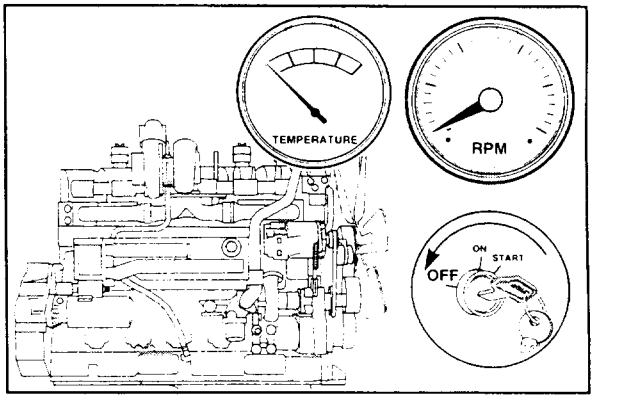


4. Use a high intensity black light (Part No. 3377253 or 3377394) to inspect for oil leakage. Oil will glow a dark blue color. Fuel will glow a yellow color.

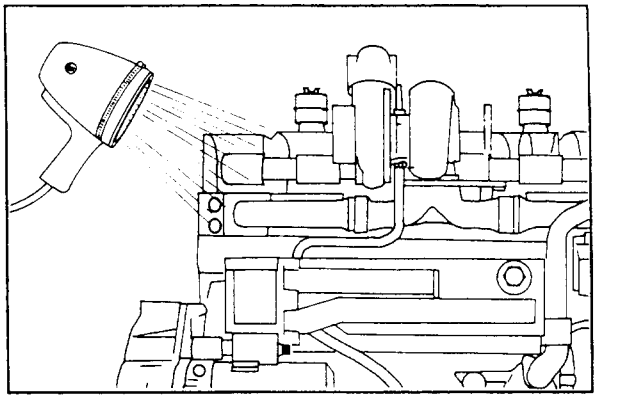

5. If an oil leak into the coolant is suspected, check the coolant.

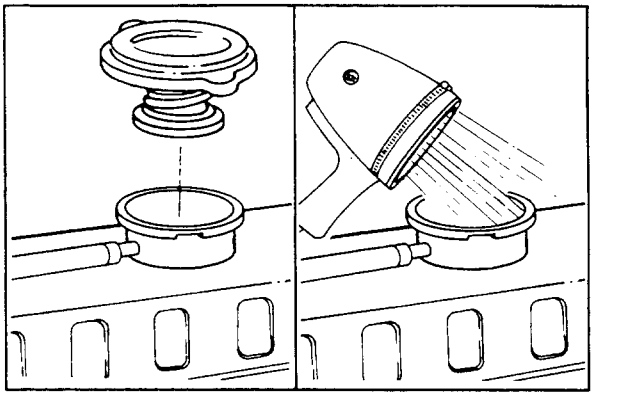

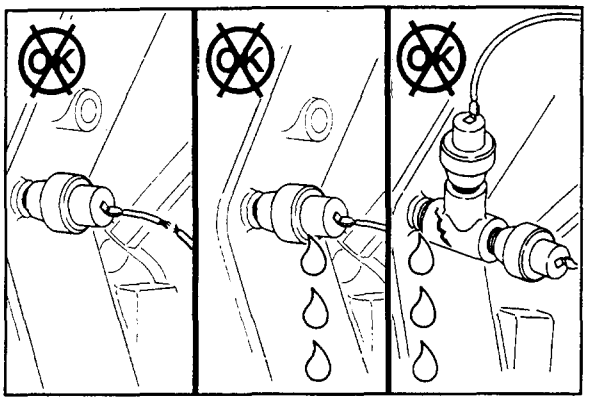

## Oil Pressure Gauge - Check (02-07)

1. Check the following for defects:
   a. Electrical wiring broken.
   b. Sending unit malfunction.
   c. Plumbing loose or broken.

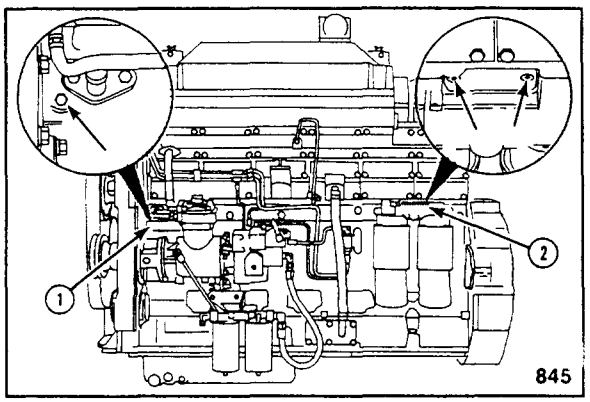


2. Use a reference gauge of known accuracy to verify the reading of the suspect gauge.
3. Connect the line from the master gauge at location (1). If this location is not accessible, remove one of the two pipe plugs in the lubricating oil filter head (2).

   Minimum Gauge Capacity: 830 kPa 120 psi
4. Replace the sending unit if it is defective.

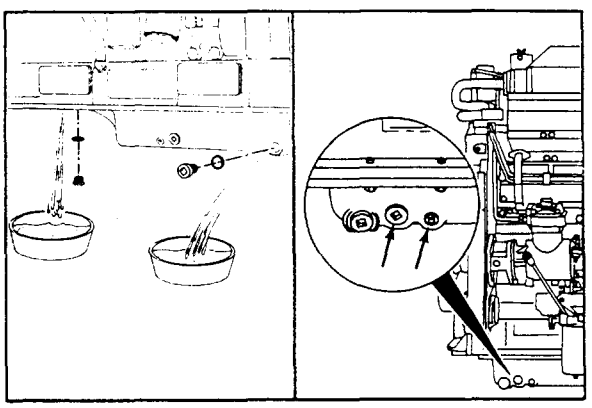

## Oil Temperature Gauge - Check (02-08)

1. Drain the oil from the oil pan. Refer to Procedure 02-09.
2. Remove one of the pipe plugs on either side of the oil pan.
3. Install a reference gauge of known accuracy to verify the reading of the suspect gauge.

   Minimum Gauge Capacity: 150°C [300°F]

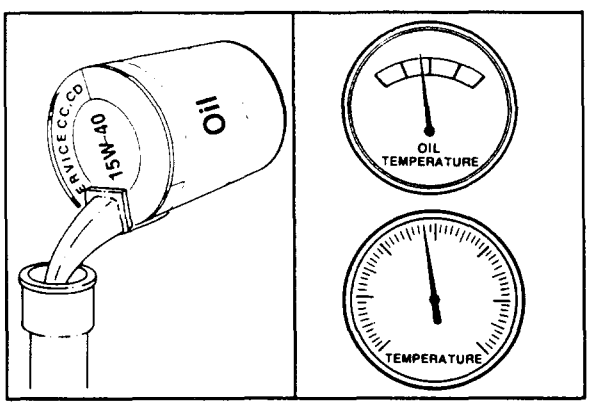


4. Fill the engine with oil Refer to Procedure 02-10 for oil capacity.
5. Operate the engine. Compare the temperature reading of the master gauge and the suspect gauge.

6. If the suspect gauge does not read the same temperature as the reference gauge, check the following for defects:
   a. Electrical wiring.
   b. Sending unit malfunction.
   Replace the defective parts.

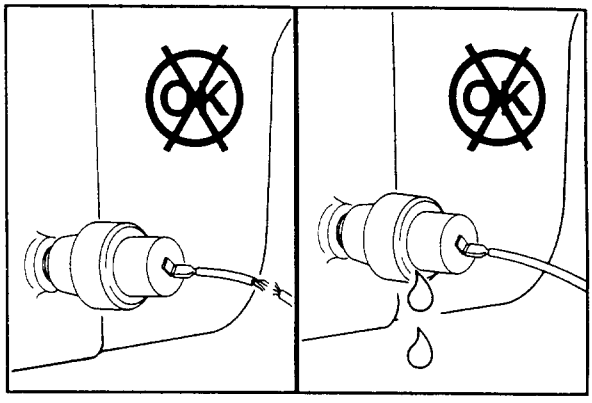

7. Drain the oil from the oil pan. Refer to Procedure 02-09.
8. Remove the reference gauge. Tighten the pipe plug to specification. Refer to Section 10 for general pipe plug torques.

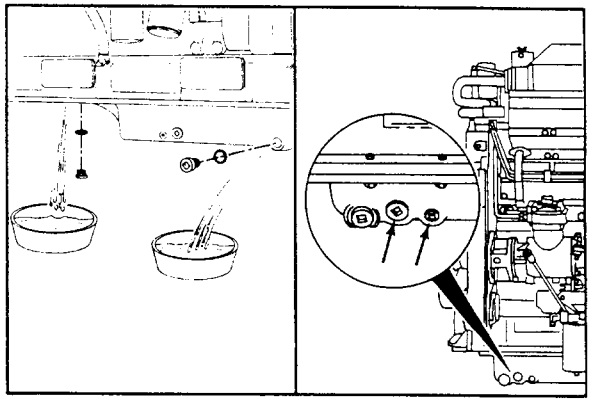

9. Fill the engine with oil. Refer to Procedure 02-10 for oil capacity.
10. Operate the engine to normal operating temperature. Check for leaks.

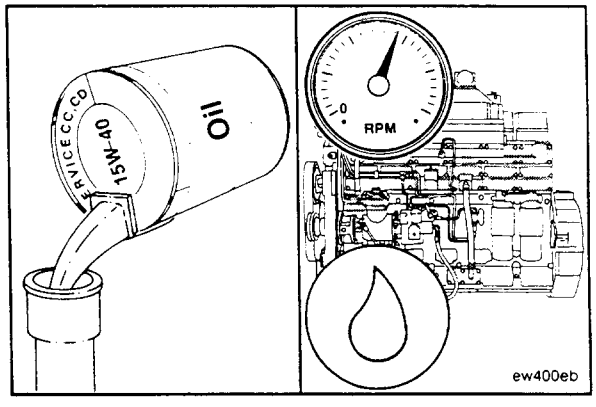


## Drain Oil (02-09)

**Warning: Hot oil can cause serious personal injury.**

**Note:** Drain the oil when the oil temperature is approximately 60°C [140°F].

1. Remove the oil drain plug and copper washers from the bottom of the oil sump and the oil pan adapter cover plate.
2. Drain the oil. Replace the washers and plugs. Tighten the drain plugs to 100 N•m [75 ft-lb].

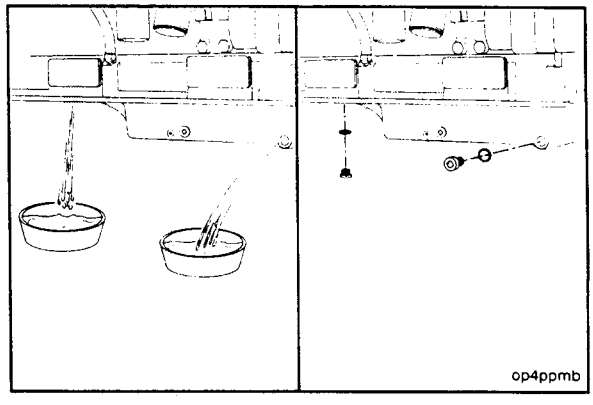

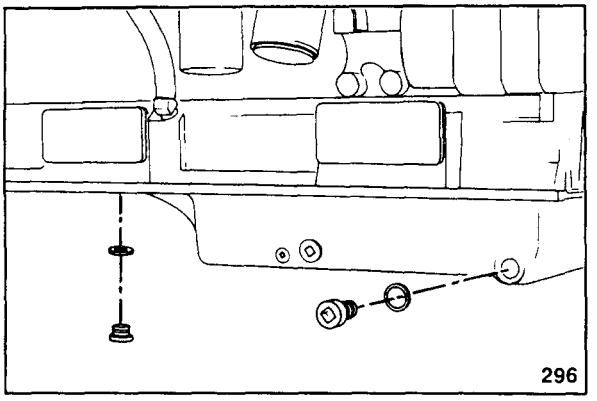


# Oil Pan - Fill (02-10)

1. Install the oil drain plugs and tighten them to 100 N•m [75 ft-lb].
2. Add the specified amount of clean 15W-40 oil to fill the oil pan.

| Oil Pan Part No. | Liters | Oil Capacity (High Mark) U.S. Gal. |
|---|---|---|
| 3008538 | 38 | 10 |
| 207304 | 47 | 12.5 |
| 3006484 | 47 | 12.5 |
| 3009643 | 47 | 12.5 |
| 3200709 | 47 | 12.5 |
| 205881 | 64 | 17 |
| 3032521 | 68 | 18 |
| 3024391 | 72 | 19 |

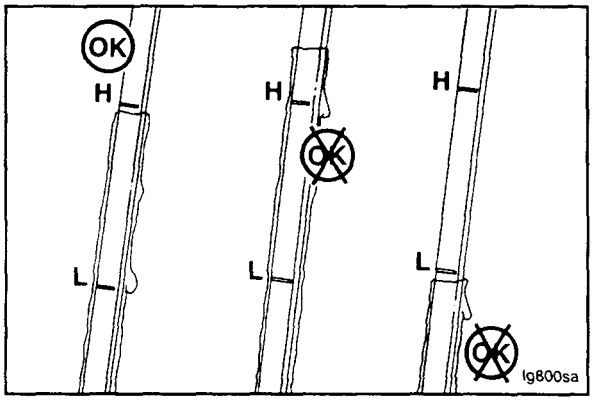


**Note:** If the engine contains a rear gear train, add 7.6 liters [2 U.S. Gal.] to the values listed in the table above, to bring the oil level to the high mark.

3. Check the oil level on the dipstick. The level must be to the "H" (high) mark.

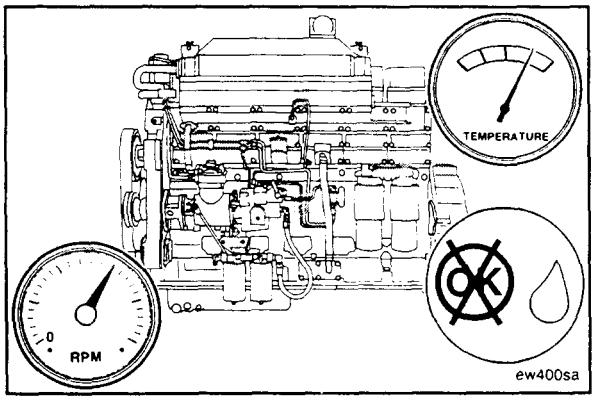


4. Operate the engine to normal operating temperature and check for oil leaks.

5. Shut the engine off and wait 5 to 7 minutes for the oil to drain back to the oil pan.
6. Check the oil level. Add oil as necessary to bring the level up to the "H" (high) mark on the dipstick.

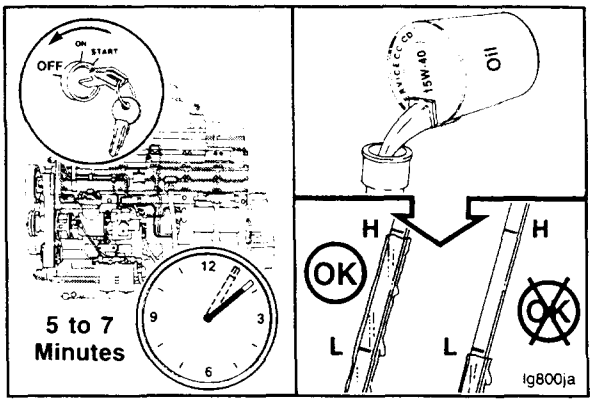


## Oil Filters (Full Flow And Bypass) - Replace (02-11)

### Remove

1. The external appearance of the full flow (1) and the bypass (2) filters is the same. The accompanying picture identifies the difference between the two filters.

**Note:** The full flow filter contains 1 1/2-16 inch threads. The bypass filter contains 1 3/8-16 inch threads.

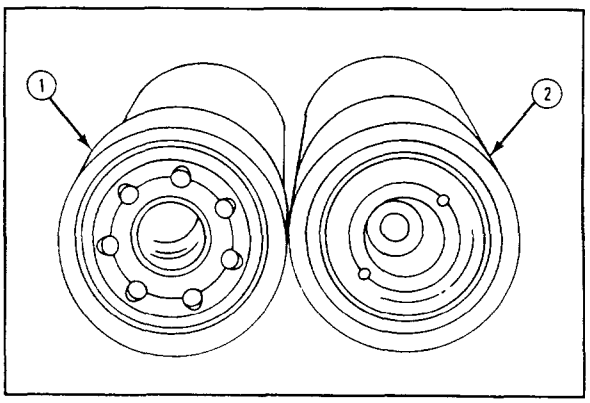


**Note:** The following illustrations show the full flow oil filter. Use the same procedure when changing the bypass oil filters.

2. Use an oil filter wrench, Part No. 3375049, or equivalent. Remove the full flow oil filters.
3. Discard the filters if they are not needed for a failure analysis.

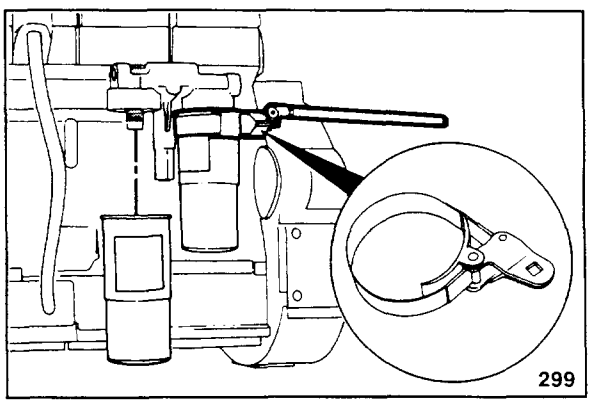


### Install

1. Clean the oil filter head surface.

**Caution: Do not use Fleetguard No. LF 3325 filters on K19 engines. The cannister seam will touch the head before the seal touches the sealing surface. An oil leak will result.**

2. Use engine oil to lubricate the gasket surface of the filters.

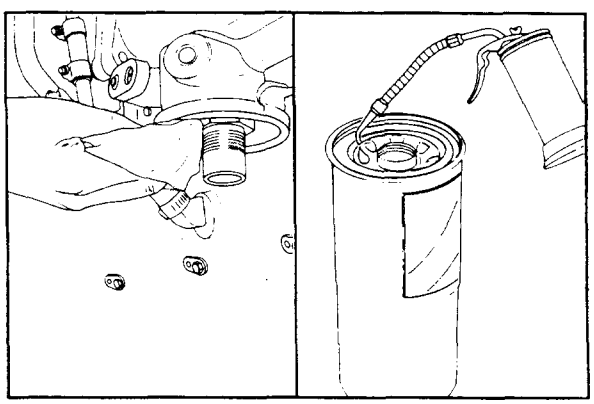

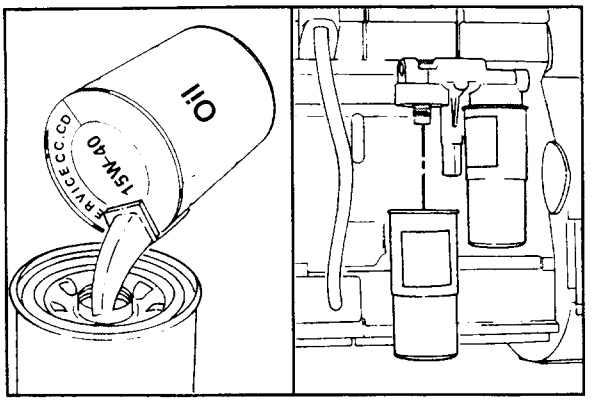


3. Fill the filters with clean 15W-40 oil. Install the filters on the oil filter head.

**Note:** Mechanical overtightening may distort the threads or damage the filter element seal.

4. Turn the filter until the seal contacts the head. Turn an additional three-fourths of a turn to one turn.

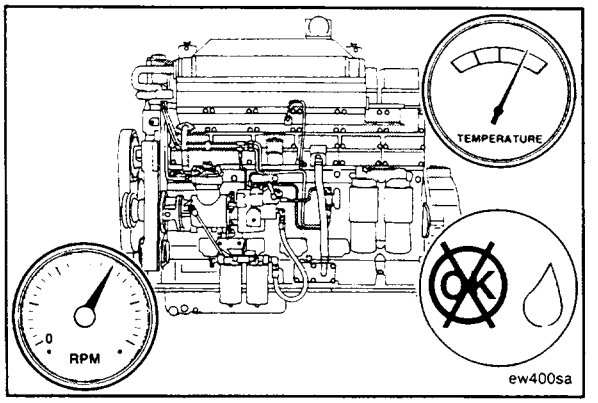


5. Operate the engine, and check for leaks.

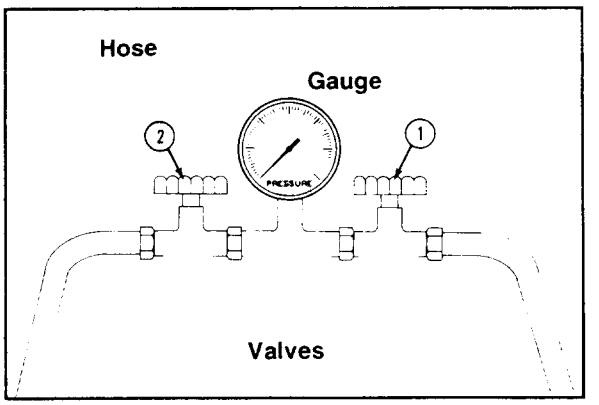


## Oil Filter (Full Flow) - Measure Pressure Drop (02-12)

1. Use a differential pressure gauge or one pressure gauge with two oil hoses and two valves to eliminate gauge error. Minimum Gauge Capacity should be 517 kPa [75 psi].

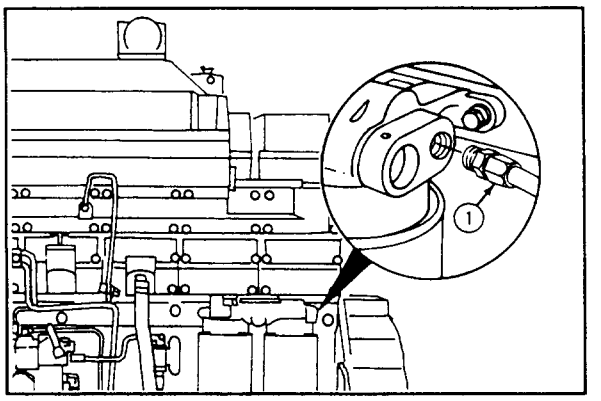


2. Install one hose in the [3/8-NPTF inch] pipe plug hole (1).

   This reading will indicate oil pressure before the oil goes through the filters.

3. Install the other hose in either the [1-NPTF inch] pipe plug hole (2) or one of the two [1/8-NPTF inch] pipe plug holes (3).

   This reading will indicate oil pressure after the oil goes through the filters.

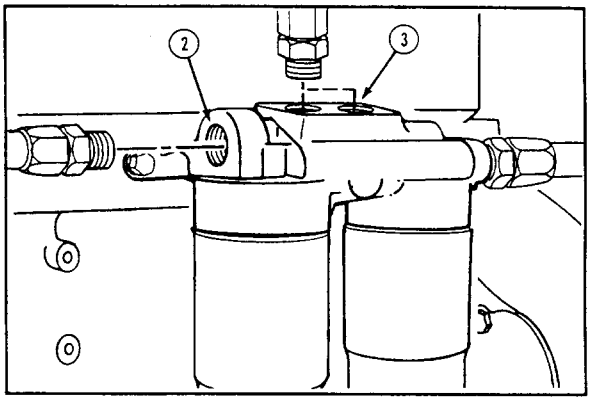


4. Operate the engine at rated RPM and normal operating temperature.

   Open the valve to read pressure after the filter first.

   Then close the valve and open the other valve to read oil pressure before the filter.

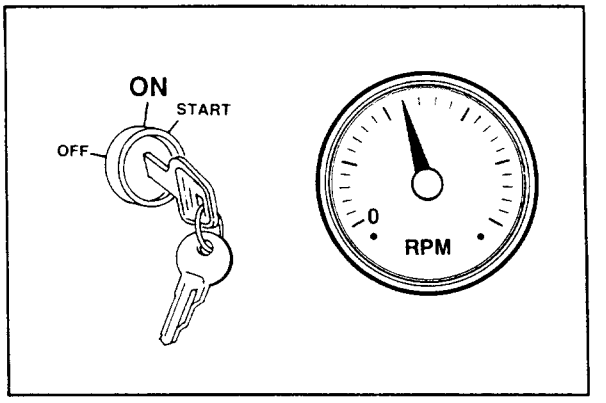


5. If the difference in pressure is more than 207 kPa [30 psi], replace the filters.
6. If the difference in pressure using clean oil filters is more than 69 kPa [10 psi], an oil filter with excessive restriction is being used. Replace the oil filters.

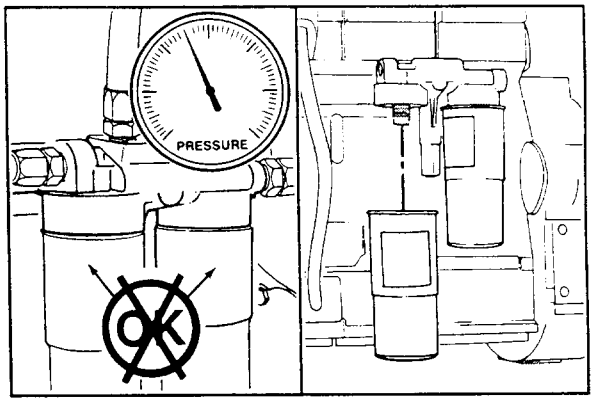


## Crankcase Breather And Tube - Replace (02-13)

### Remove

1. Loosen the hose clamp at the breather vent tube.
2. Remove the tube support bracket capscrews and the brackets.
3. Remove the tubes and the hoses from the engine.

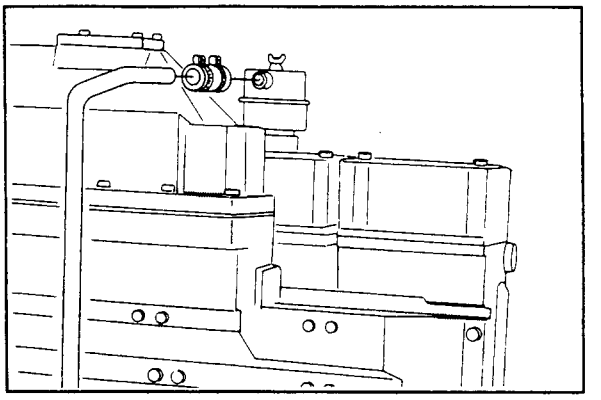

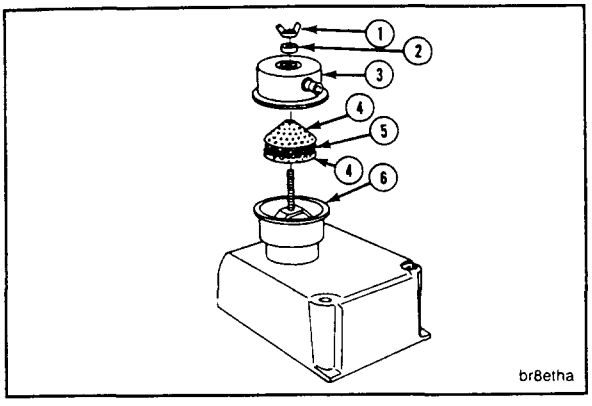


4. Remove the following parts from the breather body(6):
   (1) Wing nut
   (2) Washer
   (3) Breather Cap
   (4) Screen mesh
   (5) Element
   (4) Screen mesh

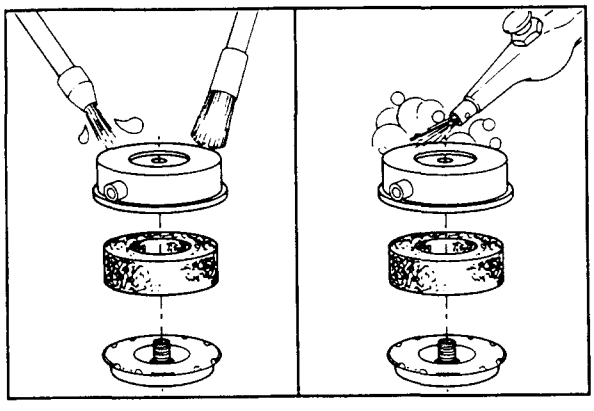

## Check For Reuse

1. Use solvent to clean the screen and wire mesh breather element. Dry it with compressed air.
2. Check the parts for damage.

Note: Foam-type breather elements and vapor barriers (shown) must be replaced if damaged or dirty. If the breather body or cover is damaged, the entire assembly must be replaced. Refer to the K19 Shop Manual.

3. Check the breather tube for restriction.

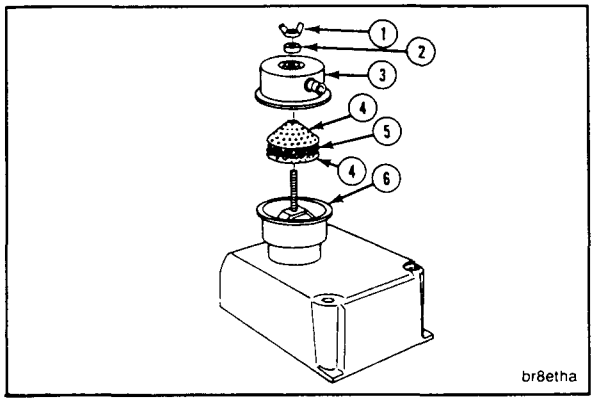


## Install

1. Install the parts in the following sequence:
   (4) Screen mesh
   (5) Element
   (4) Screen mesh
   (3) Breather cap
   (2) Washer
   (1) Wing nut

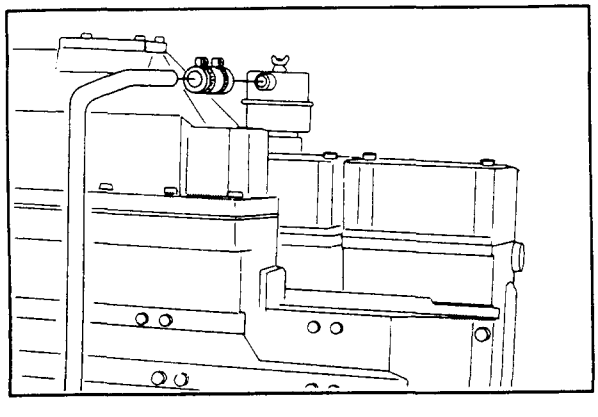

2. Install the breather vent tube.
3. Tighten the hose clamp to 5.6 N•m [50 in-lb].

# Dipstick Tube - Replace (02-14)

## Remove

1. Remove the dipstick and dipstick tube.

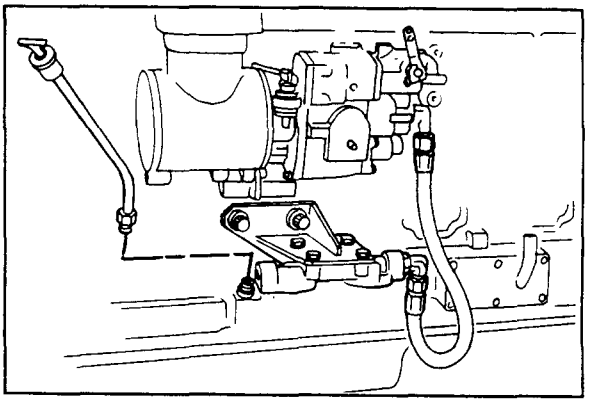

## Install

**Note:** The dipstick tube and fuel filter mounting locations vary by application.

1. Install the dipstick tube. Tighten the nut three-quarters of a turn to one turn after contact with the ferrule.

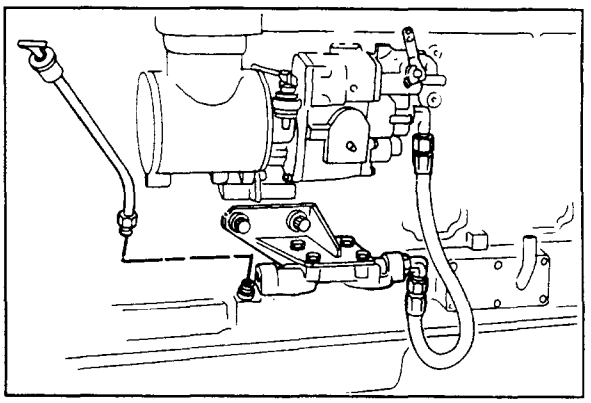

# Dipstick - Calibrate (02-15)

1. Remove the [1/8-NPTF inch] pipe plug (1) from the oil pan adapter.

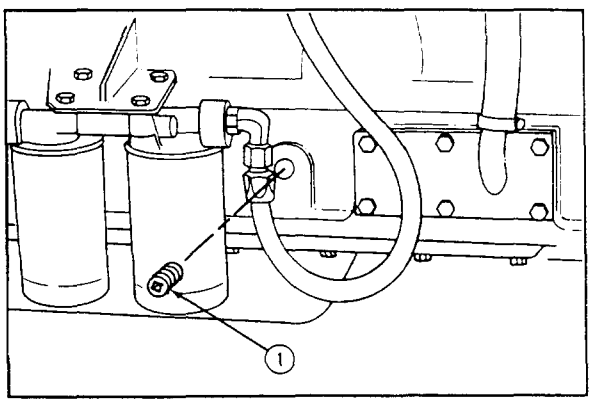


2. Install the dipstick in the dipstick tube housing.

   Use clean 15W-40 oil to fill the oil pan until the oil reaches the level of the pipe plug hole. This is the "HIGH" mark.

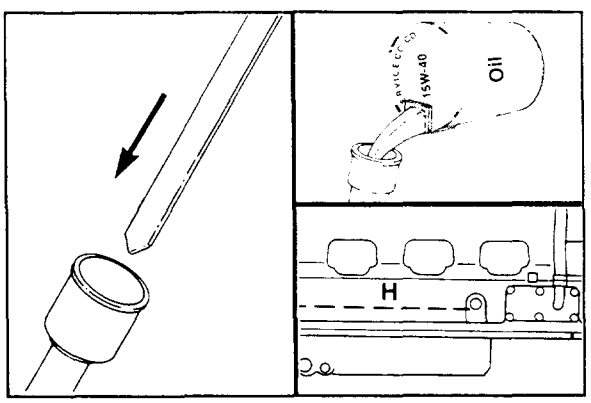

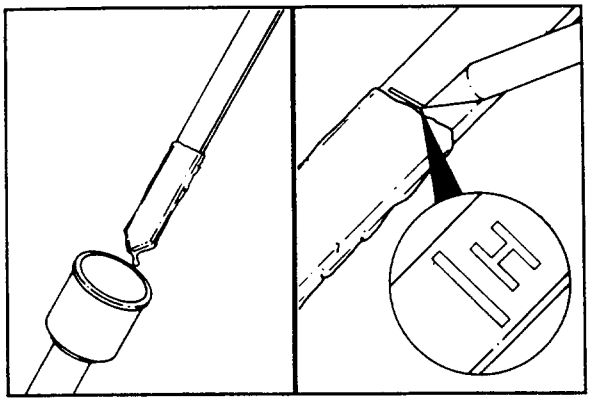


3. Remove the dipstick and scribe a mark across the dipstick at the oil level. Mark the "HIGH" oil level with an "H".

**Note:** The dipstick will break if the scribe mark is too deep.

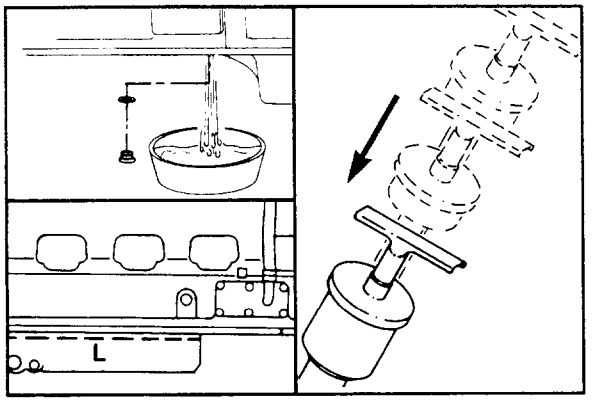


4. Drain the correct amount of oil to change the level to the "LOW" mark. Refer to Procedure 02-09.
5. Install the dipstick tube.

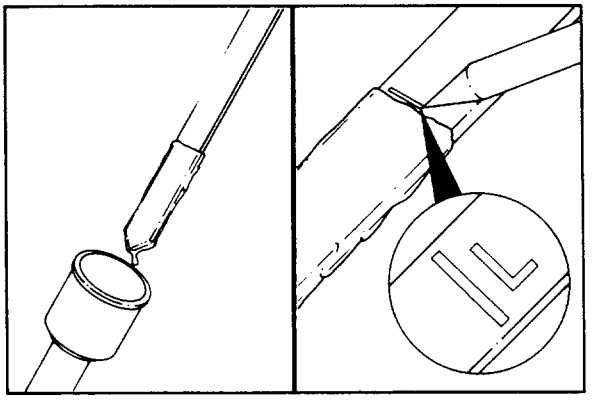


6. Remove the dipstick, and scribe a mark across the dipstick at the oil level. Mark the "LOW" oil level with an "L".

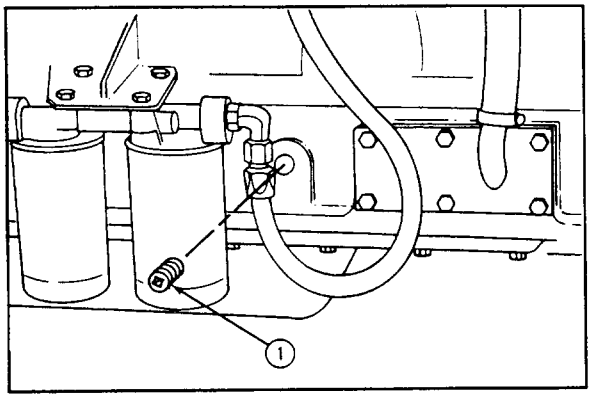


7. Install the [1/8-NPTF inch] pipe plug (1) in the oil pan adapter. Tighten to 15 N•m [10 ft-lb].

# Oil Pan - Replace (02-16)

## Remove

1. Drain the lubricating oil. Refer to Procedure **02-09**.

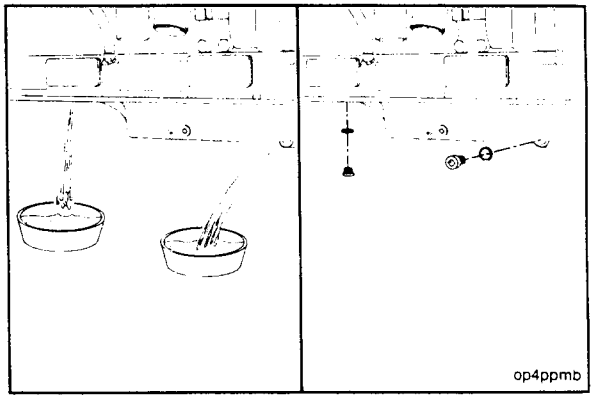


2. Remove the capscrews, the oil pan sump and the oil pan adapter cover. Remove and discard the gaskets.

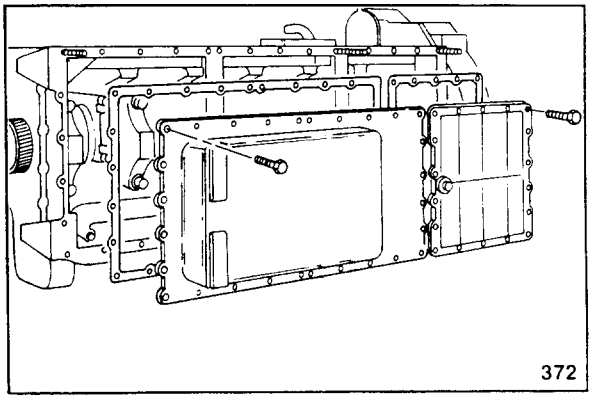


## Check For Reuse

1. Use solvent that will not harm aluminum. Clean the parts.
2. Visually inspect for cracks or other damage.

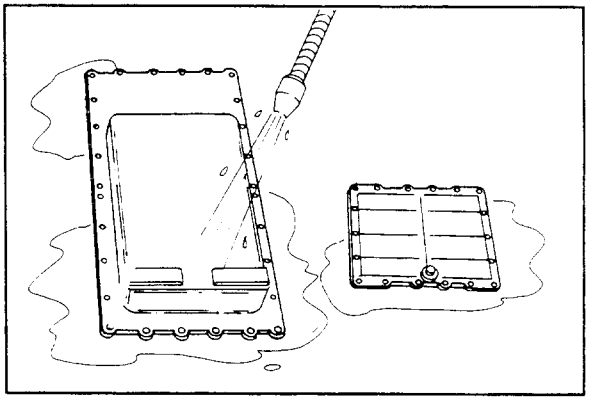

## Install

**Caution: Gasket cement will prevent the gasket from sealing properly.**

**Note:** Use a contact adhesive such as 3M Spray 77 or 3M 4693 to hold the gasket in position.

1. Install the gaskets, oil pan and oil pan adapter cover.

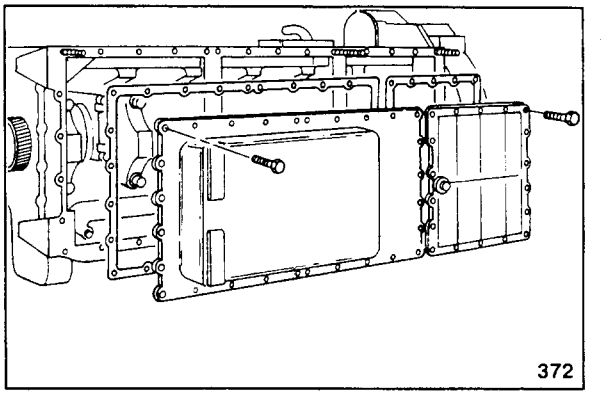

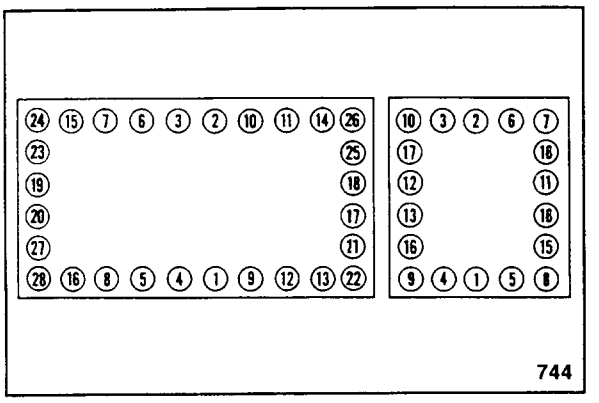


2. Use the sequence shown and tighten the capscrews to 45 N•m [35 ft-lb].

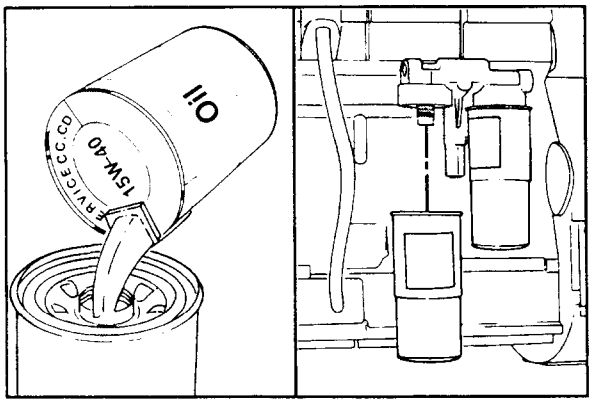


3. Install new oil filter elements. Refer to Procedure 02-11.

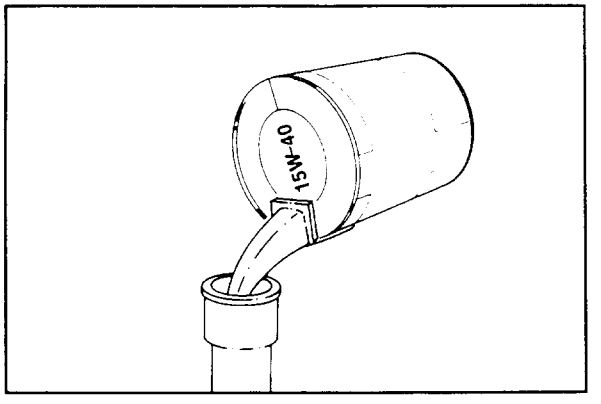


4. Fill the engine with clean 15W-40 oil. Refer to Procedure 02-10 for engine oil capacity.

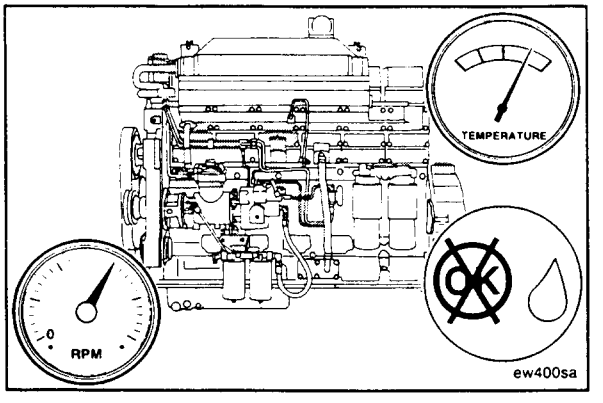


5. Operate the engine to normal operating temperature and check for leaks.

# Oil Pan Adapter - Replace (02-17)

## Remove

1. Remove the oil pan and oil pan adapter cover. Refer to Procedure 02-16.

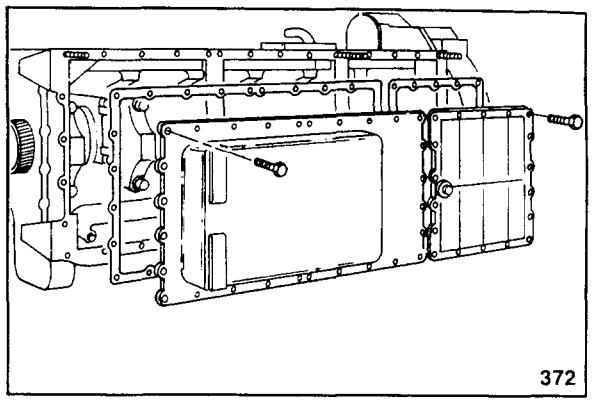


2. Remove the three capscrews from the suction tube. Remove the oil pan suction tube. Remove and discard the gasket.

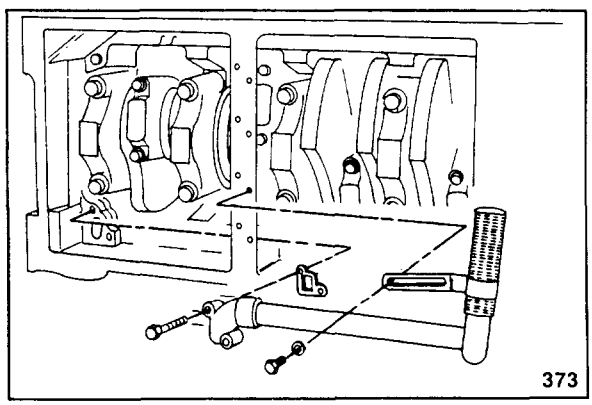


3. Remove the breather drain hose (21) from the hand hole cover.

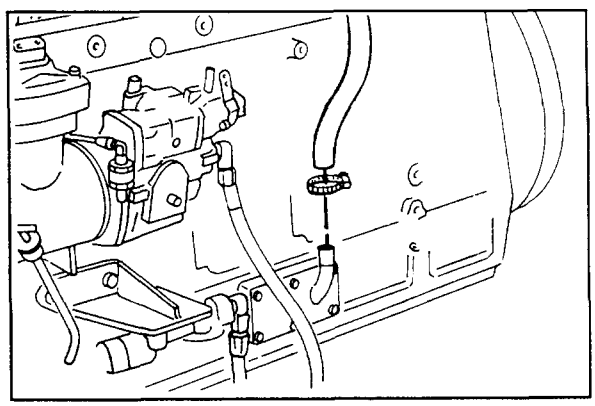

4. Remove turbocharger oil drain hose(s) from the hand hole covers.

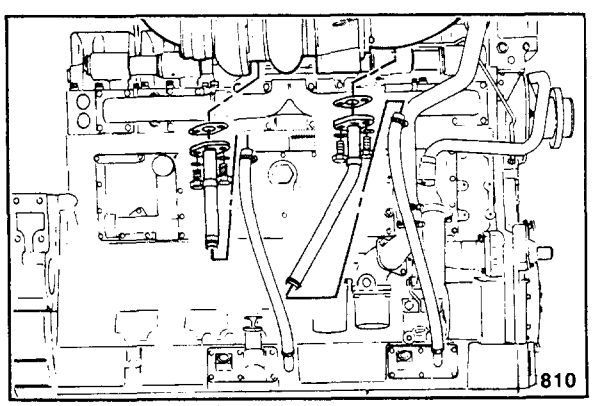

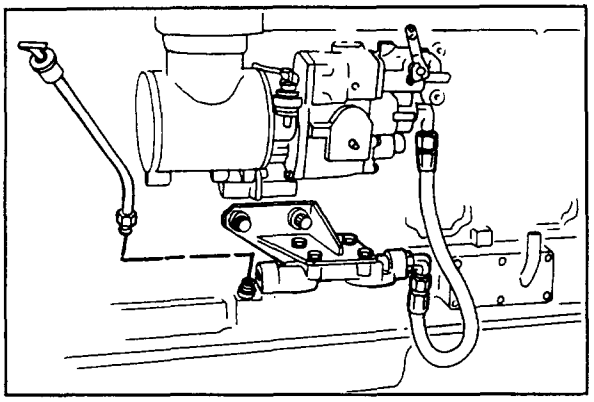

5. Remove the dipstick and dipstick tube.

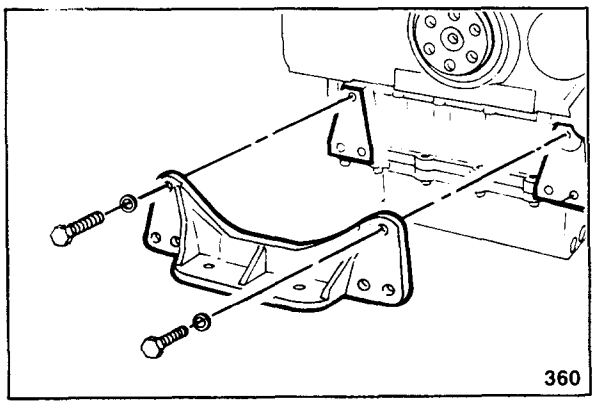


6. Remove the front engine support. Refer to Procedure 07-46.

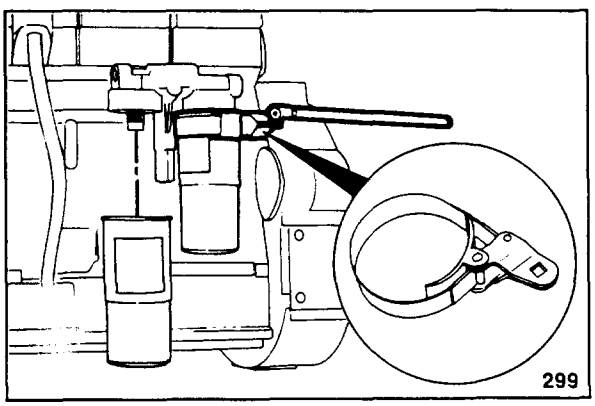


7. Use an oil filter wrench, Part No. 3375049, or equivalent. Remove the full flow oil filters.

   Discard the filters if they are not needed for failure analysis.

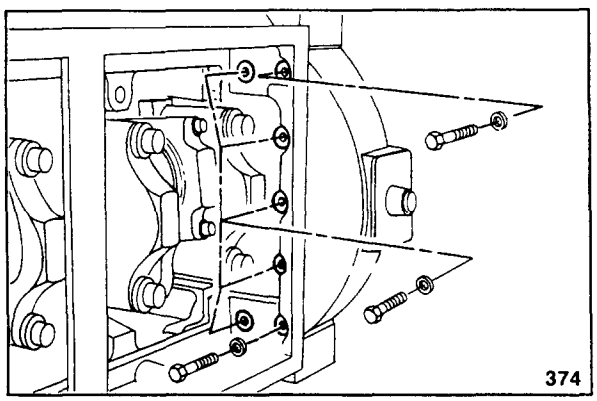


8. Remove the two [7/16-14 inch] capscrews, and the five [3/8-16 inch] capscrews from the flywheel housing.

**Note:** You will need help from another person or a floor jack to lower the adapter to floor.

9. Remove all of the capscrews and the pan adapter. Remove and discard the gasket, the two rectangle seals (41), and the seven bolt seals (42) from the adapter.

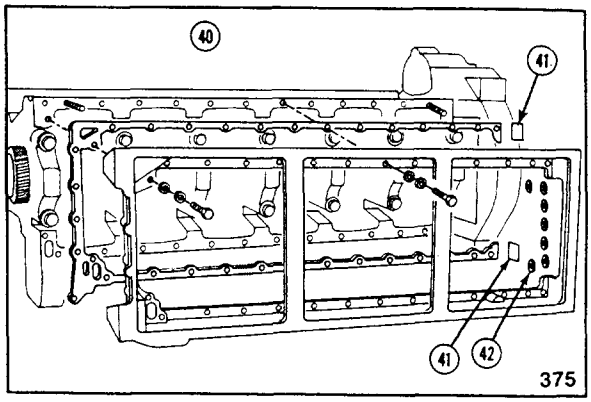


## Check For Reuse

1. Use a solvent that will not harm aluminum. Clean the parts.
2. Visually inspect for cracks or other damage.

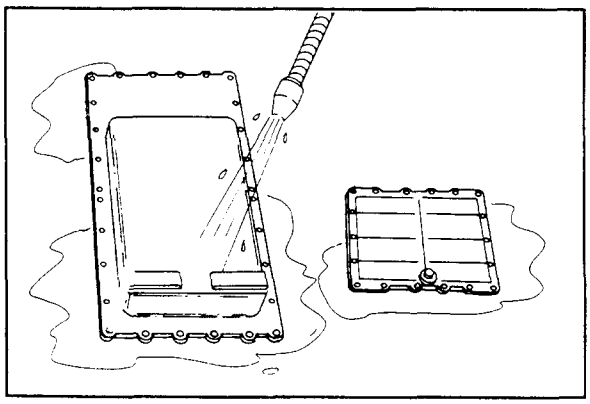

## Install

**Note:** Use a contact adhesive such as 3M Spray 77 or 3M 4693 to hold the bolt seals in place.

1. Install the four bolt seals on the oil pan adapter.
2. The two rectangular seals have an adhesive on one side. Remove the protective paper strips from the seals. Install the seals on the oil pan adapter.

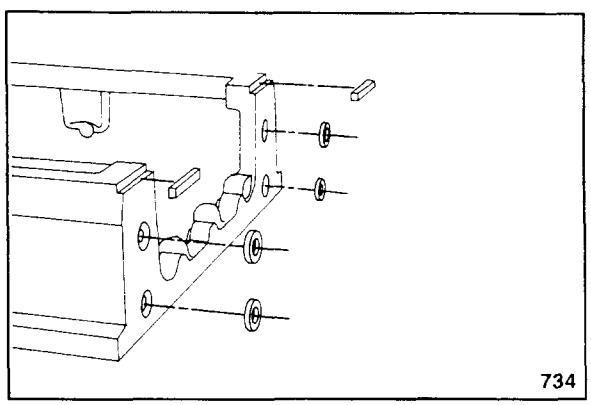


**Caution: Gasket cement will prevent the gasket from sealing properly.**

**Note:** Use a contact adhesive such as 3M Spray 77 or 3M 4693 to hold the gasket in position.

3. Install the gasket. Be sure the gasket touches the rectangular seals.

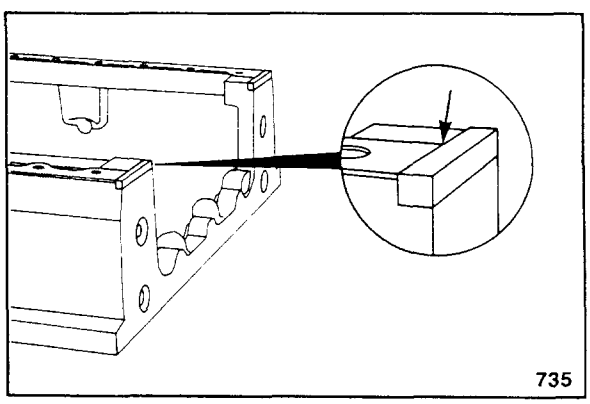

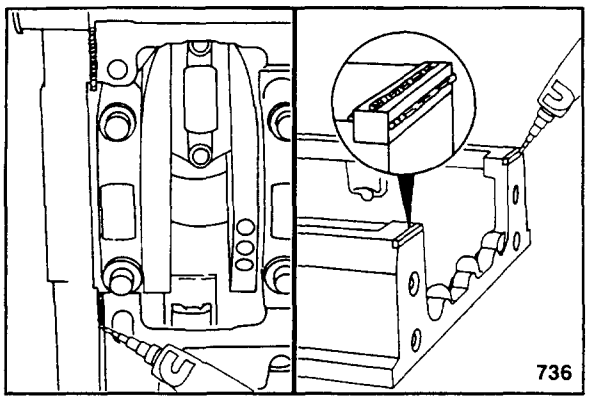


4. Use Cummins sealant, Part No. 3377132, or equivalent. Apply the sealant as shown.

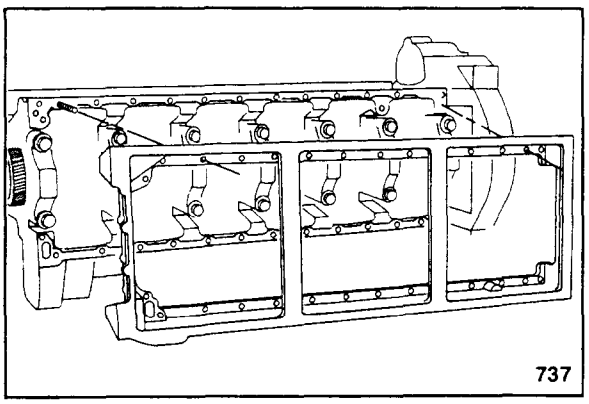


**Note:** You will need help from another person or a floor jack to lift the adapter into place.

5. Install two guide studs in the block.

**Note:** Be sure the seals remain in place when the adapter is installed.

6. Lift the adapter over the guide studs and up against the block surface. Hand tighten four capscrews to hold the adapter in place.

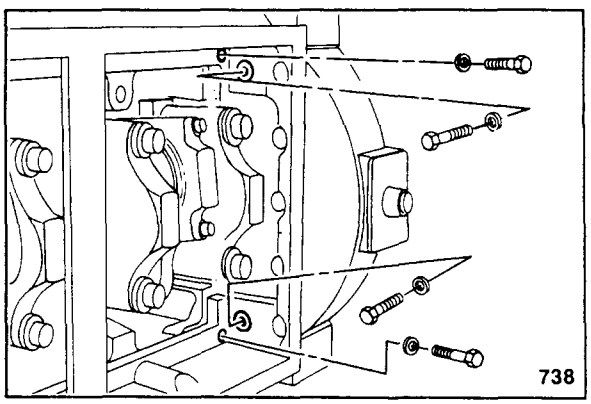


**Note:** The four capscrews shown must be tightened alternately and evenly to make sure the adapter is pulled evenly to the block and flywheel housing.

7. Install the four washers and capscrews as shown. Push the adapter towards the block and flywheel housing while tightening the capscrews.

8. Use the following steps while tightening the capscrews.

| Oil Pan Adapter Capscrew Torque Values | | |
|---|---|---|
| Step | N•m | ft-lb |
| 1 | 15 | 10 |
| 2 | 25 | 20 |
| 3 | 40 | 30 |
| 4 | 45 | 35 |

9. Install the three capscrews and tighten them in the sequence shown. Use the steps and torque values below when tightening the capscrews.

| Oil Pan Adapter Capscrew Torque Values | | |
|---|---|---|
| Step | N•m | ft-lb |
| 1 | 25 | 20 |
| 2 | 40 | 30 |
| 3 | 45 | 35 |

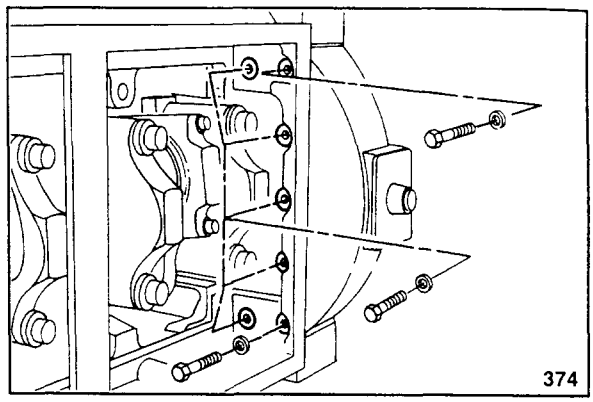


**Note:** Capscrews No. 24 through 28 thread into the front cover on engines with a one-piece type cover. They thread into the gear housing on engines with the two-piece type cover.

10. Install the remaining [3/8-inch] washers and capscrews. Tighten the capscrews to 45 N•m [35 ft-lb].

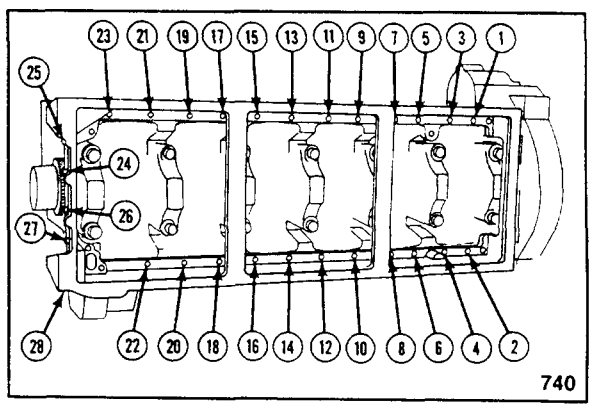


11. Install the two [7/16-inch] washers and capscrews shown. Tighten the capscrews to 65 N•m [50 ft-lb].

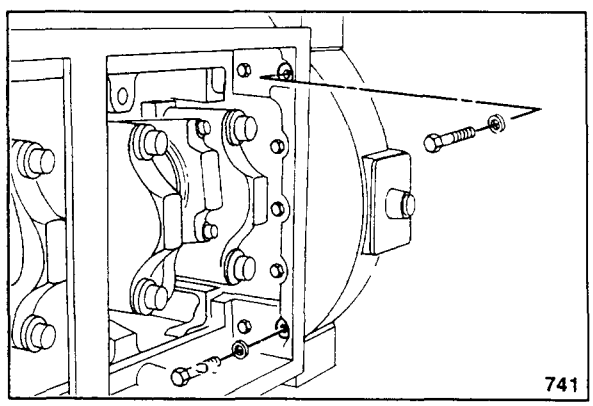


12. Install the [9/16-inch] washer and capscrew. Tighten the capscrew to 150 N•m [110 ft-lb].

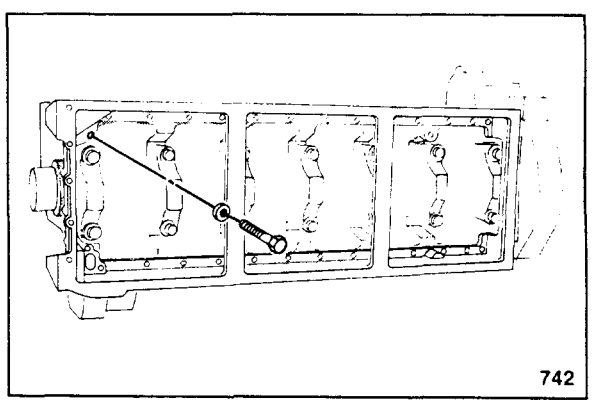

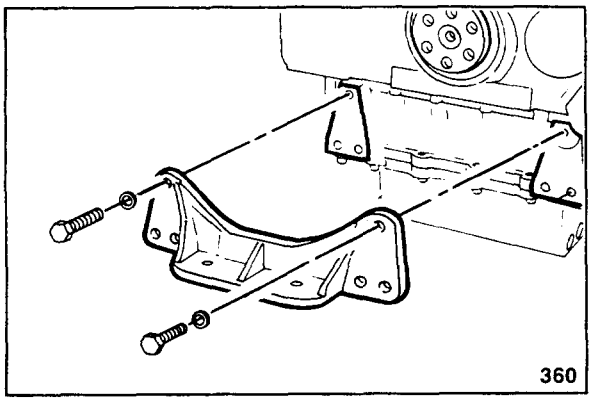


13. Install the front engine support. Refer to Procedure 07-46.

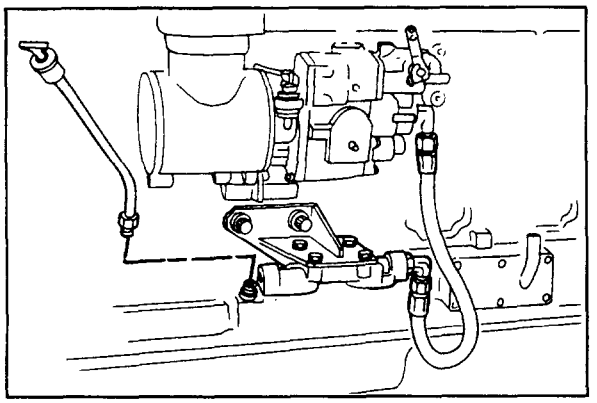

**Note:** The dipstick tube mounting locations vary with applications.

14. Install the dipstick tube and dipstick. Tighten the nut three-quarters of a turn to one turn after contact with the ferrule.

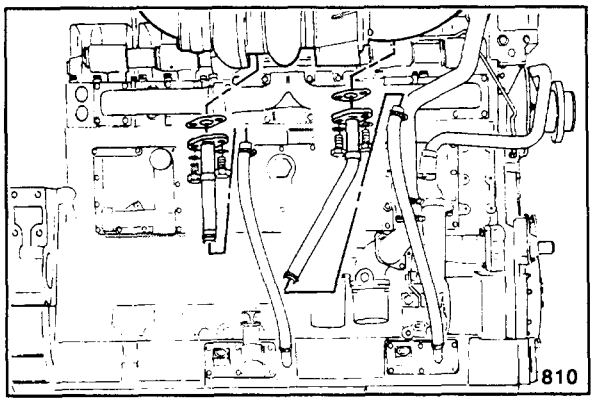


**Caution: These parts are a safety-related item. Be sure the parts are clamped correctly to prevent fretting.**

15. Install the oil drain hose(s) for the turbocharger(s) as shown. Tighten the hose clamps to 5.6 N•m [50 in-lb].

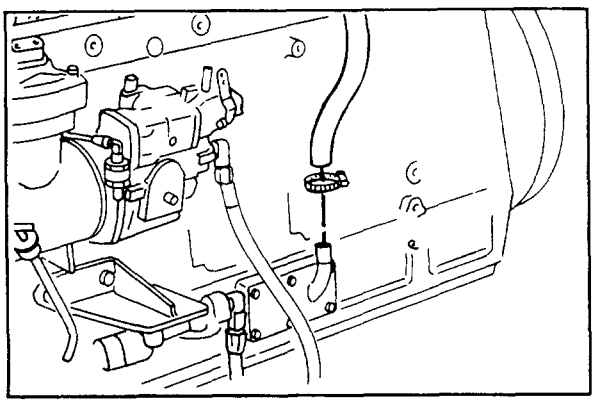

16. Install the breather drain hose to the hand hole cover. Tighten the hose clamps to 5.6 N•m [50 in-lb].

17. Install the gasket, oil pan suction tube, and capscrews. Tighten the two suction tube connector capscrews to 60 N•m [45 ft-lb]. Tighten the clamp capscrew to 35 N•m [25 ft-lb].

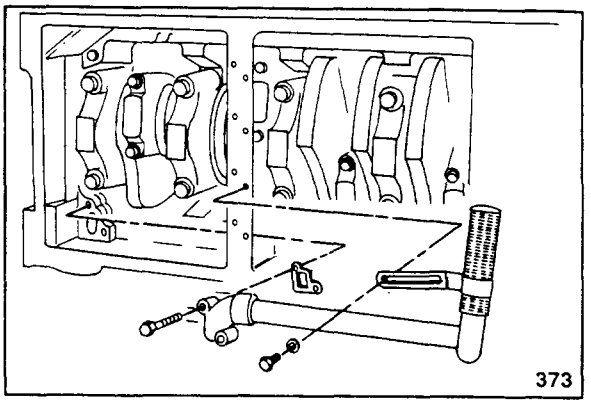


18. Install the oil pan and oil pan adapter cover. Refer to Procedure 02-16.

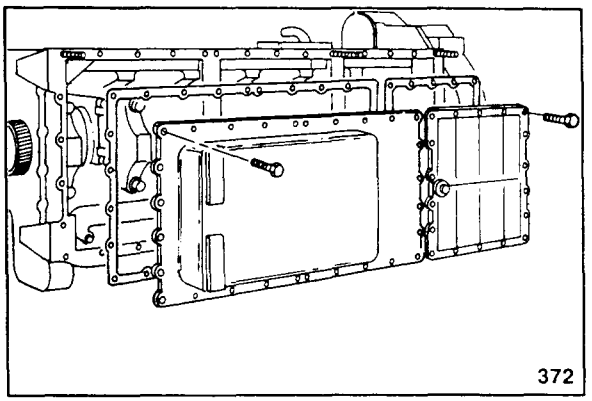


19. Install new oil filter elements. Refer to Procedure 02-11.

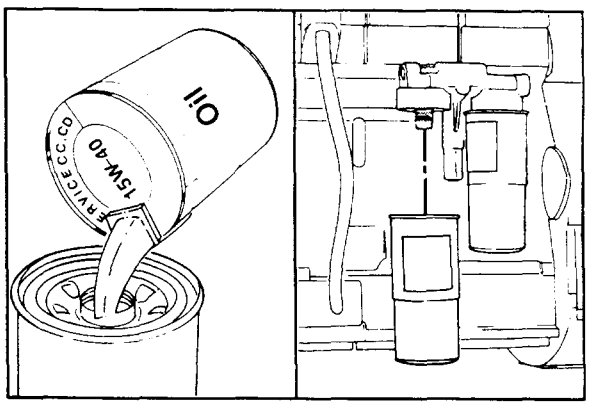


20. Fill the engine with clean 15W-40 oil. Refer to Procedure 02-10 for engine oil capacity.

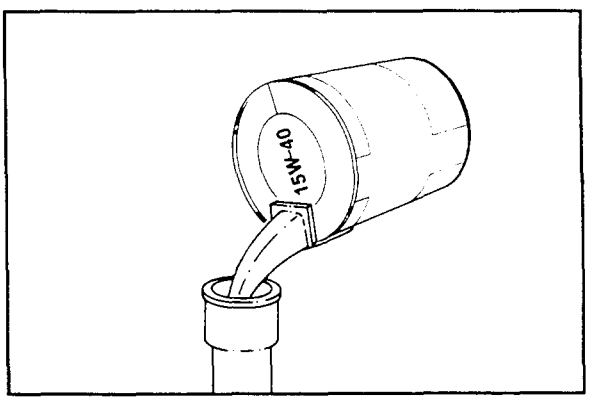

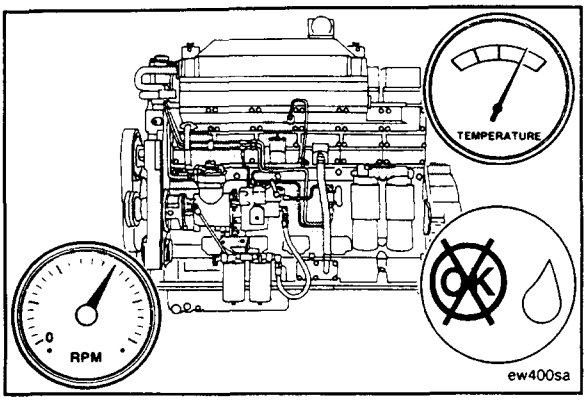


21. Operate the engine to normal operating temperature and check for leaks.

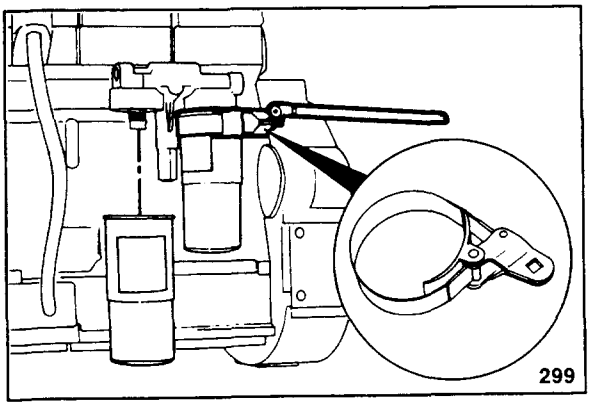


# Oil Filter Head - Replace (02-18)

## Remove

1. Use an oil filter wrench, Part No. 3375049, or equivalent. Remove the full flow oil filters.

   Discard the filters if they are not needed for failure analysis.

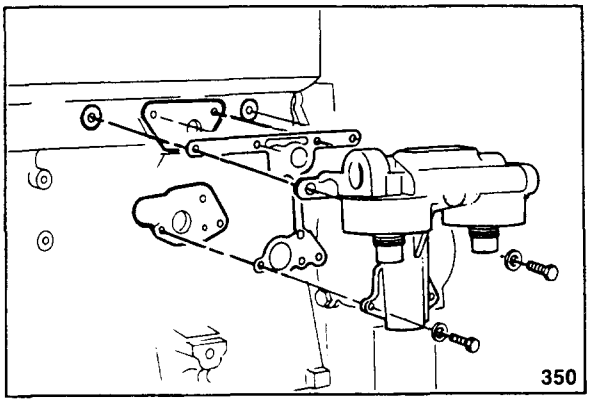


2. Remove the six capscrews and the filter head assembly. Remove and discard the gasket.

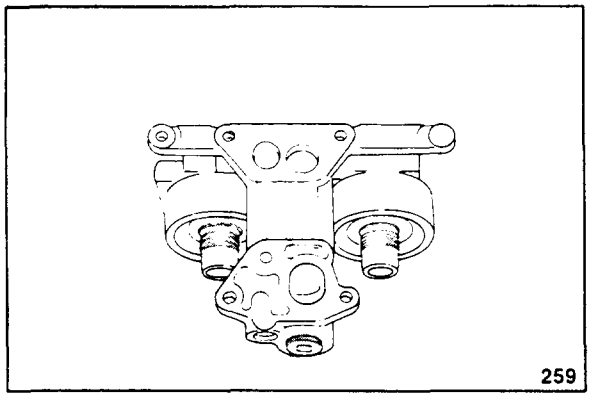


## Check For Reuse

1. Use solvent to clean the filter head.
2. Visually inspect for cracks or other damage.
3. Refer to the K19 Shop Manual to replace the piston cooling valve or the oil filter bypass valve.

## Install

1. Install the gasket, filter head and six capscrews. Tighten the capscrews to 45 N•m [35 ft-lb].

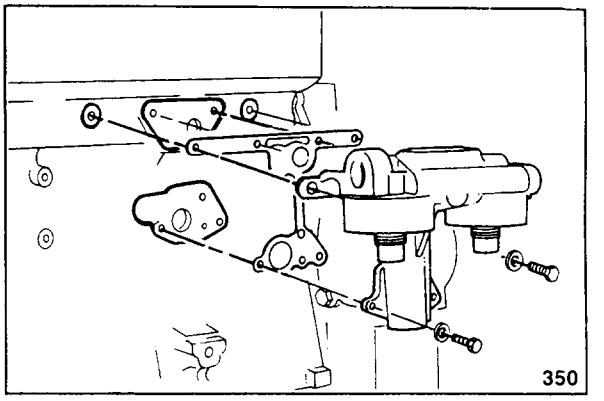


**Note:** Do not use Fleetguard No. LF3325 filters on K19 engines. The canister seam will touch the filter head before the seal touches the sealing surface. An oil leak will result.

2. Install new full flow oil filters. Refer to Procedure 02-11.

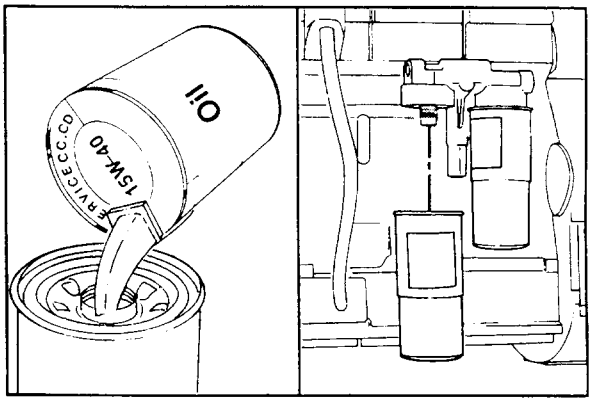


3. Fill the engine with clean 15W-40 oil. Refer to Procedure 02-10 for engine oil capacity.

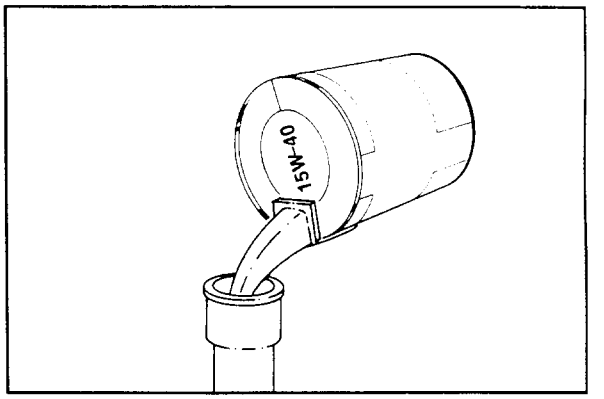


4. Operate the engine to normal operating temperature and check for leaks.

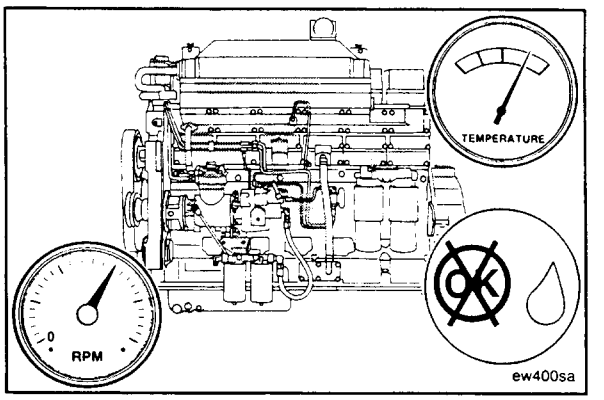

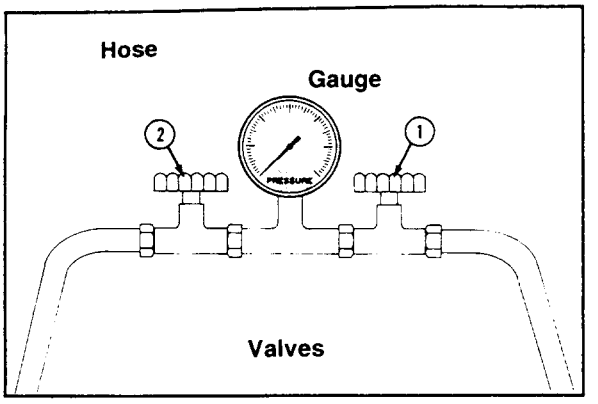


# Oil Cooler - Measure Pressure Drop (02-19)

1. Use a differential pressure gauge or one pressure gauge with 2 oil hoses and 2 valves to eliminate gauge error. Minimum gauge capacity should be 517 kPa [75 psi].

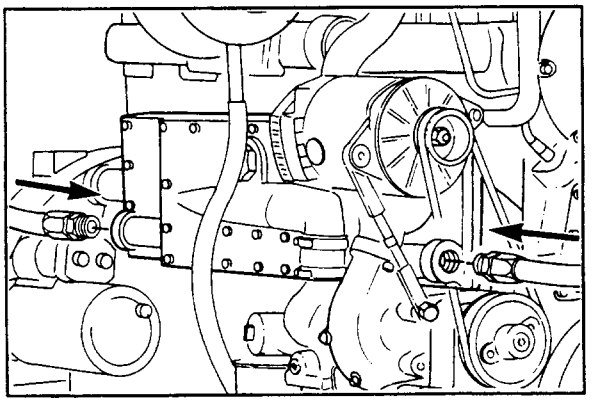

2. Install each hose into the [15/16-12 UNF inch] plugged holes at each end of the oil cooler housing.

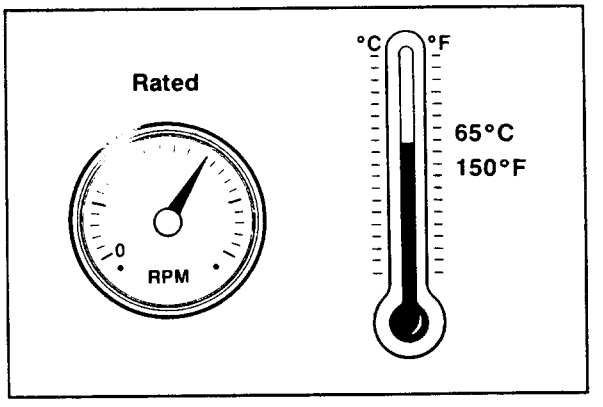


3. Operate the engine at rated rpm until the oil temperature is at least 65° C [150° F].

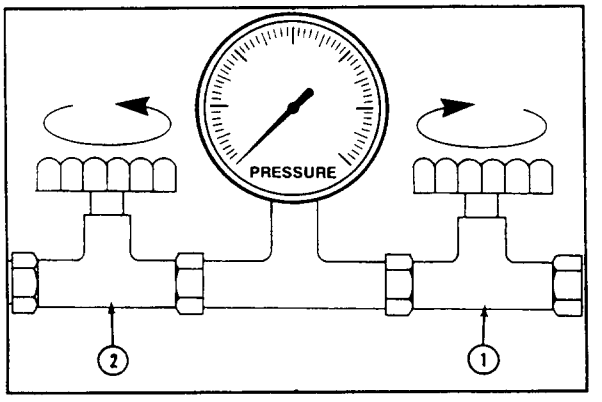


4. Close valve 1 and open valve 2. Read the oil pressure after the oil coolers.

5. Open valve 1 and close valve 2. Read the pressure of the oil being supplied to the oil coolers.
6. Compare the difference between the two pressures. If the difference is more than 138 kPa [20 psi], replace the oil cooler cores. Refer to Procedure 02-22.

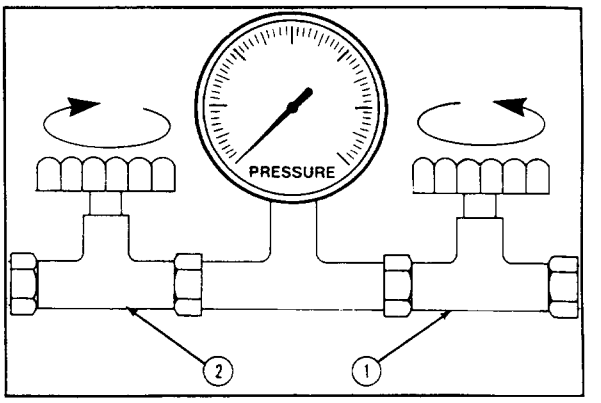


# Oil Cooler Cover - Replace (02-20)

## Remove

1. Open the draincock on the bottom of the radiator and remove the lower radiator hose to drain the cooling system.

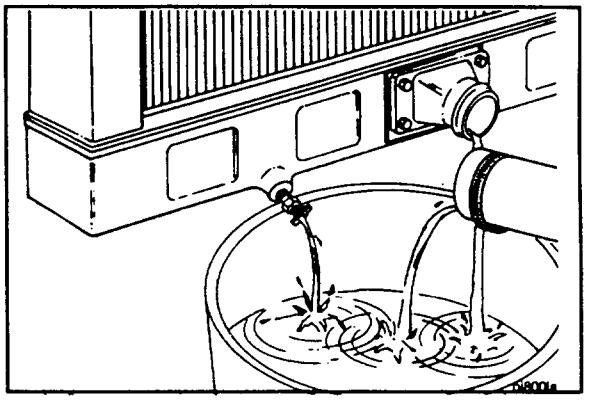

2. Open the draincock on the oil cooler housing and on the water pump. Close the draincock after the coolant is removed.

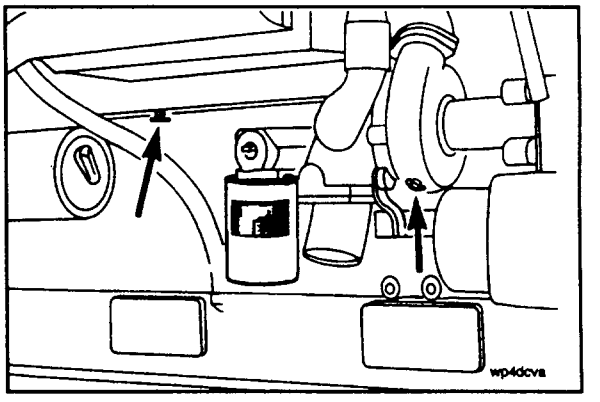


3. Remove the oil drain hoses from the turbocharger(s).

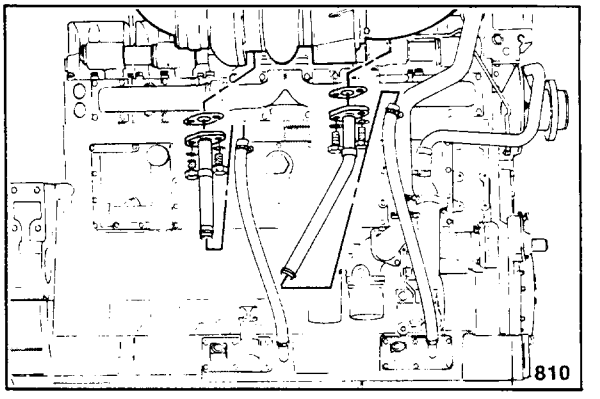

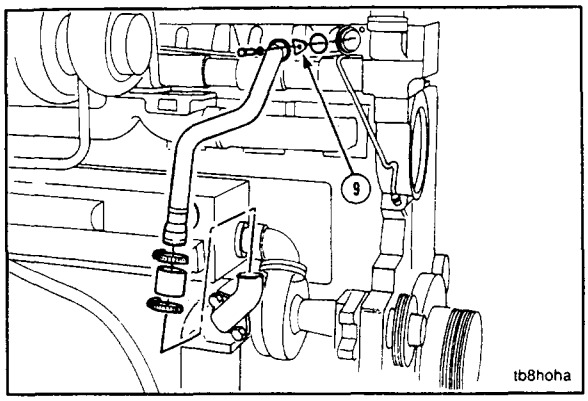


4. Remove the water by-pass tube clamp (9). Loosen both hose clamps. Remove the water by-pass tube.

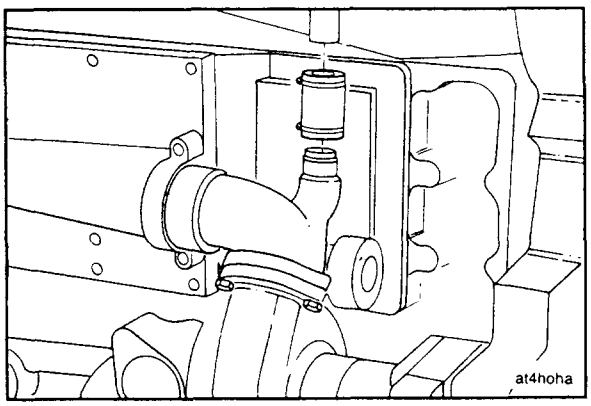


5. Disconnect the aftercooler supply hose from the water pump outlet connection.

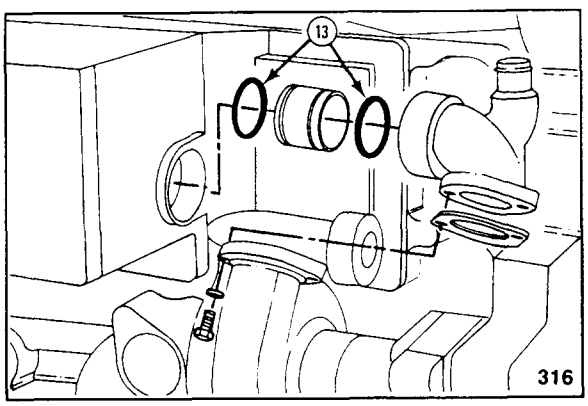


6. Remove the water pump outlet connection assembly.
7. Remove the water transfer tube from the water connection. Remove and discard the two o-rings (13) and the gasket.

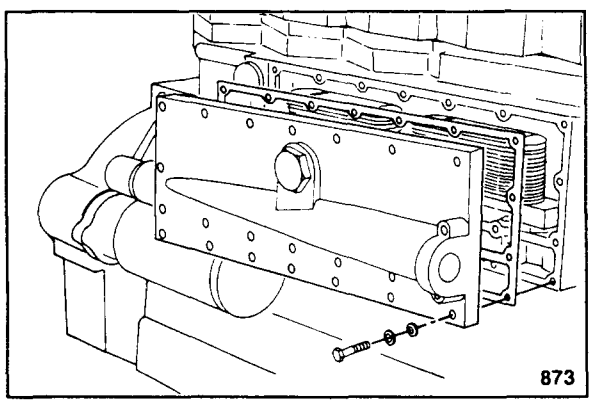


8. Remove all of the capscrews, the oil cooler cover and gasket.

## Check For Reuse

1. Clean and check the cover for reuse. Check aluminum covers for corrosion.

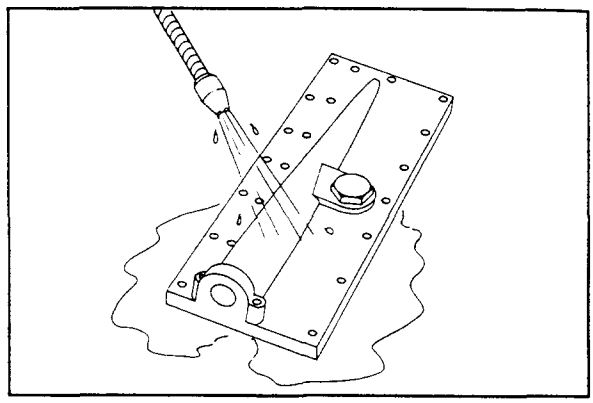

## Install

1. Install the oil cooler cover and gasket. Use several capscrews to hold the cover in place, but do not tighten them.

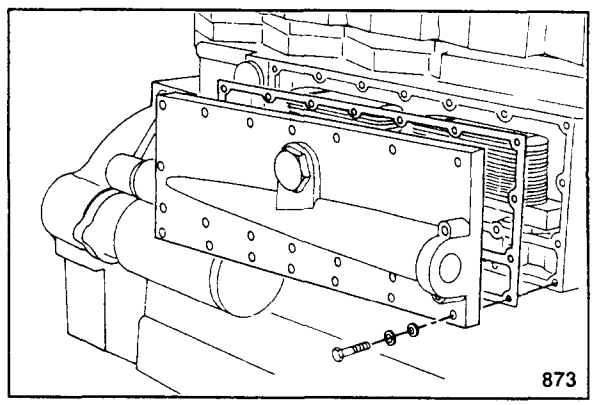


2. Install the capscrews as shown. Tighten the capscrews to the values specified and in the sequence shown in the next illustration.

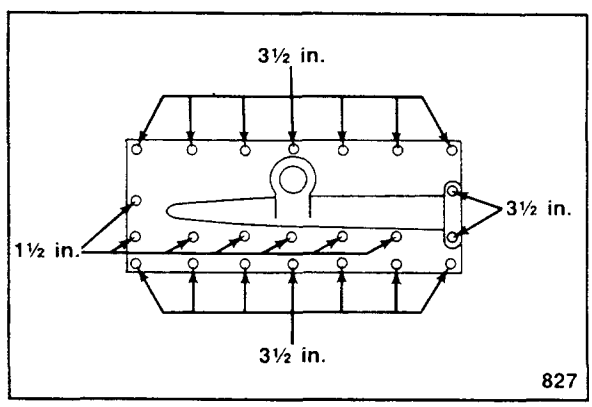


**Caution: The capscrews have different torque values. The torque values depend on the housing material (aluminum or cast iron).**

| Oil Cooler Capscrew Torque Values | | |
|---|---|---|
| Torque Sequence | Aluminum Housing N•m [ft-lb] | Cast Iron Housing N•m [ft-lb] |
| 1 through 9 | 40 [30] | 45 [35] |
| 10 through 39 | 45 [35] | 45 [35] |

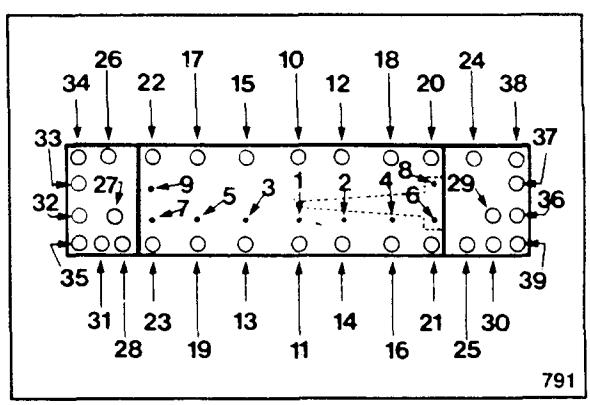

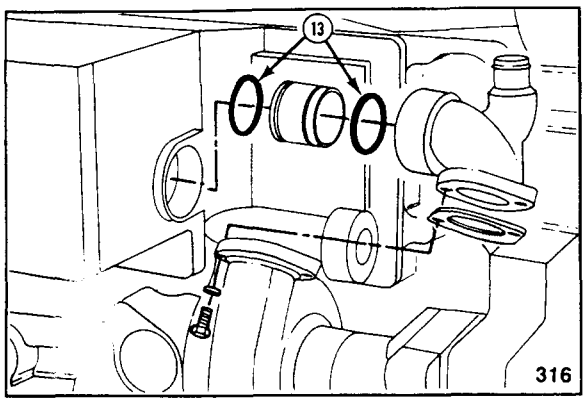

3. Use vegetable oil and lubricate the o-rings (13).
4. Install the transfer tube in the water pump outlet connection.
5. Install the water pump outlet connection, gasket and capscrews. Tighten the capscrews to 45 N•m [35 ft-lb].

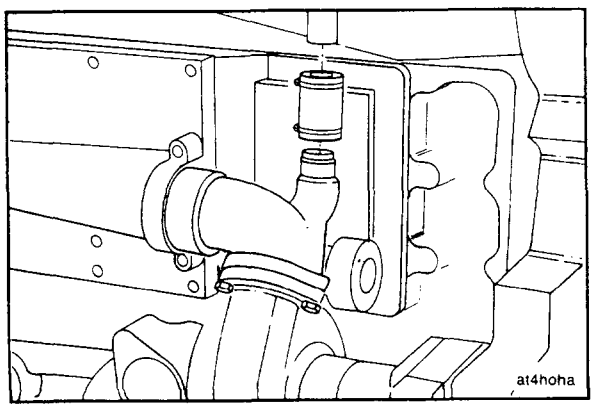

6. Connect the aftercooler supply hose to the water pump outlet connection. Tighten the clamps to 5.6 N•m [50 in-lb].

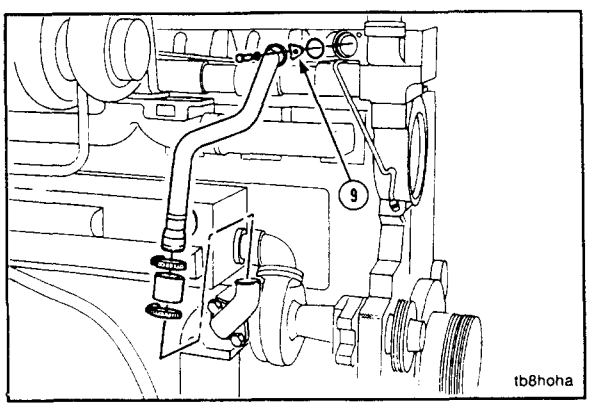

7. Use vegetable oil and lubricate the o-ring on the by-pass tube. Install the by-pass tube.

**Note:** The raised lip on the retainer (9) must point away from the thermostat housing.

8. Install the retainer (9) and capscrew.
9. Tighten the capscrew to 45 N•m [35 ft-lb]. Tighten the hose clamps to 5.6 N•m [50 in-lb].

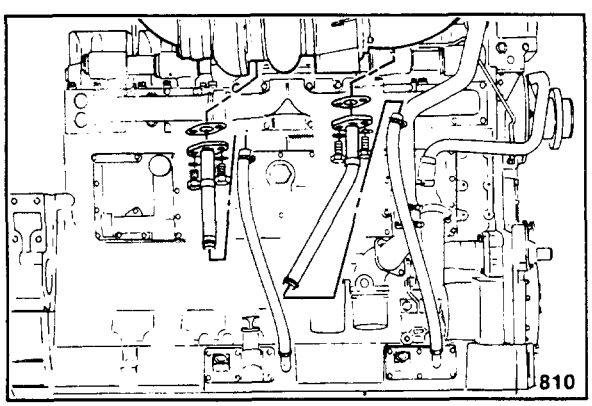

10. Install the oil drain hose(s) on the turbocharger(s). Tighten the hose clamps to 5.6 N•m [50 in-lb].

11. Fill the cooling system. Refer to Procedure 01-07.
12. Operate the engine to normal operating temperature and check for leaks.

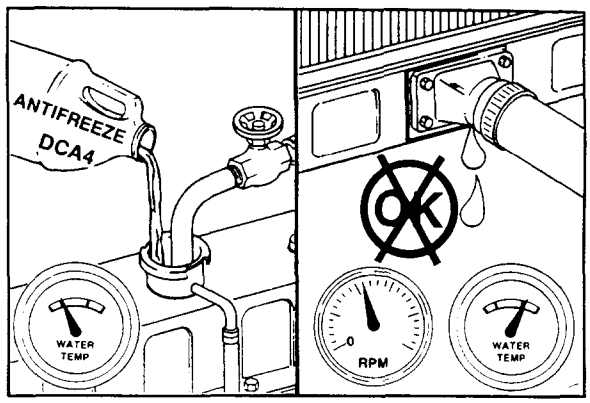


# Torque Converter Cooler - Replace (02-21)

## Remove

1. Open the draincock on the bottom of the radiator and remove the lower radiator hose to drain the cooling system.

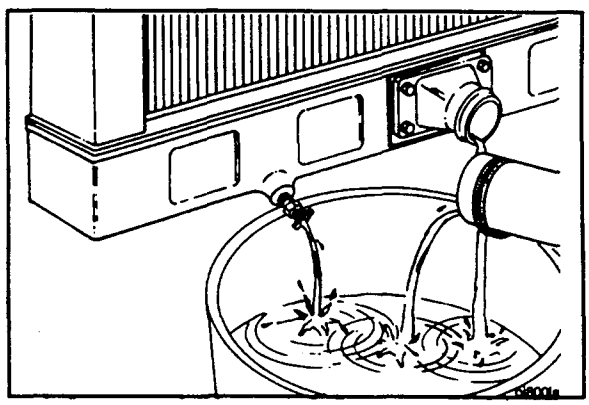

2. Open the draincock on the oil cooler housing.
3. Close the draincock after all of the coolant is removed.

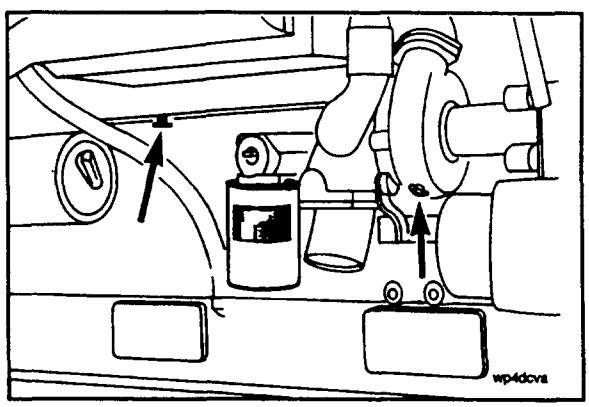


4. Remove the turbocharger oil drain hose(s) and connections.

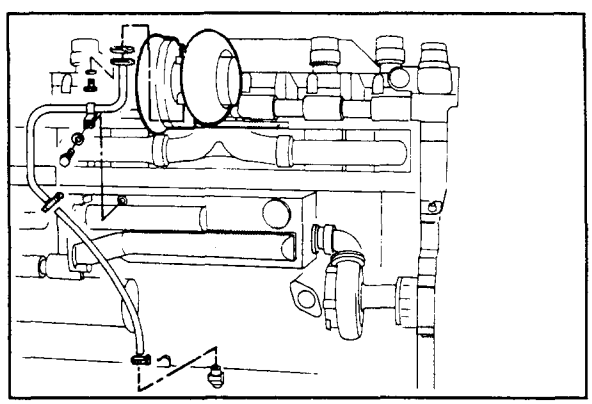

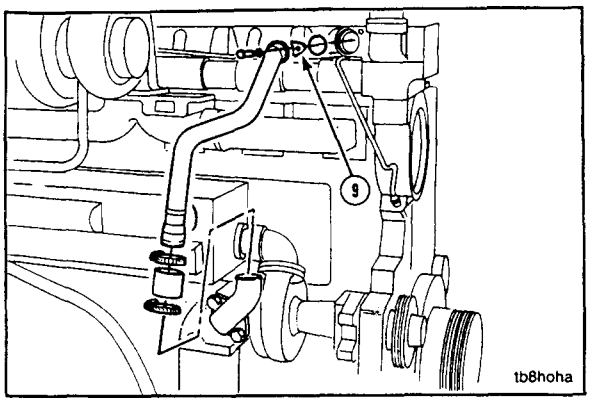


5. Remove the water by-pass tube clamp (9). Loosen both hose clamps. Remove the by-pass tube and discard the o-ring.

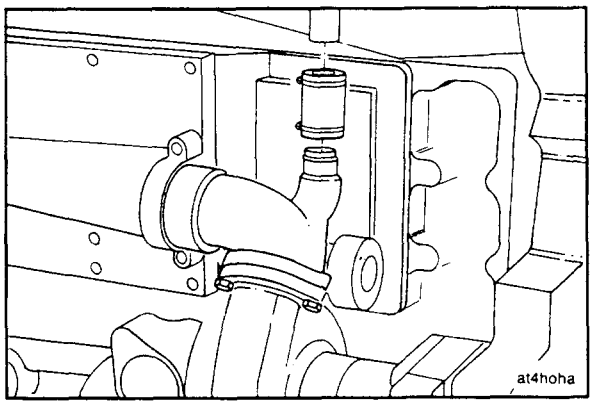


6. Disconnect the aftercooler supply hose from the water pump outlet connection.

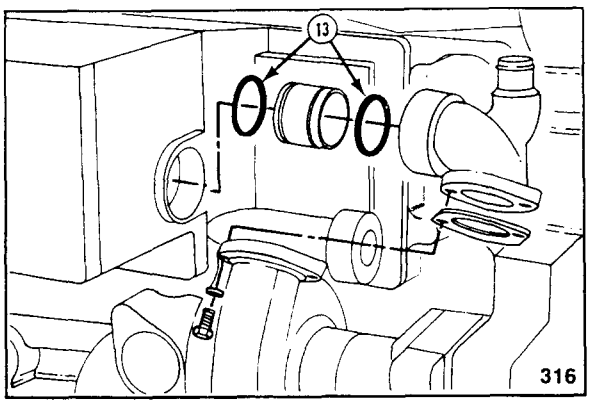


7. Remove the water pump outlet connection assembly.
8. Remove the water transfer tube from the water outlet connection. Remove and discard the two o-rings (13) and the gasket.

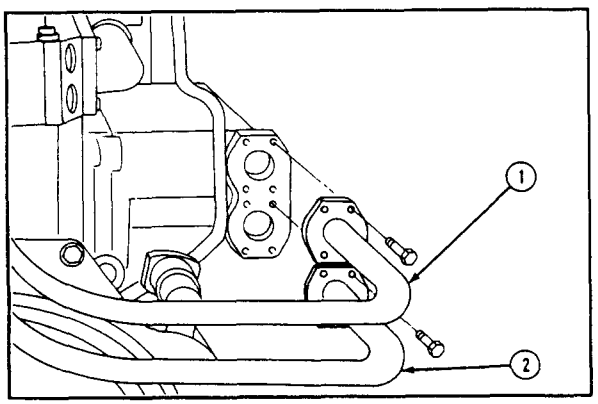


9. Remove the oil supply (1) and oil return (2) hoses from the torque converter cooler.

Remove the torque converter cooler cover mounting capscrews. The cover must be pried off because of the tight fit between the cover and the o-rings on the elements.

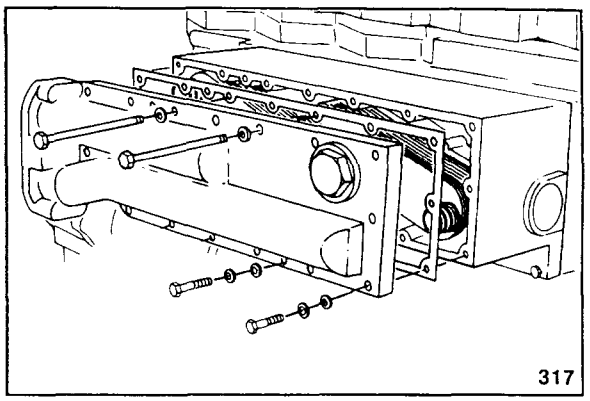


**Caution: This assembly weighs more than 23 kg [50 lb]. Handle securely to avoid dropping.**

10. Use two [3/8-16x12-inch] guide studs to support the housing while the capscrews are being removed.
11. Remove the remaining capscrews, the torque converter cooler housing and the gasket.

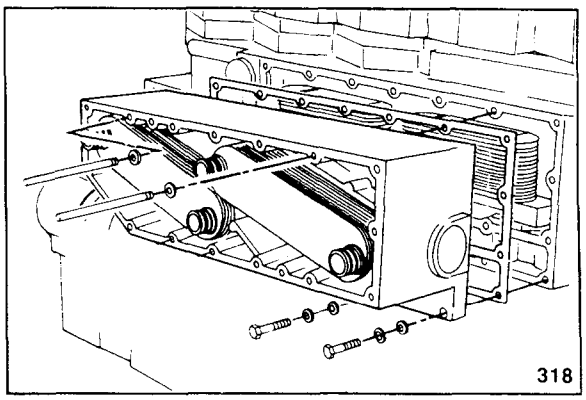


## Check For Reuse

1. Clean and check the housing, cover and elements for reuse. Refer to Procedure 02-24.

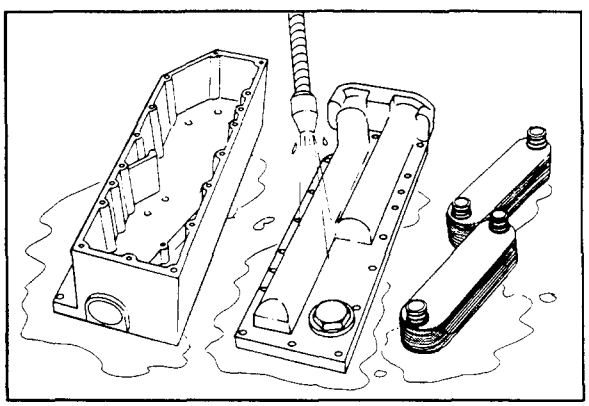

## Install

**Caution: This assembly weighs more than 23 kg [50 lb]. Personal injury can result.**

1. Use two [3/8-16x12-inch] guide studs to support the housing during installation.
2. Install the gasket and housing.
3. Install the capscrews in the bottom row of holes on the housing. These capscrews are all 4 inches long.

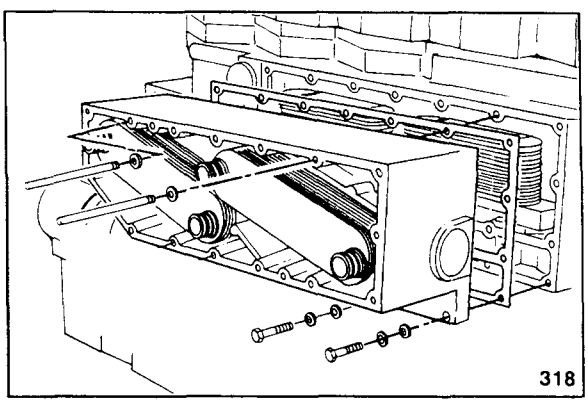

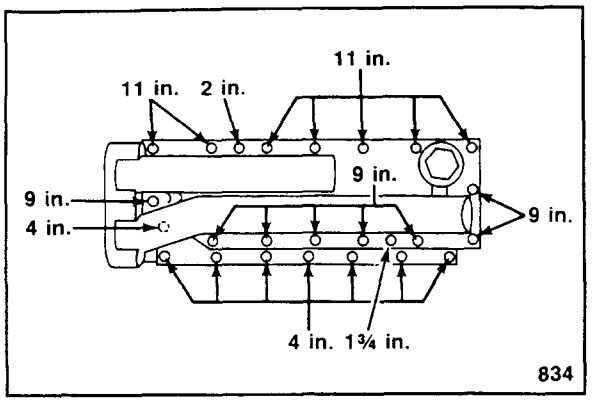


**Note:** The length and location of all the capscrews on the torque converter cooler and cover are shown. Be sure the capscrews are the correct length.

4. Do not tighten any of the capscrews until all of them have been installed.

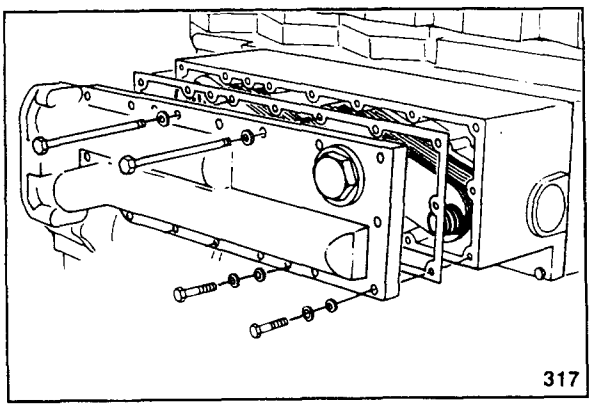

5. Use vegetable oil to lubricate the o-rings on the cooler elements and the bores in the cover.
6. Install the gasket and cover. Push the cover over the o-rings until against the housing.
7. Install the remaining capscrews.

**Note:** Be sure the capscrews are the correct length.

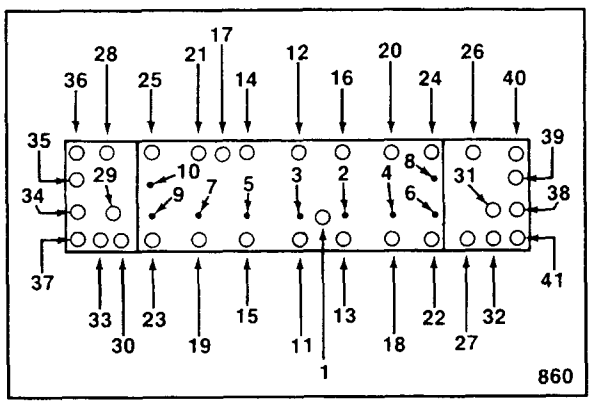

**Note:** The capscrews have different torque values. The torque values depend on the material of the oil cooler housing.

8. Tighten the capscrews in the sequence shown and to the values listed in the table below.

T.C. Cooler Capscrew Torque

| Torque Sequence | Aluminum Housing N•m [ft-lb] | Cast Iron Housing N•m [ft-lb] |
|---|---|---|
| 1 through 10, and 17 | 40 [30] | 45 [35] |
| 11 through 16, 18 through 41 | 45 [35] | 45 [35] |

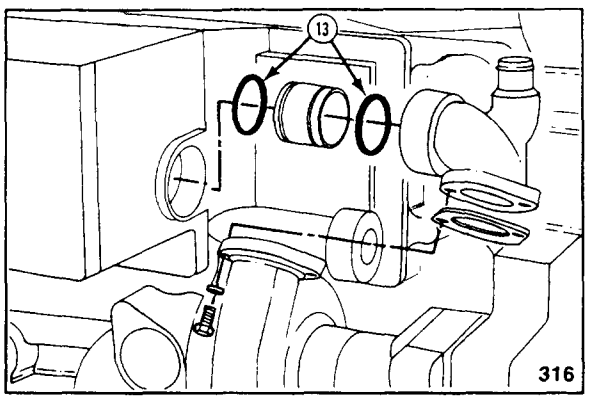

9. Use vegetable oil and lubricate the o-rings (13).
10. Install the transfer tube in the water pump outlet connection.
11. Install the water pump outlet connection, gasket and capscrews. Tighten the capscrews to 45 N•m [35 ft-lb].

12. Connect the aftercooler supply hose to the water pump outlet connection. Tighten the clamps to 5.6 N•m [50 in-lb].

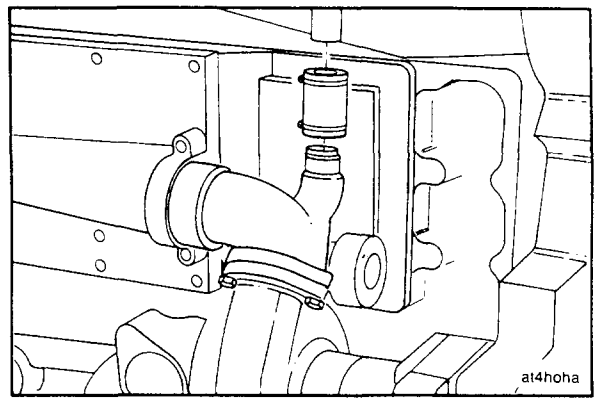


13. Use vegetable oil and lubricate the o-ring on the water by-pass tube. Install the by-pass tube.

**Note:** The raised lip on the retainer (9) must point away from the thermostat housing.

14. Install the retainer (9) and capscrew.
15. Tighten the capscrew to 45 N•m [35 ft-lb]. Tighten the hose clamps to 5.6 N•m [50 in-lb].

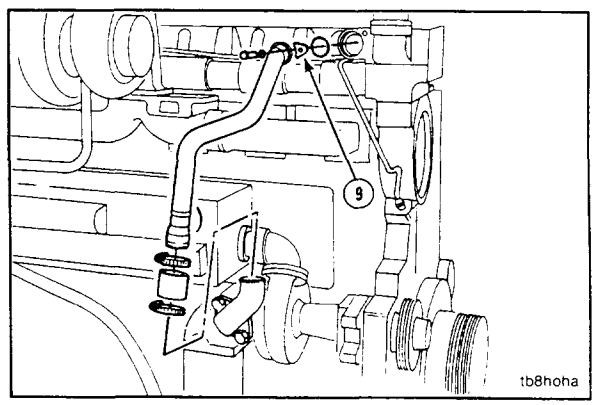


16. Connect the torque converter oil hoses to the torque converter cooler.

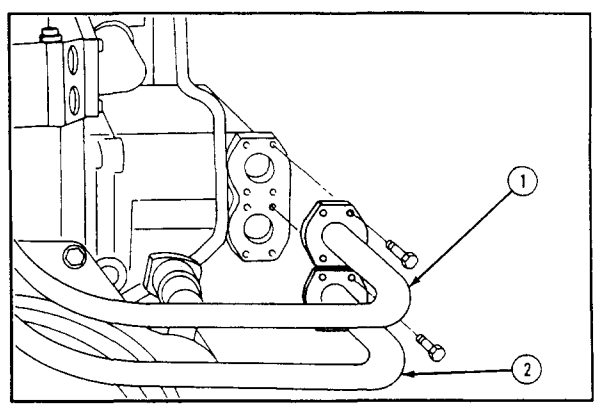


**Caution: These parts are a safety-related item. Be sure the parts are clamped correctly to prevent fretting.**

17. Install the turbocharger oil drain tube. Tighten the capscrews to 45 N•m [35 ft-lb]. Tighten the hose clamps to 5.6 N•m [50 in-lb].

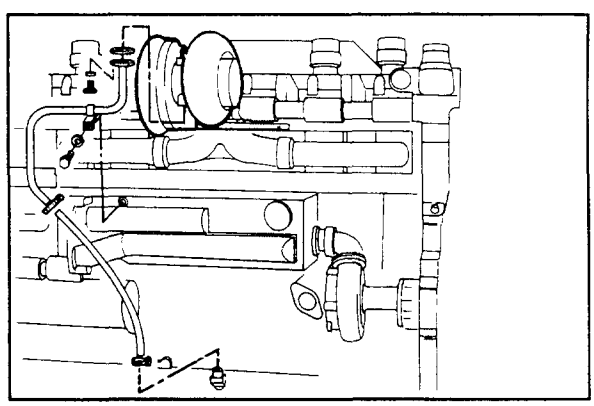

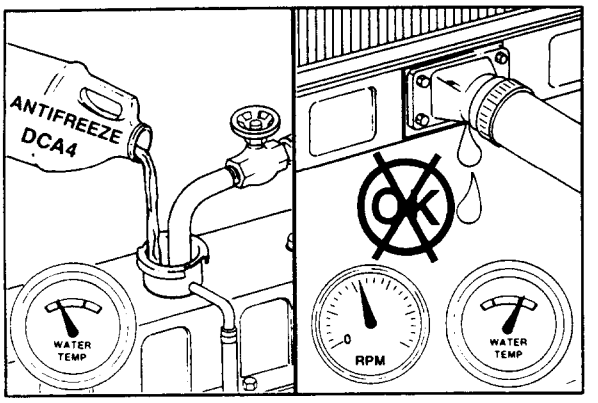


18. Fill the cooling system. Refer to Procedure 01-07.
19. Operate the engine to normal operating temperature and check for leaks.

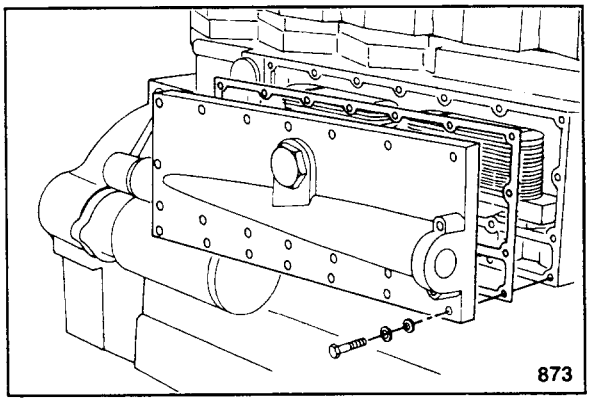


## Oil Cooler Core - Replace (02-22)

### Remove

1. Remove the oil cooler cover. Refer to Procedure 02-20.

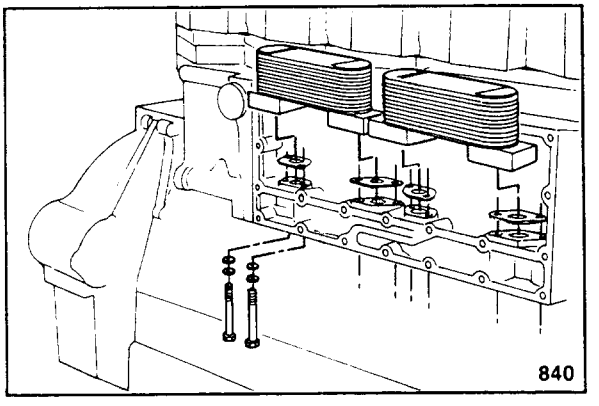


**Note:** There is little clearance between the capscrews and the block on some engines. If necessary, use a drift and a mallet to tap the loosened capscrews from the oil cooler housing.

2. Remove the eight capscrews and the two oil cooler cores. Remove and discard the gaskets.

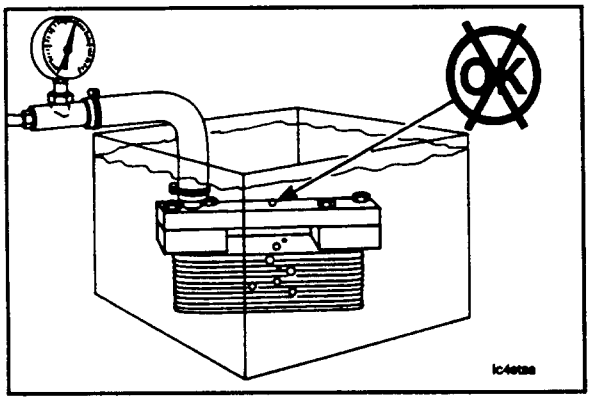

### Check For Reuse

**Note:** Discard the cores if the engine has had a failure or if debris is found in the lubricating system.

1. Use a solvent that will not harm the copper core. Clean the elements.
2. Pressure test the cores for leaks as shown.

   Air Pressure: 414 kPa 60 psi

**Note:** Heating the tank water to 50°C [120°F] will improve the test results.

## Install

**Note:** Remove the plastic shipping plugs from new oil cooler cores.

1. Install the gaskets, oil cooler cores, and capscrews. Tighten the capscrews to 45 N•m [35 ft-lb].

**Note:** The cores must not touch the cylinder block. Grind off enough block material to allow clearance if necessary. Do not allow grinding to contaminate the block.

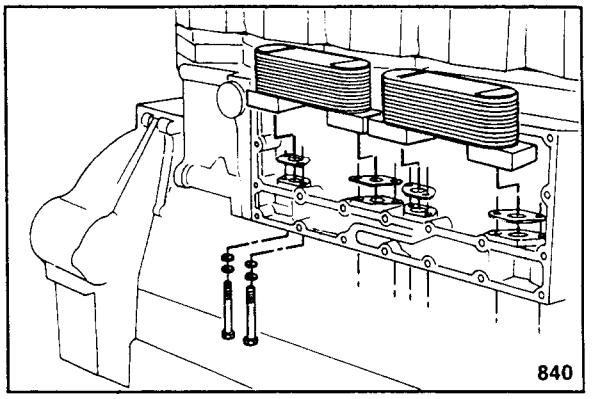


2. Replace the oil cooler cover. Refer to Procedure 02-20.

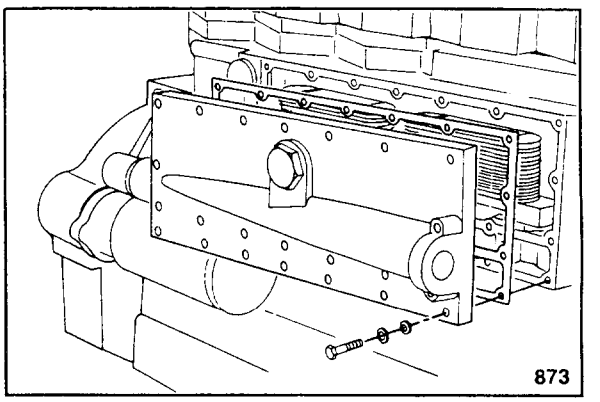


## Oil Cooler Core - Check For Reuse (02-23)

1. Discard the cores if debris from a failure is found in the oil filters.
2. Use a solvent that will not harm copper. Clean the cores.

   Pressure test the cores to check for leaks. Use 415 kPa [60 psi] air pressure.

**Note:** Heating the tank water to 50°C [120°F] will improve the test results.

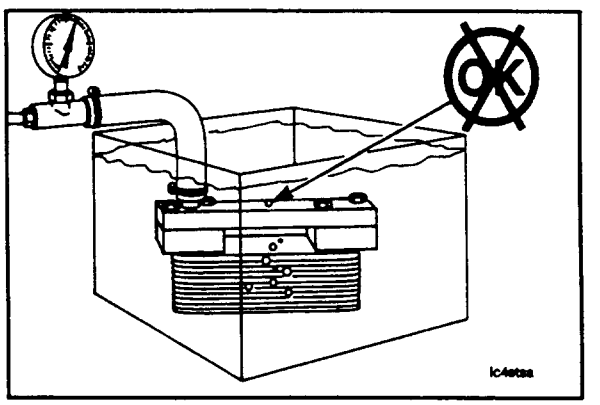


## Torque Converter Cooler - Pressure Test (02-24)

1. Remove the parts as shown. Discard the o-rings. Clean and check the parts for reuse.

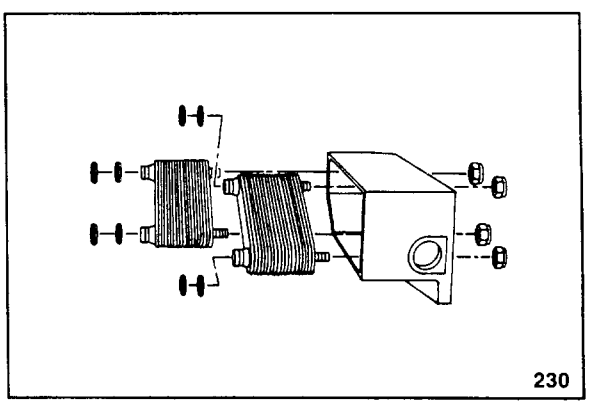

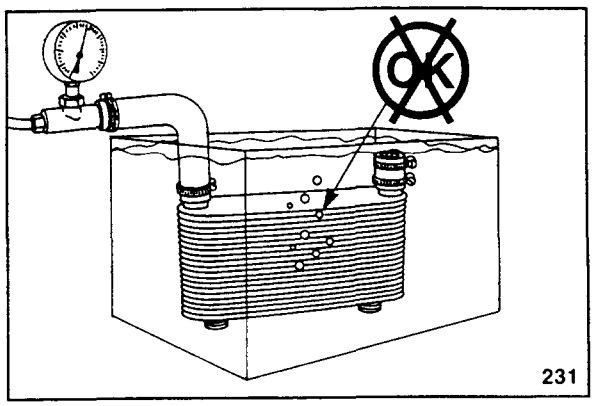


2. Pressure test the elements to check for leaks. Use 415 kPa [60 psi] air pressure.

**Note:** Heating the tank water to 50°C [120°F] will improve the test results.

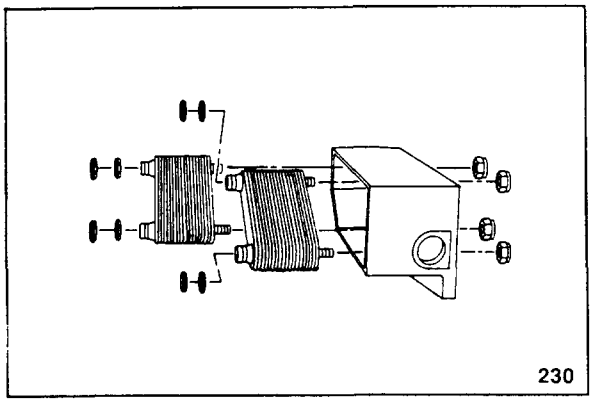


3. Install the elements and torque to the self-locking nuts to 130 N•m [95 ft-lb].

   Use new o-rings. Lubricate the o-rings with vegetable oil and install them on the cooler elements.

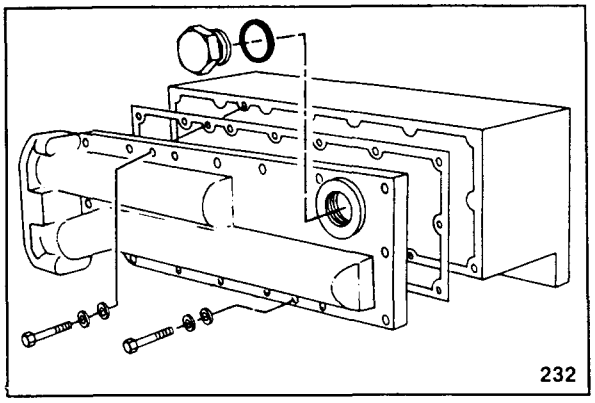


4. Install the cover. Tighten the two capscrews to 50 N•m [35 ft-lb].

**Note:** The remaining capscrews attach the cover to the block. These capscrews cannot be installed until the cooler is mounted on the engine.

5. Using Loctite 592, or equivalent, apply a smooth coating of sealant to the threads of the heater plug. Tighten the plug to 75 N•m [55 ft-lb].

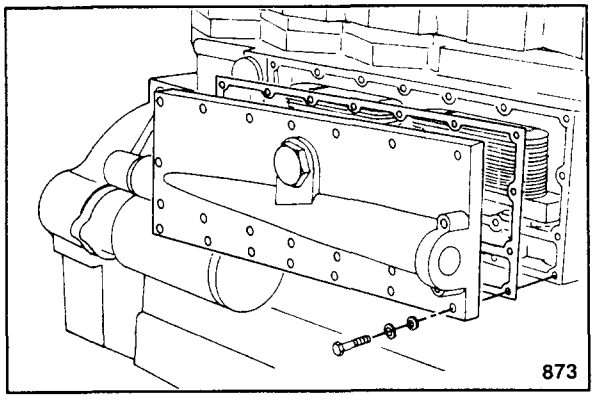


## Oil Cooler Housing - Replace (02-25)

### Remove

1. Remove the oil cooler cover or the torque converter. Refer to Procedure 02-20 or 02-21.

2. Remove the water pump. Refer to Procedure 01-30.

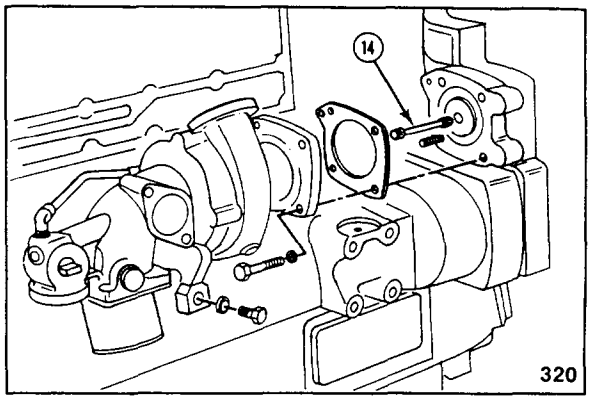


**Note:** If the starting motor is located on the right side of the engine it must be removed.

3. Remove the starting motor capscrews, the starter, spacer and gaskets. Discard the gaskets.

**Note:** All engines do not contain spacers and gaskets.

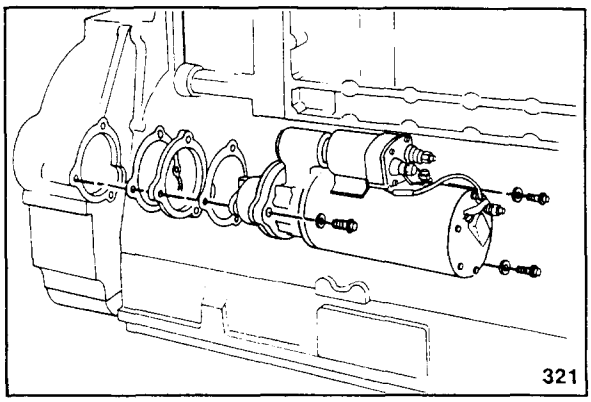


**Note:** On some engines the lubricating oil filter head is installed on the oil cooler housing. Remove the six capscrews and the oil filter head.

4. Remove the capscrews and oil cooler housing. Remove and discard the gaskets.

**Note:** Some engines contain two oil transfer tubes and o-rings. These parts can be discarded if the current gasket will be used during rebuild.

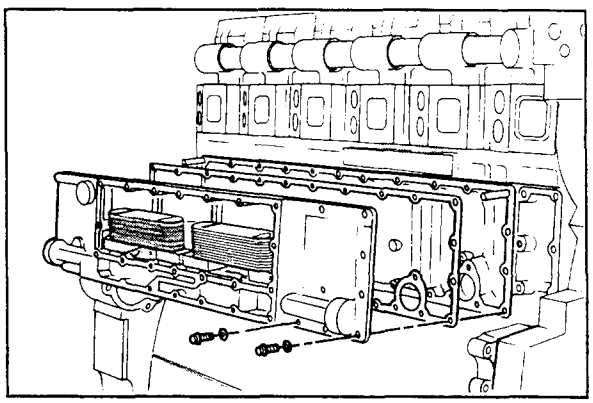

## Check For Reuse

1. Clean and check the housing. Check aluminum housings for corrosion.

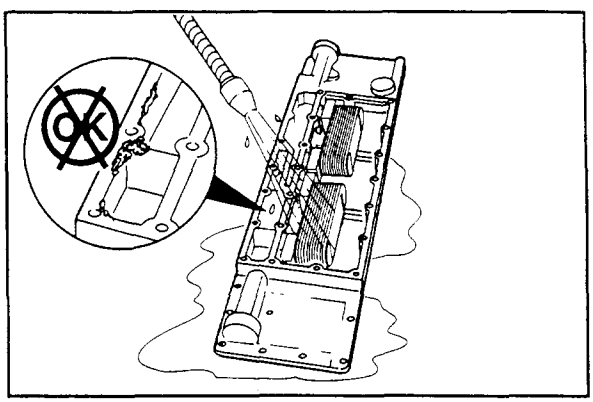

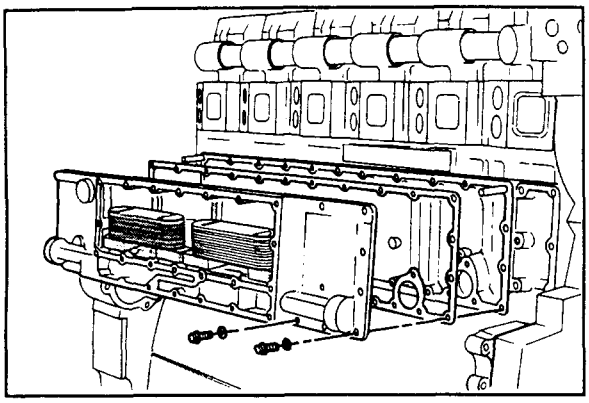

## Install

**Note:** Do not use transfer tubes with o-rings between the oil cooler housing and the block when using the style of gasket shown.

1. Install two guide studs. Put the gasket and housing into position.

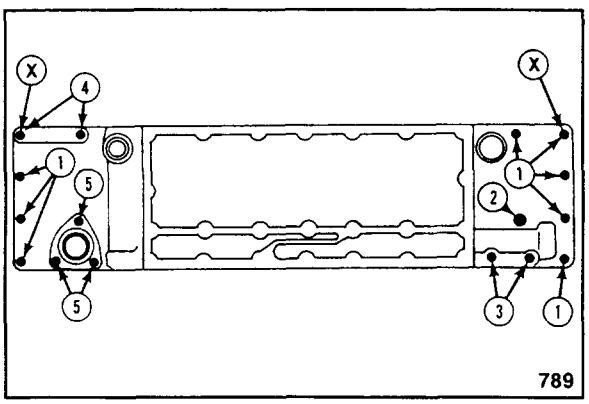


**Caution: Do not tighten the capscrews until the oil cooler cover or torque converter cooler cover is installed.**

2. Install the capscrews as shown.

**Caution: The two capscrew holes marked "X" align with the cylinder capscrews. The cylinder head capscrews will be damaged if the cooler housing capscrews are too long.**

| Oil Cooler Housing Capscrews Length | | |
|---|---|---|
| With Oil Filter | (inches) | Without Oil Filter |
| (1) 1 1/4 | | 1 1/4 |
| (2) 1 3/4 | | 1 3/4 |
| (3) 2 | | 2 |
| (4) 2 1/2 | | 1 3/4 |
| (5) 2 1/2 | | 2 |

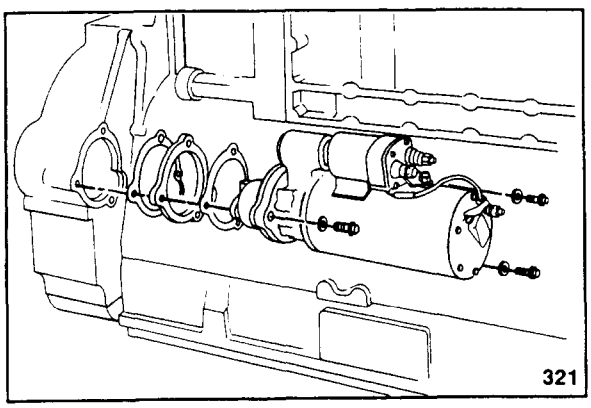


**Note:** Starting motor spacers are not on all engines.

**Note:** The wet type flywheel housing requires gaskets for starting motor installation.

3. Install any spacer or gaskets. Install the starting motor and capscrews.

| Starting Motor Torque Values | | |
|---|---|---|
| Flywheel Housing | N•m | ft-lb |
| Cast Iron: | 215 | 160 |
| Aluminum: | 195 | 145 |

4. Install the water pump. Refer to Procedure 01-30.

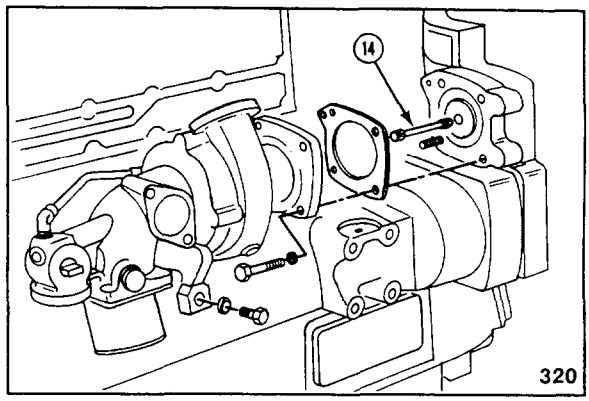


5. Install the oil cooler cover or the torque converter cooler. Refer to Procedure 02-20 or 02-21.

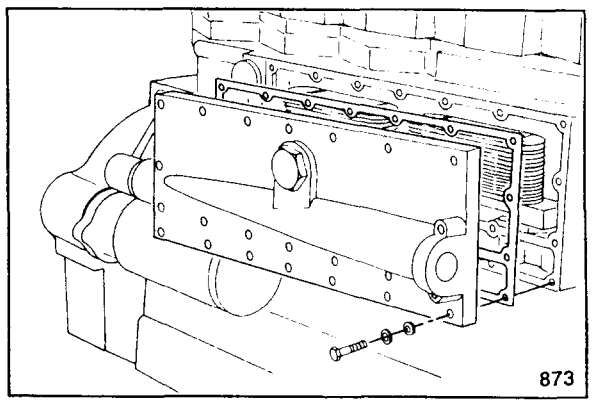


## Main Oil Pressure Regulator - Replace (02-26)

**Note:** The oil pump does not need to be removed on engines manufactured prior to engine serial number 31117702. These engines use a retaining ring to secure the pressure regulator assembly. Use tool, Part No. 3375055, to remove the pressure regulator. Proceed to "Check for Reuse".

### Remove

1. Remove the oil pump assembly. Refer to Procedure 02-27.

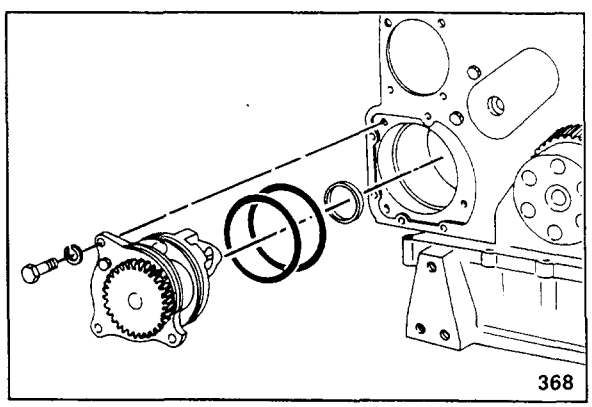


**Caution: To prevent personal injury, it is imperative to follow the instructions given below:**

2. Use an arbor press and mandrel (1) to hold the retainer (4) in place while the dowel pin is being removed. Use a brass drift (2) and remove the dowel pin (3).

**Note:** Some models use a short dowel and a roll pin to hold the retainer.

3. Slowly raise the arbor press to relieve the spring tension. Remove the retainer, spring and regulator plunger (5).

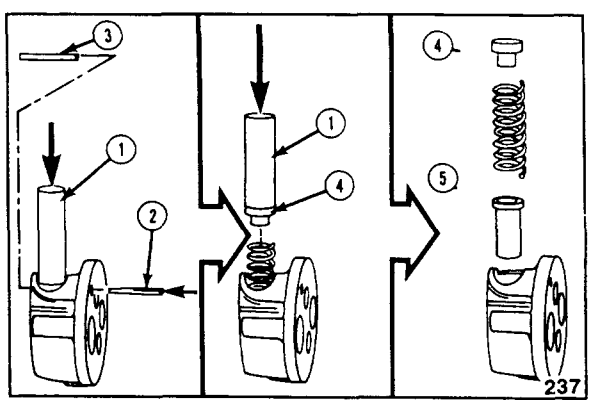

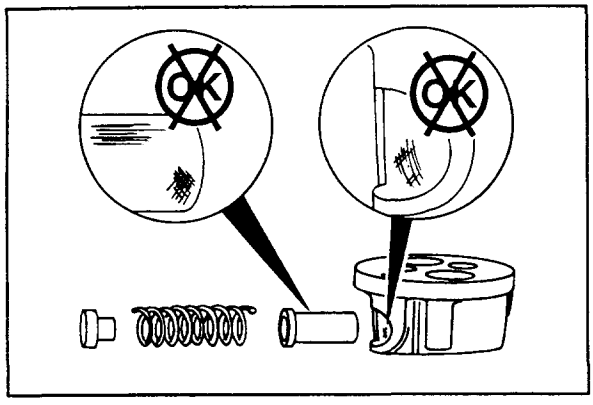

## Check For Reuse

1. Clean and check the parts for reuse. Place the plunger in the bore and move it to check for free movement. If the bore is damaged the pump must be rebuilt or replaced. Refer to the K19 Shop Manual. If the plunger is damaged it must be replaced.

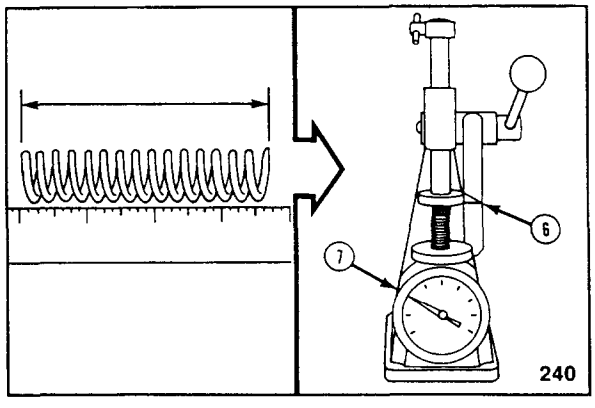


2. Check the free length of the spring. It should be approximately 95 mm [3.75 in].
3. Use a valve spring tester, part No. 3375182, or equivalent. Measure the spring force (7) at the working height (6).

| | | | |
|---|---|---|---|
| (6) Working Height: | 63.88 mm | [2.515 in] | |
| (7) Spring Force: | 300 N | MIN | [68 lb] |
| | 310 N | MAX | [70 lb] |

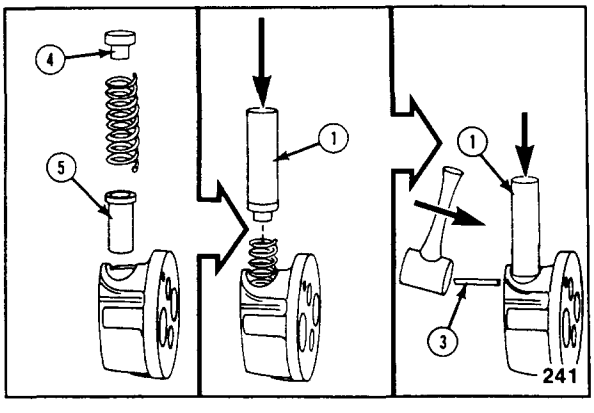


## Install

**Note:** Some models use a short dowel and a roll pin. Install the short dowel even with the gasket surface before installing the remaining parts.

1. Lubricate the regulator plunger and bore with engine oil.
2. Install the plunger (5), spring and retainer (4).
3. Use a mandrel (1) and arbor press to compress the spring. Use a mallet and install the roll pin even with the casting.

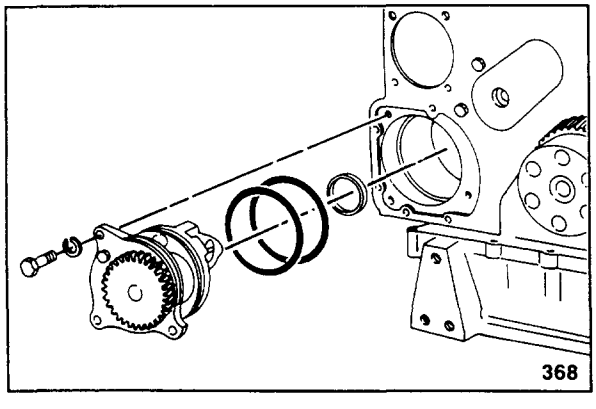


4. Replace the oil pump and related parts. Refer to Procedure 02-27.

# Oil Pump - Replace (02-27)

## Remove

1. Drain the lubricating oil. Refer to Procedure 02-09.

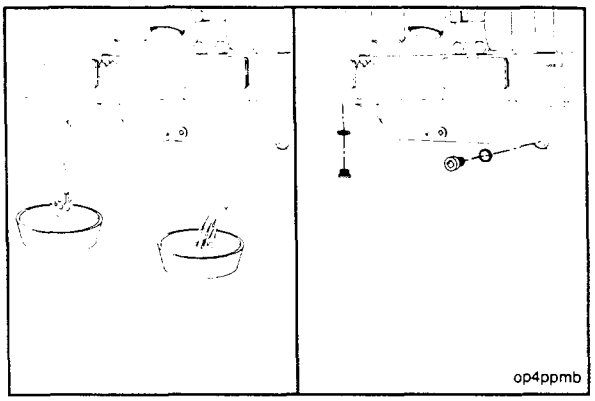


2. Remove the oil pan sump or the oil pan adapter cover located at the front of the engine. Remove and discard the gasket.

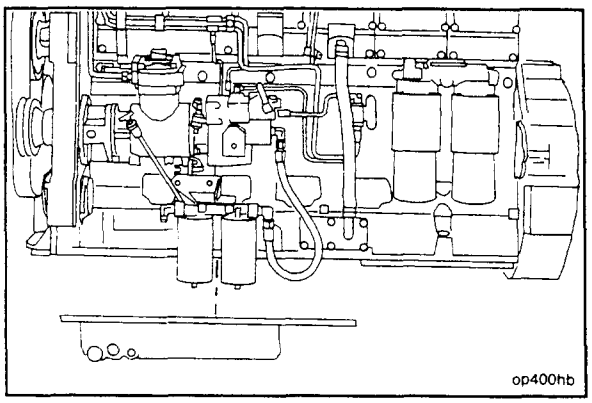


3. Remove the front gear cover. Refer to Procedure 07-39 or 07-42.

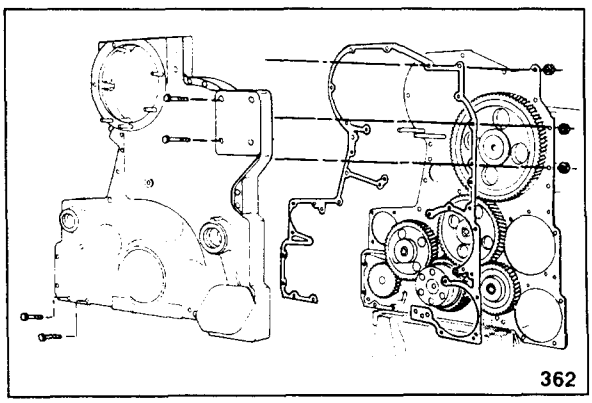


4. Remove the three capscrews from the oil pump mounting flange. Use a pry bar and gently pry the oil pump out of the engine block.
5. Remove and discard the two o-rings and the seal ring from the pump.

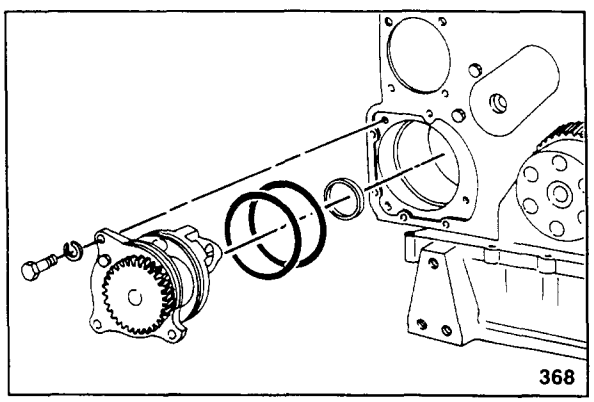

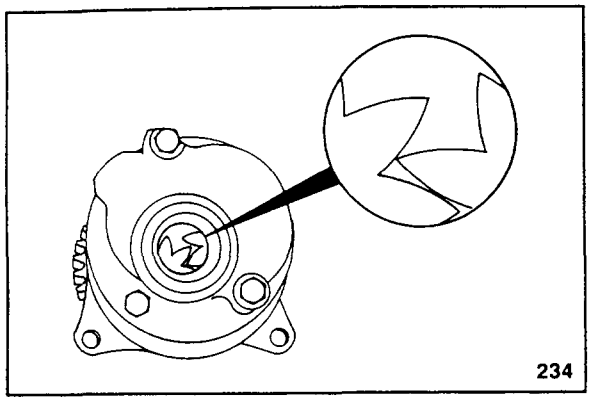


## Check For Reuse

1. Clean and check the oil pump for reuse. Rotate the drive gear slowly and check the pump gears for damage.

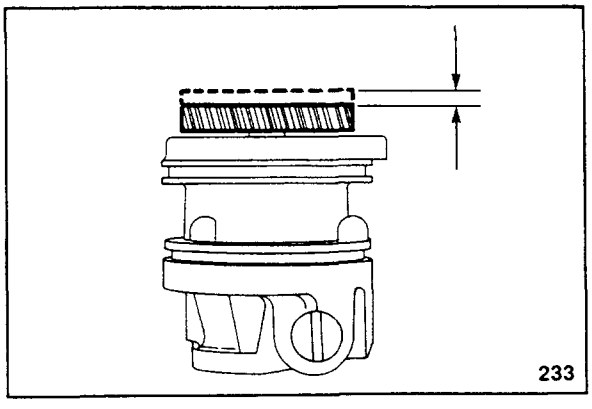


2. Measure the oil pump gear end clearance.

| Oil Pump End Clearance | | |
|---|---|---|
| mm | | in |
| 0.064 | MIN | 0.0025 |
| 0.165 | MAX | 0.0065 |

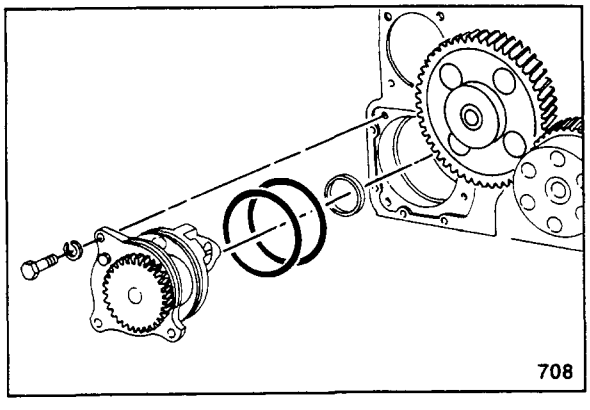


## Install

**Note:** Apply a light coat of grease to the seal ring to hold it in place during assembly.

1. Install the o-rings and the seal ring on the pump.
2. Use vegetable oil to lubricate the o-rings and the bore in the block.
3. Install the pump and the capscrews. Tighten the capscrews to 45 N•m [35 ft-lb].

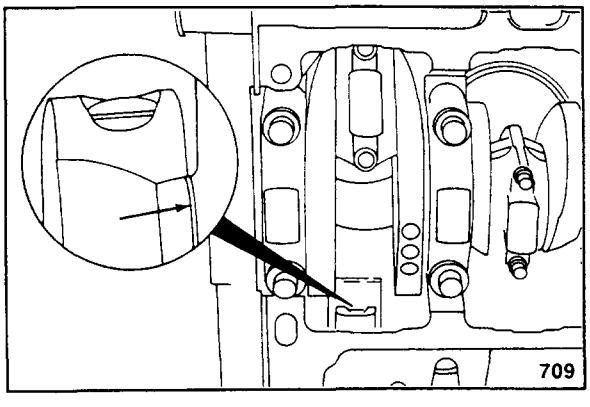


4. Be sure the seal ring at the back of the pump is positioned correctly.

   Look up into the block between the No. 1 and No. 2 main bearing caps. The seal must be visible in the space between the rear of the pump and the block.

5. Check the oil pump gear backlash. Refer to Procedure 07-44. Adjust the backlash if necessary by loosening the mounting capscrews and rotating the pump.

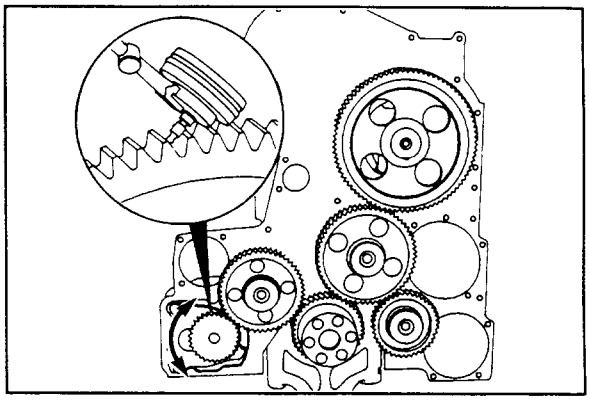

6. Install the gasket, and the oil pan or oil pan adapter cover. Refer to Procedure 02-16.

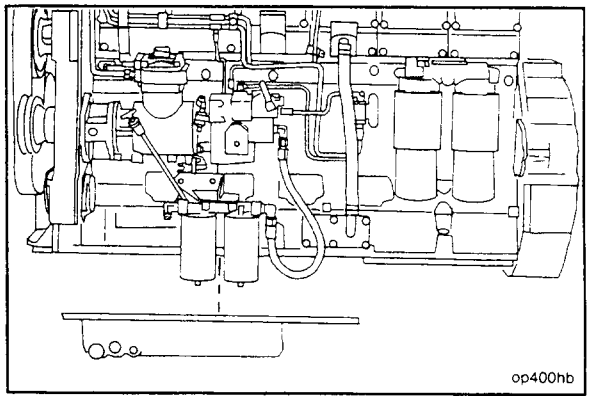


7. Install the front gear cover and remaining components. Refer to Procedure 07-39 or 07-42.

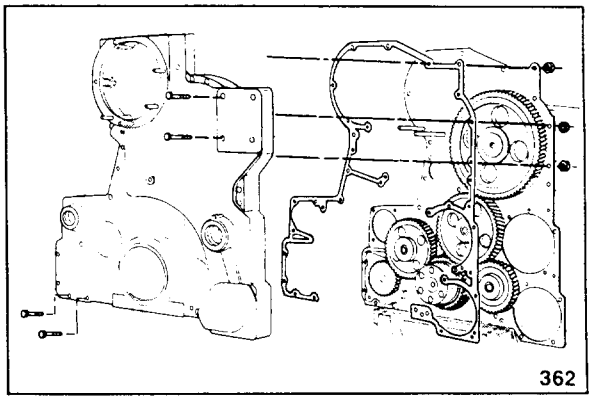


## Lubricating Oil Pump - Check For Reuse (02-28)

1. Rotate the assembly. Check the part for damage. Measure the pump end clearance.

| End Clearance | | |
|---|---|---|
| mm | | in |
| 0.064 | MIN | 0.0025 |
| 0.165 | MAX | 0.0065 |

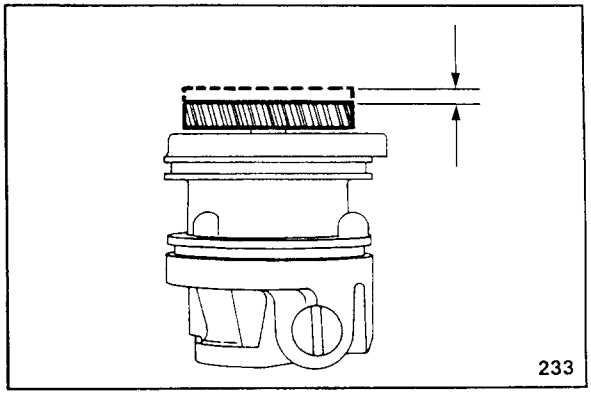

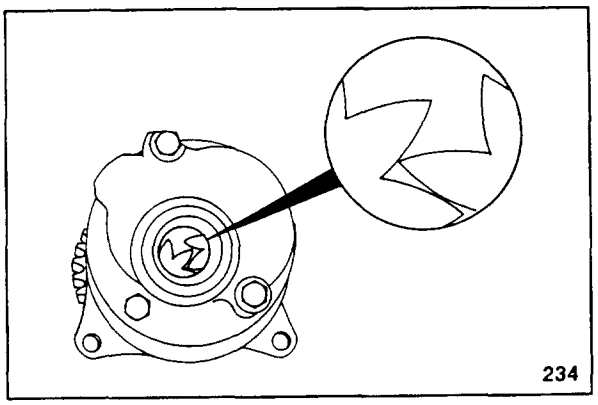


2. Using solvent, flush the lubricating oil pump.
3. Check the gears of the oil pump for damage.

# Section 03 - Combustion Air System

## Section Contents


| | Reference No. | Page No. |
|---|---|---|
| General Information | 3-01 | 3-2 |
| Specifications | 3-02 | 3-3 |
| Flow Diagrams | 3-03 | 3-4 |
| Service Tools | 3-04 | 3-6 |


## System Troubleshooting and Repair List


| | Procedure No. | Page No. |
|---|---|---|
| Turbocharger Turbine Seal Leaks - Check | 03-05 | 3-7 |
| Turbocharger Compressor Seal Leakage | 03-06 | 3-9 |
| Correct Turbocharger Installed - Check | 03-07 | 3-11 |
| Intake Air Restriction - Check | 03-08 | 3-11 |
| Exhaust Air Restriction - Check | 03-09 | 3-13 |
| Air Leaks - Check | 03-10 | 3-14 |
| Turbocharger - Check blades for damage | 03-11 | 3-16 |
| Turbocharger - Check axial/radial clearance | 03-12 | 3-17 |
| Turbocharger - Replace | 03-13 | 3-18 |
| Turbocharger (series) - Replace | 03-14 | 3-24 |
| Exhaust Manifold - Replace | 03-15 | 3-32 |
| Exhaust Manifold - Check | 03-16 | 3-37 |
| Aftercooler - Replace | 03-17 | 3-38 |
| Aftercooler Element - Replace | 03-18 | 3-44 |
| Aftercooler - Pressure Test | 03-19 | 3-48 |
| Intake Manifold Pressure - Check | 03-20 | 3-49 |

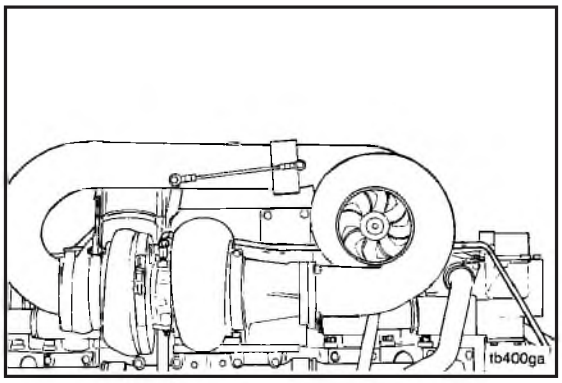


## General Information - (03-01)

The combustion air system consists of intake air piping, turbocharger, and exhaust air piping.

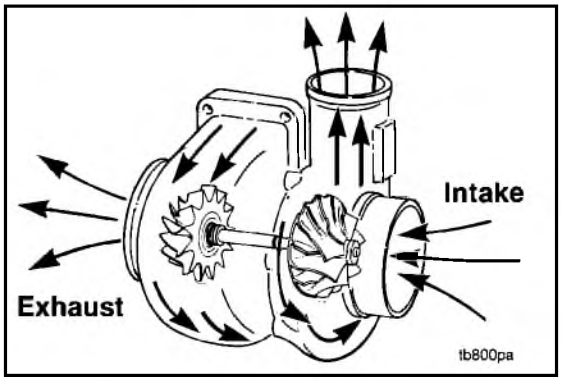


The turbocharger uses exhaust gas energy to turn the turbine wheel. This turbine wheel drives a compressor impeller which provides pressurized air to the engine for combustion.

On KTTA engines, the low stage turbocharger provides pressurized air to the high stage turbocharger. The high stage turbocharger provides pressurized air to the engine for combustion.

# Combustion Air System Specifications (03-02)

## Air Induction System

Maximum intake restriction (clean air filter element).....380 mm $H_20$ [15.0 in. $H_20$]

Maximum intake restriction (dirty air filter element) .....635 mm $H_20$ [25.0 in. $H_20$]

## Exhaust System

Maximum back pressure .....75 mm Hg [3.0 in. Hg]

Normal exhaust pipe diameter KTTA .....152 mm [6 inch]

KTA .....127 mm [5 inch]

KT .....127 mm [5 inch]

# Flow Diagrams (03-03)

## Intake System

1. Intake Air Inlet to Turbocharger
2. Turbocharger Air to Aftercooler
3. Aftercooler
4. Intake Manifold
5. Intake Valve Ports

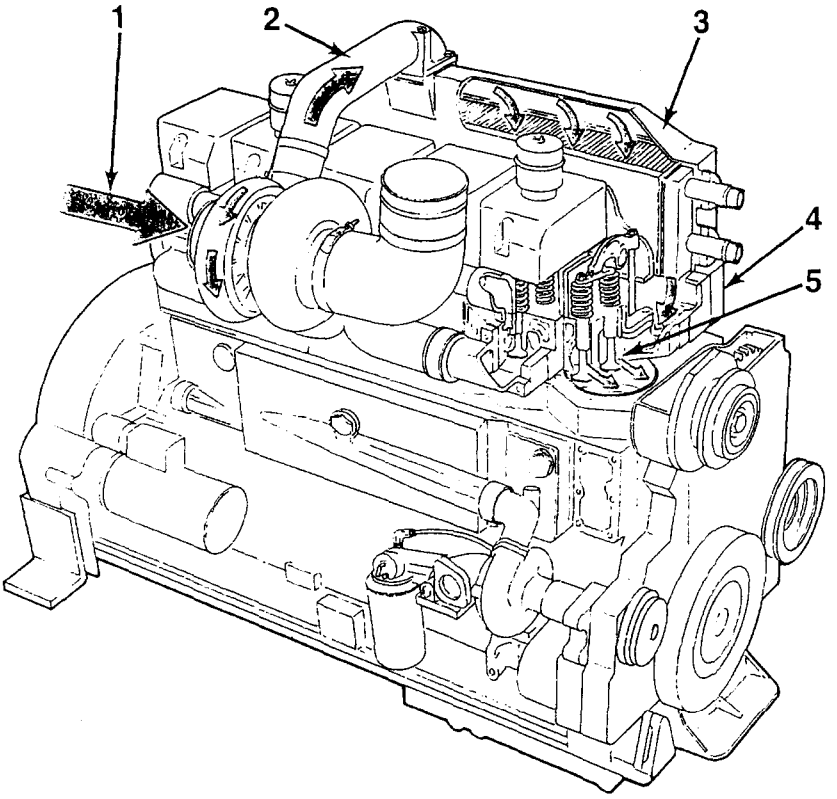


## Exhaust System

1. Exhaust Valve Ports
2. Exhaust Manifold
3. Turbocharger Exhaust Outlet

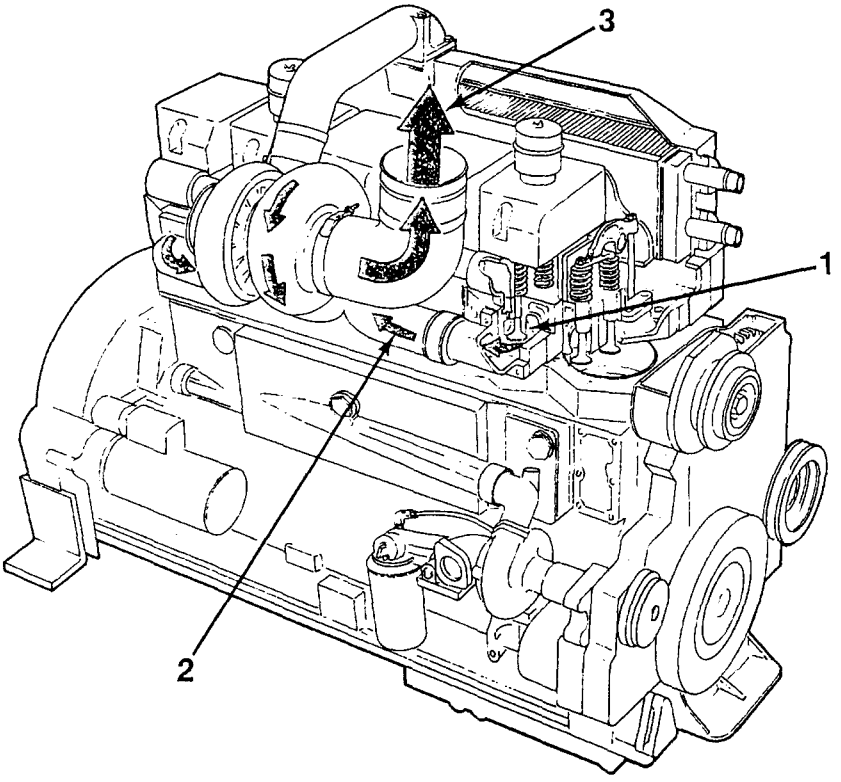

## KTTA Intake

1. Intake Air Inlet to Turbocharger
2. Turbocharger Air to High Stage Turbocharger
3. High Stage Turbocharger
4. Turbocharger Air to Aftercooler
5. Aftercooler
6. Intake Manifold
7. Intake Valve Ports

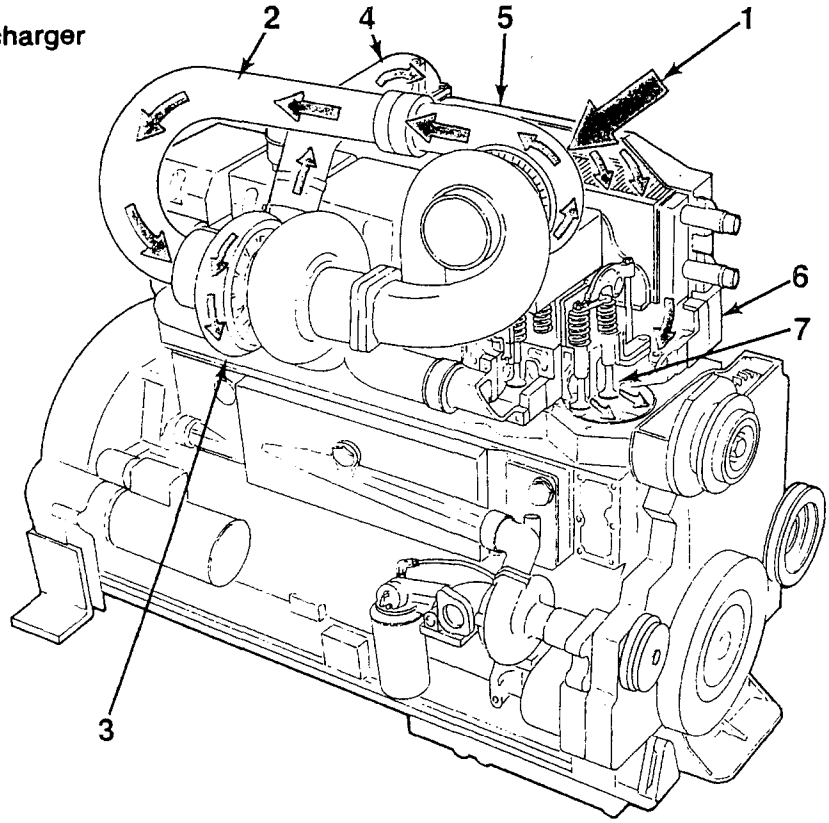


## KTTA Exhaust

1. Exhaust Valve Ports
2. Exhaust Manifold
3. High Stage Turbocharger
4. Low Stage Turbocharger
5. Turbocharger Exhaust Outlet

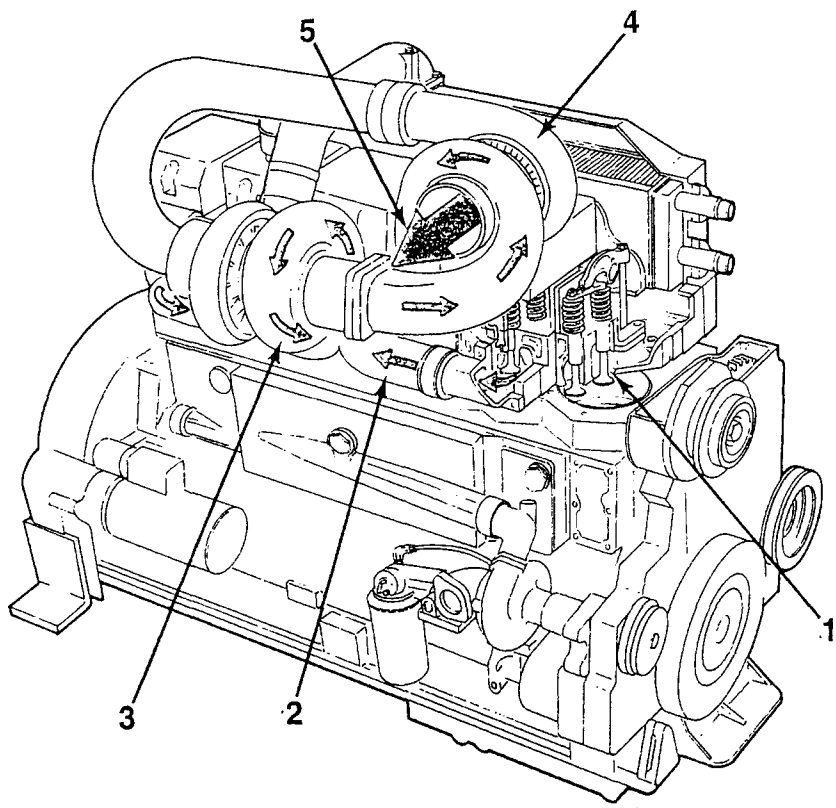

# Service Tools (03-04)

The following special tools are recommended to perform the procedures in Section 03. The use of these tools is shown in the appropriate procedure. These tools can be purchased from your local Cummins Authorized Repair Location.

| Tool No. | Tool Description | Tool Illustration |
|---|---|---|
| 3376891 | **Flourescent Tracer**<br>Add to oil. Use with black light to find oil leaks. | 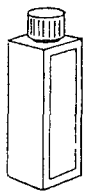 |
| 3377253 | **Blacklight (AC)**<br>Inspect for oil or fuel leak. | 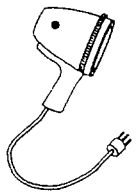 |
| 3377394 | **Blacklight (DC)**<br>Inspect for oil or fuel leak. | 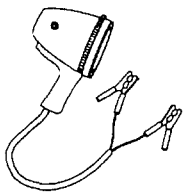 |
| ST-537 | **Dial Depth Gauge**<br>Measure turbocharger axial motion. | 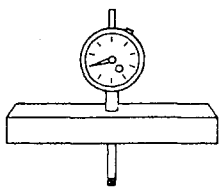 |
| | | |
| | | |

# Turbocharger Turbine Seal Leaks - Check (03-05)

1. Add one unit of Flourescent Tracer, Part No. 3376891, to each 38 liters [10.0 U.S. gallons] of engine lubricating oil.
2. Operate the engine at low idle for 10 minutes.

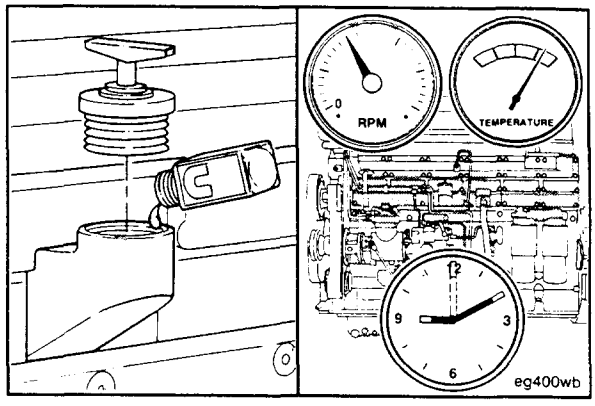


3. Shut the engine off.
4. Allow the turbocharger to cool, and remove the exhaust pipe from the turbine housing.

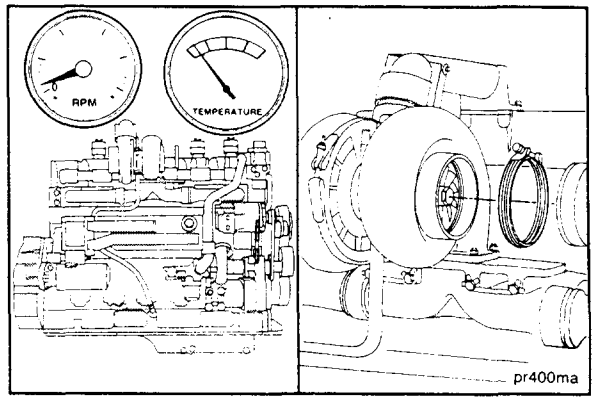


5. Use a high intensity black light, Part No. 3377253 or 3377394, and inspect the turbine housing outlet for oil.

**Note:** A dark blue glow indicates oil, and a yellow glow indicates fuel.

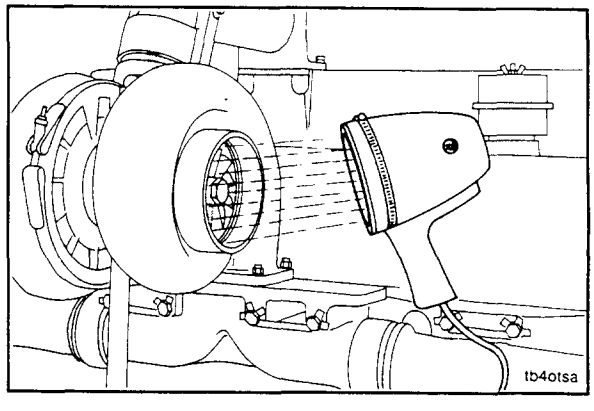


6. If fuel is found in the turbine housing, the problem is excess unburnt fuel. To correct the problem:
   a. Decrease the idle period or increase the idle RPM. The coolant temperature should be maintained at 70°C [160°F]. To adjust the idle, refer to Procedure 05-05.
   b. Check the operation of the cylinder cut-out valve. Repair or replace it if necessary.
   c. Check the STC operation. Refer to Procedure 05-25.

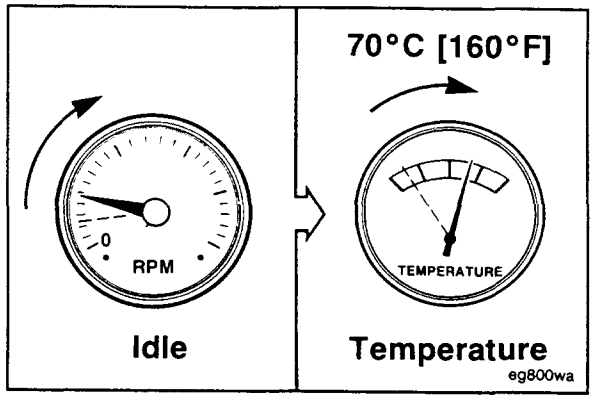

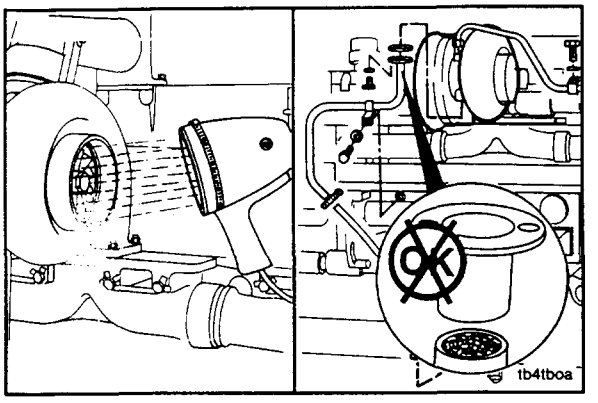


d. If oil is found in the turbine housing, remove the oil drain tube and check for restrictions. Clear any restrictions found.

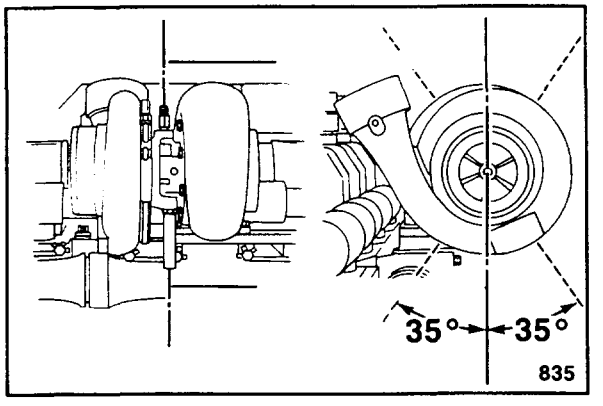


e. Check the angle of the drain tube. The angle of the tube must be within 35 degrees of vertical. Adjust the turbocharger if necessary, refer to Procedure 03-13.

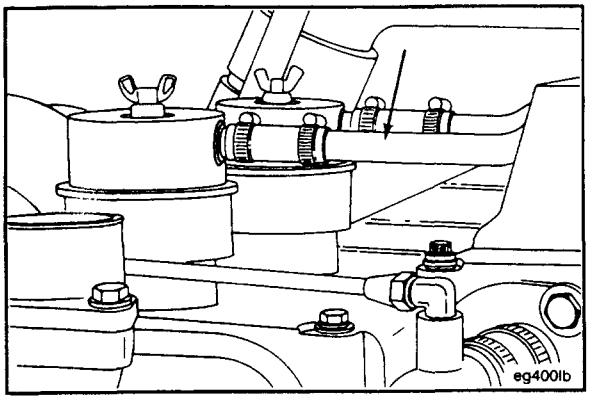


f. If the drain tube is free of restrictions and at the correct angle, check the crankcase breather and tube. Refer to Procedure 02-13.

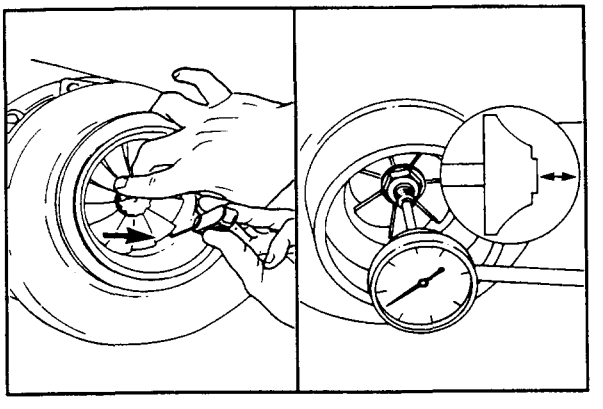

g. Check the turbocharger axial motion and radial clearance. Refer to Procedure 03-12.

h. If the above checks do not reveal the problem, measure the crankcase pressure (blowby). Refer to Procedure 07-03.

If the blowby is acceptable, replace the turbocharger.

If the blowby is not acceptable, isolate the turbocharger, and test the blowby again.

If the blowby is now acceptable, replace the turbocharger.

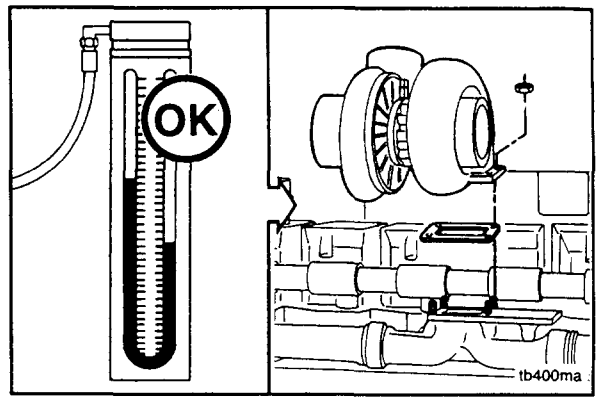


## Compressor Seal Leakage - Check (03-06)

1. Remove the air intake and air cross-over piping (2) from the turbocharger. Refer to Procedure 03-13.

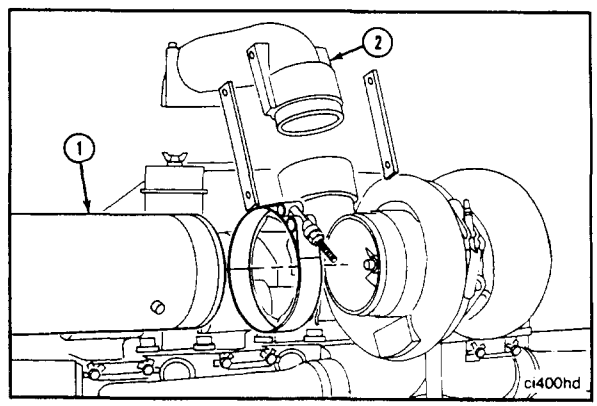


2. Examine the compressor discharge and air cross-over piping for oil.

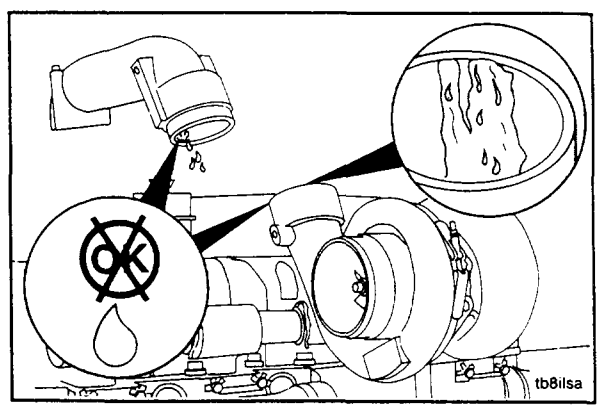


3. If oil is present, check the axial motion and radial clearance of the turbocharger. Refer to Procedure 03-12.

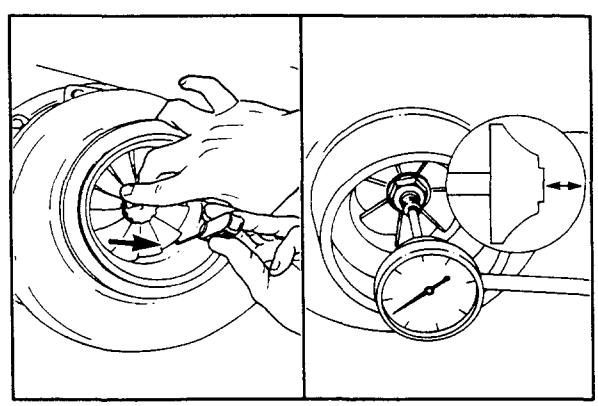

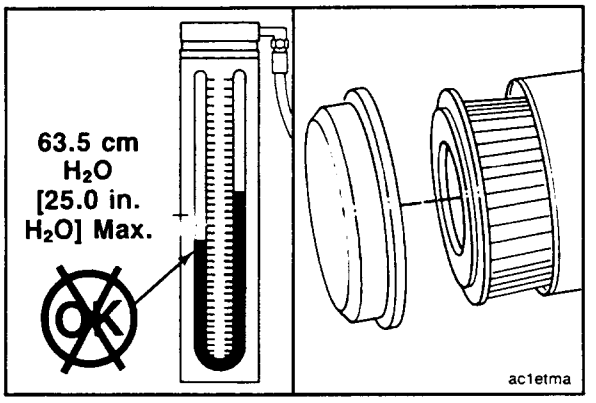


4. Check for intake restriction. Refer to Procedure 03-08.

   If the restriction exceeds specifications replace or clean the air filter element. Refer to the equipment manufacturer's instructions.

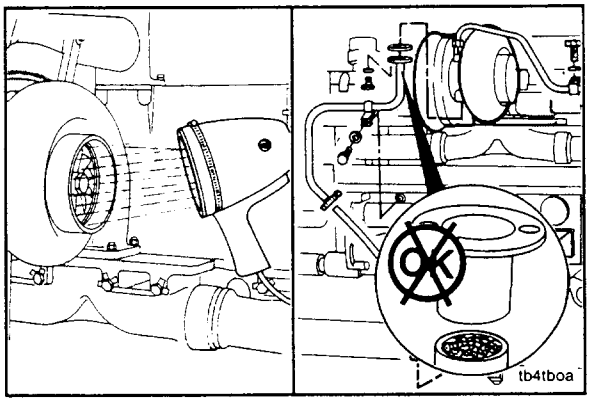


5. Remove the oil drain tube and check for restrictions. Clear any restrictions found.

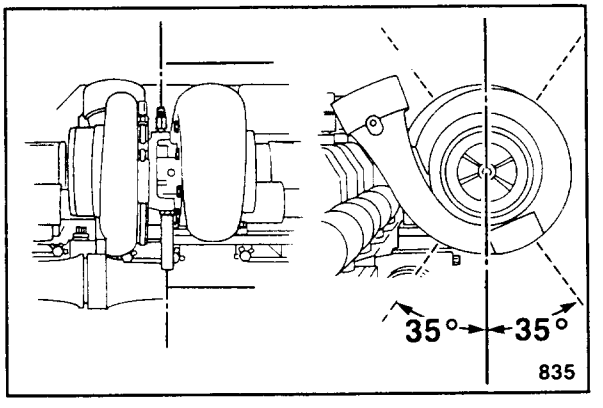


6. Check the angle of the drain tube. The angle of the tube must be within 35 degrees of vertical. Adjust the turbocharger if necessary, refer to Procedure 03-13.

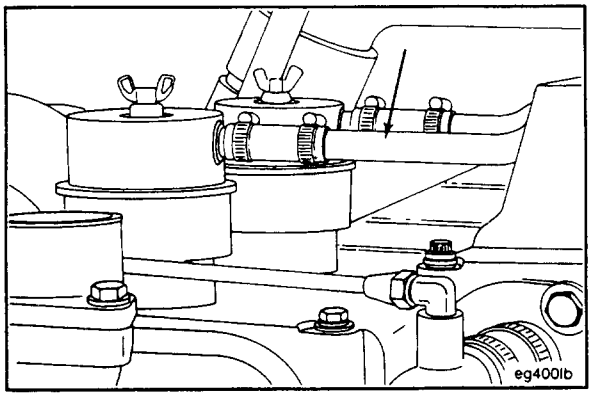


7. If the drain tube is free of restrictions and at the correct angle, check the crankcase breather and tube. Refer to Procedure 02-13.

8. If the above checks do not reveal the problem, measure the crankcase pressure (blowby). Refer to Procedure 07-03.

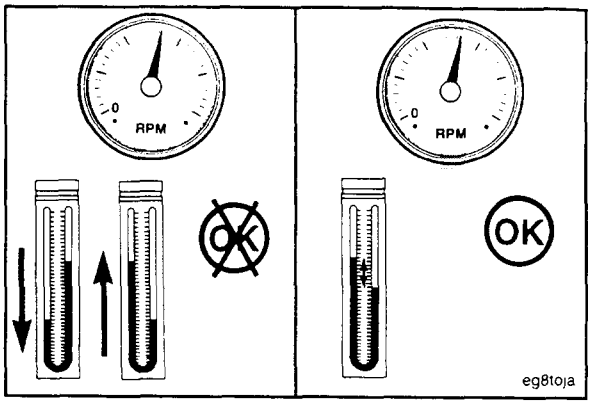


## Correct Turbocharger Installed - Check (03-07)

1. Compare the assembly number (1) on the turbocharger dataplate with the turbocharger specified in the engine CPL (Control Parts List) manual.

**Note:** The CPL number for each engine is listed on the engine dataplate (3).

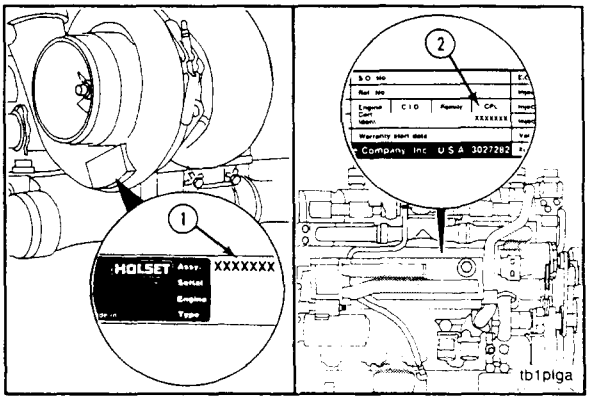


2. If the correct turbocharger was not installed, remove it and install the correct turbocharger. Refer to Procedure 03-14 (KTTA) or 03-13 (KT/KTA).

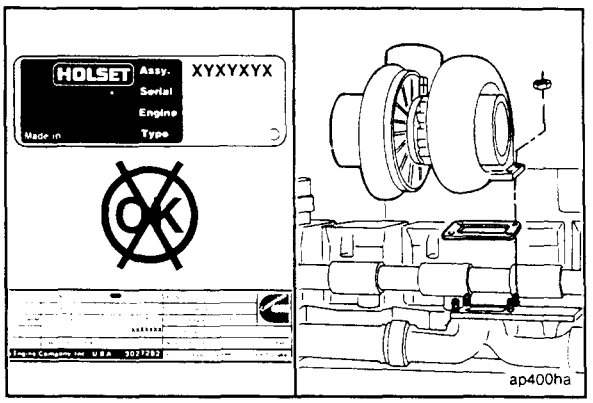


## Intake Air Restriction - Check (03-08)

1. Install a vacuum gauge or water manometer in the intake air piping between the turbocharger and the air filter. The gauge must have a capacity of 1270 mm - $H_2O$ [50 inch $H_2O$].

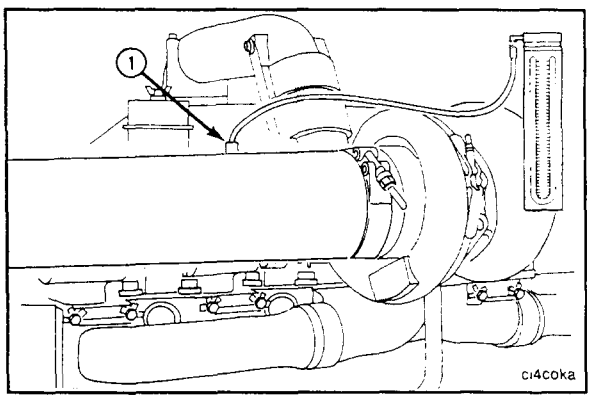

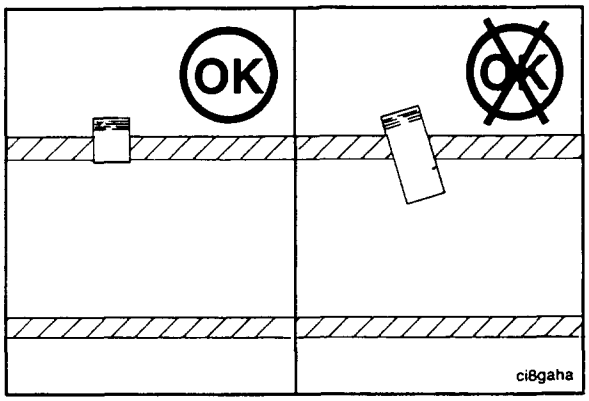


**Note:** The gauge adapter (or fitting) must be installed at a 90 degree angle to the air flow in a straight section of pipe. The adapter location must be at least one pipe diameter before the turbocharger.

The adapter must not extend through the wall of the air intake tubing.

If the adapter must be located in a curved section of tubing, locate it on the flat side of the curve, not in the radius.

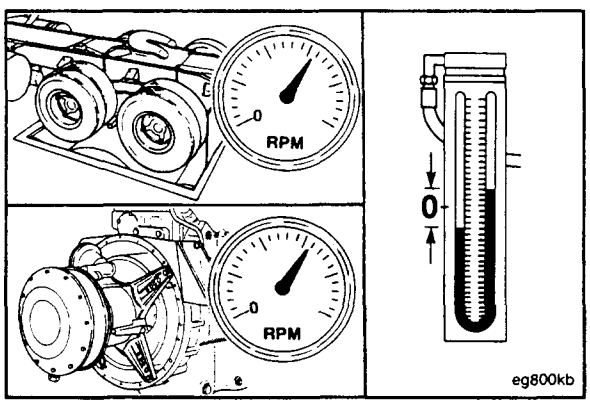


2. Operate the engine at full throttle and rated RPM with maximum load.
3. Record the reading of the gauge or manometer.

**Note:** Restrictions must not exceed 635 mm $H_20$ [25.0 inch $H_20$].

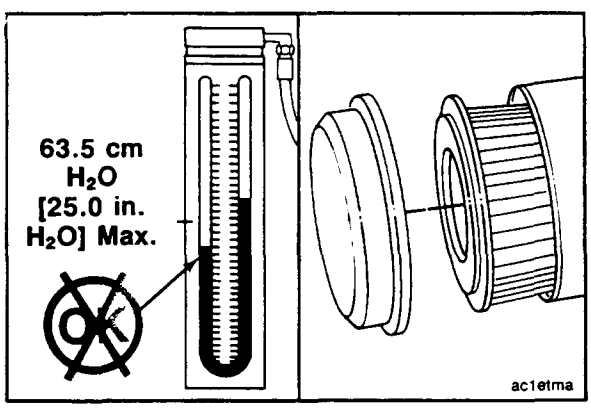


4. If the restriction exceeds specifications, do the following:
   a. Replace or clean the air filter element. Refer to the equipment manufacturer's instructions.

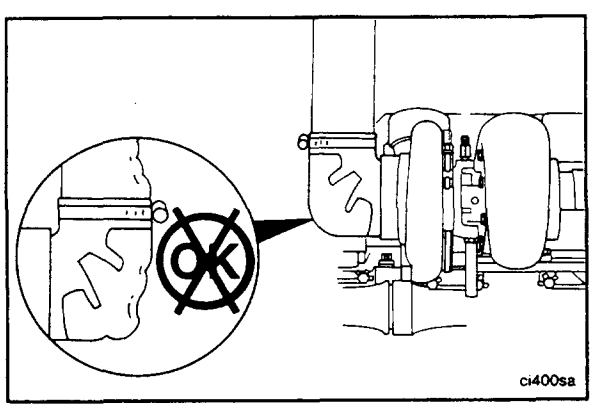


   b. Visually inspect the intake air piping for damage. Refer to the equipment manufacturer's instructions.

**Note:** If no damage is visible, check the size and routing of the intake air piping. Refer to the Installation Recommendations Bulletin.

c. Remove the test equipment.

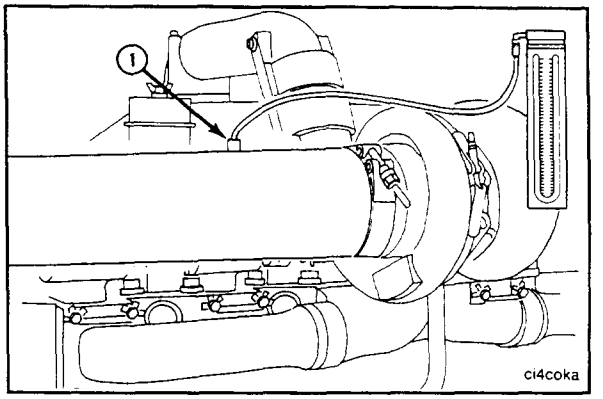


## Exhaust Restriction - Check (03-09)

1. Install a manometer or pressure gauge in the exhaust piping. The gauge must have a capacity of 75 mm - Hg [3 inch - Hg] or 1270 mm - $H_2O$ [50 inch - $H_2O$].

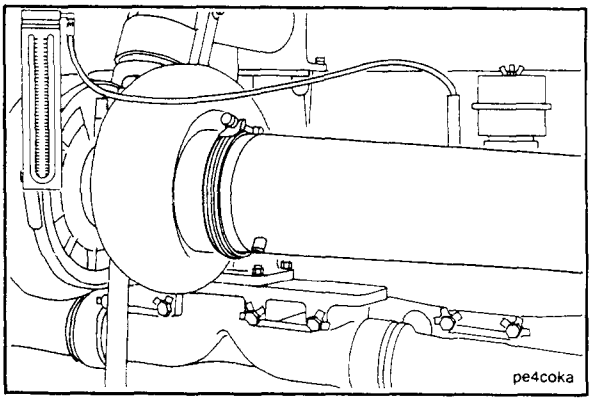


**Note:** The gauge adapter (or fitting ) must be installed at a 90 degree angle to the exhaust flow in a straight section of pipe. The adapter location must be at least 25 mm [10.0 inch] after the turbocharger.

The adapter must not extend through the wall of the exhaust tubing.

If the adapter must be located in a curved section of tubing, locate it on the flat side of the curve, not in the radius.

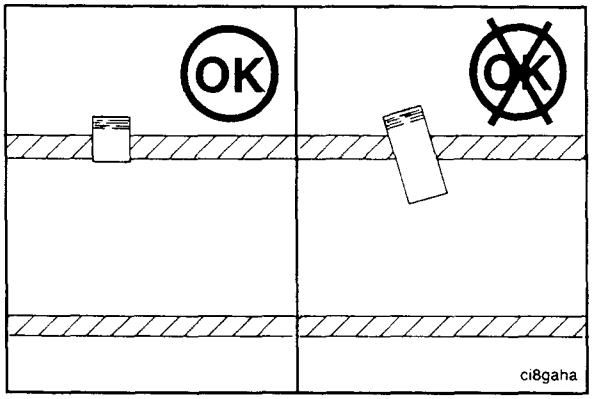


2. Connect a 13 mm [12 inch] piece of metal tubing between the gauge adapter and the gauge hose. This will prevent damage to the hose from the extreme heat.

3. Operate the engine at rated RPM and load, and record the manometer reading.

**Note:** Exhaust pressure must not exceed 7.5 cm [3.0 inch Hg].

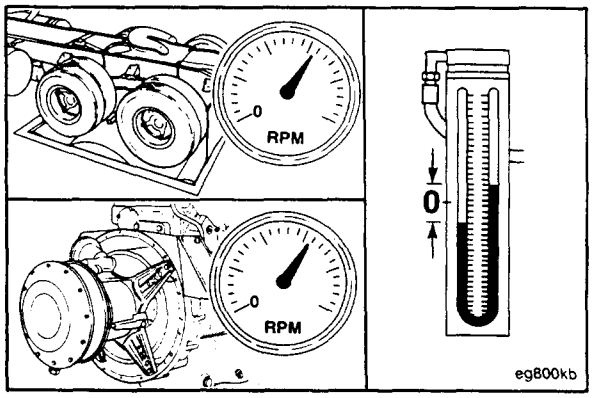

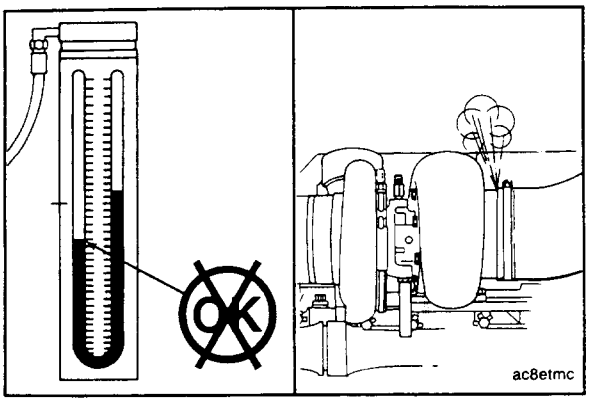


4. If the exhaust pressure exceeds the specification, visually inspect the exhaust piping for damage. Refer to the equipment manufacturer's instructions.

**Note:** If no damage is visible, check the size and routing of the exhaust piping. Refer to the Installation Recommendations Bulletin.

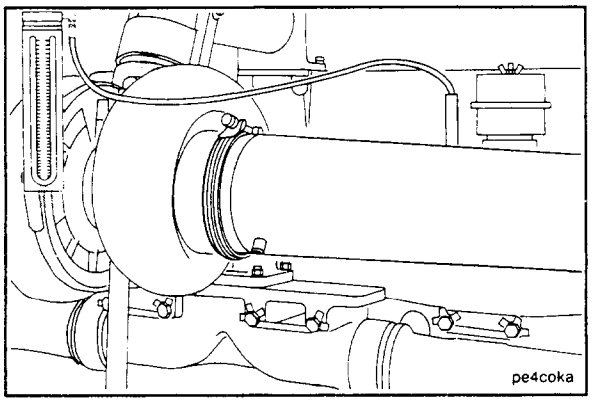


5. Remove the test equipment.

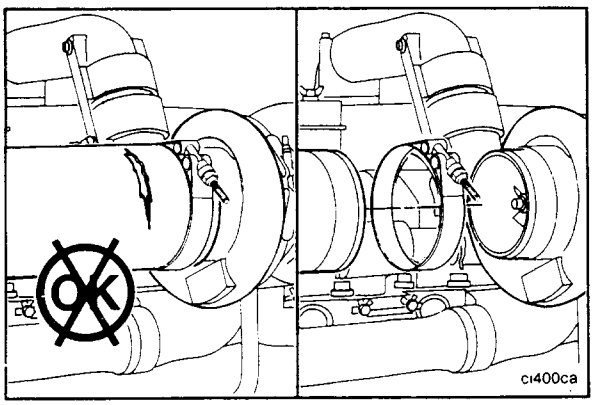


## Air Leaks - Check (03-10)

**Caution: The engine air intake must be filtered to prevent dirt and debris from entering the engine. If intake air piping is damaged or loose, unfiltered air will enter the engine and cause premature wear.**

1. Visually inspect the system for damaged or loose intake piping.
2. Replace damaged pipes, and tighten loose clamps to 8.4 N•m [75 in-lb].

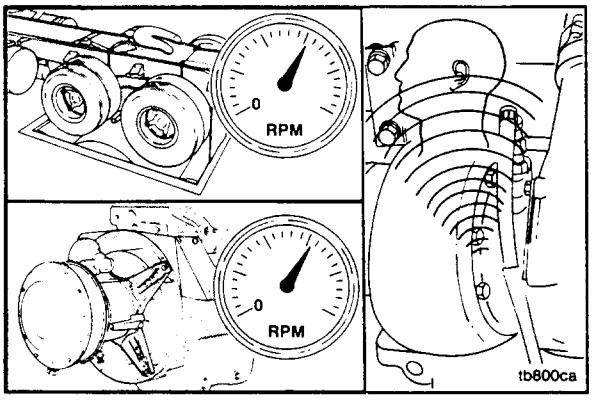


3. Operate the engine at rated RPM and load.
4. Listen for a "high pitch" noise from the turbocharger.

5. This type of noise can be caused by an air leak from the following:

   a. Turbocharger to aftercooler air supply hose.

      Inspect the hose for damage. Replace o-rings. Tighten the hose clamps. Refer to Procedure 07-04.

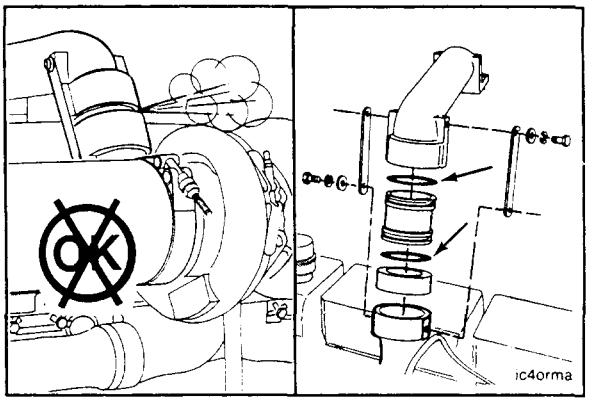


   b. Air crossover to aftercooler connection leakage.

      Replace the air crossover gaskets. Refer to Procedure 07-04.

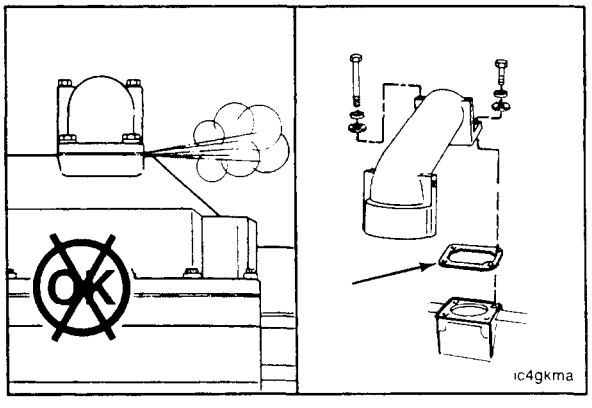


   c. Turbocharger to exhaust manifold gasket leak.

      Replace the gasket. Refer to Procedure 03-14 (KTTA) or 03-13 (KT/KTA).

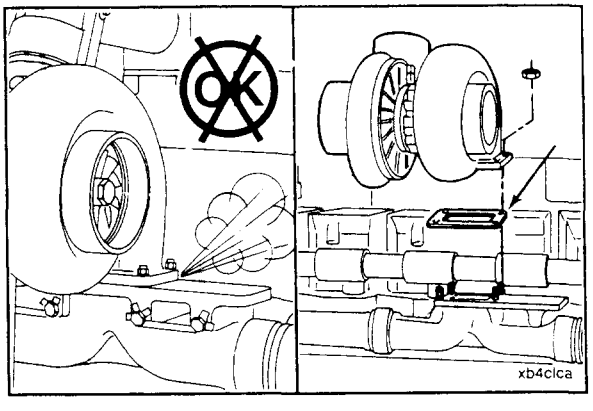


   d. Turbine housing sealing surface leak.

      Tighten the capscrews:

| Turbocharger | Capscrew |
|---|---|
| HC-5A | 14 N•m [120 in lb] |
| T18A | 12 N•m [105 in lb] |

      If an air leak is still present, replace the turbocharger. Refer to Procedure 03-14 (KTTA) or 03-13 (KT/KTA).

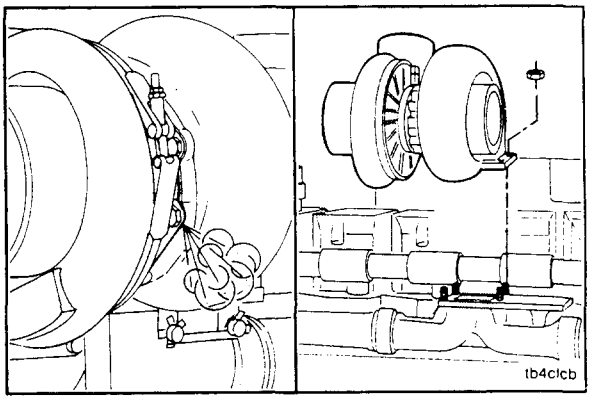

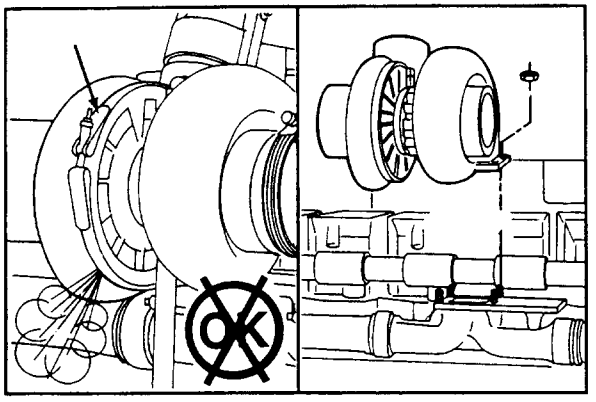

e. Compressor housing sealing surface air leaks.

Tighten the V-band clamp or capscrew as follows.

| Turbocharger | V-band | Capscrew |
|---|---|---|
| HC-5A | 14N•m [120in-lb] | 27N•m [230in-lb] |
| T18A | 5.5N•m [50in-lb] | NA |

If an air leak is still present, remove and replace the turbocharger. Refer to Procedure 03-14 (KTTA) or 03-13 (KT/KTA).

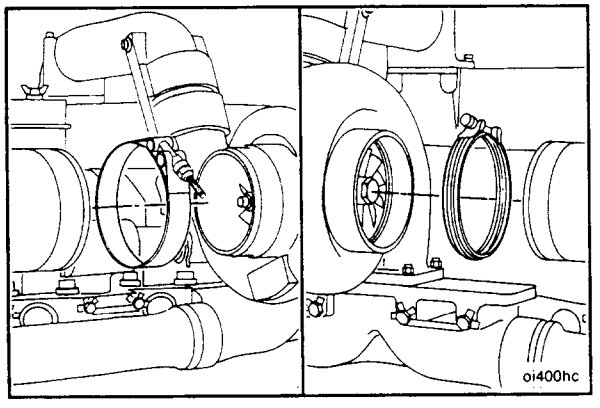


## Turbocharger Blade Damage - Check (03-11)

1. Remove the intake and exhaust pipes from the turbocharger.

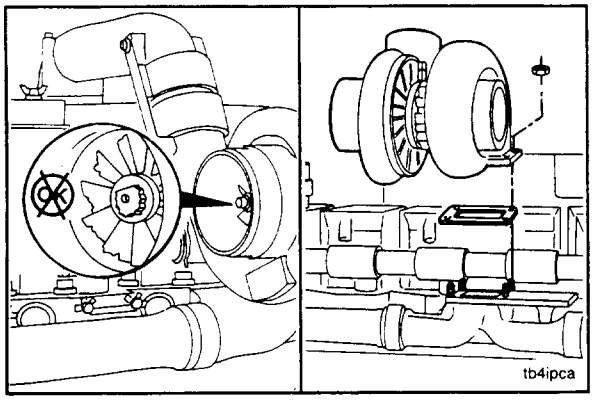


2. Visually inspect the turbocharger compressor impeller blades for damage.
3. Rebuild or replace the turbocharger if damage is found. Refer to Procedure 03-14 (KTTA) or 03-13 (KT/KTA).

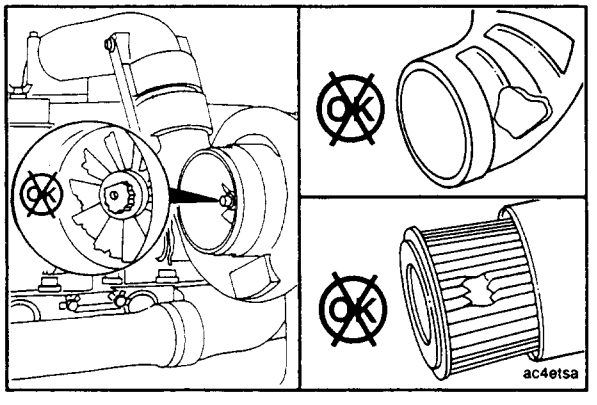


4. If the impeller is damaged, inspect the intake air piping and the filter element for damage.

**Note:** Repair any damage before operating the engine.

5. Inspect the turbine wheel for damage.
6. Rebuild or replace the turbocharger if damage is found. Refer to Procedure 03-14 (KTTA) or 03-13 (KT/KTA).

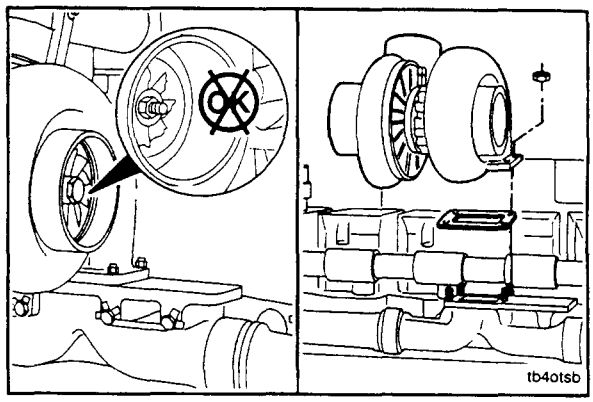


## Turbocharger Axial And Radial Clearance - Check (03-12)

1. Remove the intake and exhaust piping from the turbocharger.

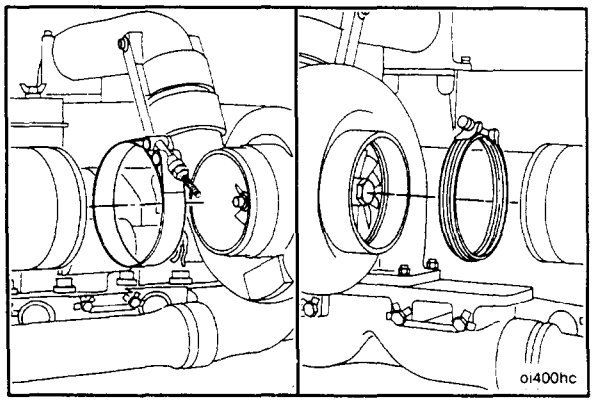


2. Use a wire-type feeler gauge to measure the radial clearance (side to side).

**Note:** Hold the shaft toward the feeler gauge to check this dimension.

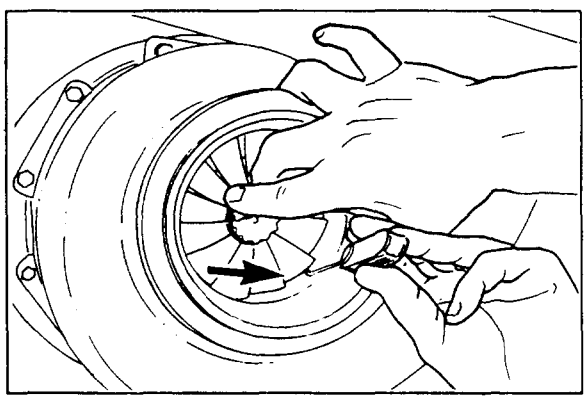

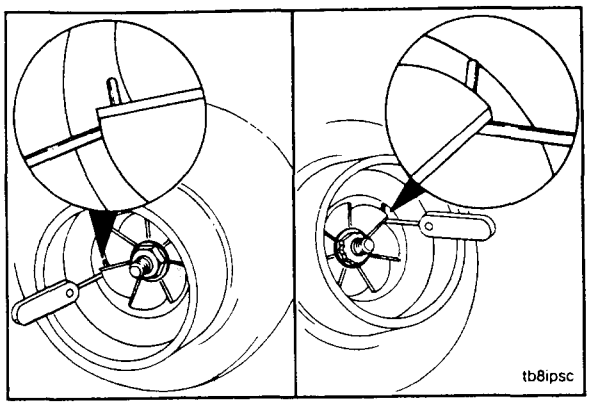


3. Replace the turbocharger if the radial clearance is less than specified below.

| Model HC5A | |
|---|---|
| **Compressor Impeller** | |
| Min. | Max. |
| 0.15 mm [0.006 in] | 0.45 [0.018 in] |
| **Turbine Wheel** | |
| Min | Max |
| 0.20 mm [0.008 in] | 0.55 [0.021 in] |

| Model T18A | |
|---|---|
| **Compressor Impeller** | |
| Min. | Max. |
| 0.08 mm [0.003 in] | 0.18 [0.007 in] |
| **Turbine Wheel** | |
| Min | Max |
| 0.08 mm [0.003 in] | 0.18 [0.007 in] |

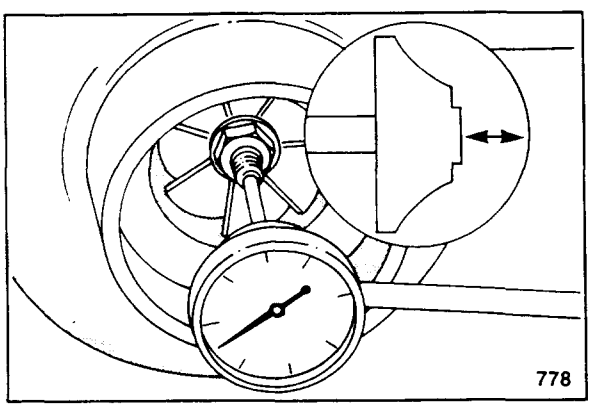


4. Use Part No. ST-537 Dial Depth Gauge or a dial indicator. Measure the axial motion (end to end). Replace the turbocharger if axial motion is greater than specified below.

| Model | Dimension | |
|---|---|---|
| | Min | Max |
| HC5A | 0.05mm [0.002in] | 0.13mm [0.005in] |
| T18A | 0.10mm [0.004in] | 0.23mm [0.009in] |

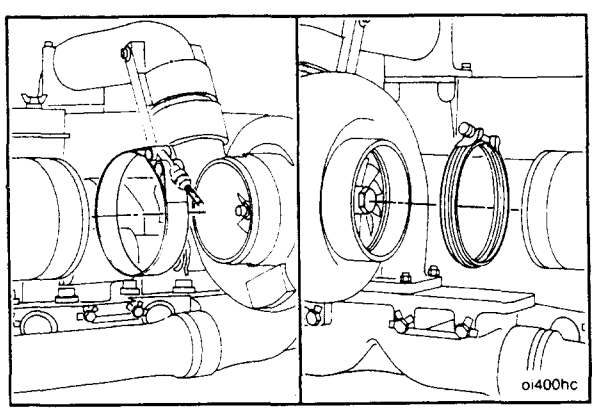


## Turbocharger - Replace (03-13)

1. Remove the intake and exhaust pipes from the turbocharger.

2. Remove the turbocharger air crossover. Remove the two retaining straps and four capscrews from the crossover.

   Remove the air crossover assembly. Remove and discard the o-rings, and dust seal.

**Note:** Some engines contain a hose and clamps in place of the o-ring, dust seal and retainer straps.

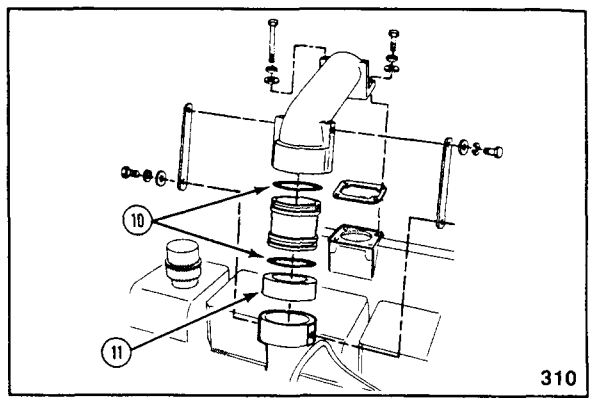


3. Disconnect the oil drain hose from the turbocharger.

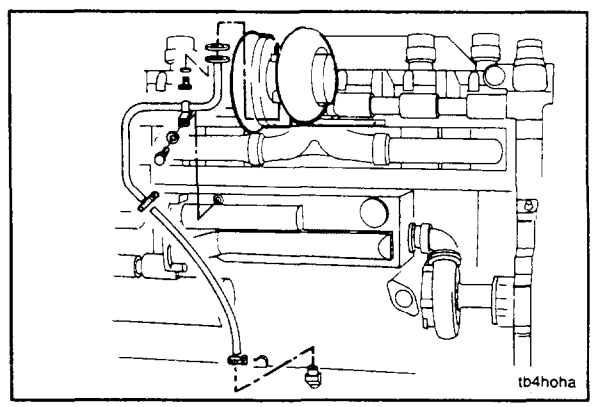


4. Remove the mounting nuts, washers, and the turbocharger. Remove and discard the gasket.

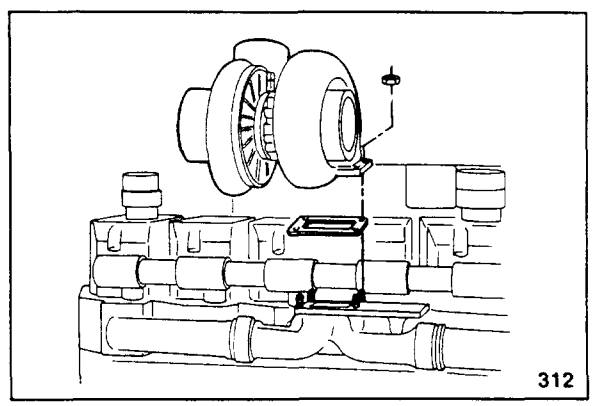


## Check For Reuse

1. Clean and check the turbocharger for reuse. Refer to Procedure 03-12.

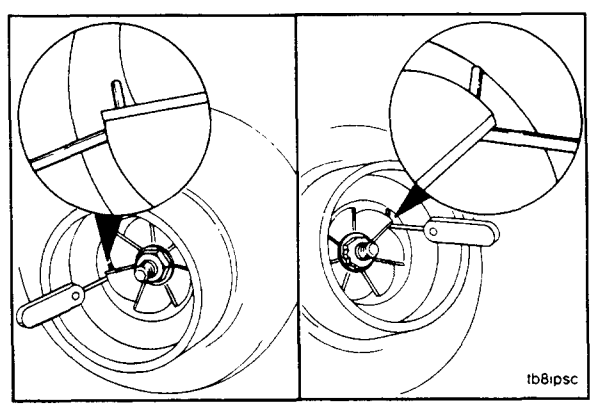

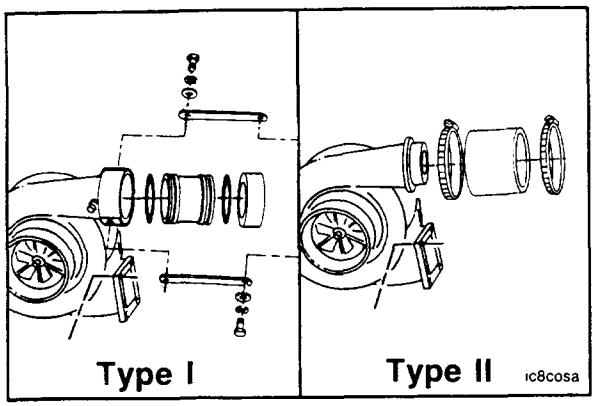


## Install

1. Turbochargers are available with two types of compressor housings.

   Type 1, requires 2 o-rings, dust seal, connector pipe, and two retainer straps.

   Type 2, requires 2 hose clamps and a hose.

**Note:** Changing from one type to another, requires a new air crossover.

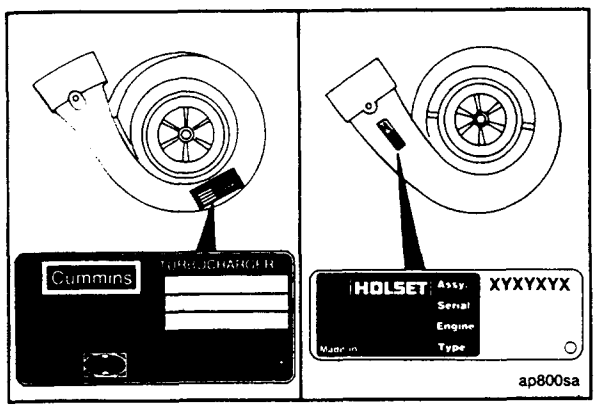


2. Two different turbochargers are used on the K19 engine, AiResearch and Holset. Refer to the data tag on the turbocharger to determine the model.

**Note:** The name is also cast on the housing of each turbocharger.

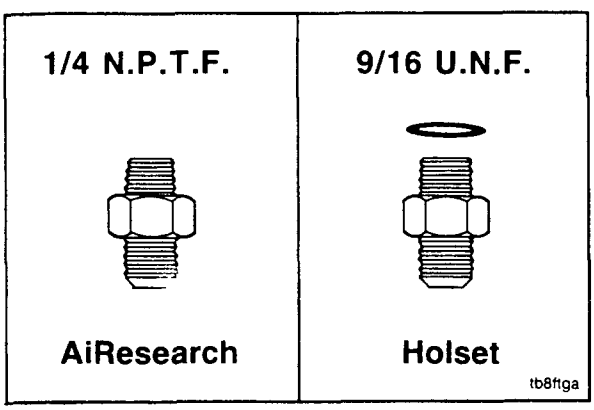


3. Two different types of oil supply fittings are used.

   The AiResearch turbocharger uses a 1/4 NPTF (pipe plug) fitting.

   The Holset turbocharger uses a 9/16-18 UNF (straight thread) O-ring type fitting.

**Note:** A new fitting will be required if the model of turbocharger being installed is different from the original.

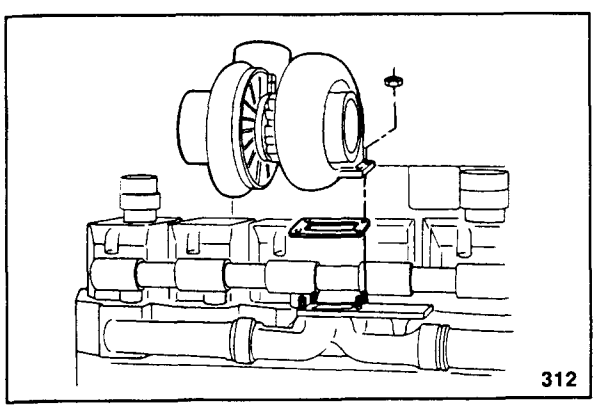


4. Apply anti-seize compound to the mounting studs. Install the gasket. The word "OUT" must be towards the turbocharger.

   Install the turbocharger, washers, and nuts. Tighten the nuts to 35 N•m [25 ft-lb].

5. Position the turbocharger drain tube. The drain tube must be within 35 degrees of vertical. Turn the bearing housing to align the tube if necessary.

**Note:** Some turbochargers use the through bolt style to attach the bearing housing to the turbine housing. Other turbochargers use the clamp plate style.

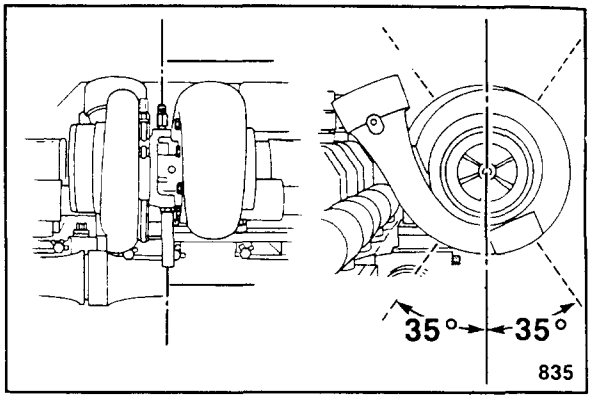


a. Adjust the through bolt style.

1) Bend the lockplate off the capscrew heads. Remove the capscrews.

2) Rotate the bearing housing. Align the drain tube and the capscrew holes.

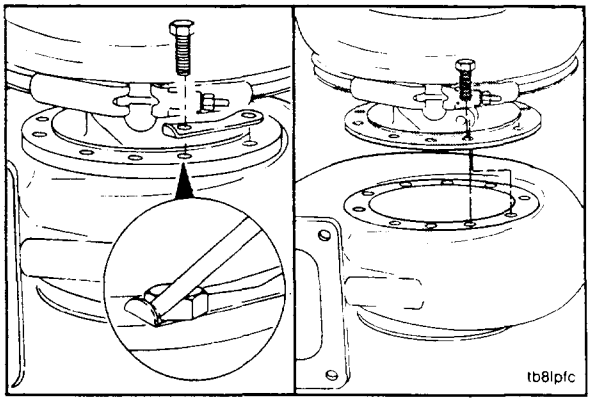


3) Install the lockplates and capscrews. Tighten the capscrews to 12 N•m [105 in-lb]. Bend the lockplate tabs over the capscrew heads.

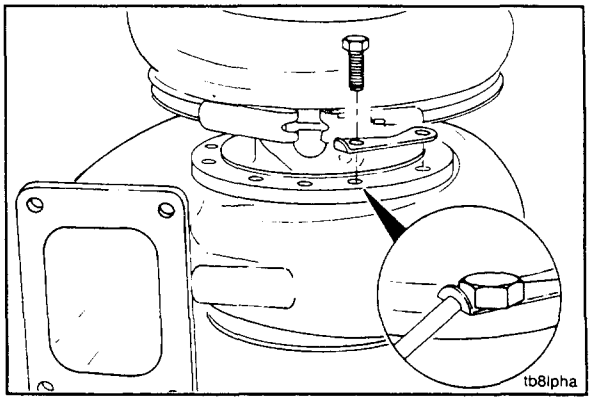


b. Adjust the clamping plate style.

1) Bend the lockplates off the capscrew heads. Loosen all of the capscrews.

2) Rotate the bearing housing until the angle of the drain tube is correct.

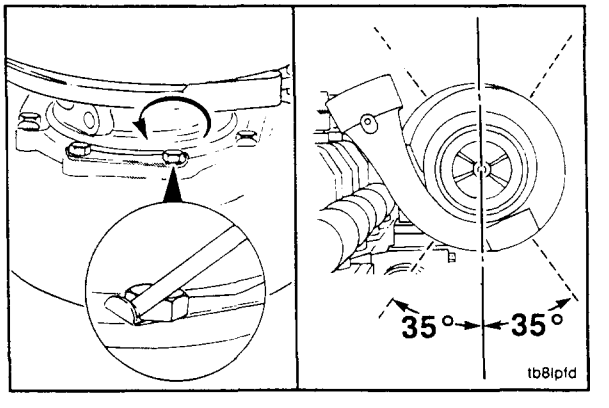

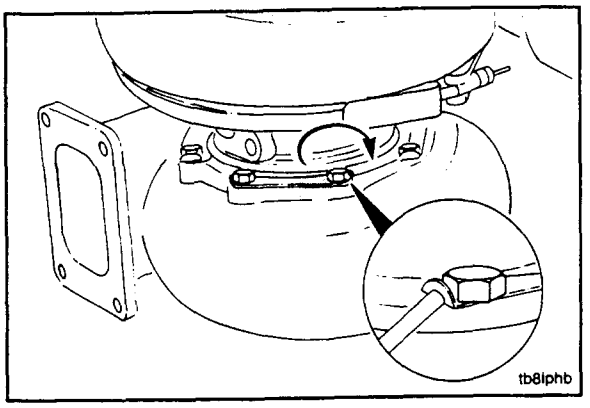


3) Tighten the capscrews to 12 N•m [105 in-lb]. Bend the lockplates over the capscrew heads.

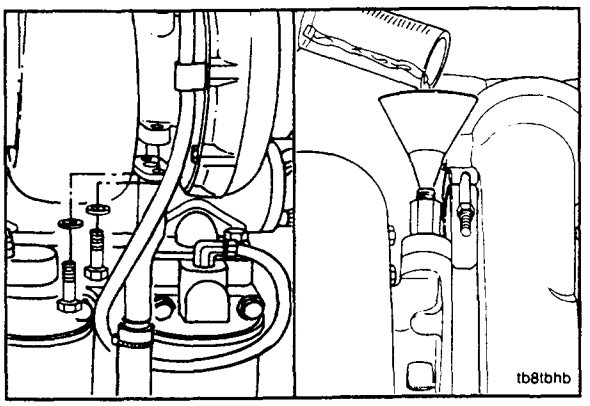


**Caution: These parts are a safety-related item. Be sure the parts are clamped correctly to prevent fretting.**

6. Install the oil drain tube. Tighten the capscrews to 45 N•m [35 ft-lb].
7. Pour 50 to 60 cc [2.0 to 3.0 ounces] of clean engine oil into the turbocharger oil supply fitting.

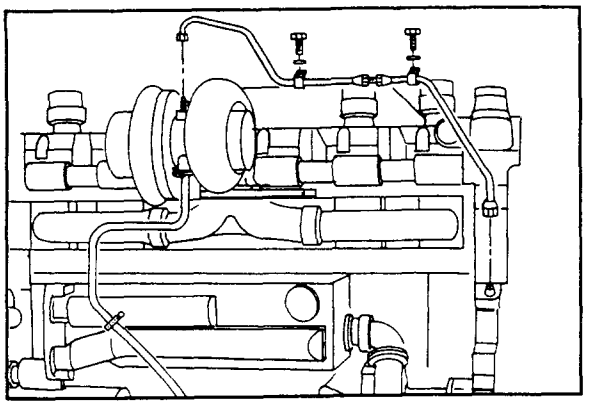

8. Connect the oil supply hose. Tighten the hose fitting as indicated below.

| | Torque Value | |
|---|---|---|
| AiResearch | 45 N•m | [35 ft-lb] |
| Holset | 20 N•m | [15 ft-lb] |

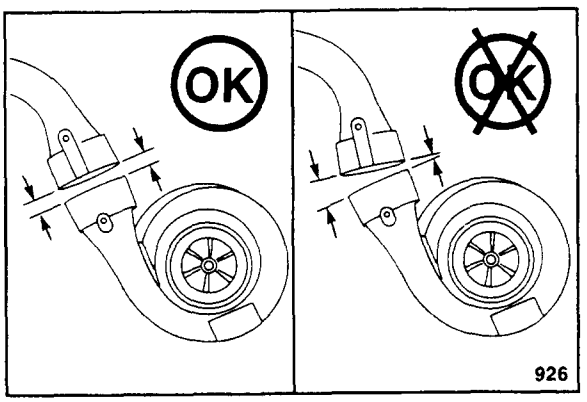


9. Check the air crossover to turbocharger alignment.
   a. Install the air crossover on the intake manifold or aftercooler.
   b. Look at the alignment between the crossover and the turbocharger compressor outlet.
   c. Remove the crossover and proceed with the assembly if the alignment is correct.
   d. Proceed to the next step to adjust the compressor housing if the alignment is incorrect.

10. To adjust the turbocharger compressor housing alignment:
    a. Loosen the V band clamp.
    b. Turn the compressor housing to the correct alignment.
    c. Tighten the clamp: AiResearch 6.8 N•m [60 in-lb] Holset 13.6 N•m [120 in-lb]
    d. Tap the clamp with a mallet and retighten the clamp.

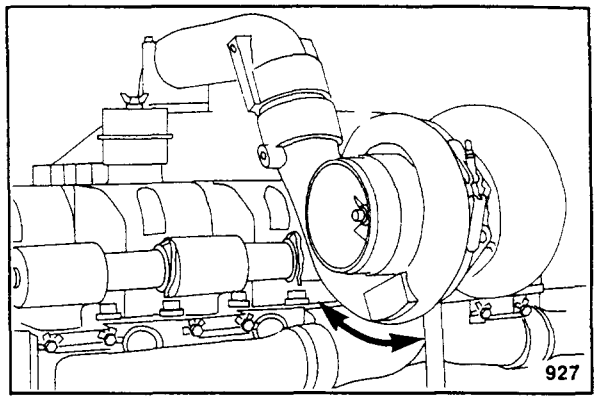


**Install (hose connection) crossover**

11. Install the hose (11) and two hose clamps (10) on the air crossover tube.
12. Install the air crossover, slide the hose down over the turbocharger outlet. Install the gasket and capscrews. Tighten the capscrews to 40 N•m [30 ft-lb]. Tighten the clamps to 8.4 N•m [75 in-lb].

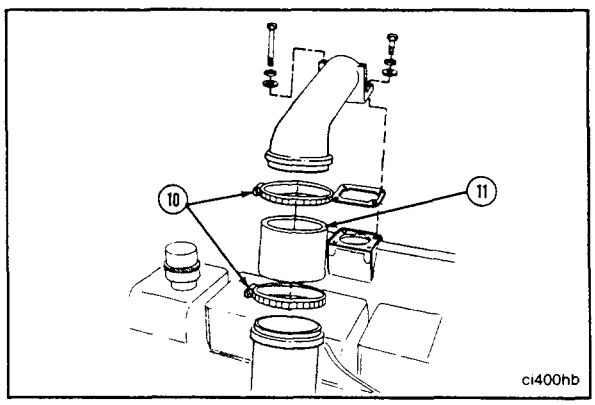


**Install (o-ring connection) crossover**

13. Lubricate the o-rings with vegetable oil and install them on the tube.
14. Install the tube in the crossover. Install the dust seal (11) on the tube.
15. Install the gasket, crossover, and the capscrews. Tighten the capscrews to 40 N•m [30 ft-lb].
16. Install the retainer straps, washers, and the capscrews. Tighten the capscrews to 20 N•m [15 ft-lb].

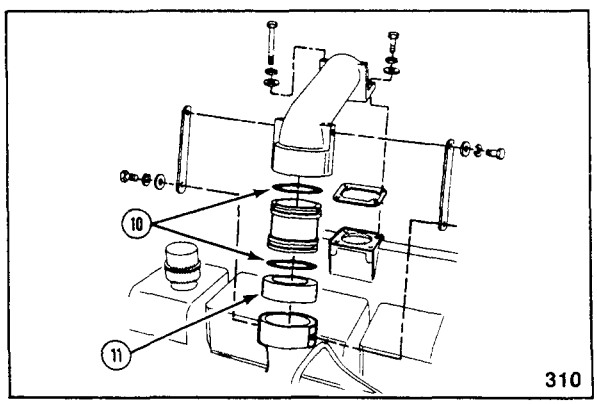


17. Connect the inlet piping to the turbocharger. Tighten the clamps to 8.4 N•m [75 in-lb].

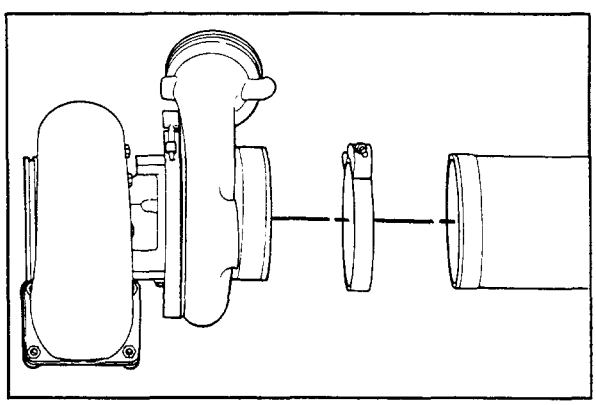

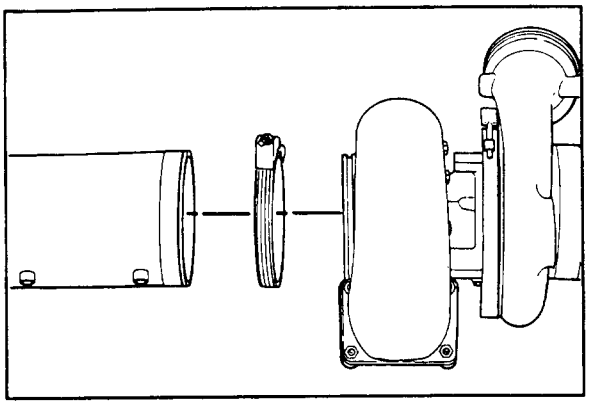

18. Connect the exhaust piping to the turbocharger. Tighten the V band clamp to 4.0 N•m [35 in-lb].

**Note:** Some engines contain a flanged exhaust connection. Tighten the capscrews to 45 N•m [35 ft-lb].

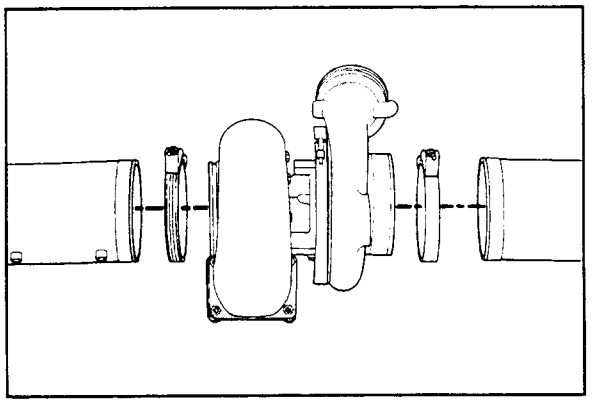

## Series Turbocharger - Replace (03-14)

1. Remove the intake tubing from the low stage turbocharger.
2. Remove the exhaust connection from the low stage turbocharger.

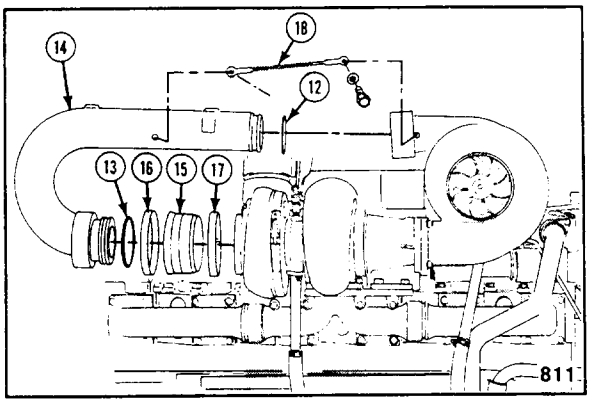


3. Remove the air transfer tube, between the low stage and high stage compressor housings.
   a. Remove the two retaining straps (18). Loosen the hose clamps (16) and (17).
   b. Remove the air transfer tube (14). Remove and discard the o-rings (12 & 13) and the dust seal (15).

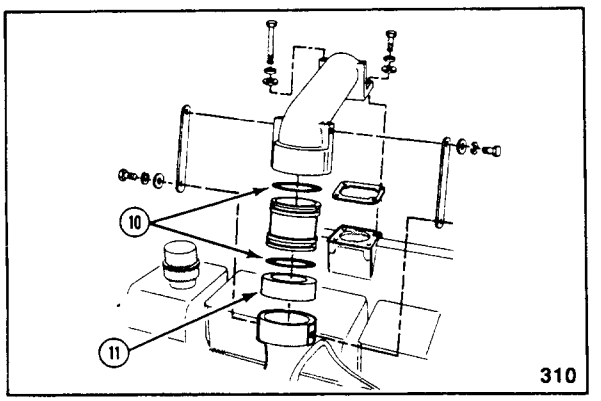


4. Remove the two retaining straps and four capscrews. Remove the air crossover assembly. Remove and discard the o-rings and dust seal.

5. Disconnect the oil supply hoses from both turbochargers.

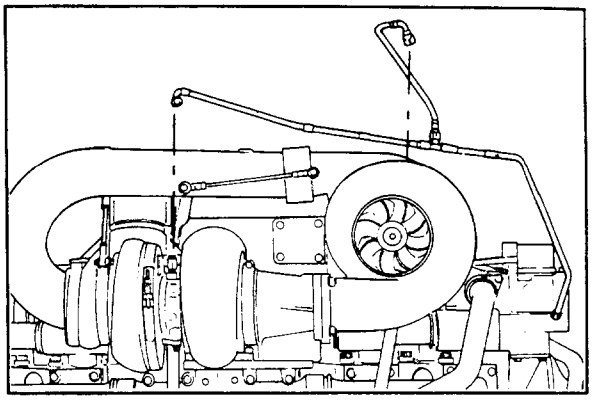

6. Remove the oil drain tubes and hoses from both turbochargers.

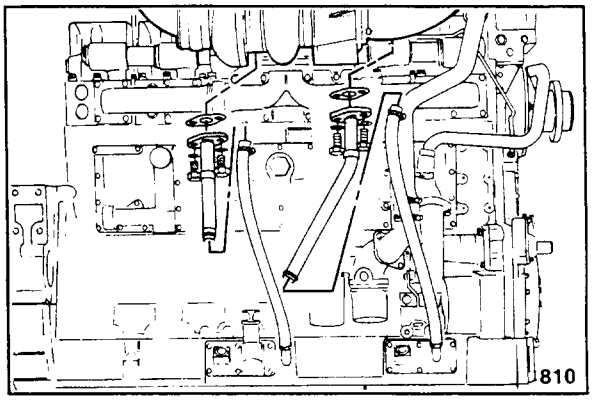


**Note:** Tag the turbocharger mounting nuts and washers for future identification. The nuts are designed for high strength.

7. Remove the mounting nuts (2) and washers (1). Remove the low stage turbocharger. Discard the gasket (4).

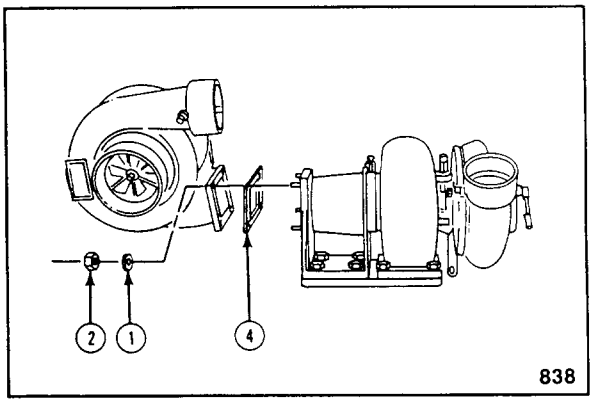


**Note:** This assembly weighs more than 23 kg [50 lb]. Personal injury can result.

8. Remove the mounting nuts (2) and washers (1). Remove the high stage turbocharger and support assembly. Remove and discard the gasket (3).

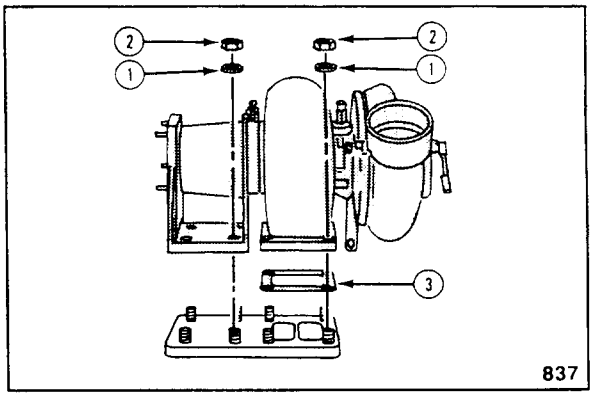

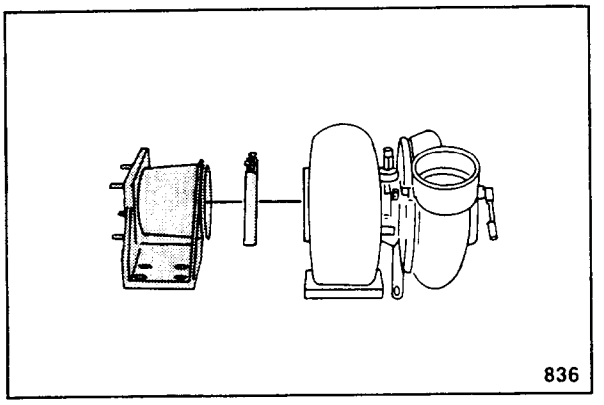


9. Loosen the v band clamp. Separate the high stage turbocharger and mounting support.

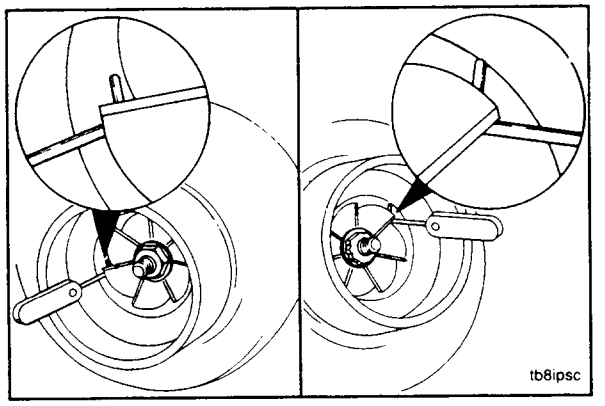


## Check For Reuse

1. Clean and check the turbochargers and components for reuse. Refer to Procedure 03-12.

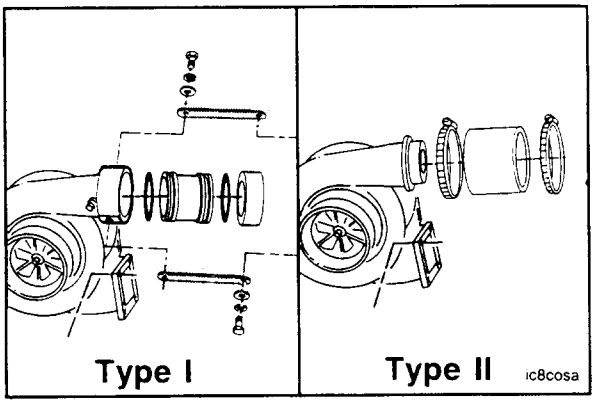


## Install

1. Turbochargers are available with two types of compressor housings.

   Type 1, requires 2 o-rings, dust seal, connector pipe, and two retainer straps.

   Type 2, requires 2 hose clamps and a hose.

**Note:** Changing from one type to another, requires a new air crossover.

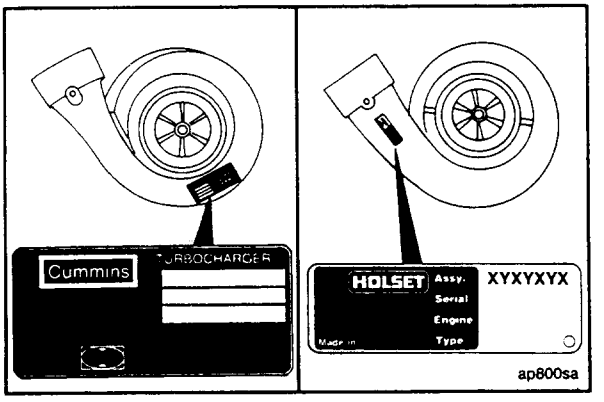


2. Two different turbochargers are used on the K19 engine, AiResearch and Holset. Refer to the data tag on the turbocharger to determine the model.

**Note:** The name is also cast on the housing of each turbocharger.

3. Two different types of oil supply fittings are used.

   The AiResearch turbocharger uses a 1/4 NPTF (pipe plug) fitting.

   The Holset turbocharger uses a 9/16-18 UNF (straight thread) O-ring type fitting.

**Note:** A new fitting will be required if the model of turbocharger being installed is different from the original.

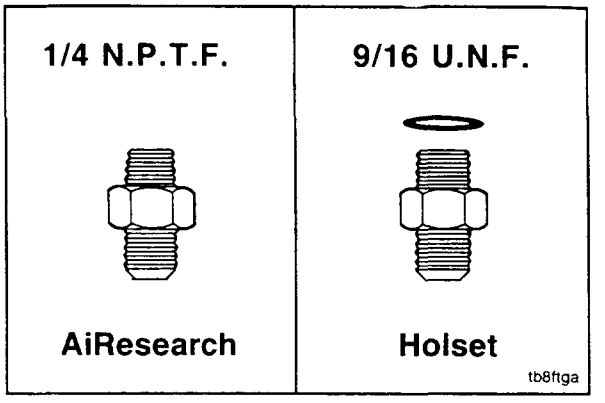


**Caution: The turbochargers and components must be installed in the sequence given. Failure to be so can result in component failure.**

**Note:** The high stage turbocharger (1) attaches directly to the exhaust manifold. This turbocharger has a divided turbine housing.

The mounting flange on the high stage turbocharger housing is much smaller than that of the low stage turbocharger (2).

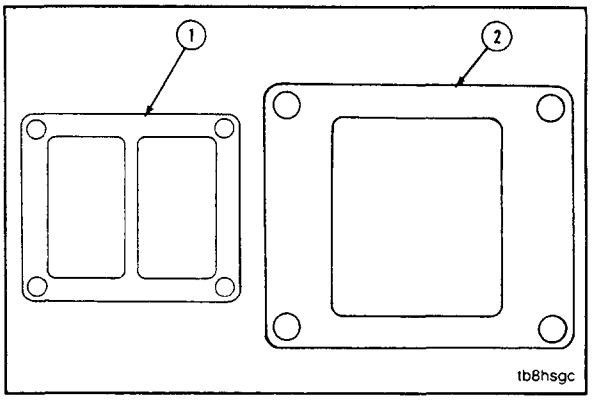


4. Install the mounting support and V band clamp on the high stage turbocharger.

   Tighten the clamp enough to hold the parts together. The parts must still rotate.

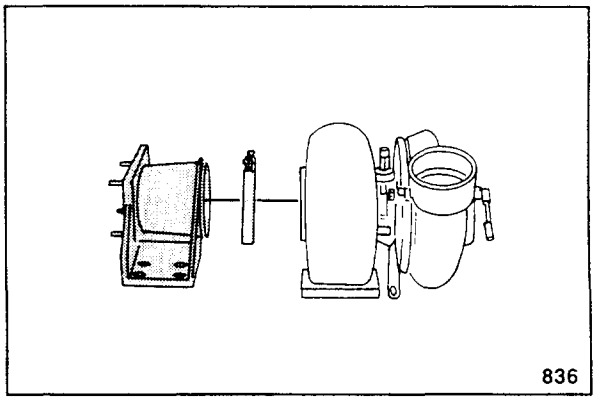

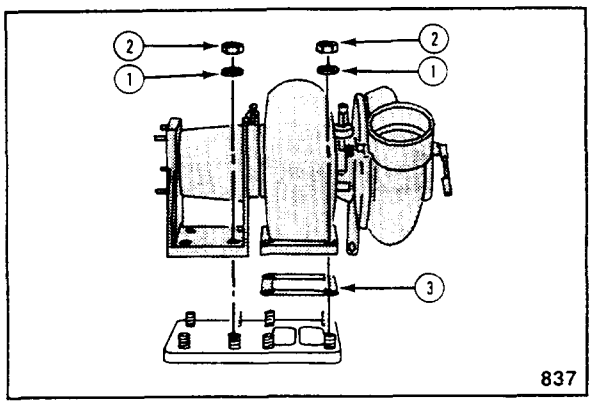


**Note:** Do not use anti-seize compound on the mounting studs or nuts.

5. Install the gasket (3) on the exhaust manifold. The word "OUT" must be towards the turbocharger.
6. Install the turbocharger and support on the manifold. Install the eight washers and nuts. Finger tighten the nuts ONLY.

   Check to make sure the turbocharger and the support fit flat on the manifold.
7. Remove the V band clamp. Check the fit between the turbocharger and the support. Both parts must touch all the way around. Reposition the parts if necessary.
8. Tighten the V band clamp.
   - AiResearch 6.8 N•m [60 in-lb]
   - Holset 13.6 N•m [120 in-lb]

   Tap the clamp with a mallet and retighten the clamp. Tighten the mounting nuts to 35 N•m [25 ft-lb].

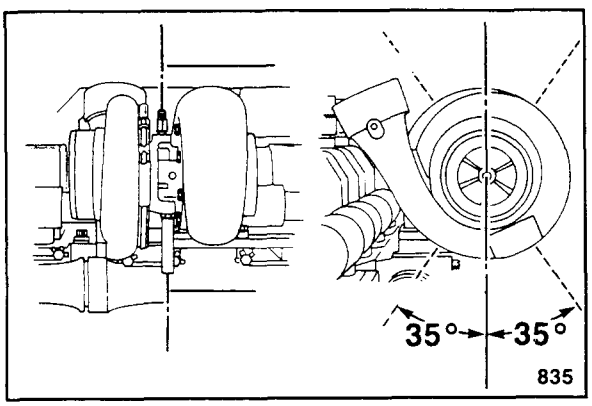


9. Check the oil drain tube angle. The turbocharger drain tube must be within 35° of vertical. Refer to Procedure 03-13 to adjust the angle.

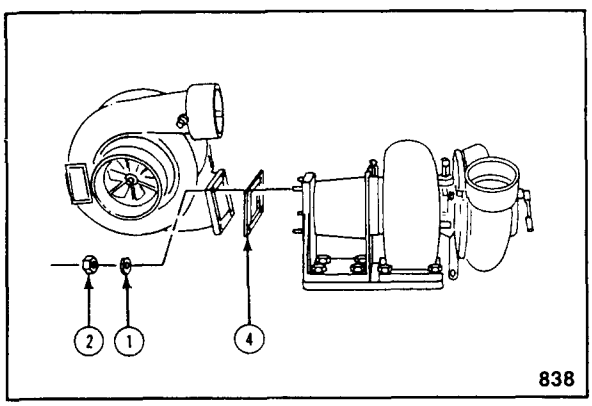


**Note:** Do not use anti-seize compound on the mounting studs or nuts.

10. Install the gasket (4) on the support assembly. The word "OUT" must be towards the low stage turbocharger.

    Install the low stage turbocharger, washers and nuts. Tighten the nuts to 35 N•m [25 ft-lb].

11. Check the oil drain tube angle. The turbocharger drain tube must be within 35° of vertical. Refer to Procedure 03-13 to adjust the angle.

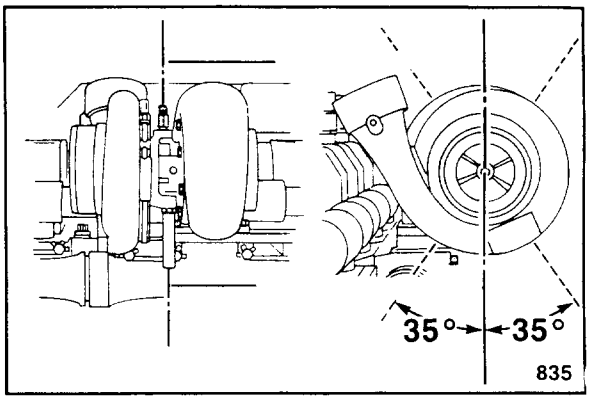


12. Install the gaskets, oil drain tubes, hoses, and the capscrews as shown. Tighten the capscrews to 45 N•m [35 ft-lb]. Tighten the clamps to 5.6 N•m [50 in-lb].

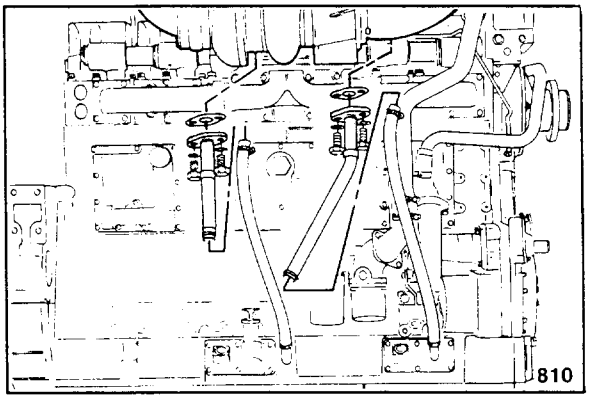


13. Pour 50 to 60 cc [2.0 to 3.0 ounces] of clean engine oil into the turbocharger oil supply fitting.

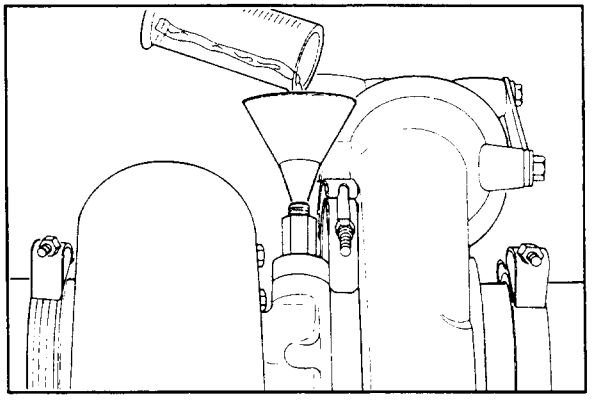

**Caution: These parts are a safety-related item. Be sure the parts are clamped correctly to prevent fretting.**

14. Connect the oil supply hose. Tighten the hose fitting as indicated below.

| | Torque Value | |
|---|---|---|
| AiResearch | 45 N•m | 35 ft-lb |
| Holset | 20 N•m | 15 ft-lb |

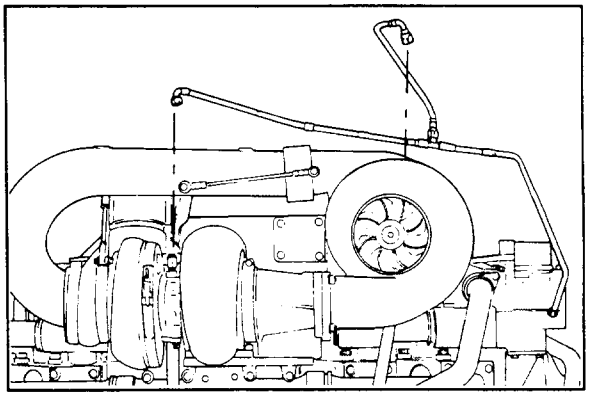

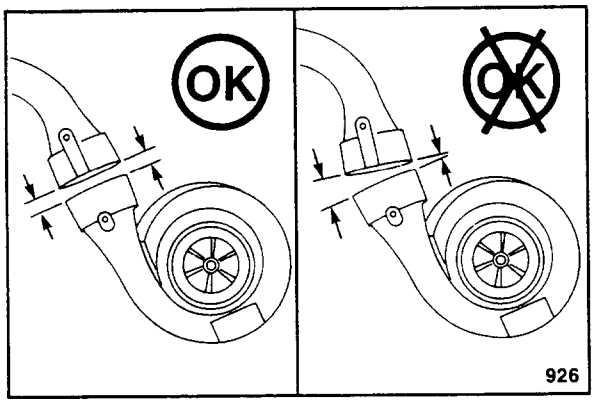


15. Check the air crossover to turbocharger alignment.
    a. Install the air crossover on the intake manifold or aftercooler.
    b. Look at the alignment between the crossover and the turbocharger compressor outlet.
    c. Remove the crossover and proceed with the assembly if the alignment is correct.
    d. Proceed to the next step to adjust the compressor housing if the alignment is incorrect.

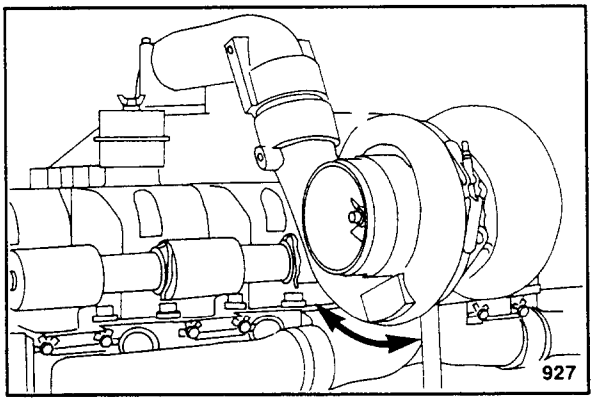


16. To adjust the turbocharger compressor housing alignment:
    a. Loosen the V band clamp.
    b. Turn the compressor housing to the correct alignment.
    c. Tighten the clamp:

| | |
|---|---|
| AiResearch | 6.8 N•m [60 in-lb] |
| Holset | 13.6 N•m [120 in-lb] |

    d. Tap the clamp with a mallet and retighten the clamp.

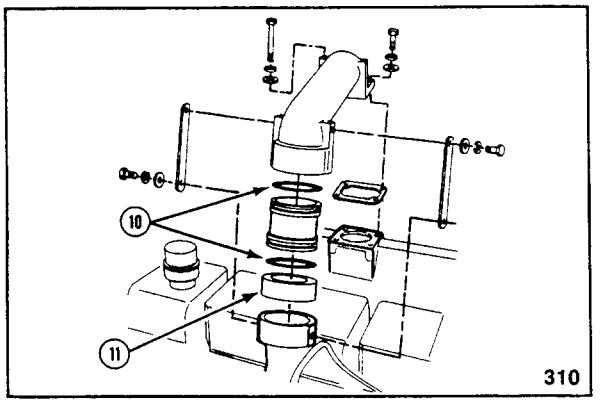


17. Install (o-ring connection) crossover
    a. Lubricate the o-rings with vegetable oil and install them on the tube.

       Install the tube in the crossover. Install the dust seal (11) on the tube.
    b. Install the gasket, crossover, and the capscrews. Tighten the capscrews to 40 N•m [30 ft-lb].

       Install the retainer straps, washers, and the capscrews. Tighten the capscrews to 20 N•m [15 ft-lb].

18. Install the transfer tube

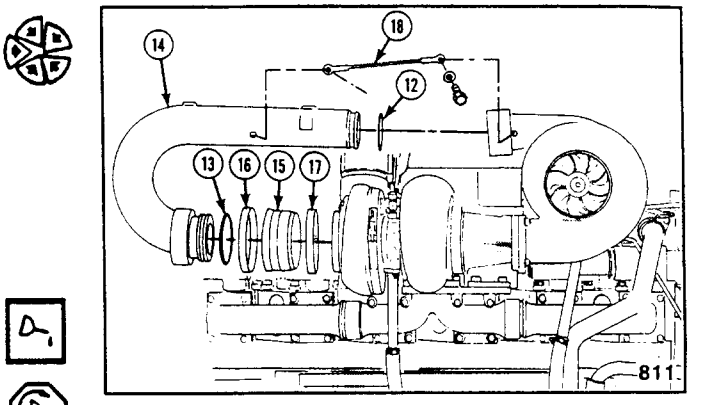


a. Use the transfer tube (14), without o-rings, to check the alignment. The tube must slide easily onto both turbochargers. Adjust the compressor housing of the low stage turbocharger to allow alignment if necessary. Refer to step number 16 for adjustment procedures.

b. Slide the dust seal (15), the clamps (16), and (17), on the pipe (14).

c. Lubricate the o-rings with vegetable oil and install them on the pipe (14).

d. Install the pipe into the turbochargers. Install the dust seal and clamps. Tighten the clamps to 5.5 N•m [50 in-lb].

e. Install the two adjusting links(15), washers, and the capscrews. Tighten the capscrews to 20 N•m [15 ft-lb].

19. Connect the exhaust piping to the turbocharger. Tighten the V band clamp to 4.0 N•m [35 in-lb].

**Note:** Some engines contain a flanged exhaust connection. Tighten the capscrews to 45 N•m [35 ft-lb].

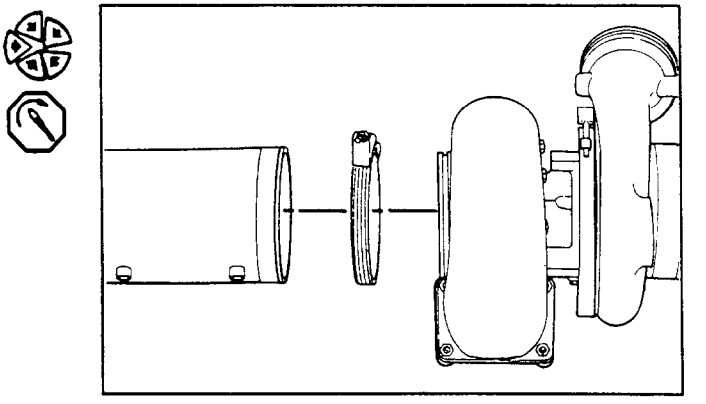

20. Connect the inlet piping to the turbocharger. Tighten the clamps to 8.4 N•m [75 in-lb].

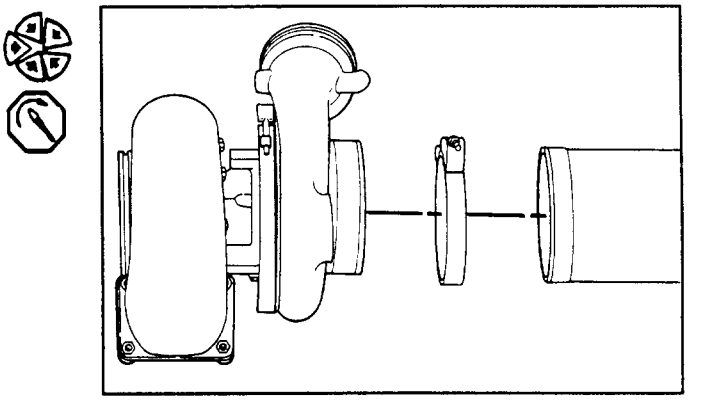

# Exhaust Manifold - Replace (03-15)

## Remove

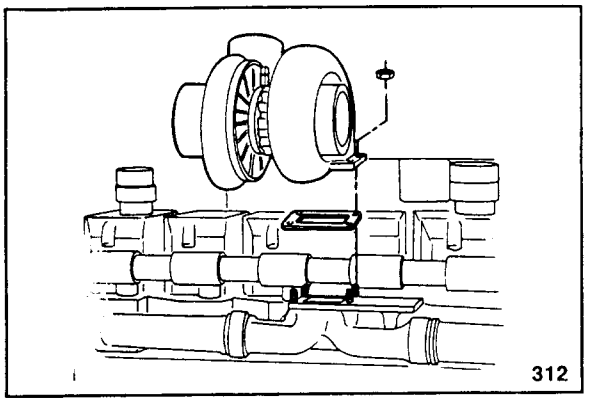


1. Remove the turbochargers. Refer to Procedure 03-13 (KT/KTA) or 03-14 (KTTA).

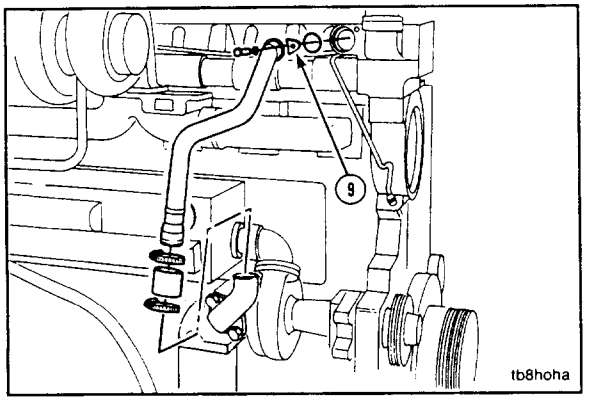


2. Remove the water by-pass clamp (9). Loosen both clamps. Remove the water by-pass tube.

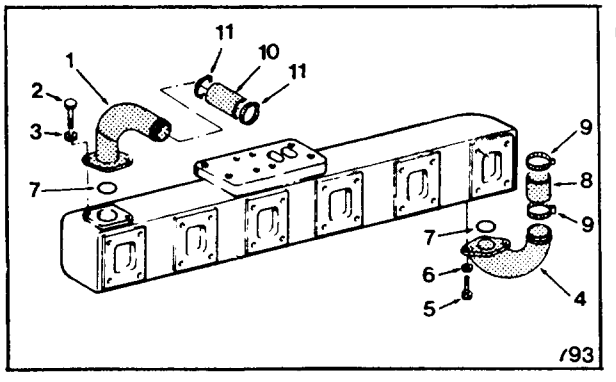


3. Remove the water transfer connections (1) and (4) from the wet exhaust manifold. Remove and discard the two o-rings (7), and hoses (8), (10).

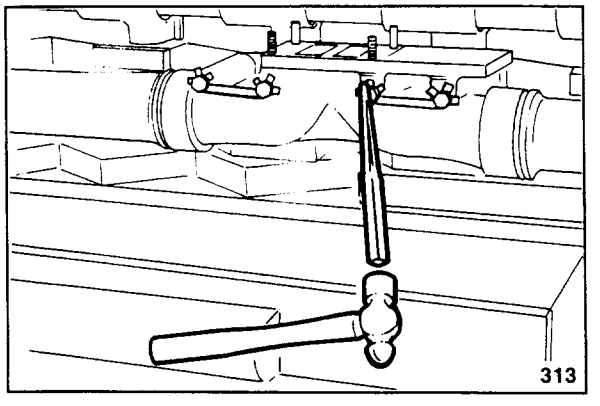


4. Use a drift and hammer to bend the lockplate tabs away from the capscrew heads.

**Note:** All engines do not contain this type of lockplate. Some engines contain a lockplate that snaps over the capscrew head. Some engines have locking capscrews that do not require lockplates.

5. Use two [7/16-14x5] inch guide studs (12). Remove four capscrews and two lockplates as shown. Install the guide studs as shown.

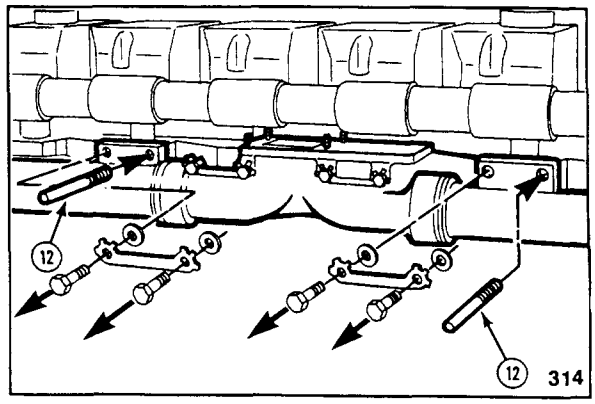


**Caution: This assembly weighs more than 23 kg [50 lb]. Personal injury can result.**

6. Remove the remaining capscrews and lockplates. Remove the exhaust manifold and the gaskets. Discard the lockplates and gaskets.

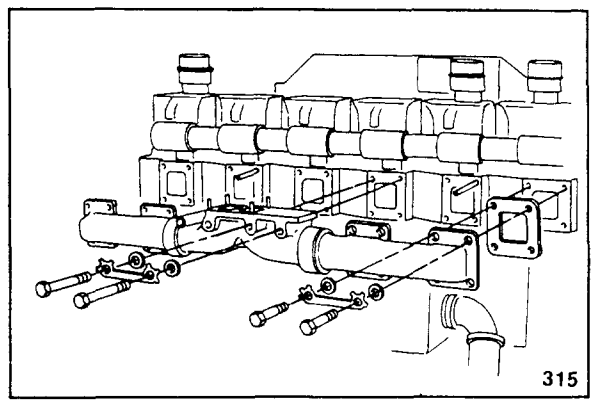


## Check For Reuse

1. Clean and check the exhaust manifold for reuse. Refer to Procedure 03-16.

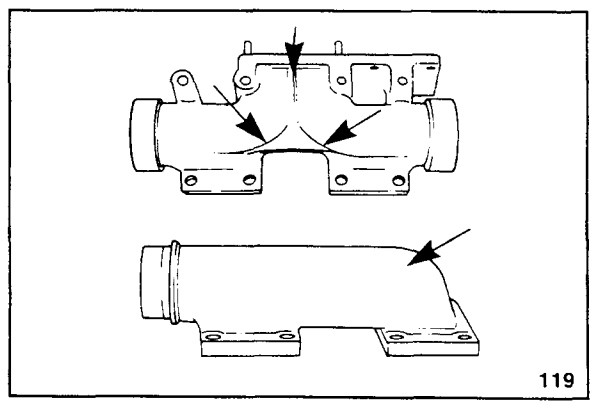

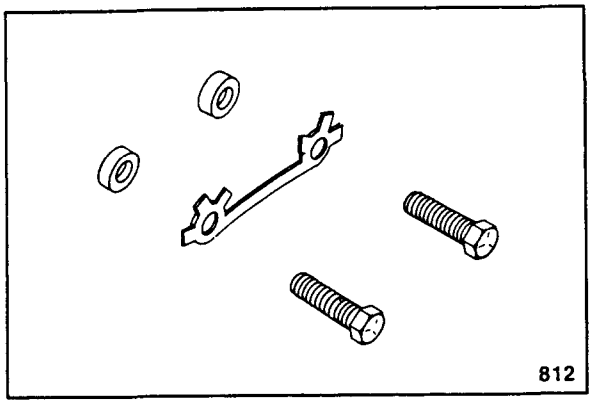


## Install

**Note:** The procedure for the installation of both wet and dry exhaust manifolds is the same. Parts used ONLY with the wet type manifold are covered later in the procedure.

**Note:** Three styles of fasteners are used on K19 exhaust manifolds.

1. The internal lockplate style, consists of:
   - Grade 5, common hexagon capscrews
   - Lockplates, internal
   - Washers with a rounded surface on one side.

**Note:** Internal lockplate fasteners are used on all K19 engines, except the KTA19-C with CPL of 351, and the KTTA engines.

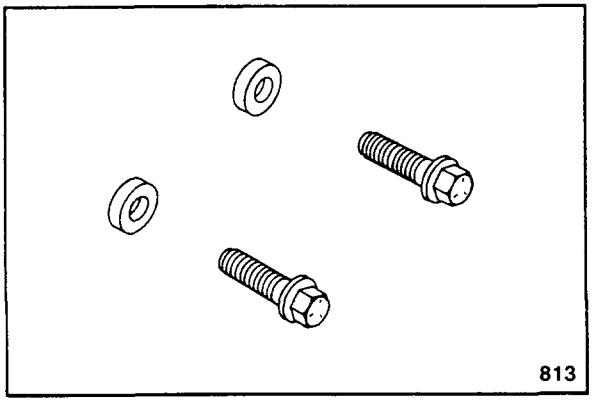


2. The self-locking capscrews, consist of:
   - Self-locking flange capscrews
   - Hardened washers, flat on both sides.

**Note:** Self-locking fasteners are used on some KTA19-C engines with a CPL of 351, and some KTTA engines.

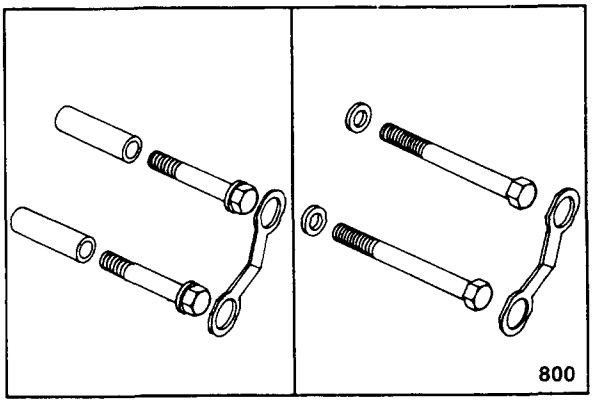


3. The external lockplate style consists of:
   - High strength capscrews
   - Spacers or washers
   - Lockplates, external.

**Note:** External lockplate fasteners are used on some KTA19-C engines with a CPL of 351, and some KTTA engines.

4. Install the same guide studs used during removal.
5. Use contact adhesive and attach the gasket on the cylinder head exhaust ports. The word "OUT" on the gasket must face the exhaust manifold.

   Install the exhaust manifold.

Note: Some gaskets are metal and some are a composite material. Do not mix metal and composite gaskets on the engine.

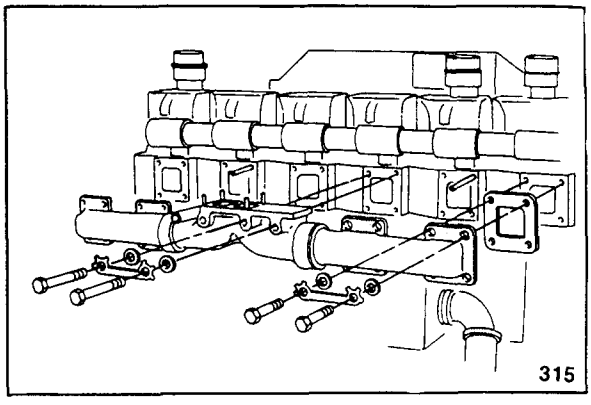


6. Make sure the fasteners are the correct style. Apply an anti-seize compound on the capscrew threads.

   Install the capscrews. Remove the two guide studs and install the remaining capscrews.

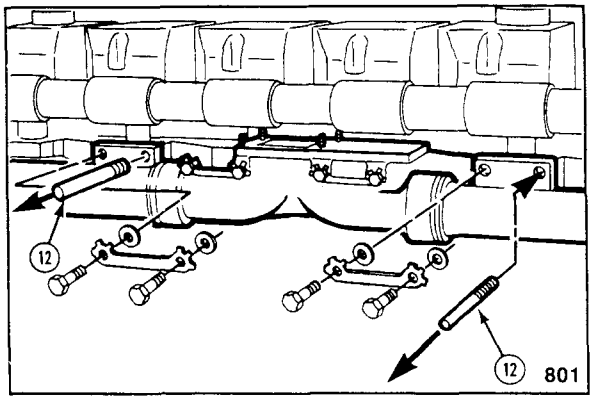


7. Tighten the capscrews in the sequence shown and to the values indicated below.

| Exhaust Manifold Torque Values (with metal gaskets) | | |
|---|---|---|
| N•m | | ft-lb |
| 60 | Internal lockplate | 45 |
| 45 | Self-locking capscrew | 35 |

| Exhaust Manifold Torque Values (with composite gaskets) | | |
|---|---|---|
| N•m | | ft-lb |
| 55 | Internal lockplate | 40 |
| 45 | External lockplate | 35 |

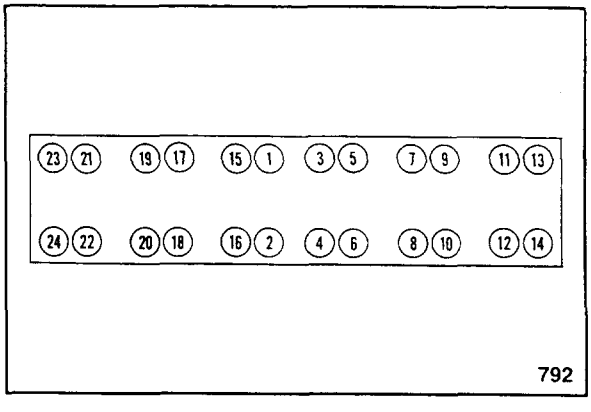


8. Use a hammer and drift. Bend one tab of the internal lockplate over each capscrew head.

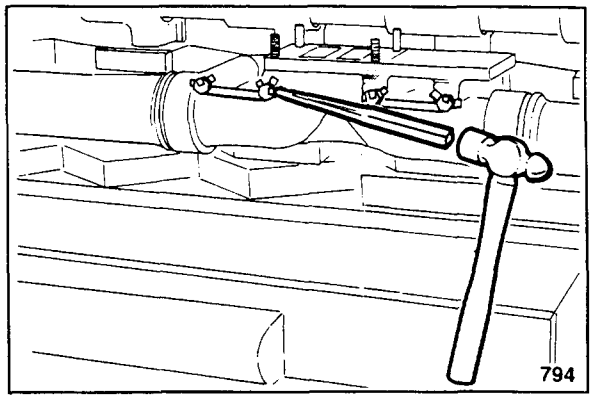

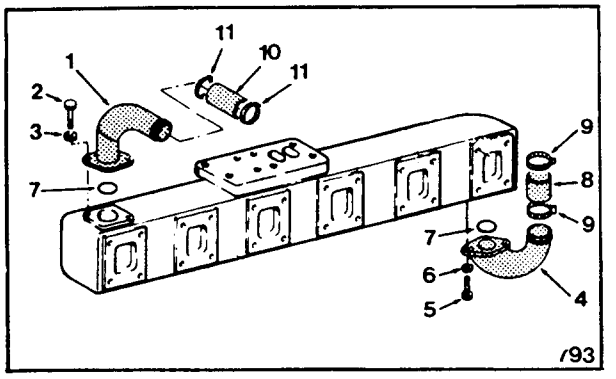


9. Install wet manifold water tubes.
   a. Slide the hose (10) and hose clamps (11) on the front water connection (1).Install the seal ring (7) in the flange. Install the front water connection, washers, and capscrews. Tighten the capscrews to 45 N•m [35ft-lb].
   b. Connect the front water connection hose to the transfer tube between cylinders No. 1 and No. 2. Tighten the clamps to 5.6 N•m [50 in-lb].
   c. Slide the hose (8) and hose clamps (9) on the rear water connection (4). Install the seal ring (7) in the flange. Install the rear water connection, washers, and capscrews. Tighten the capscrews to 45 N•m [35 ft-lb].
   d. Connect the rear water connection hose to the transfer tube between cylinders No. 5 and No. 6. Tighten the clamps to 5.6 N•m [50 in-lb].

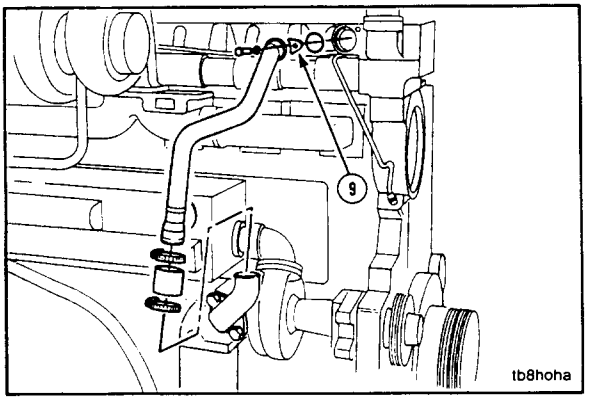


10. Lubricate the o-ring with vegetable oil and install it in the water bypass tube.

**Note:** The raised lip on the retainer (9) must point away from the thermostat housing.

11. Install the water bypass tube, retainer, and capscrew. Tighten the capscrew to 45 N•m [35 ft-lb]. Tighten the clamps to 5.6 N•m [50 in-lb].

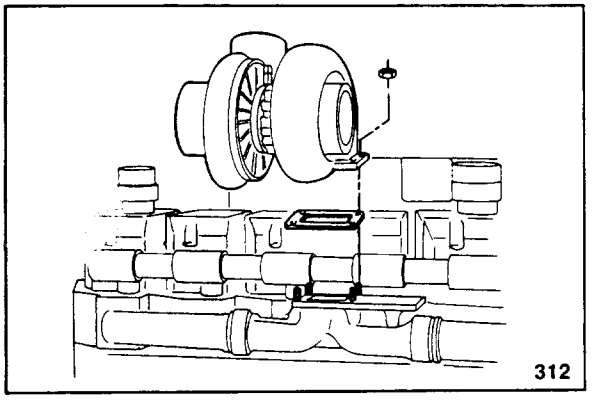


12. Install the turbochargers. Refer to Procedure 03-14 (KT/KTA) or 03-13 (KTTA).

# Exhaust Manifold - Check (03-16)

## Remove

1. Use 240 grit emery cloth and clean all of the exhaust manifold gasket surfaces.

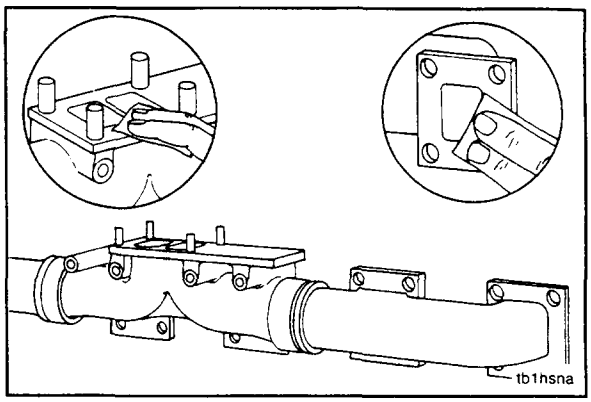


2. Use a mallet and remove the end section from the exhaust manifold center section.

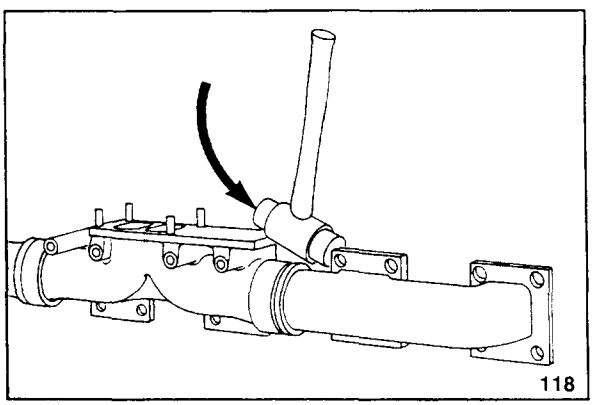


## Check for Reuse

1. Use steam or solvent and clean the manifold. Use a wire brush. Clean the sealing joint inside and outside diameters to remove any scale that has accumulated.
2. Check for cracks in the areas shown. Check the turbocharger mounting studs for damage.

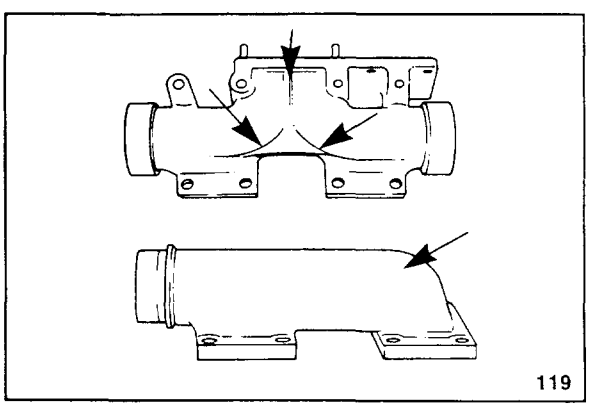

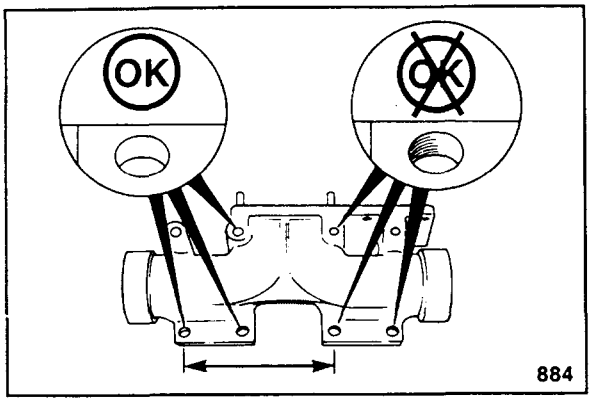


3. Check the capscrew holes in the center section for damage.

**Note:** The manifold has been subjected to high temperatures if the capscrew threads are visible on the side of the capscrew holes. High temperature can cause the manifold to shrink.

4. Measure the center-to-center distance between the capscrew holes to determine if the manifold is too short.

| Exhaust Manifold Capscrew Holes | | |
|---|---|---|
| mm | | in |
| 191.5 | MIN | 7.54 |
| 193.5 | MAX | 7.62 |

## Install

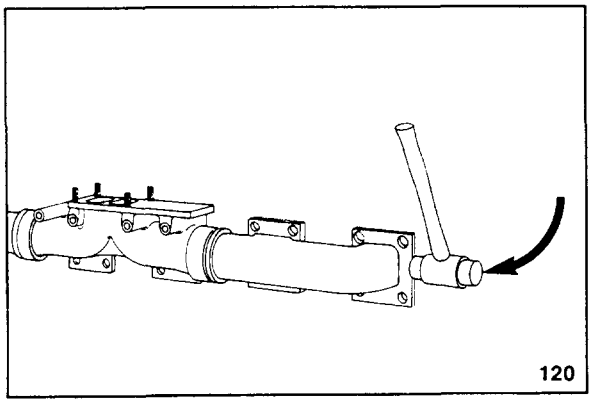


1. Use an anti-seize compound. Lubicate the O.D. of the center section in the area that slides into the center section.
2. Use a mallet and drive the end section into the center section.

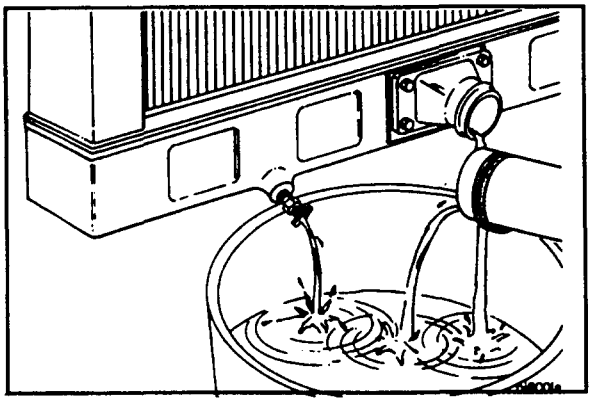

# Aftercooler - Replace (03-17)

## Remove

1. Open the draincock on the bottom of the radiator and remove the lower radiator hose to drain the cooling system.

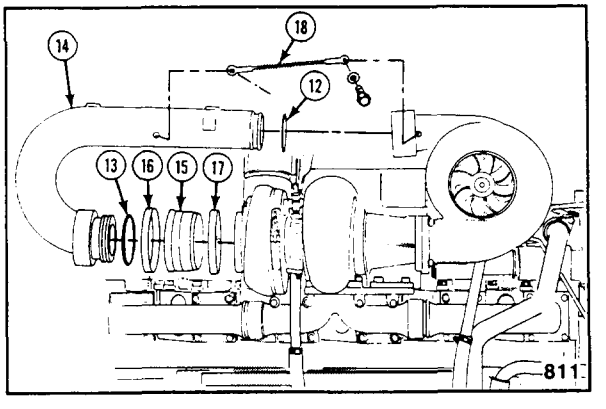


2. Remove the air transfer tube, between the low stage and high stage turbocharger compressor housings.

   Remove the two retaining straps (18). Loosen the hose clamps (16) and (17).

   Remove the air transfer tube (14). Remove and discard the o-rings (10) and the dust seal (11).

3. Remove the two retaining straps and four capscrews from the crossover.
4. Remove the air crossover assembly. Remove and discard the o-rings, and dust seal.

**Note:** Some engines contain a hose and clamps in place of the o-ring and dust seal.

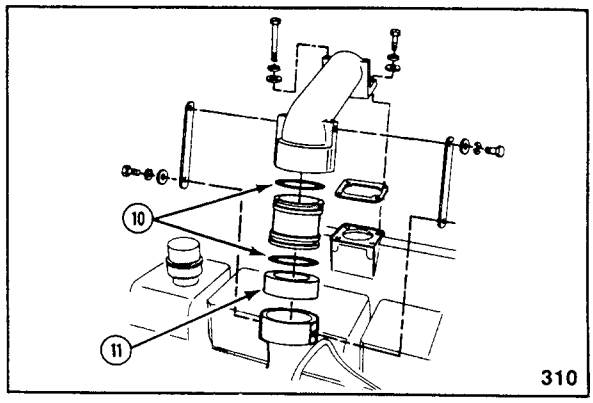


5. Loosen the two hose clamps and remove the outlet hose (8).

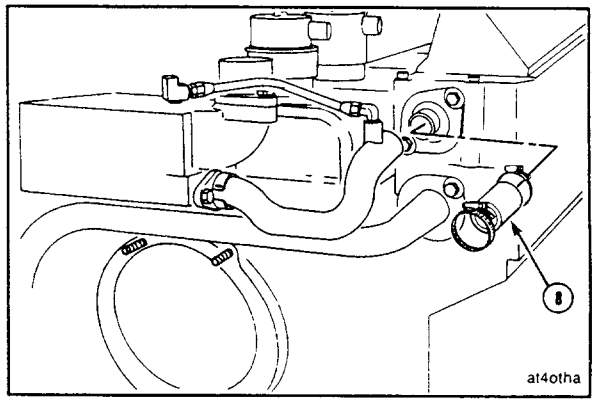


6. Loosen the two hose clamps and remove the inlet hose.

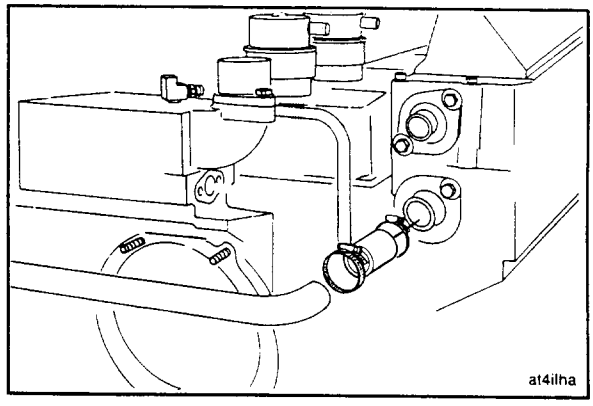


7. Remove the air compressor air inlet connection. Remove and discard the hose.
8. Loosen the fuel tubing nuts at the fuel junction block on the fuel manifold. Remove the fuel tubing mounting clamp and the fuel tubes. Remove and discard the grommets.

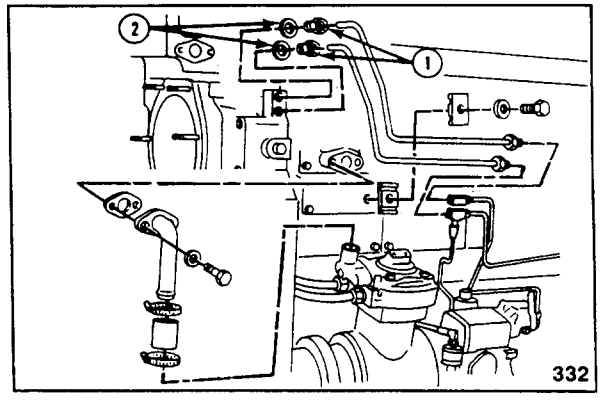

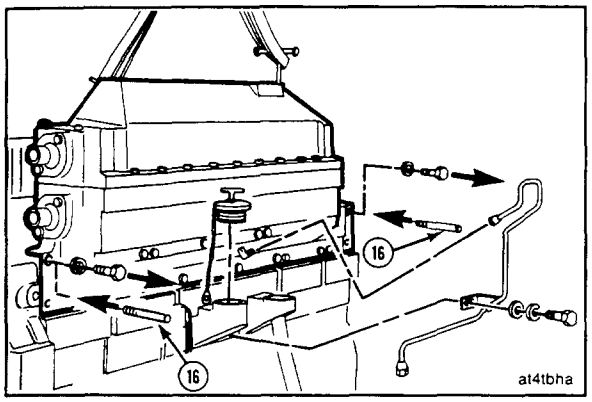


9. Remove the AFC air tube and oil filler cap.

   If the engine contains a crankcase breather in one of the cam follower covers, remove the cam follower cover.

**Caution: This assembly weighs more than 23 kg [50 lb]. Personal injury can result.**

10. Remove two mounting capscrews and install two [3/8-16] guide studs (16).

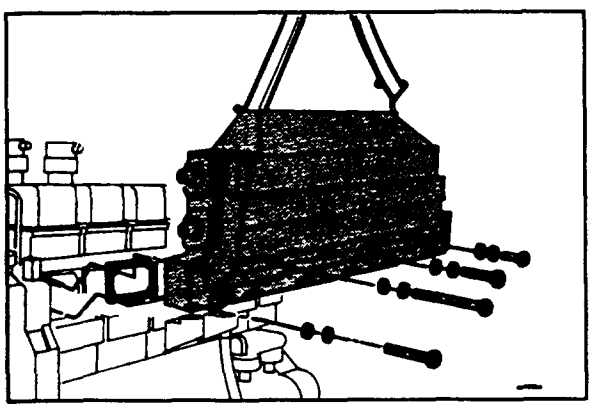

11. Use a hoist, two tee handles, and a lifting sling. Attach the tee handles, sling, and hoist. Raise the hoist until there is tension on the sling.
12. Remove the remaining capscrews and the aftercooler assembly. Remove and discard the gaskets.

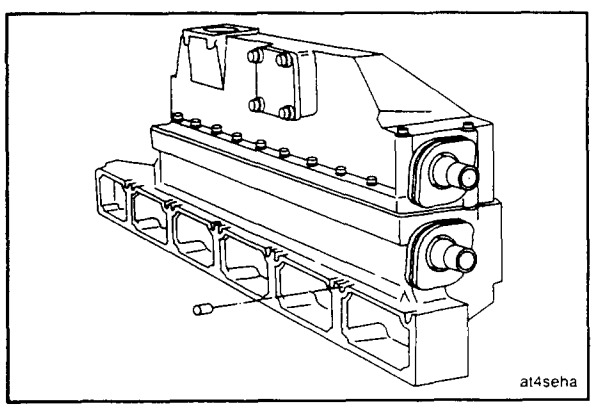


13. Remove and discard the aftercooler bolt seals from the aftercooler housing.

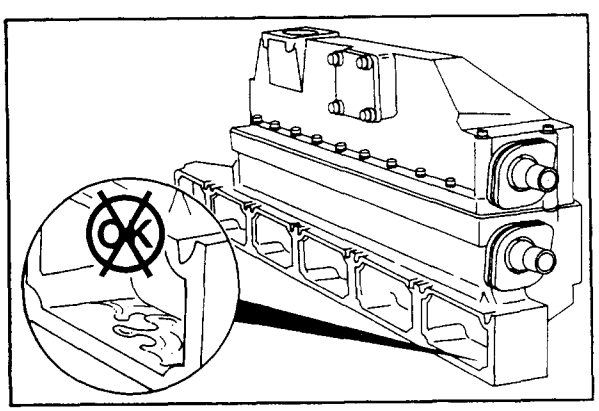

## Check For Reuse

1. Clean and check the aftercooler for reuse. Look into the cylinder head ports and into the aftercooler for indications of coolant leakage. Refer to Procedure 03-19 to pressure test the element.

## Install

1. Install the bolt seals in the aftercooler housing.

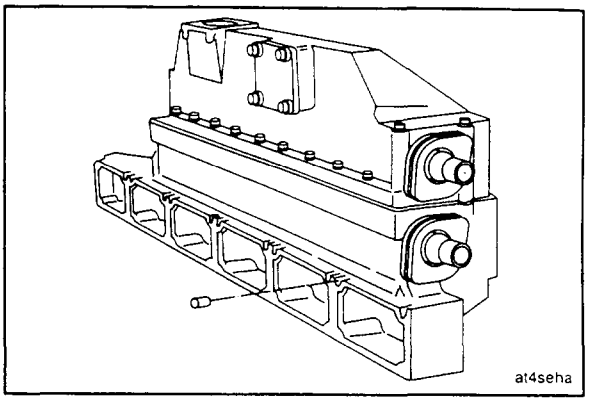


**Caution: This assembly weighs more than 23 kg [50 lb]. Personal injury can result.**

**Note:** Use guide studs long enough to protrude beyond the installed part.

2. Install 12 guide studs in the upper row of capscrew holes in the cylinder heads.
3. Install the gaskets on the studs with the raised bead on the gasket toward the cylinder head.

**Note:** The installation process for an intake manifold, is the same as shown here for the aftercooler.

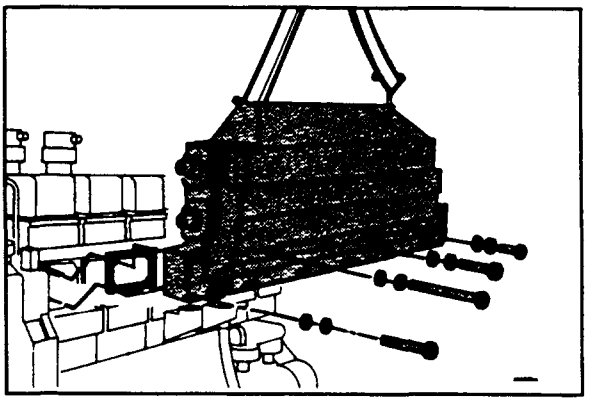

4. Install the aftercooler and the bottom row of capscrews. Tighten the capscrews ONLY tight enough to hold the part.
5. Remove the guide studs and install the top row of capscrews.

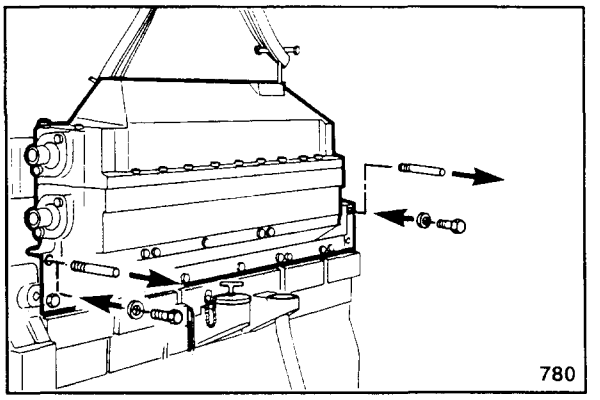


6. Use the sequence shown, and the steps and values indicated below to tighten the capscrews.

| Intake Manifold Torque Sequence | | |
|---|---|---|
| N•m | Step | ft-lb |
| 25 | 1 | 20 |
| 45 | 2 | 35 |

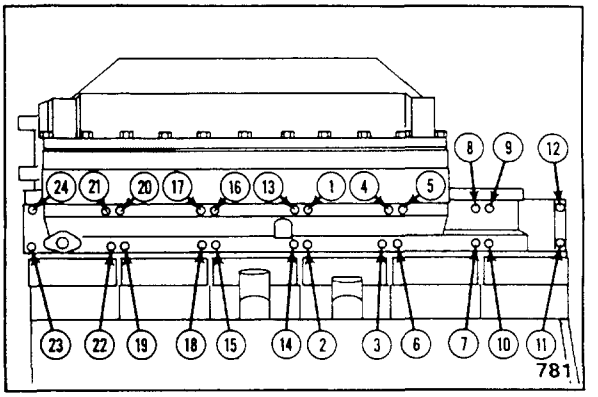

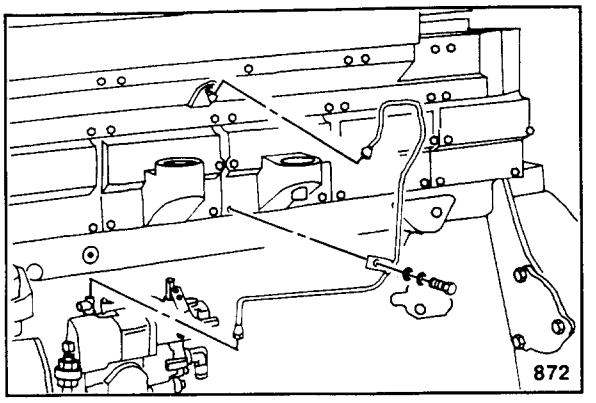


**Note:** The AFC assembly is not used on all fuel pumps.

7. Connect the tube to the fittings on the intake manifold and fuel pump. Install the tube clip and tighten the capscrew to 45 N•m [35 ft-lb].

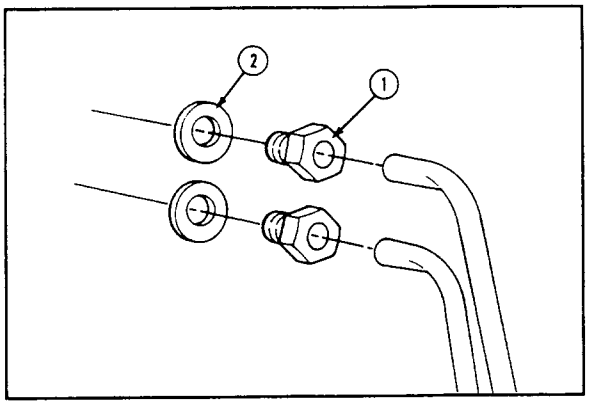


**Caution: The tube seals (2) must be installed on the tubes before the tubes are inserted into the junction block.**

**Note:** The fuel pressure tube is the upper tube. The fuel drain tube is the lower tube.

8. Install the tube nut (1) and the seals (2) on the fuel tubes.

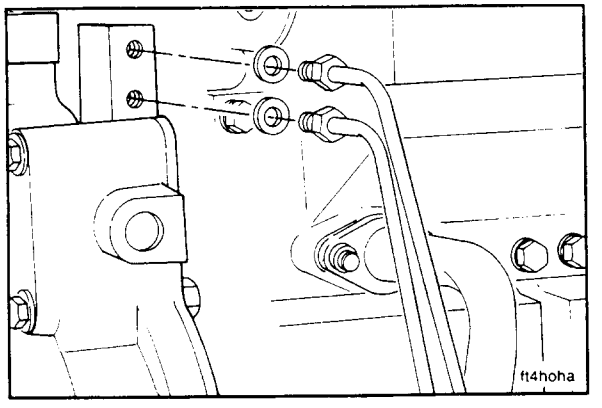


9. Connect, but do not tighten, the fuel tubes to those already installed. Insert the fuel tubes into the junction block.

**Caution: Do not overtighten the tube nuts at the junction block.**

10. Finger-tighten the tube nuts in the junction block. Turn the nuts an additional three-fourths to one turn past finger tight.

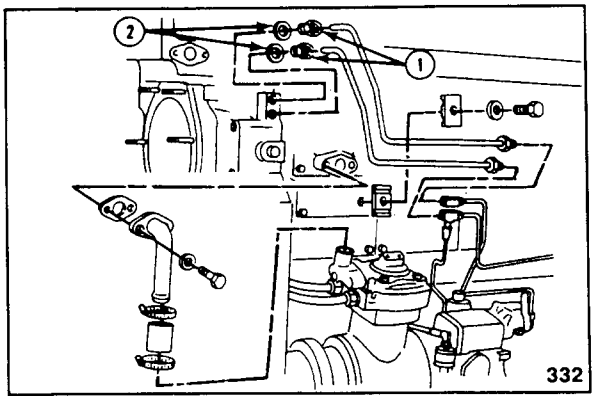


11. Tighten the tubing nuts at their connection with the other tubes.
12. Install the capscrew and tighten the capscrew to 45 N•m [35 ft-lb].
13. Install the parts for the air compressor air inlet connection. Tighten the capscrew to 45 N•m [35 ft-lb].Tighten the clamp to 5.6 N•m [50 in-lb].

14. Connect the inlet hose. Tighten the clamps to 5.6 N•m [50 in-lb].

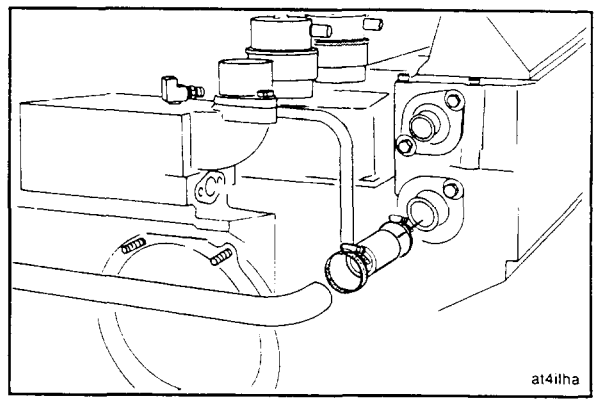


15. Connect the water outlet hose. Tighten the clamps to 5.6 N•m [50 in-lb].

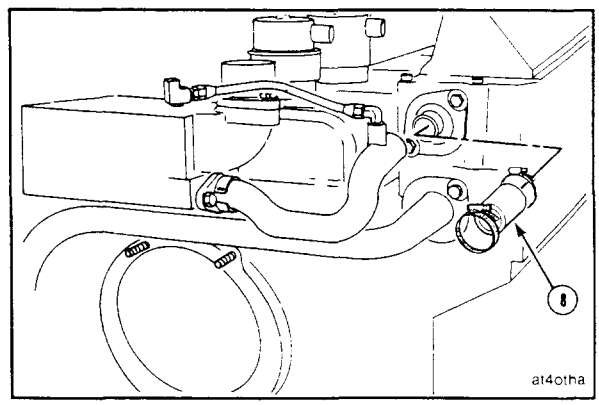


**Install (hose connection) crossover**

16. Install the hose (11) and two hose clamps (10) on the air crossover tube.
17. Install the air crossover, slide the hose down over the turbocharger outlet. Install the gasket and capscrews. Tighten the capscrews to 40 N•m [30 ft-lb]. Tighten the clamps to 8.4 N•m [75 in-lb].

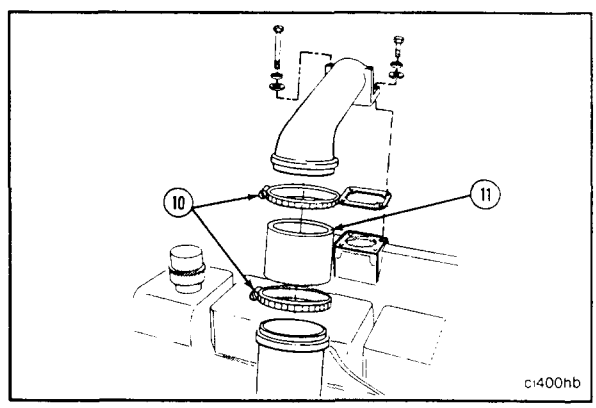


**Install (o-ring connection) crossover**

18. Lubricate the o-rings with vegetable oil and install them on the tube.
19. Install the tube in the crossover. Install the dust seal (11) on the tube.
20. Install the gasket, crossover, and the capscrews. Tighten the capscrews to 40 N•m [30 ft-lb].
21. Install the retainer straps, washers, and the capscrews. Tighten the capscrews to 20 N•m [15 ft-lb].

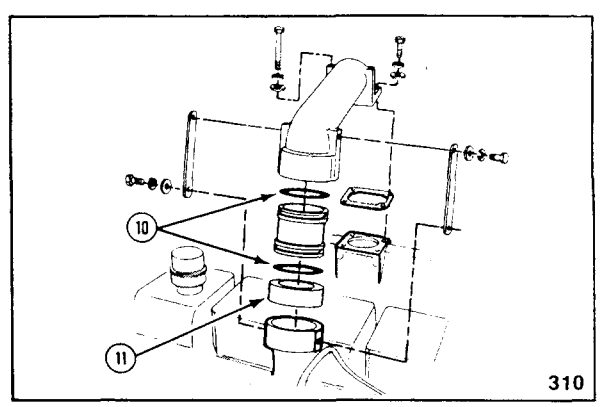

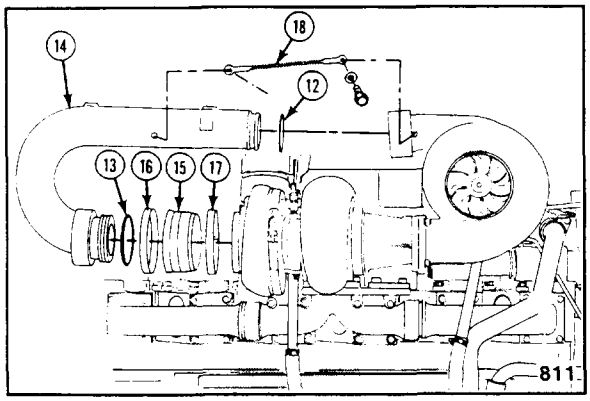


22. Use the transfer tube (14), without o-rings, to check the alignment. The tube must slide easily into both turbochargers. Adjust the compressor housing of the low stage turbocharger to allow alignment if necessary. Refer to Procedure 03-14 for adjustment procedures.

23. Lubricate the o-rings with vegetable oil. Install the o-rings on the tube. Install the pipe into the turbochargers. Put the dust seal into position and install the clamps. Tighten the clamps to 8.4 N•m [75 in-lb].

24. Install the two adjusting links (18), washers, and the capscrews. Tighten the capscrews to 20 N•m [15 ft-lb].

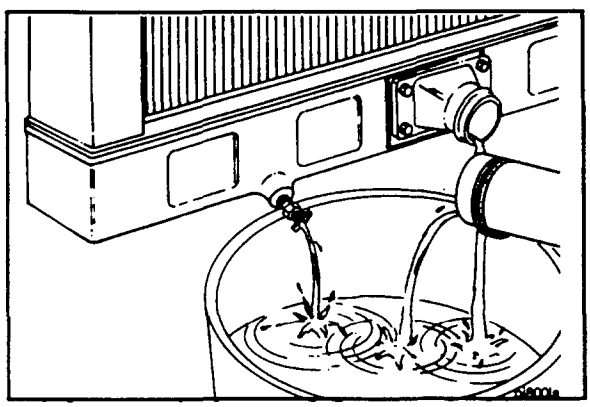

# Aftercooler Element - Replace (03-18)

## Remove

1. Open the draincock on the bottom of the radiator and remove the lower radiator hose to drain the cooling system.

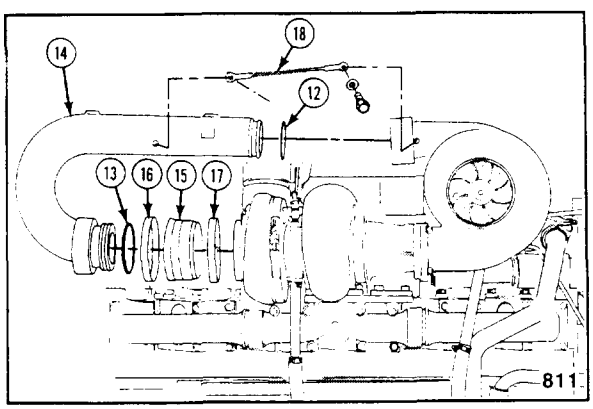


2. Remove the air transfer tube, between the low stage and high stage turbocharger compressor housings.

   Remove the two retaining straps (18). Loosen the hose clamps (16) and (17).

   Remove the air transfer tube (14). Remove and discard the o-rings (10) and the dust seal (11).

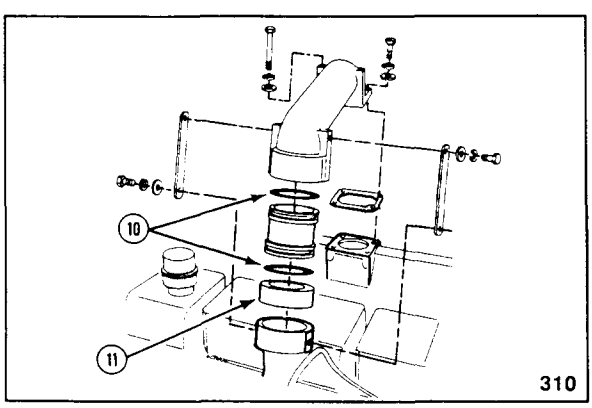


3. Remove the two retaining straps and four capscrews from the crossover.

4. Remove the air crossover assembly. Remove and discard the o-rings, and dust seal.

**Note:** Some engines contain a hose and clamps in place of the o-ring and dust seal.

5. Loosen the two hose clamps and remove the outlet hose (8).

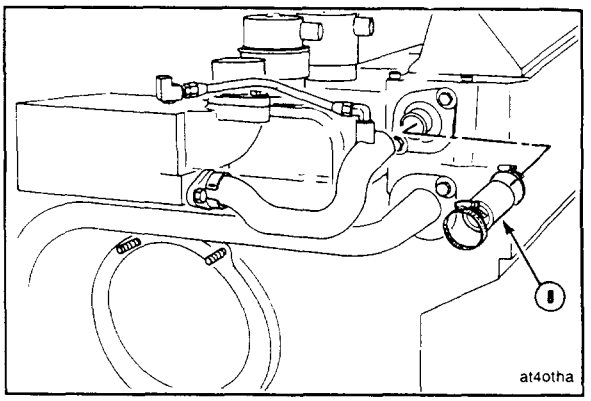


6. Loosen the two hose clamps and remove the inlet hose.

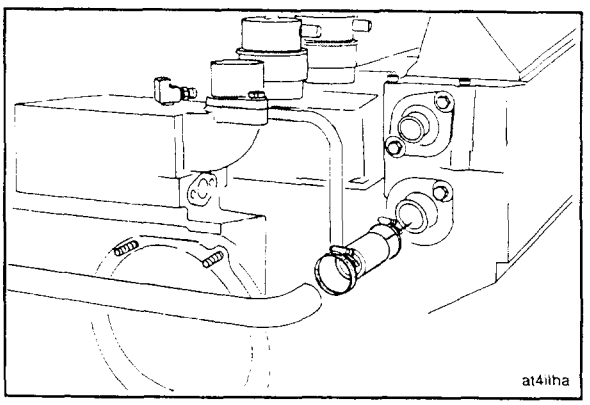


7. Remove the capscrews, seal retainer (3), gaskets (4), and seals (5). Discard the seals and gaskets.

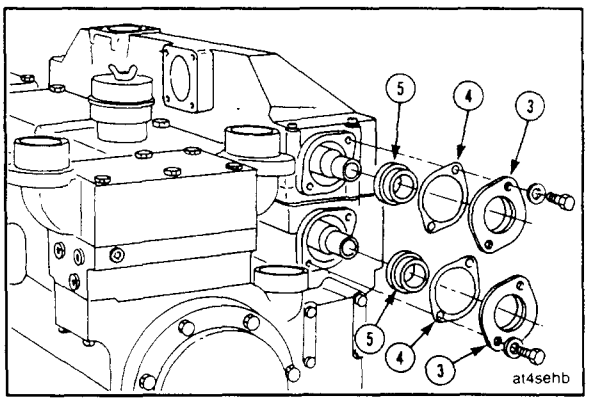


8. Remove the aftercooler cover capscrews and cover.

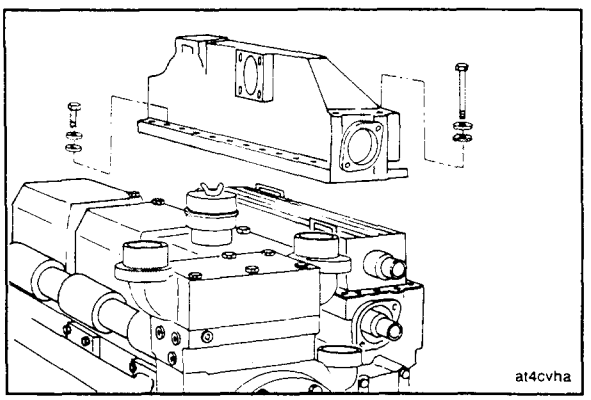

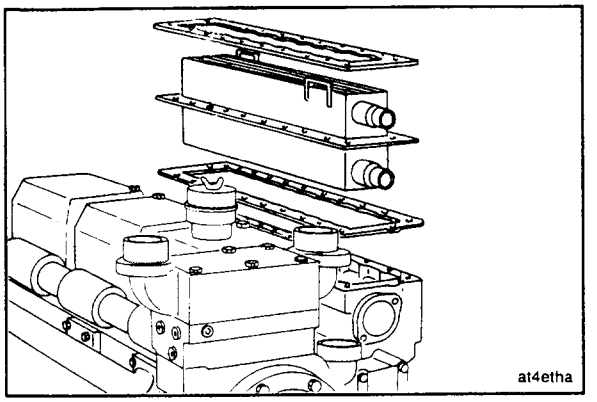


9. Remove the element and gaskets.

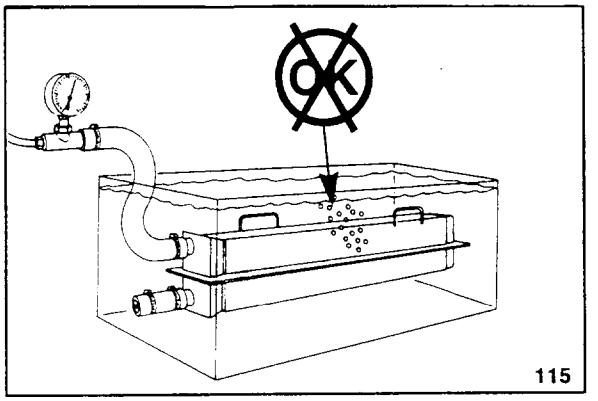


## Check For Reuse

1. Clean and check the element for reuse. Refer to Procedure 03-19 to check the element.

**Note:** Heating the tank water to 50°C [120°F] will improve the test results.

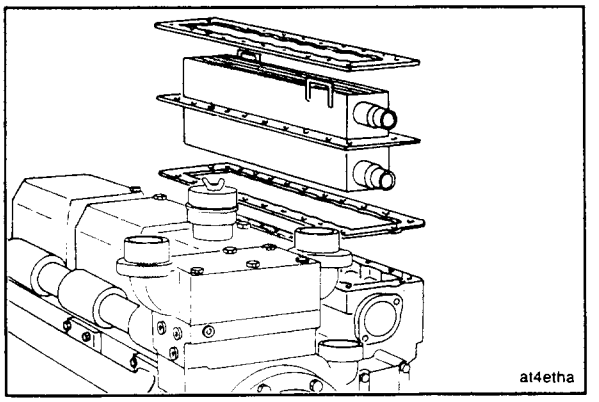


## Install

1. Install the element and two gaskets.

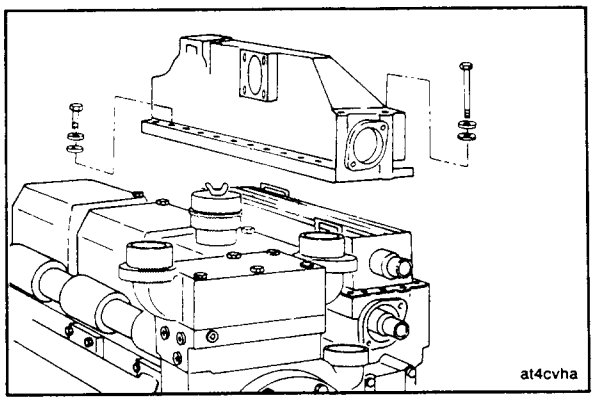


2. Install the cover and 24 capscrews.

   Do not tighten the capscrews until the inlet and outlet seals are installed.

3. Lubricate the seal (5) with engine oil. Install the seal on the retainer (3).
4. Lubricate the O.D. of the water bosses on the aftercooler element with engine oil.
5. Slide the gasket (4) on the water bosses. Slide the seal and the retainer on the tube. Install the capscrews and tighten the capscrews to 35 N•m [25 ft-lb].

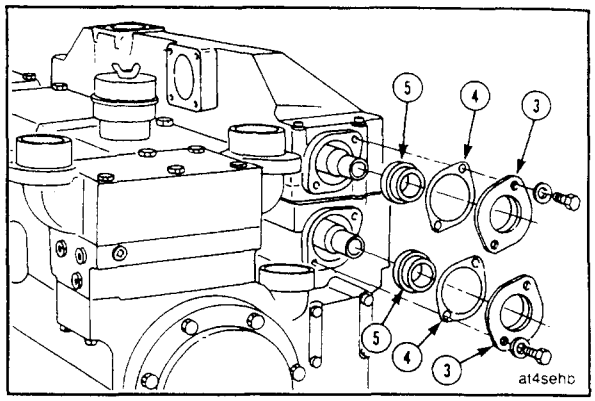


6. Tighten the 24 cover capscrews to 35 N•m [25 ft-lb].
7. Tighten the 24 cover capscrews to 49 N•m [36 ft-lb].

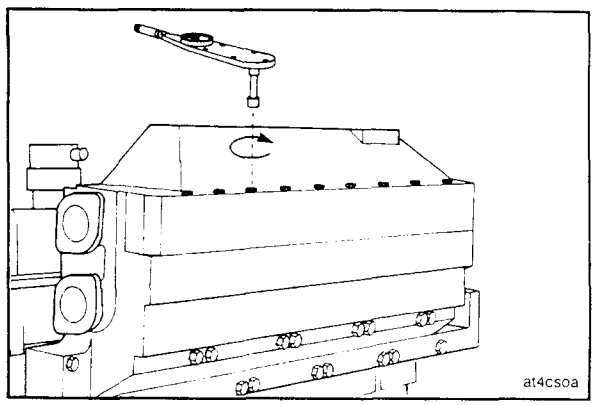


8. Connect the inlet hose. Tighten the clamps to 5.6 N•m [50 in-lb].

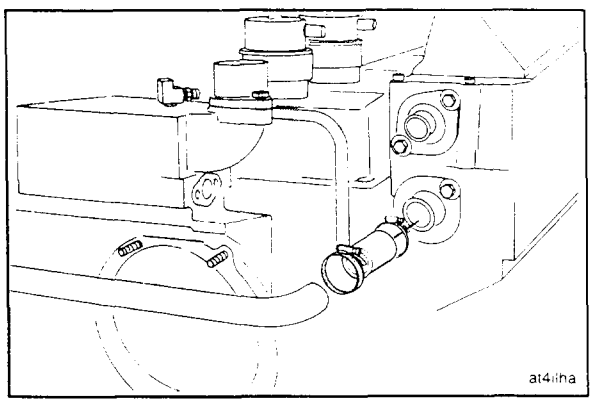


9. Connect the water outlet hose. Tighten the clamps to 5.6 N•m [50 in-lb].

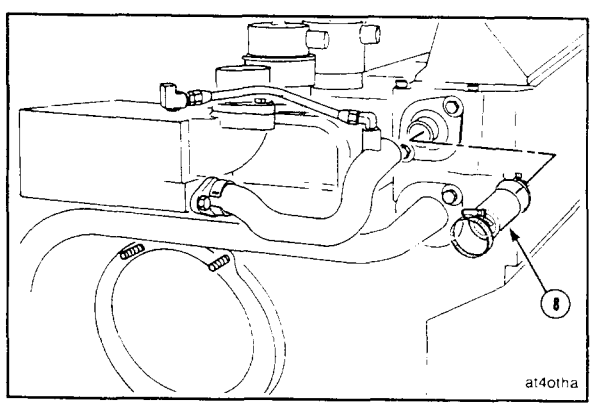

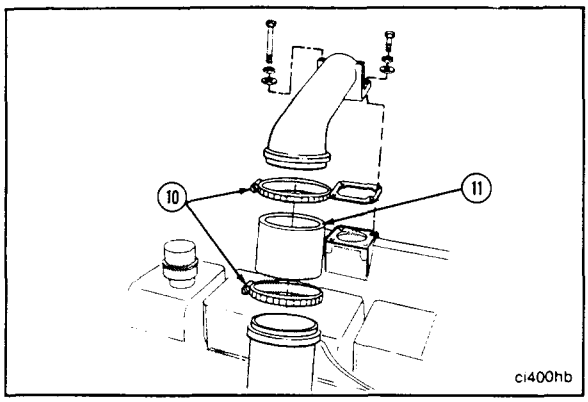


**Install (hose connection) crossover**

10. Install the hose (11) and two hose clamps (10) on the air crossover tube.
11. Install the air crossover, slide the hose down over the turbocharger outlet. Install the gasket and capscrews. Tighten the capscrews to 40 N•m [30 ft-lb]. Tighten the clamps to 8.4 N•m [75 in-lb].

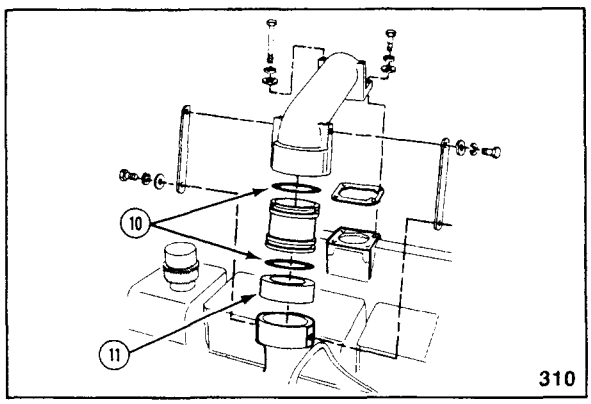


**Install (o-ring connection) crossover**

12. Lubricate the o-rings with vegetable oil and install them on the tube.
13. Install the tube in the crossover. Install the dust seal (11) on the tube.
14. Install the gasket, crossover, and the capscrews. Tighten the capscrews to 40 N•m [30 ft-lb].
15. Install the retainer straps, washers, and the capscrews. Tighten the capscrews to 20 N•m [15 ft-lb].

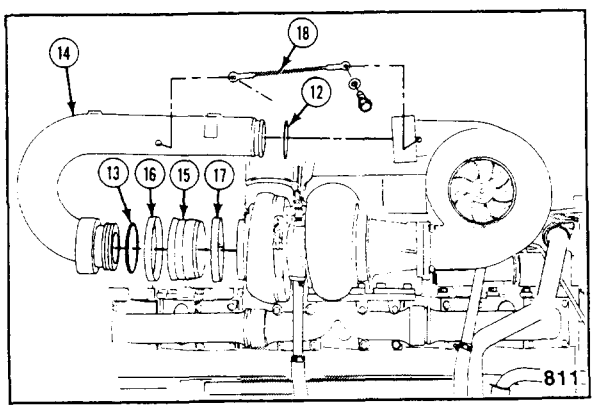


16. Use the transfer tube (14), without o-rings, to check the alignment. The tube must slide easily into both turbochargers. Adjust the compressor housing of the low stage turbocharger to allow alignment if necessary. Refer to Procedure 03-14 for adjustment procedures.
17. Lubricate the o-rings with vegetable oil. Install the o-rings on the tube. Install the pipe into the turbochargers. Put the dust seal into position and install the clamps. Tighten the clamps to 8.4 N•m [75 in-lb].
18. Install the two adjusting links (18), washers, and the capscrews. Tighten the capscrews to 20 N•m [15 ft-lb].

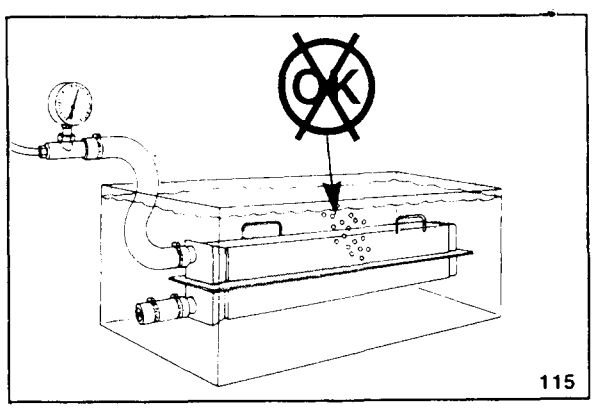


## Aftercooler Element - Test (03-19)

1. Use a hose plugged with a pipe plug. Plug one water tube as shown. Attach an air line and gauge to the remaining tube.
2. Apply 415 kPa [60 psi] air pressure and check for leaks.

**Note:** Heating the tank water to 50°C [120°F] will improve the test results.

# Intake Manifold Pressure - Check (03-20)

1. Install a 0-2030 mm-Hg [0-80 in-Hg] manometer (or gauge) in the [3/8 inch] pipe plug hole in the aftercooler housing.

**Note:** Install a tee fitting in the AFC air tube (1) if the engine has a cold starting aid.

**Note:** Do not drill and tap a hole in the aftercooler cover. A faulty reading can result if the aftercooler core is leaking.

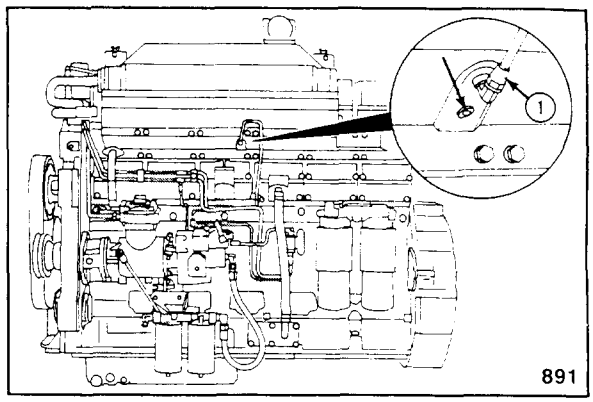


2. Read the fuel pump code (3) listed on the fuel pump data plate.

   Fuel pump codes are contained in the following bulletins:

| | |
|---|---|
| 3379068 | 1970-1975 |
| 3379182 | 1976-1982 |
| 3379352 | 1983-present |

   Refer to Section 12 for ordering information.

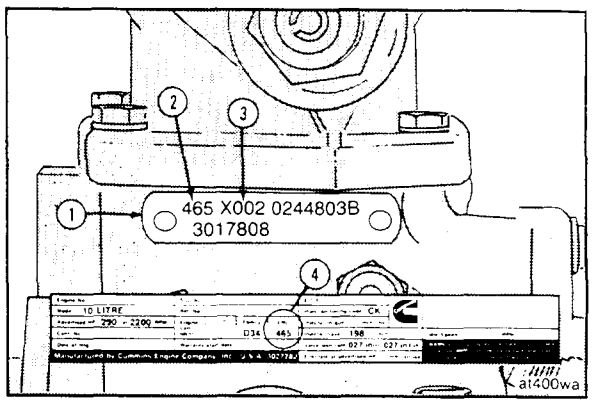


3. Refer to the fuel pump code to find the specification.

   The intake manifold pressure is listed on line 14 or 15.

| | | |
|---|---|---|
| | 1 Pump Code | X002-C |
| | 2 Date - Control Parts List | OCT82 0465 |
| a | 3 Test HP @ RPM | 285 - 295 @ 2200 |
| b | 4 Engine Fuel PSI | 160 - 178 |
| | 5 Torque Rise % CURVE | 20 PRELIM |
| | 6 No Air Snaprail PSI | |
| c | 7 Fuel Rate Pound Per Hour | 98 - 102 |
| | 8 Auto Gov Cutoff | 2230 - 2250 |
| | 9 VS Gov Cutoff | |
| | 10 Throttle Leakage - Cc-Pph | 75 |
| | 11 Throttle Travel | 28 |
| | 12 Idle Speed PSI @ RPM | 30 @ 500 |
| | 13 Idle Speed CC @ RPM | 300 @ 700 |
| | 14 Intake Mfd Press in Hg | 37 - 45 |
| d | 15 Calibration PSI @ RPM | 160 @ 2,200 |
| | 16 Calibration Flow | 420 |
| | 37 AFC PSI - Flow | 73 [illegible] |
| | 38 AFC Spring | 179826 |
| | 39 AFC No Air Setting RPM | 1600 |
| e | 40 AFC No Air PSI - Flow | 58 - 230 |

1800oa

4. Operate the engine at full load and rated RPM.

   Compare the value to specifications.

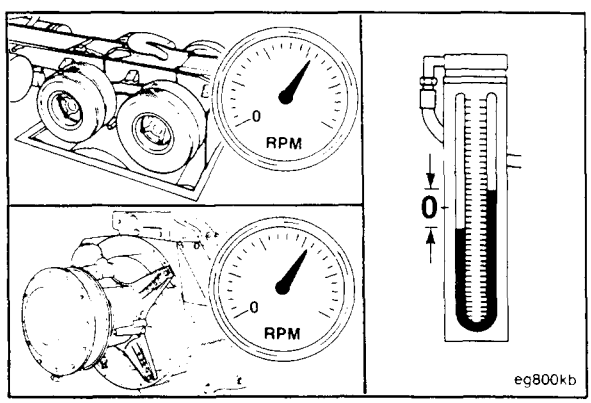

# NOTES

# Section 04 - Compressed Air System

## Section Contents


| | Reference No. | Page No. |
|---|---|---|
| General Information | 04-01 | 4-2 |
| Specifications | 04-02 | 4-3 |
| Flow Diagrams | 04-03 | 4-5 |
| Service Tools | 04-04 | 4-6 |


## System Troubleshooting and Repair List


| | Procedure No. | Page No. |
|---|---|---|
| Carbon Buildup, Air Compressor - Check | 04-05 | 4-7 |
| Gasket Leaks, Air Compressor - Check | 04-06 | 4-9 |
| Air Governor - Check (Air Compressor Not Pumping) | 04-07 | 4-9 |
| Air Governor - Check (Air Compressor Pumping Continuously) | 04-08 | 4-10 |
| Lubricating Oil Usage, Air Compressor - Check | 04-09 | 4-12 |
| Unloader Valve, Air Compressor - Replace | 04-10 | 4-13 |
| Unloader Valve, Air Compressor - Check | 04-11 | 4-16 |
| Intake/Exhaust Valve Leak, Air Compressor - Check | 04-12 | 4-17 |
| Cylinder Head, Air Compressor - Rebuild on Engine | 04-13 | 4-19 |
| Cylinder Head, Air Compressor - Replace | 04-14 | 4-23 |
| Air Compressor (Single Cylinder) - Replace | 04-15 | 4-27 |
| Air Compressor (Two Cylinder) - Replace | 04-16 | 4-30 |
| Air Compressor - Check for Reuse | 04-17 | 4-34 |

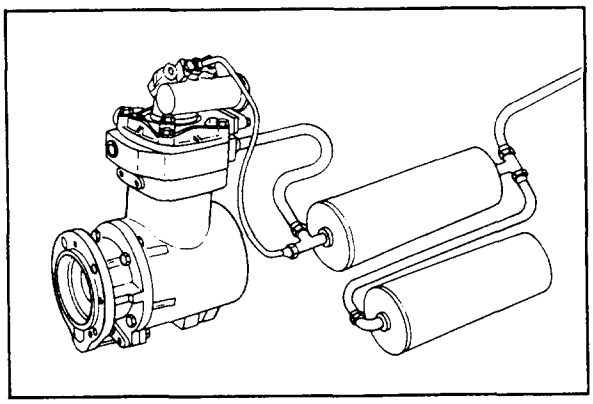

# General Information (04-01)

The compressed air system normally consists of a gear driven air compressor, an air governor, air tanks and all necessary plumbing.

Most of the illustrations in the procedures show the single cylinder air compressor. Differences in procedures for one and two cylinder air compressors will be shown where necessary.

The Cummins Holset single and two cylinder air compressors are engine driven piston type compressors which supply compressed air to operate air activated devices. The compressor "runs" continuously but has a "loaded" and "unloaded" operating mode. The operating mode is controlled by a pressure activated governor and the compressor unloading assembly. When the air system reaches a predetermined pressure, the governor applies an air signal to the air compressor unloader assembly causing the unloader valve to hold the compressor intake valve open and compressed air stops flowing into the air system. As the air in the air system is used, the pressure drops. At a predetermined pressure the governor exhausts the air signal to the compressor unloader assembly allowing the compressor to again pump compressed air into the air system.

# Compressed Air System Specifications - (04-02)

## Single Cylinder Air Compressor

Cylinders ..... 1
Compressor Capacity @ 1250 RPM ..... 6.2 L per sec. [13.20 CFM]
Piston Displacement ..... 296 C.C. [18.6 C.I.]
Bore ..... 92.08 mm [3.625 in.]
Stroke ..... 44.45 mm [1.750 in.]
Speed ..... Engine Speed
Cooling ..... Engine Coolant
Lubrication ..... Engine Lubricating Oil
Plumbing Line Sizes
- Coolant Inlet and Outlet (Pipe Fitting) ..... 9.53 mm NPTF [0.375 in. NPTF]
- Air Inlet (Inside Diameter) ..... 22.22 mm [0.875 in.]
- Air Outlet (Minimum Inside Diameter) ..... 12.7 mm [0.50 in.]

Height, Overall (Approximate) ..... 31.1 cm [12.25 in.]
Width, Overall (Approximate) ..... 14.6 cm [5.75 in.]
Length, Overall (Approximate) ..... 22.9 cm [9.00 in.]
Weight (Approximate) ..... 18 Kg [40.0 lbs]

## Two Cylinder Air Compressor

Cylinders ..... 2
Compressor Capacity @ 1250 RPM ..... 14.2 L per sec. [30.00 CFM]
Piston Displacement ..... 676 c.c. [41.3 C.I.]
Bore ..... 92.08 mm [3.625 in.]
Stroke ..... 50.8 mm [2.00 in.]
Speed ..... Engine Speed
Cooling ..... Engine Coolant
Lubrication ..... Engine Lubricating Oil
Plumbing Line Sizes
- Coolant Inlet and Outlet (Pipe Fitting) ..... [0.375 in. NPTF]
- Air Inlet (Inside Diameter) ..... 22.22 mm [0.875 in.]
- Air Outlet (Minimum Inside Diameter) ..... 15.88 mm [0.625 in.]

## Two Cylinder Air Compressor Specifications (Continued)

Height, Overall (Approximate) .....34.3 cm [13.50 in.]

Width, Overall (Approximate) .....17.8 cm [7.00 in.]

Length, Overall (Approximate) .....28.7 cm [11.30 in.]

Weight (Approximate) .....33.5 kg [74.50 lb.]

**NOTE:** In applications where duty cycles average 10 percent or more, (refuse trucks, pickup and delivery trucks, transit buses and equipment with high accessory air usage) or air pressures are above 862 kPa [125 psi], use a discharge line with a minimum inside diameter of 19.05 MM [0.750 in.] to prevent carbon buildup.

## Compressor Spring Force Specifications

| | | | | | | Force Required to Compress | |
|---|---|---|---|---|---|---|---|
| Spring Part Number | Spring Use | Approx. Free Length mm (inch) | Number of Coils | Wire Diameter mm [inch] | Measure-ment Length mm [inch] | Minimum N [lb.] | Maximum N [lb.] |
| 128080 | Exhaust Valve | 17.02 [0.670] | 3.0 | 2.03 [0.080] | 7.11 [0.280] | 35.6<br>3.63 [8.00] | 46.3<br>4.72 [10.40] |
| 190334 | Intake Valve | 12.70 [0.500] | 2.8 | 1.58 [0.062] | 7.11 [0.280] | 3.45<br>0.25 [0.55] | 4.89<br>0.50 [1.10] |
| 150631 | Unloading Valve (naturally aspirated) | 41.91 [1.650] | 11.5 | 2.03 [0.080] | 24.89 [0.980] | 133.4<br>13.6 [30.00] | 169.0<br>17.23[38.00] |
| 217557 | Unloading Valve (turbocharged up to 1270 mm Hg [50 in Hg]) | 41.91 [1.650] | 12.0 | 1.83 [0.072] | 24.89 [0.980] | 75.6<br>7.72 [17.00] | 97.9<br>9.98 [22.00] |
| 3003101 | Unloading Valve (all turbocharged engines) | 41.91 [1.650] | 10.8 | 2.89 [0.065] | 24.89 [0.980] | 53.4<br>5.4 [12.00] | 75.6<br>7.72 [17.00] |

# Compressed Air System Flow Diagrams - (04-03)

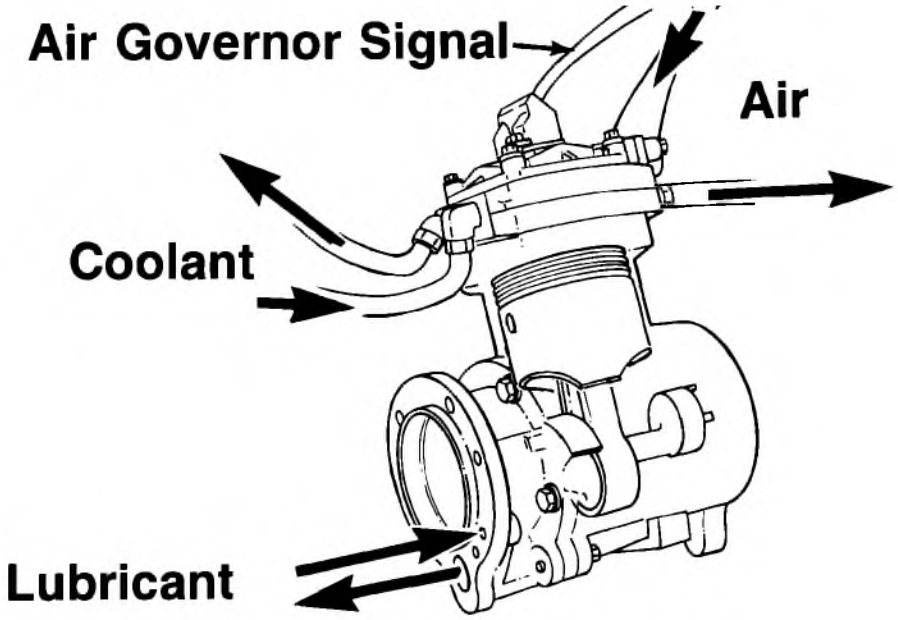


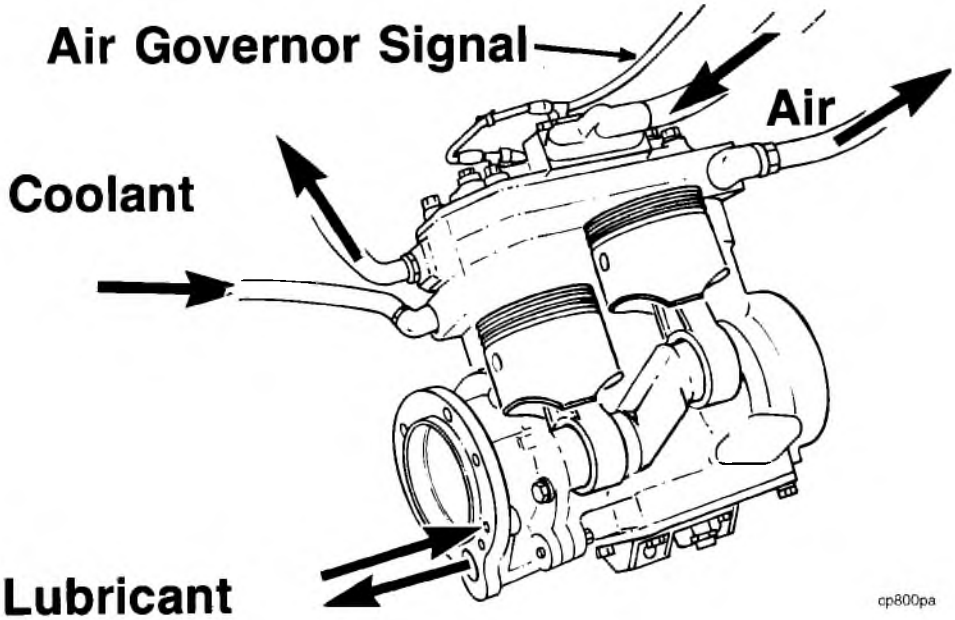

# Service Tools - (04-04)

The following special tools are recommended to perform the procedures in Section 04. The use of these tools is shown in the appropriate procedure. These tools can be purchased from your local Cummins Authorized Repair Location.

| Tool No. | Tool Description | Tool Illustration |
|---|---|---|
| ST-544 | **Valve Seat Puller.**<br>Remove exhaust valve seat from standard air compressor. | 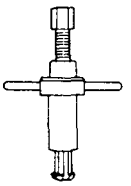 |
| ST - 1257 | **Valve Vacuum Tester**<br>Test intake and exhaust valve sealing | 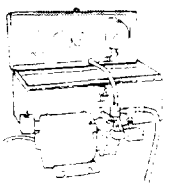 |
| | | |
| | | |
| | | |
| | | |

# Carbon Buildup, Air Compressor - Check (04-05)

**Note:** The illustrations shown will be of the single cylinder air compressor. Differences in procedures for one and two cylinder Cummins air compressors will be shown where necessary.

1. Shut off the engine.
2. Open the draincock on the "wet tank" to release air pressure from the system.

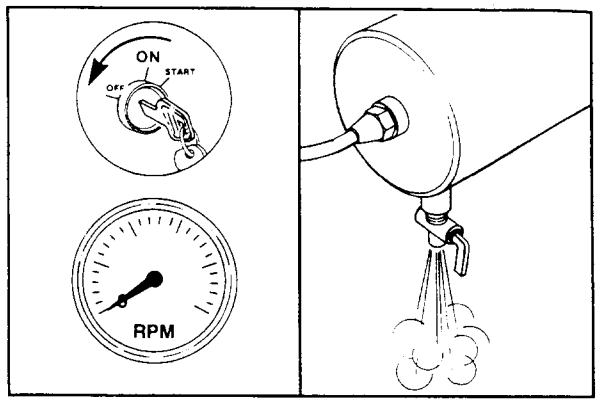


3. Remove the air discharge line from the air compressor and the first "wet tank".

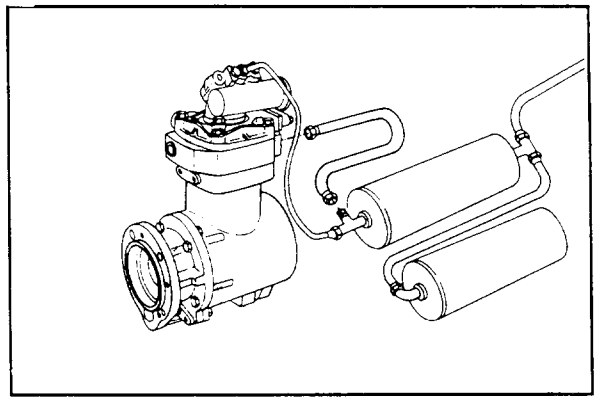

4. Measure the total carbon deposit thickness inside the air discharge line as shown.

**Note:** The carbon deposit thickness must not exceed 1.6 mm [1/16 inch].

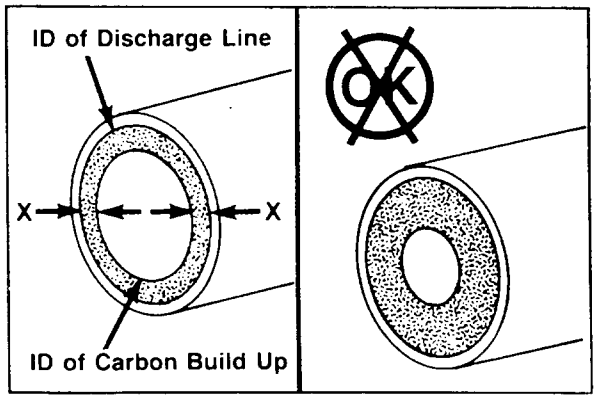


**Note:** If the total carbon deposit thickness exceeds specification:

Clean or replace. Refer to manufacturer's material specifications.

**Warning: The air discharge line must be capable of withstanding extreme heat and pressure to prevent personal injury and property damage. Refer to the manufacturer's specifications.**

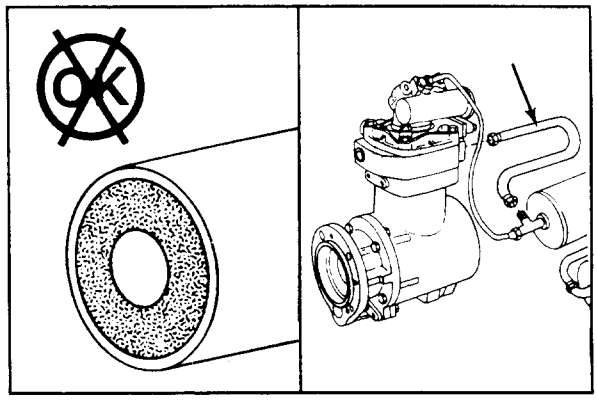

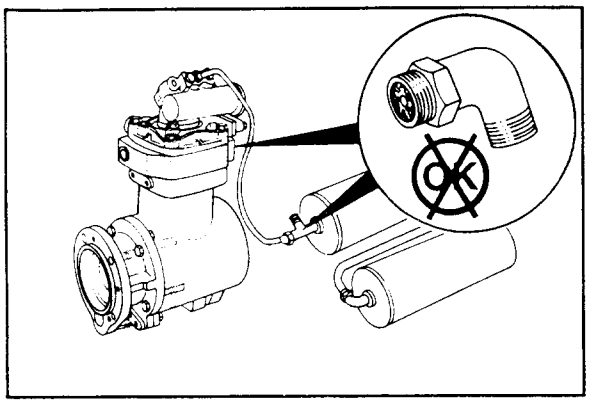

Continue to check for carbon buildup in the air discharge line connections up to the first or "wet" tank.

Clean or replace any fittings with carbon deposits greater than 1.6 mm [0.06 (1/16) inch]. Refer to the manufacturer's specifications for cleaning or replacement instructions.

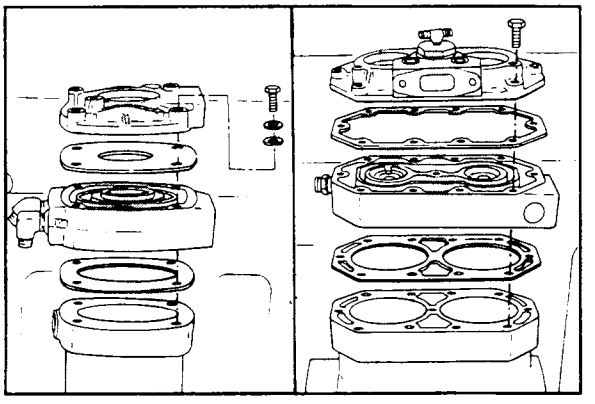

Replace the cylinder head. Refer to Procedure 04-14.

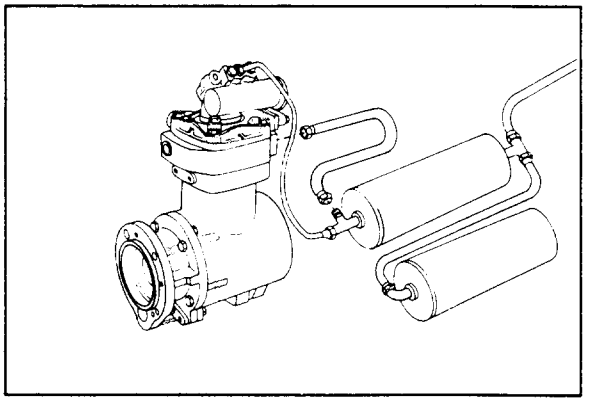

Install the air discharge line.

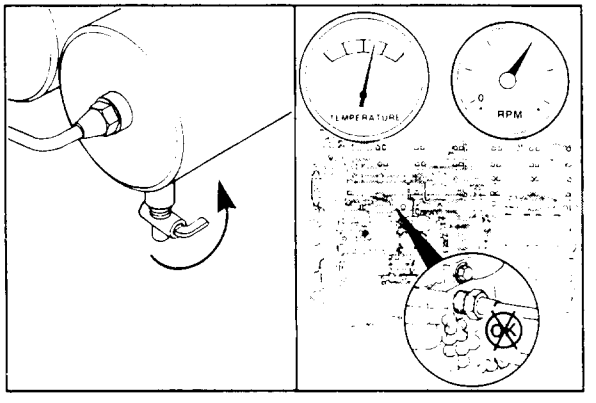


Close the "wet tank" draincock.

Operate the engine and check for air leaks.

# Gasket Leaks, Air Compressor - Check (04-06)

**Note:** The illustrations shown will be of the single cylinder air compressor. Differences in procedures for one and two cylinder Cummins air compressors will be shown where necessary.

1. Shut off the engine.
2. Open the draincock on the "wet tank" to release air pressure from the system; then close after pressure is released.

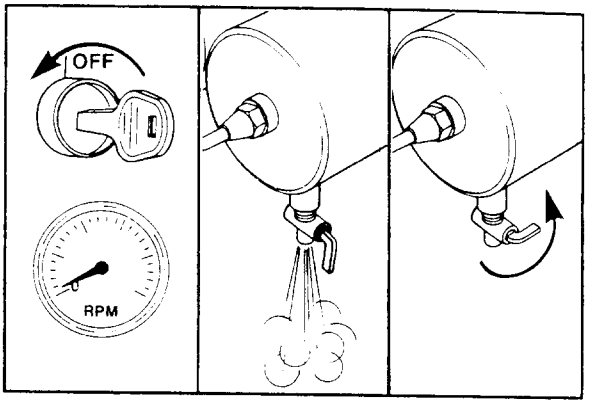


3. Operate the engine to activate the air compressor.
4. With the air compressor pumping between 550 to 690 kPa [80 to 100 psi], use a solution of soapy water to check for air leaks in the following areas:
   a. Air Compressor cover gasket.
   b. Unloader body O-ring.
   c. Air Compressor head gasket.
5. If air leaks are found, replace the leaking gasket or O-ring. Refer to Procedure 04-10 (0-ring) or 04-14 (gasket).

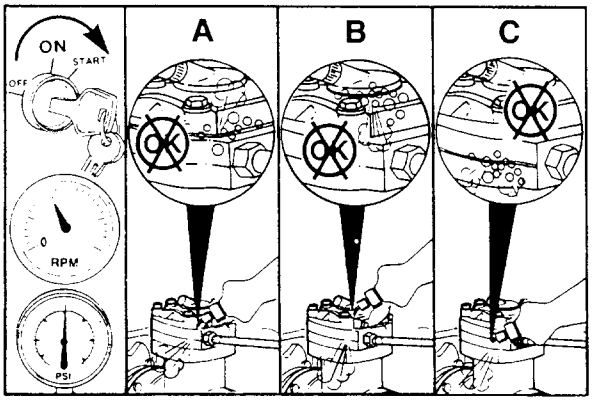


# Air Governor - Check (04-07)

## Air Compressor Will Not Pump

**Note:** The illustrations shown will be of the single cylinder air compressor. Differences in procedures for one and two cylinder Cummins air compressors will be shown where necessary.

1. Remove the air governor or air governor line from the air compressor unloader body.

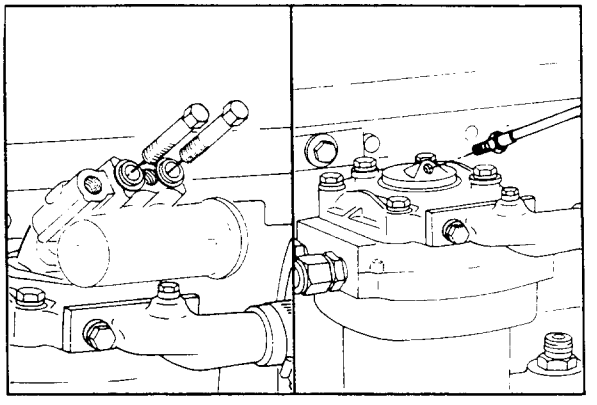

2. Operate the engine to activate the air compressor.
3. If the air compressor is pumping, the air governor is malfunctioning and must be repaired or replaced. Refer to the manufacturer's instructions.

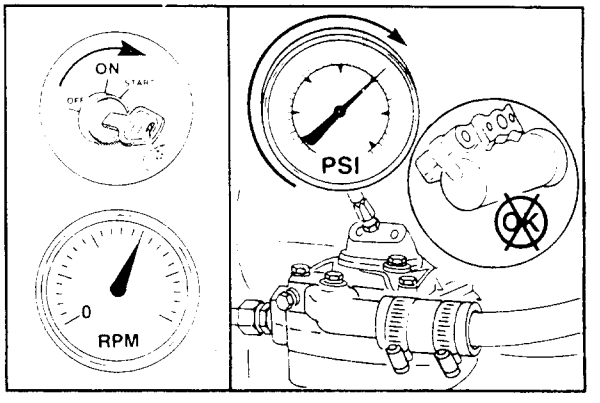

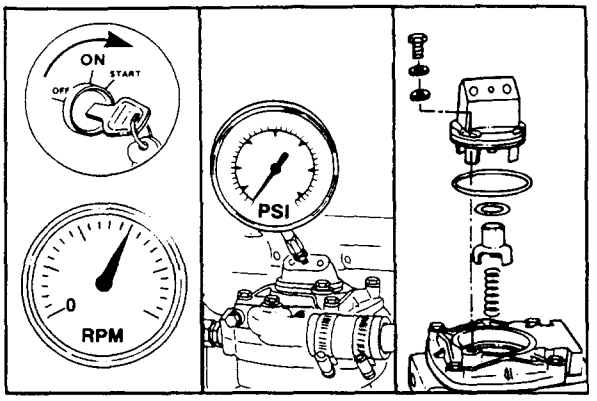


4. If the air compressor does not pump, remove, clean, and inspect the air compressor valve assembly. Refer to Procedure 04-10.

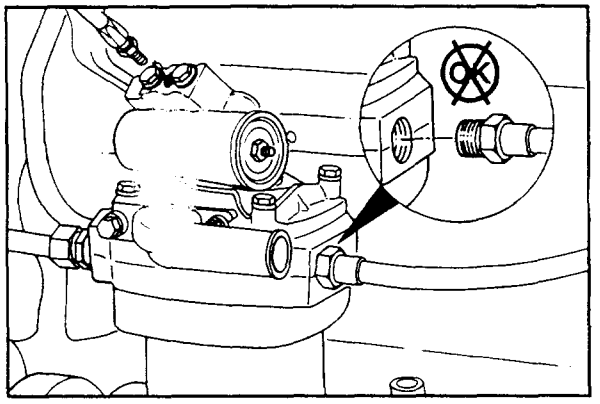


# Air Governor - Check (04-08)

## Air Compressor Pumps Continuously

**Note:** The illustrations shown will be of the single cylinder air compressor. Differences in procedures for one and two cylinder Cummins air compressors will be shown where necessary.

1. Remove the accessory air lines from the air governor unloader port.

**Note:** Do not disconnect the line from the air compressor unloader valve.

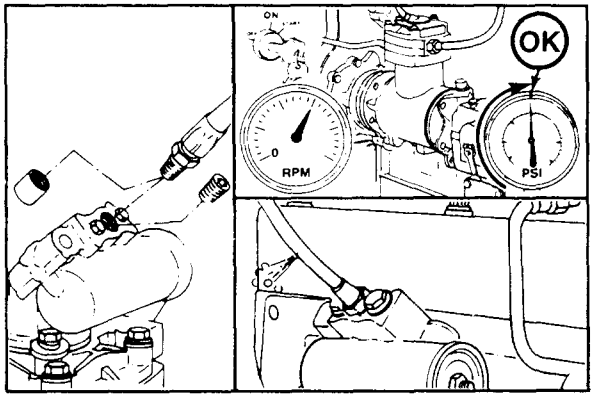


2. Install pipe plugs in the air governor unloader ports where accessory air lines were removed.
3. Operate the engine to activate the air compressor.
4. If the air compressor stops pumping (air pressure stops rising) at the governed air pressure, there is a leak in an accessory or an accessory air line. Refer to the equipment manufacturer's instructions for troubleshooting and repair.

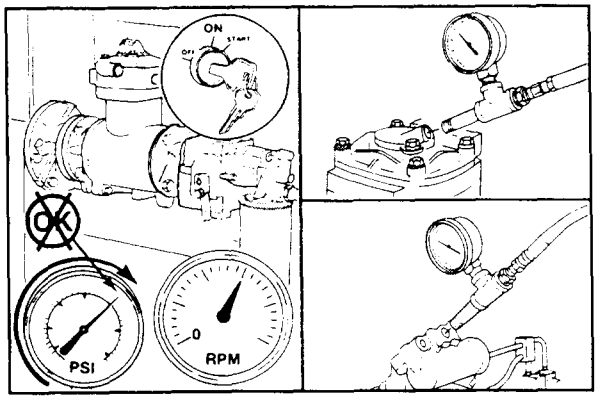


5. If the air compressor does not stop pumping (air pressure continues to rise) at the governed air pressure, connect a regulated shop air pressure line to one of the following:
   a. The air compressor unloader valve port.
   b. One of the air governor unloader valve ports.

Note: Be sure the air pressure gauge is accurate and the supply lines and fittings are in good condition before performing any air pressure checks.

Use a master gauge of known accuracy to check the air pressure gauge.

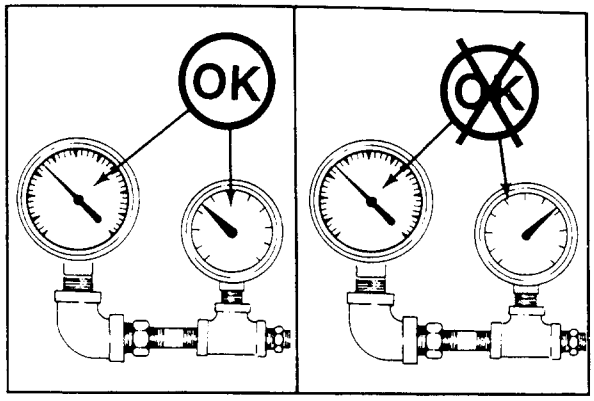


c. Apply 690 kPa [100 psi] air pressure to the unloader port.

d. If the air compressor stops pumping (air pressure stops rising), the air governor is malfunctioning and must be repaired or replaced or the air governor mounting gasket is leaking. Refer to the manufacturer's instructions.

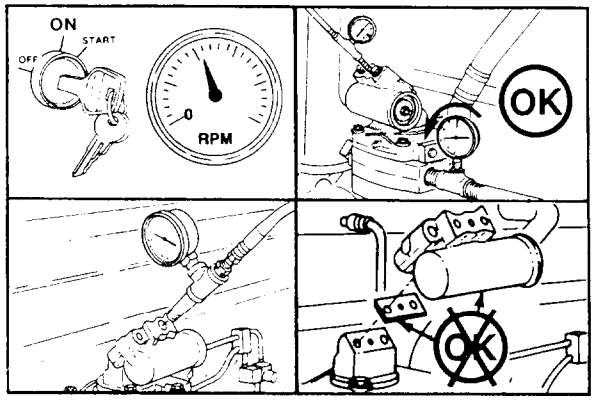


e. If the air compressor continues to pump (air pressure continues to rise), the unloader valve is malfunctioning and must be repaired or replaced. Refer to Procedure 04-10.

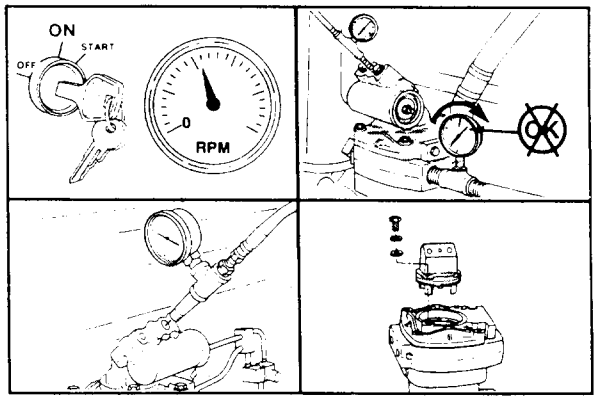


f. Remove the pipe plugs from the unloader ports used for accessory air lines.

g. Install and tighten the accessory air lines.

h. Connect the unloader valve.

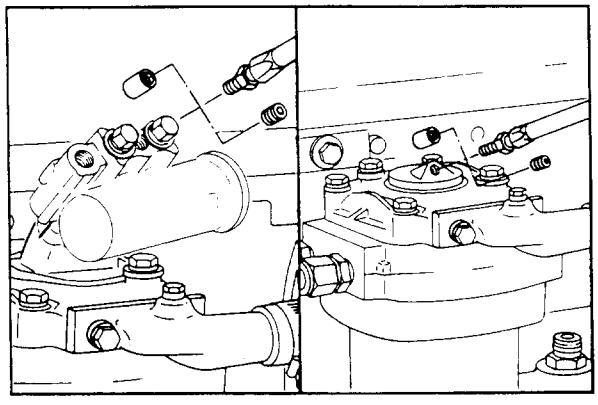

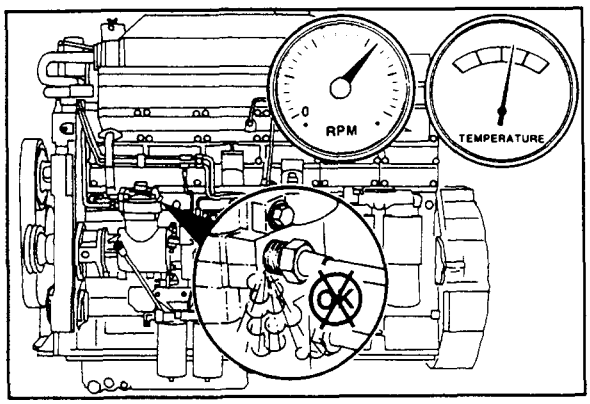


i. Operate the engine and check for air leaks.

## Lubricating Oil Usage, Air Compressor - Check (04-09)

**Note:** The illustrations shown will be of the single cylinder air compressor. Differences in procedures for one and two cylinder Cummins air compressors will be shown where necessary.

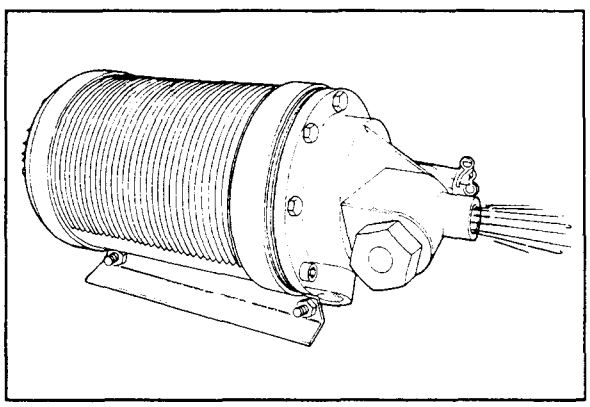

1. Cycle the air compressor 5 times while viewing the discharge from the air dryer. If the discharge appears excessively oily, perform the following check.

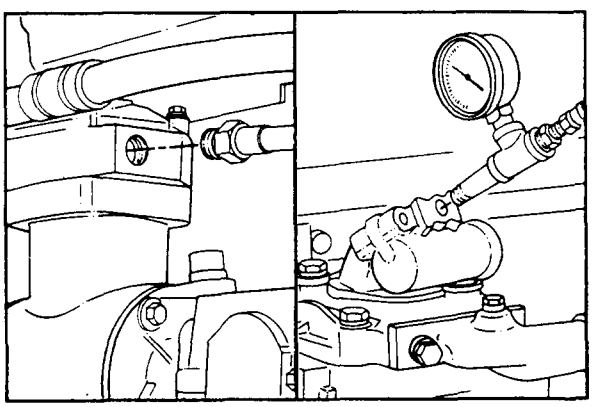

2. Remove the air discharge line from the air compressor.
3. Use a 690 kPa [100 psi] regulated shop air line to apply air pressure to the air governor unloader port.

4. Operate the engine at low idle for 10 minutes with the air compressor unloaded (shop air applied to the unloader port).
5. Remove the shop air pressure from the unloader port.
6. Operate the engine at low idle for 10 minutes with a white cloth over the air compressor discharge port.

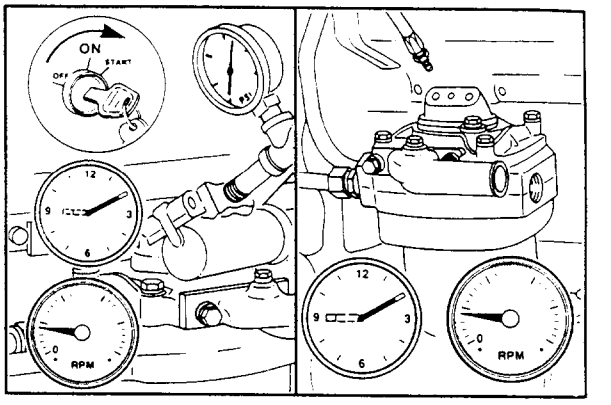


7. Remove the white cloth and inspect it for oil contamination.
8. If the cloth indicates more than a trace of grey, the air compressor is using an excessive amount of oil and must be replaced. Refer to Procedure 04-15 (Single Cylinder) or 04-16 (Two Cylinder).

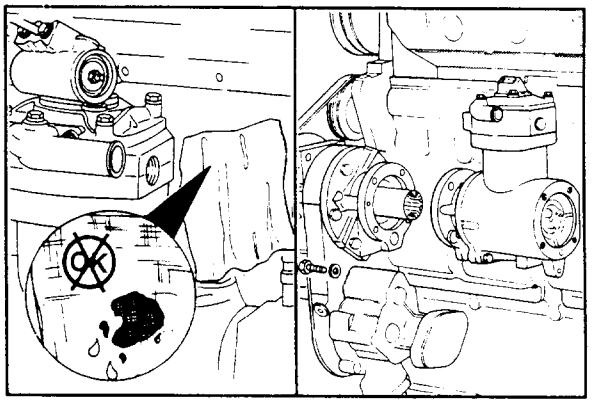

9. Install and tighten the air discharge line.
10. Operate the engine and check for air leaks.

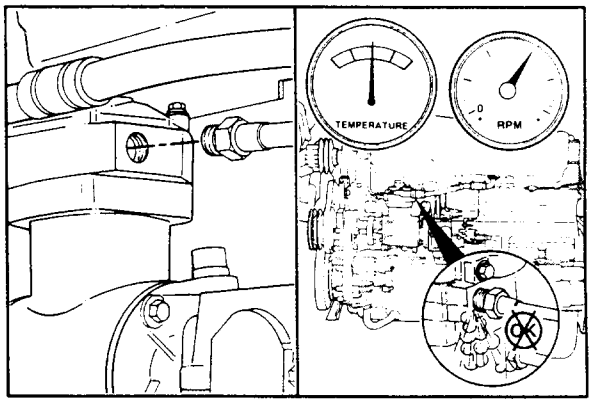


## Unloader Valve, Air Compressor - Replace (04-10)

### Remove

1. Remove the air governor or air governor signal line from the air compressor unloader body.

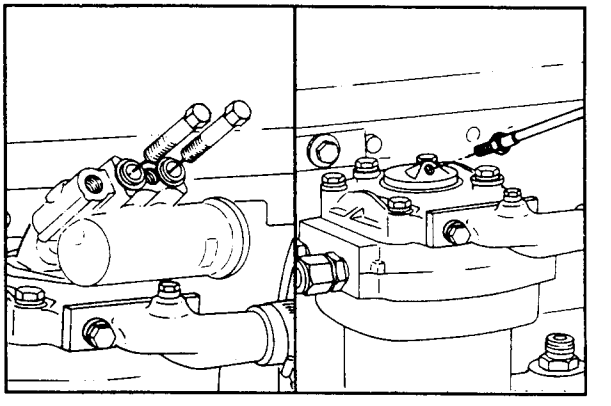

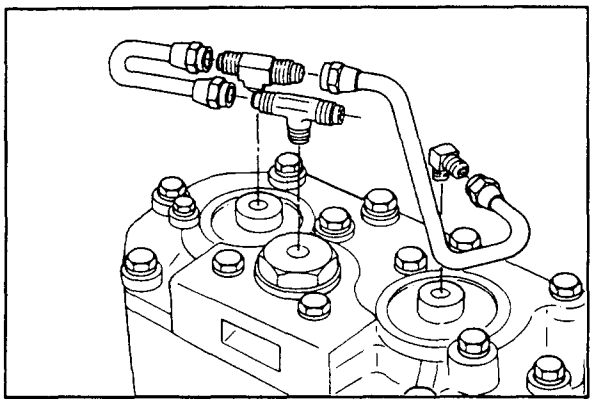

Remove the copper tubing from the top of the two cylinder air compressor (early models only).

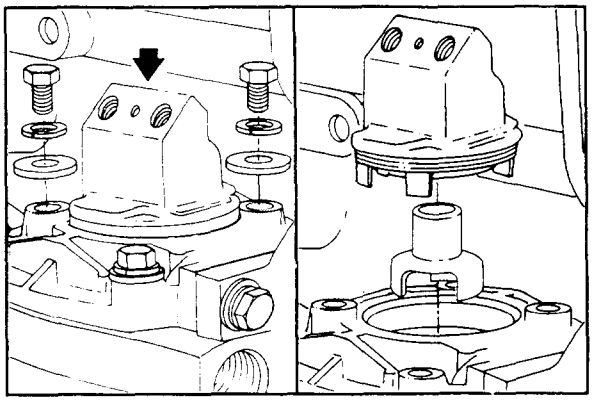

**Warning: The unloader valve body is installed with spring tension. To avoid personal injury, hold the unloader body down while removing the capscrews.**

3. Hold the unloader body down and remove the two capscrews and washers.
   a. On two cylinder air compressors, remove the two unloader assemblies above each cylinder. Discard the o-rings and seals.
   b. On a single cylinder air compressor, remove the unloader assembly. Discard the o-rings and seals.

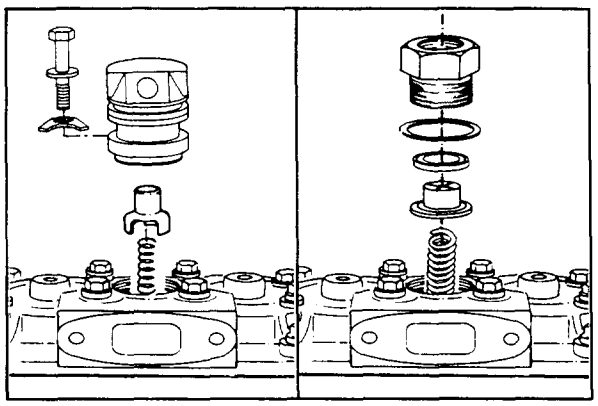

c. Remove the center unloader valve on the two cylinder air compressor. Two types have been used, one that is held down by 1 capscrew, and one that is screwed in.

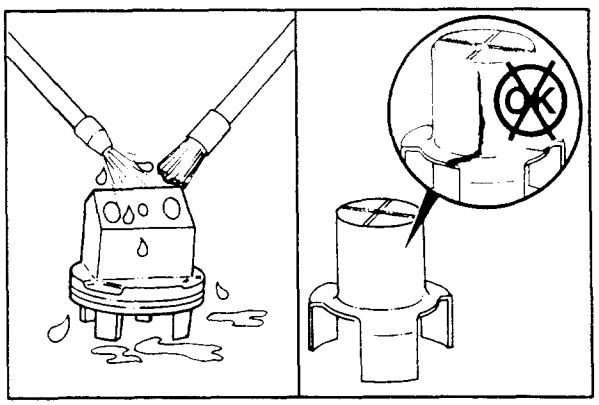

## Check For Reuse

1. Clean the unloader valve with solvent and a nonmetallic brush to remove carbon. Do not use a sharp object. The sealing surfaces may be damaged.
2. Check for reuse. Refer to Procedure 04-11.

## Install

1. Install the unloader valve cap spring in the air compressor.

**Note:** Some unloader bodies require 2 yellow o-rings.

**Note:** The rectangular ring seal must be installed with the grooved side up.

2. Install the rectangular ring seal as shown.
3. Use anti-seize compound to lubricate the outside diameter of the cap.
4. Install the unloader valve cap in the unloader body.

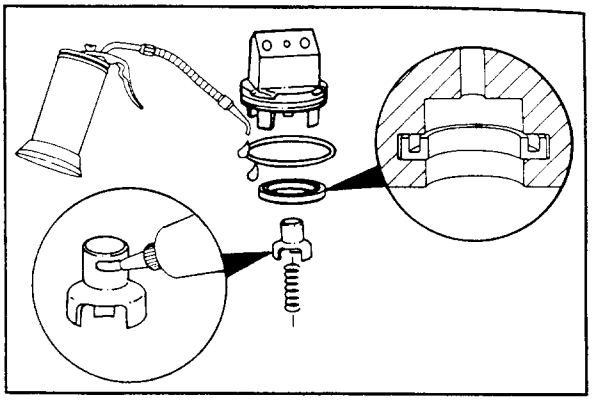

5. Use clean engine oil to lubricate the o-ring seals.
6. Install the unloading valve body.

**Caution: Press the unloading valve body down to be sure the tangs of the unloader valve cap are in the three slots of the intake valve seat.**

7. Hold the unloading body down and install the two plain washers and captive washer capscrews.
8. Tighten the capscrews to 15 N•m [120 in-lbs] torque.

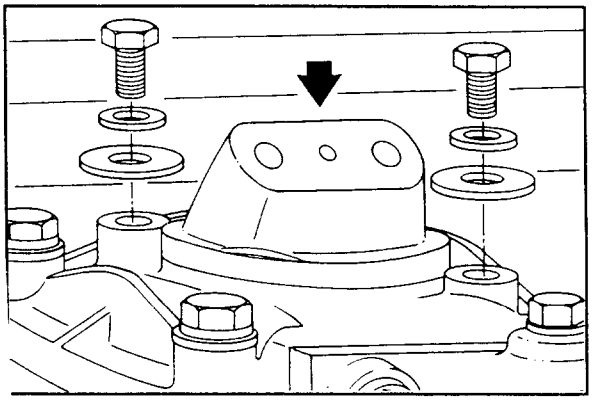

9. Install the center unloader on the two cylinder air compressor. Follow steps 1 through 7. Tighten the capscrews to 40 N•m [30 ft-lb].

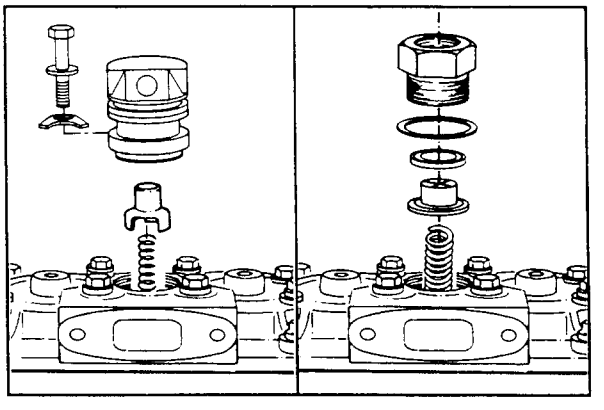

10. Install the copper tubing to the top of the two cylinder air compressor (early models only).

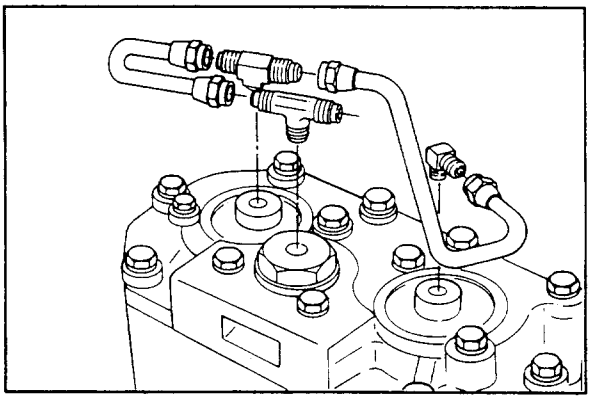

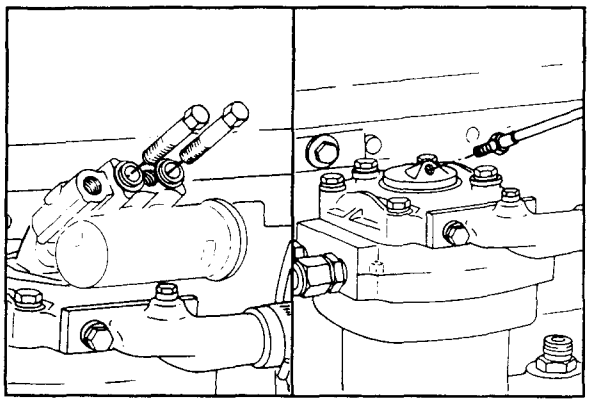

11. Install the air governor or air governor signal line to the unloader body.

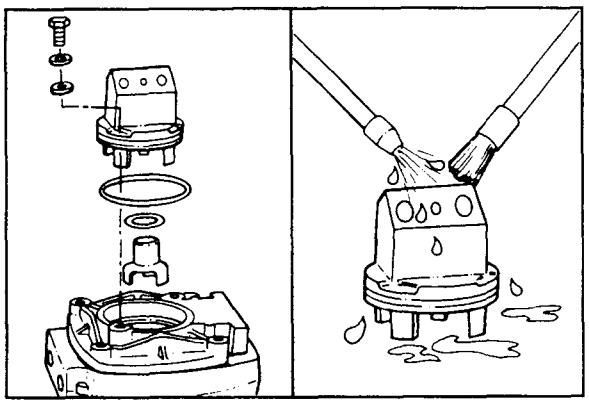

## Unloader Valve - Check (04-11)

**Note:** The illustrations shown will be of the single cylinder air compressor. Differences in procedures for one and two cylinder Cummins air compressors will be shown where necessary.

1. Remove the air compressor unloader assembly. Refer to Procedure 04-10.
2. Clean the unloader valve with solvent and a non-metallic brush to remove carbon. Do not use a sharp object. The sealing surfaces may be damaged.

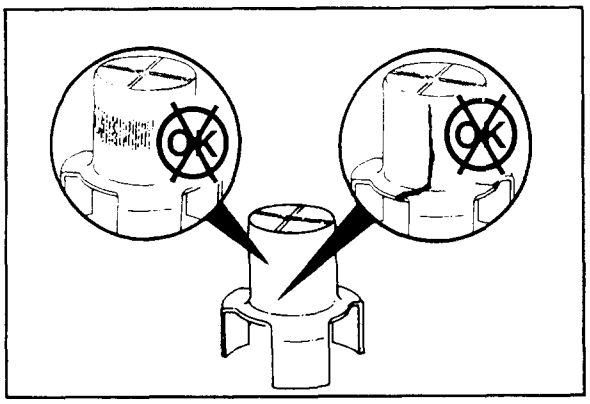


3. Visually inspect the unloader valve for deep scratches or cracks.

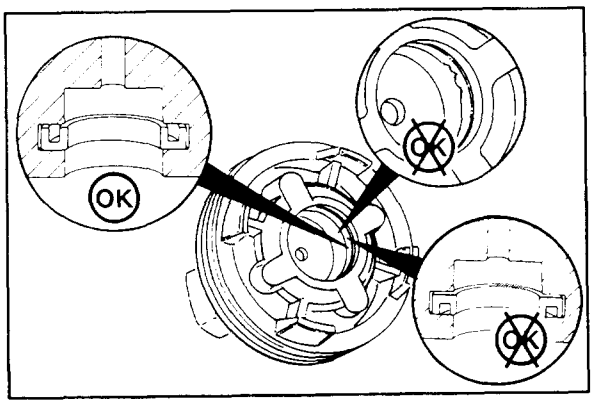


4. Visually inspect the rectangular seal for damage or incorrect installation.

5. Visually inspect the unloader body o-ring for damage.

**Note:** Replace the o-ring if it is damaged. Determine the cause for the damage and repair the problem.

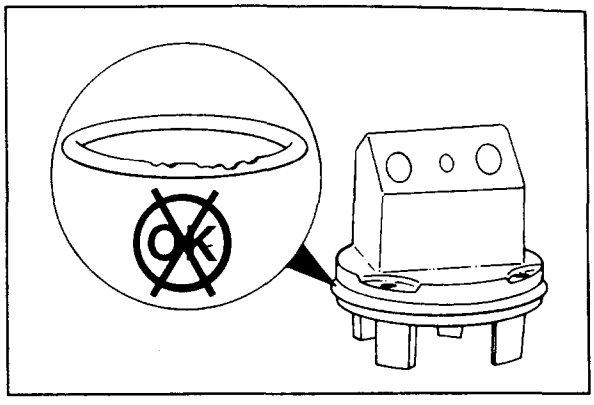

6. Assemble the air compressor. Refer to Procedure 04-10.
7. Operate the engine and check for air leaks.

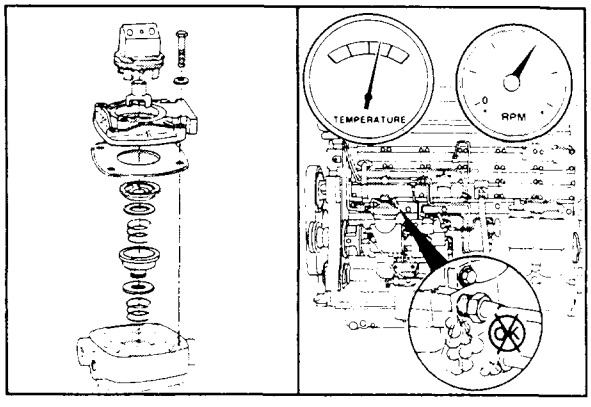


## Intake / Exhaust Valves, Air Compressor - Check (04-12)

### Remove:

1. Remove the air governor or air governor signal line from the unloader body.

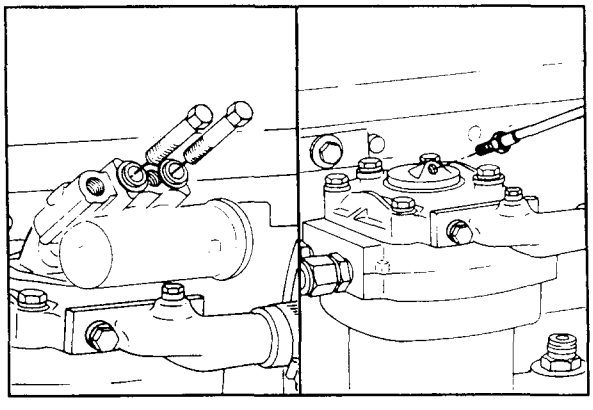

2. Remove the air inlet and outlet connections from the air compressor.

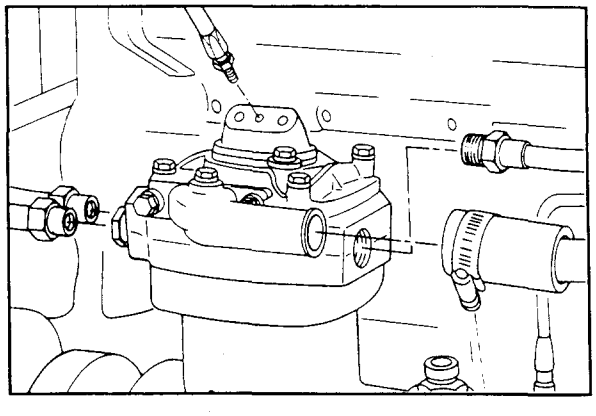

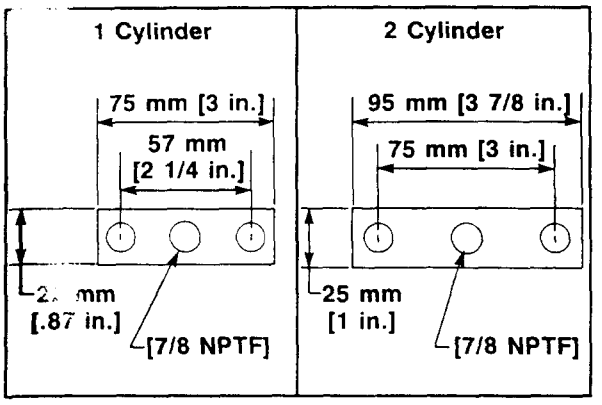


## Install

1. Make a plate to fit over the air compressor inlet. Put a fitting in the plate to attach the hose from the valve vacuum tester.

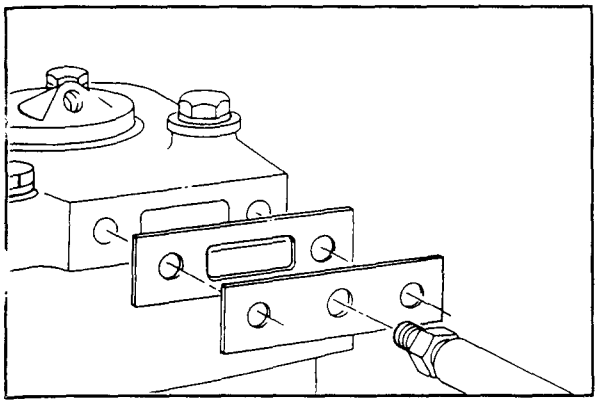

2. Use the valve vacuum tester, Part No. ST-1257, or equivalent. Attach the tester, plate, and gasket to the air compressor inlet.

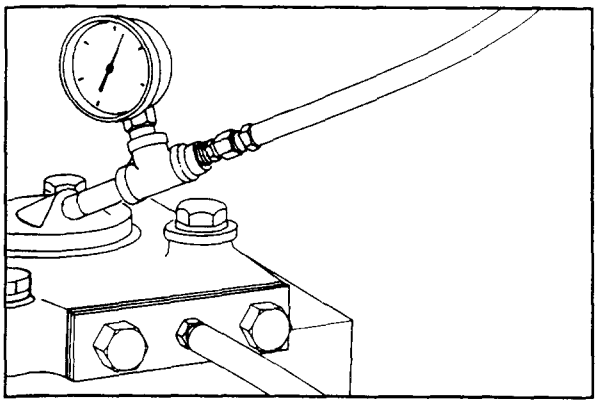

3. Attach a regulated air supply to the unloader valve.

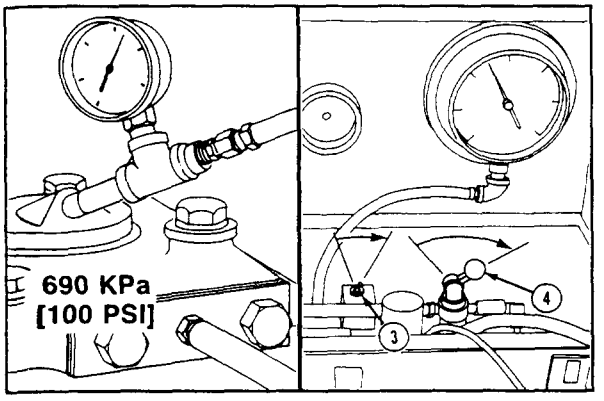


## Test

1. Apply 100 psi to the unloader valve to open the intake valve.
2. Move the toggle switch (3) to the "ON" position.

   Turn the vacuum control valve (4) to the "OPEN" position.

**Note:** The vacuum control valve is in the "OPEN" position if the vacuum gauge needle moves clockwise.

3. When the gauge reads between 20 in-Hg and 25 in-Hg, turn the toggle switch (3) to the "CLOSED" (or "OFF") position. Close the vacuum control valve (4).

   Watch for a decay in the vacuum. If there is decay, replace the exhaust valve or exhaust valve seat. Refer to Procedure 04-13.

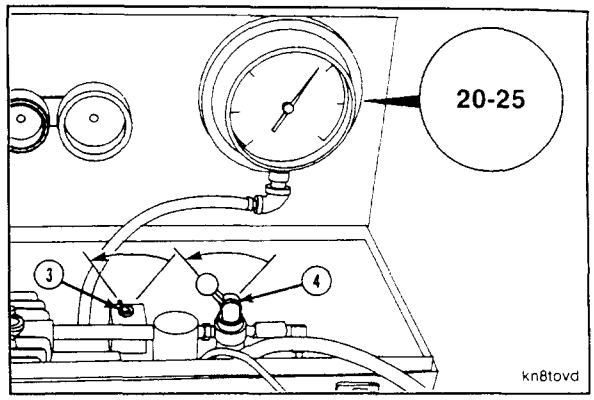


4. Remove the air pressure at the unloader. This will allow the intake valve to close.

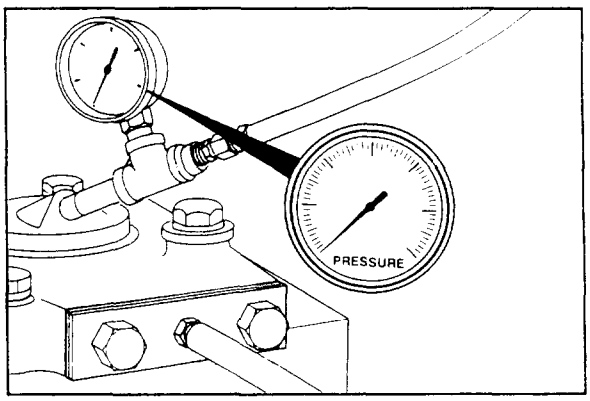


5. Apply 20 to 25 in-Hg vacuum to the intake valve.
6. Shut off the vacuum. If the vacuum decays replace either the unloader body o-ring, intake valve, or intake valve seat. To check the o-ring, refer to Procedure 04-06. To replace the intake valve or valve seat, refer to Procedure 04-13.

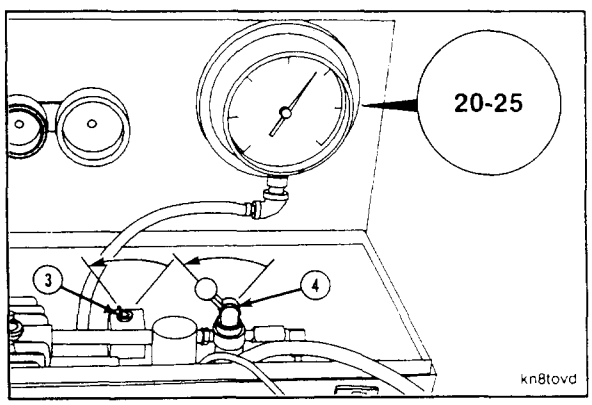


## Cylinder Head, Air Compressor - Rebuild On Engine (04-13)

**Note:** The cylinder head on air compressor models SS296 and ST676 cannot be rebuilt while on the engine. The exhaust valve requires a press for removal. Refer to the Air Compressor Shop Manual.

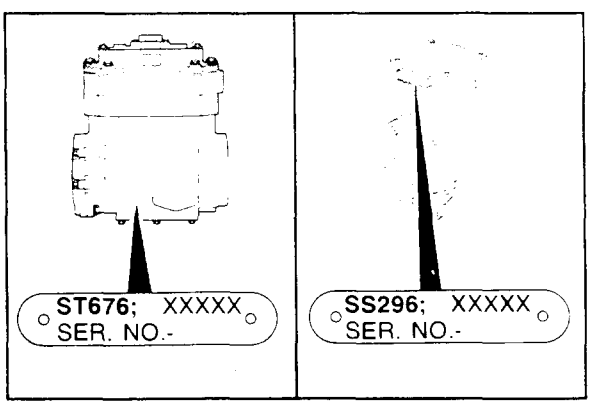

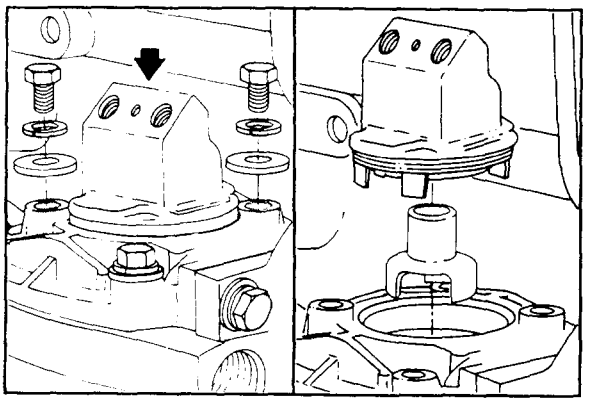

## Remove

1. Remove the unloader body and all related parts. Refer to Procedure 04-10.

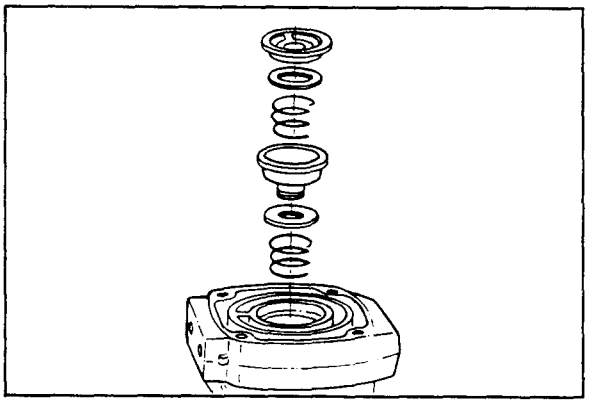

2. Remove the intake valve seat, intake valve, and intake valve spring.
3. Use ST-544 valve seat puller, or equivalent. Remove the exhaust valve seat, exhaust valve, and exhaust valve spring.

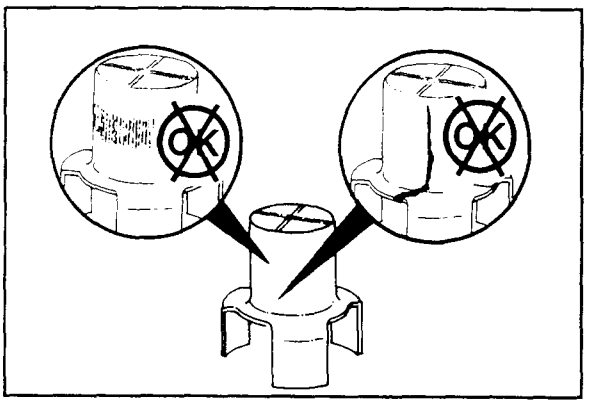

## Check for Reuse

1. Clean and check all the parts for reuse. Visually inspect the unloader valve for deep scratches or cracks.

COMPRESSOR SPRING FORCE SPECIFICATIONS

| Spring Part No | Spring Use | Approx Free Length mm [inch] | No. of Coils | Wire Diameter mm [inch] | Force Measurement Length | Min N kg [lb.] | Max N kg [lb.] |
|---|---|---|---|---|---|---|---|
| 128080 | Exhaust Valve | 17.02 [0.670] | 3.0 | 2.03 [0.080] | 7.11 [0.280] | 35.6 3.63 [8.00] | 46.3 4.72 [10.40] |
| 190334 | Intake Valve | 12.70 [0.500] | 2.8 | 1.58 [0.062] | 7.11 [0.280] | 3.45 0.25 [0.55] | 4.89 0.50 [1.10] |
| 150631 | Unloading Valve (naturally aspirated) | 41.91 [1.650] | 11.5 | 2.03 [0.080] | 24.89 [0.980] | 133.4 13.6 [30.00] | 169.0 17.23 [38.00] |
| 217557 | Unloading Valve (turbocharged up to 1270 mm Hg) [50 in. Hg] | 41.91 [1.650] | 12.0 | 1.83 [0.072] | 24.89 [0.980] | 75.6 7.72 [17.00] | 97.9 9.98 [22.00] |
| 3003101 | Unloading Valve (all turbocharged engines) | 41.91 [1.650] | 10.6 | 2.89 [0.065] | 24.89 [0.980] | 53.4 5.4 [12.00] | 75.6 7.72 [17.00] |

2. Check the spring tension of the unloader spring.
3. Check the free length of the intake and exhaust valve springs.

4. Check for correct unloader spring usage. A flat hat unloader (1) must use Part No. 150631 spring. A three prong unloader can use Part No. 217557 or 3003101, depending on the amount of turbocharger boost.

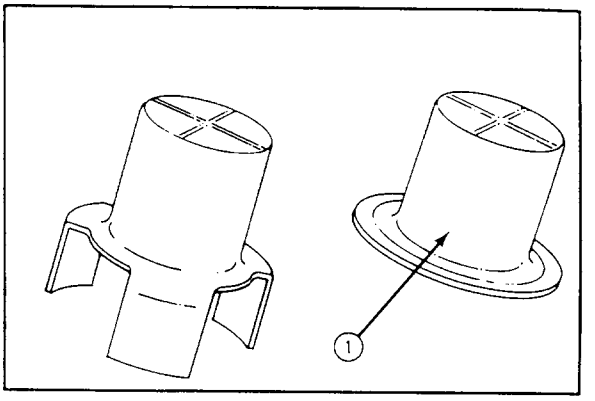


5. Inspect the valve assembly components. Apply a "bluing" compound to the exhaust valve seating surface.

   Inspect the exhaust valve and check the seating area. Replace the seat if the contact area is not 100 percent.

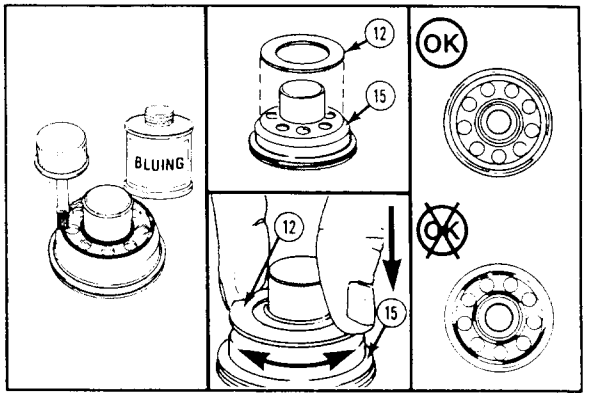


6. Measure the exhaust valve seat height.

   If the seat height is less than 12.32 mm [0.485 inch], replace the seat.

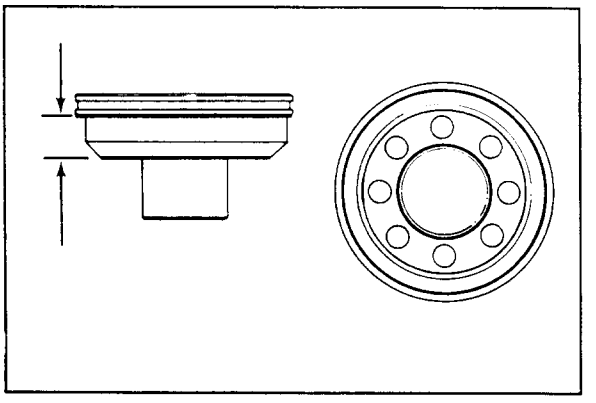

7. Apply a "bluing" compound to the intake valve seating surfaces.

   Install the intake valve and check the seating area. Replace the seat if the contact area is not 100 percent.

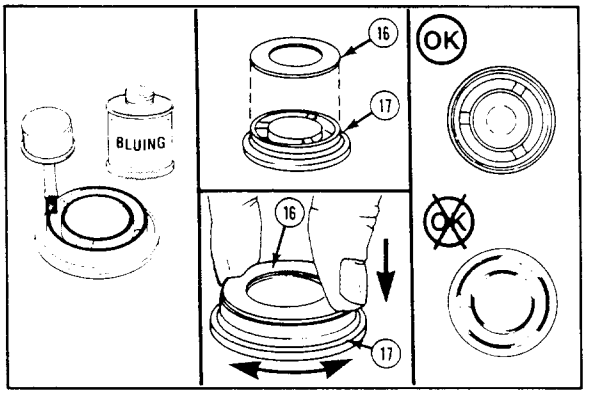

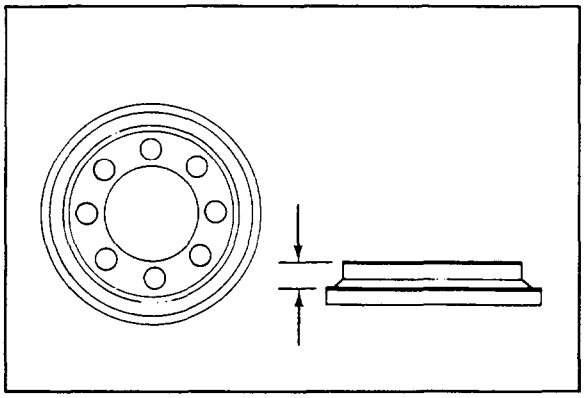

8. Measure the intake valve seat height.

   If the seat height is less than 6.86 mm [0.270 inch], replace the seat.

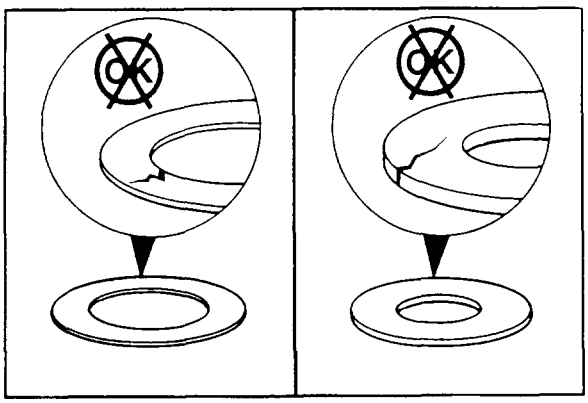

9. Visually inspect the intake and exhaust valves for cracks or damage.

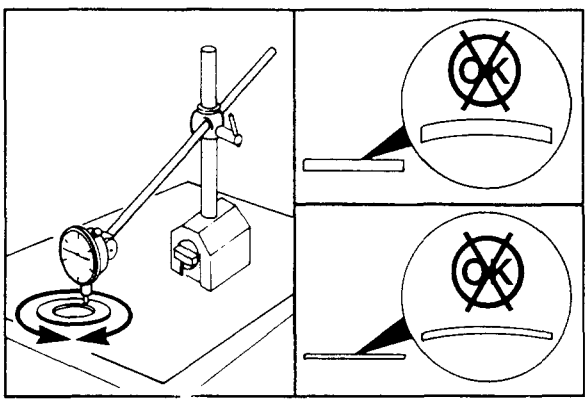

10. Measure the flatness of the intake and exhaust valves. Both valves must be flat within 0.03 mm [0.001 inch].

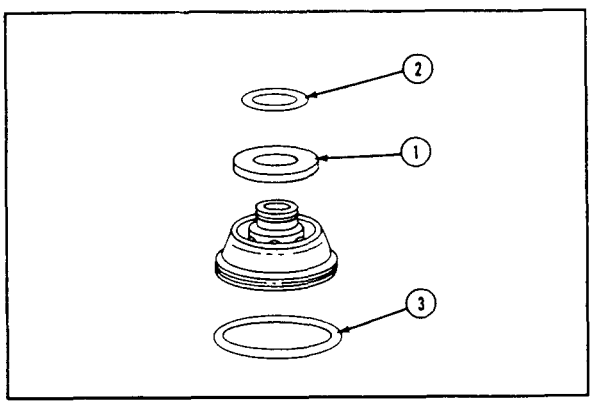


## Install

1. Install the exhaust valve (1) and small o-ring (2) on the exhaust valve seat.

**Note:** The small o-ring is not required on air compressor models SS296 and ST676.

2. Install the large o-ring (3) on the exhaust valve seat.

3. Install the wear plate (4) and exhaust valve spring (5).
4. Lubricate the o-rings with engine oil and install the exhaust valve assembly (6).

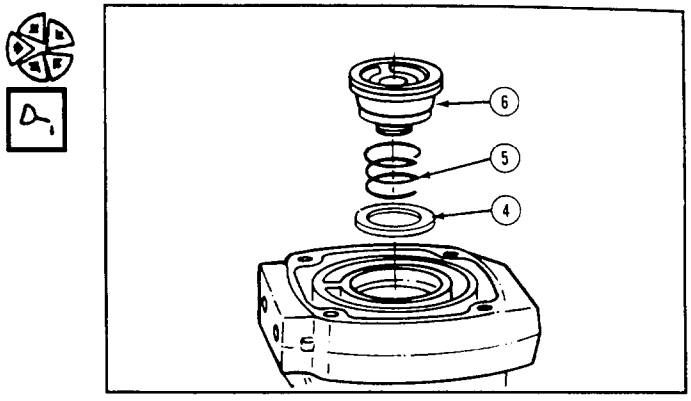


5. Install the intake valve spring and intake valve as shown.
6. Install the intake valve seat with the flange side up as shown.

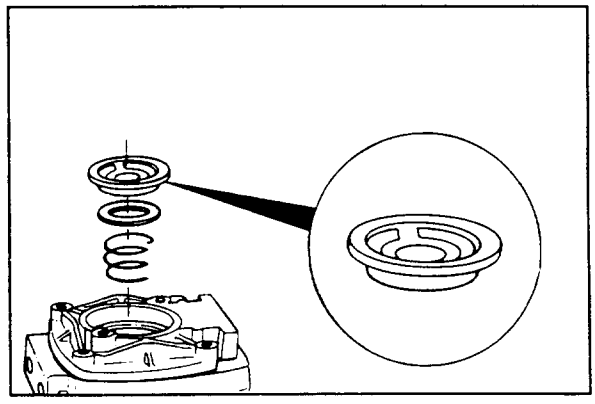

7. Install the unloader body and all related parts. Refer to Procedure 04-10.

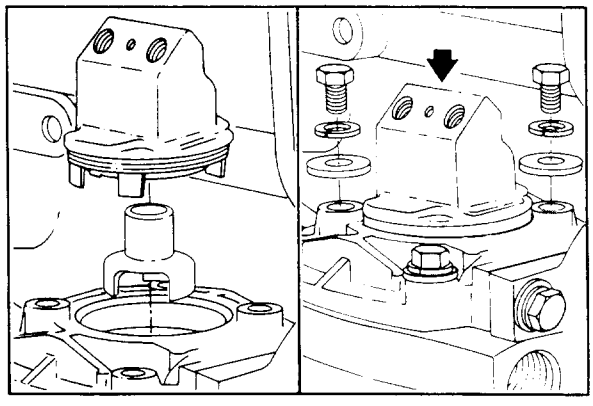

# Cylinder Head, Air Compressor - Replace (04-14)

## Remove

**Note:** The illustrations shown will be for a single cylinder air compressor. Differences in procedures for the one and two cylinder air compressors will be shown where necessary.

**Note:** On Cummins two cylinder air compressors, complete the disassembly and assembly steps for the valve assemblies on both cylinders.

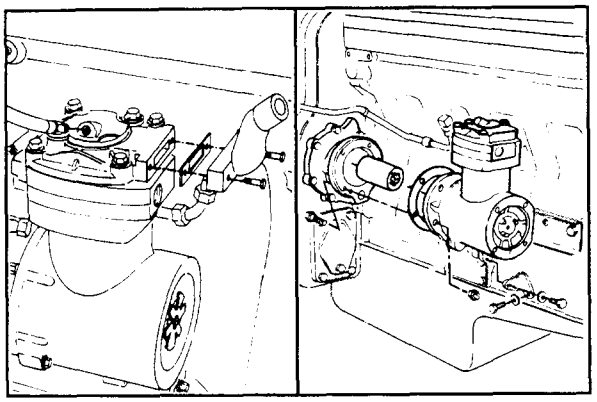

1. Drain the coolant. Refer to Procedure 01-06.
2. Remove the coolant lines from the air compressor.

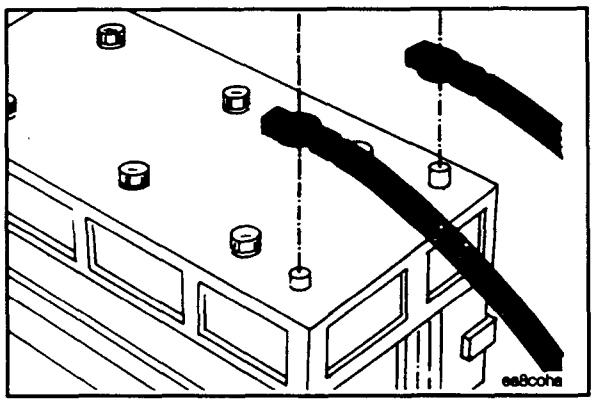


3. Disconnect the batteries to prevent accidental starting.

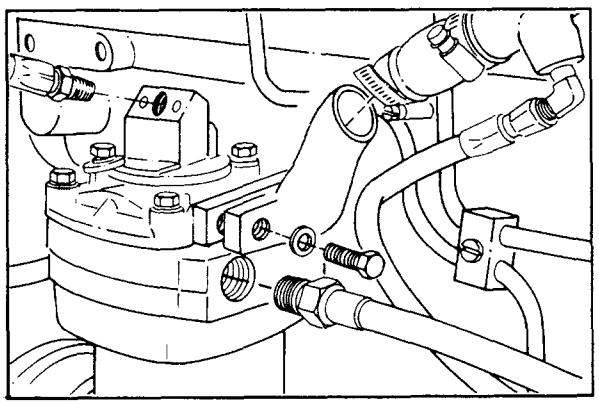

4. Remove the air inlet and outlet connections from the air compressor.

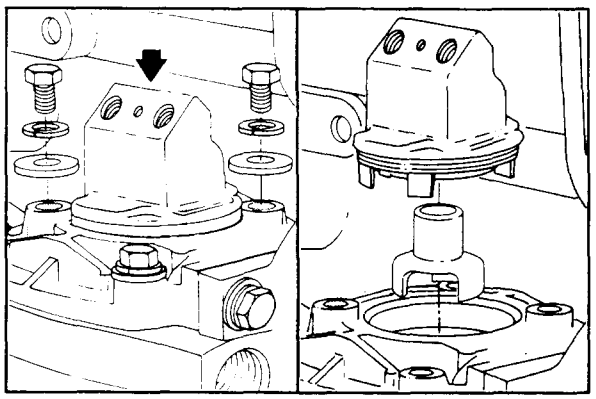

5. Remove the unloader body and all related parts. Refer to Procedure 04-10.

6. Remove the capscrews, lockwashers, and plain washers.
7. Remove the cover and discard the gasket.
8. Remove the head and discard the gasket.

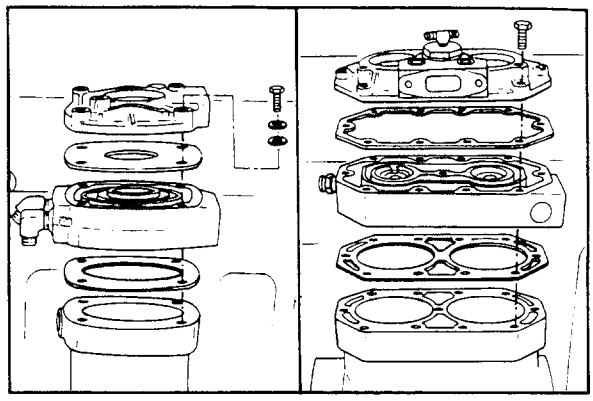

## Check for Reuse

1. Use the barring mechanism or the accessory drive to rotate the engine. Inspect the air compressor bore for excessive wear or damage.

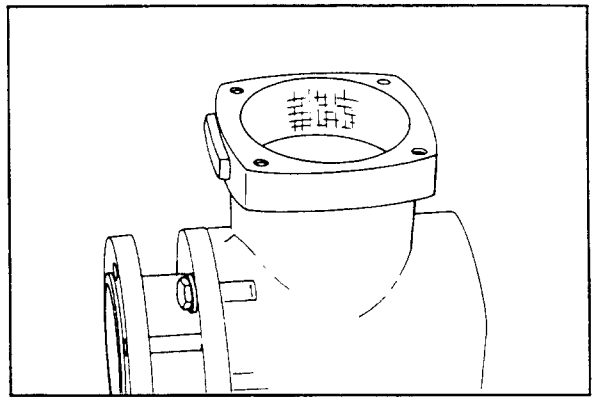

## Install

1. Use new gaskets to install the cylinder head and cover. Install the flat washers, lockwashers and capscrews.

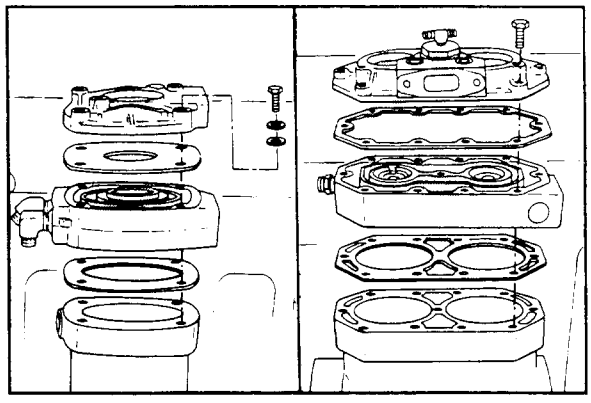

2. Tighten the cylinder head capscrews on the single cylinder compressor in an alternating sequence to the following torque values:
   a. 7 N•m [60 in-lbs]
   b. 15 N•m [10 ft-lbs]
   c. 20 N•m [15 ft-lbs]
   d. 25 N•m [20 ft-lbs]

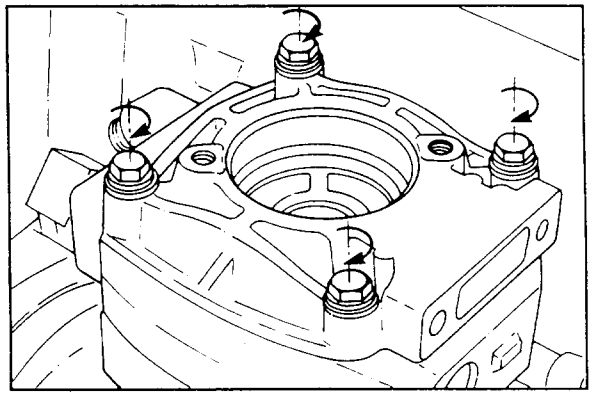

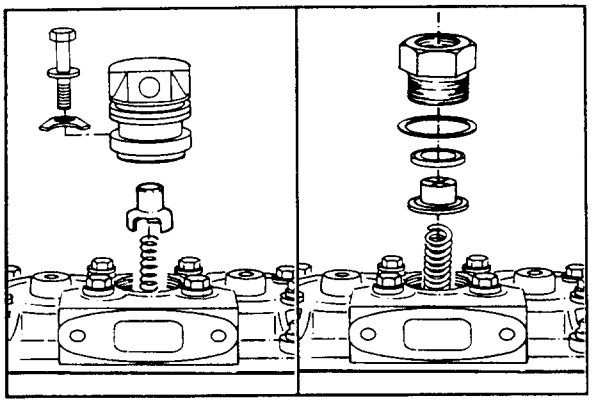

**Note:** On two cylinder air compressors, install the center unloader assembly before the cylinder head capscrews are tightened.

e. Refer to Procedure 04-10.

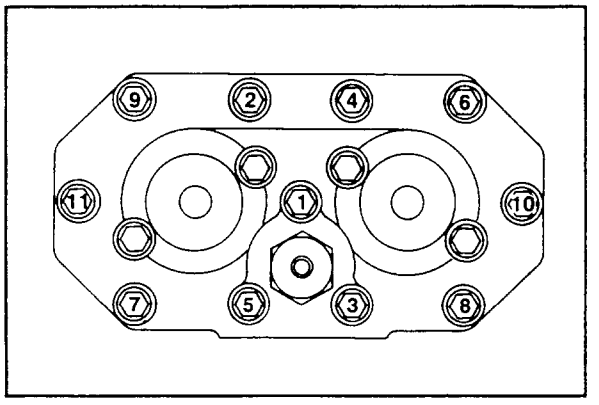


f. Tighten the cylinder head capscrews on the two cylinder air compressor, in the sequence shown and to the following values:

g. 15 N•m [10 ft-lbs]

h. 25 N•m [20 ft-lbs]

i. 40 N•m [30 ft-lbs]

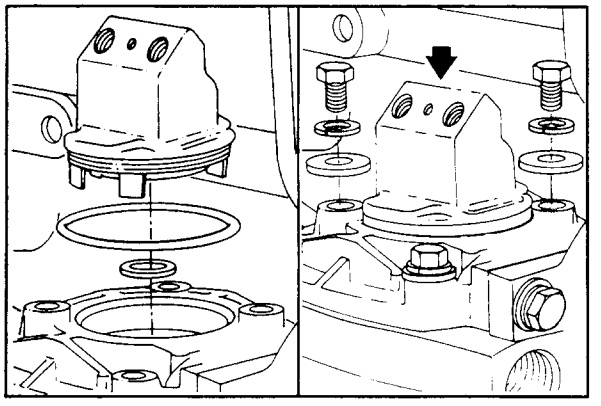

j. Install the unloader body and all related parts. Refer to Procedure 04-10.

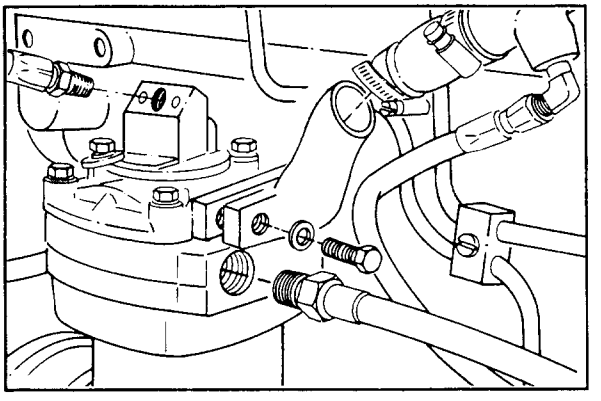

k. Install the air inlet and outlet connections. Tighten the clamps to 5.6 N•m [50 in-lbs].

l. Connect the coolant lines to the air compressor.

**Caution: If rubber grommets are used on the coolant lines, be sure they are installed carefully to prevent cuts or tears to the grommet. A damaged grommet will leak.**

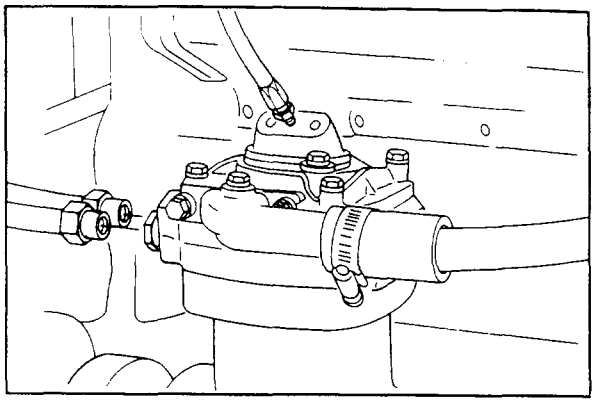

m. Connect the batteries.

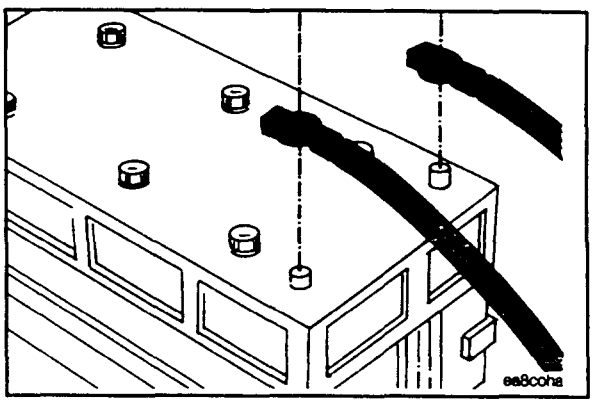


n. Fill the cooling system. Refer to Procedure 01-07.

o. Operate the engine to 70°C [160°F] coolant temperature and check for leaks.

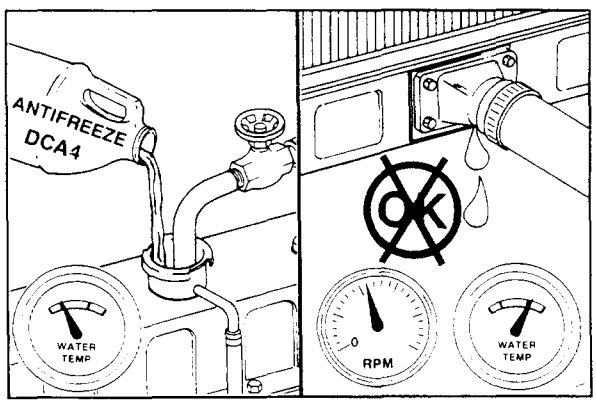


## Air Compressor (Single Cylinder) - Replace (04-15)

1. Drain the cooling system. Refer to Procedure 01-06.
2. Disconnect the coolant lines from the air compressor.

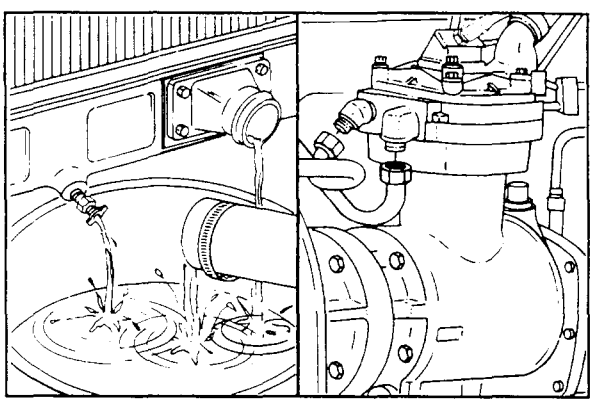

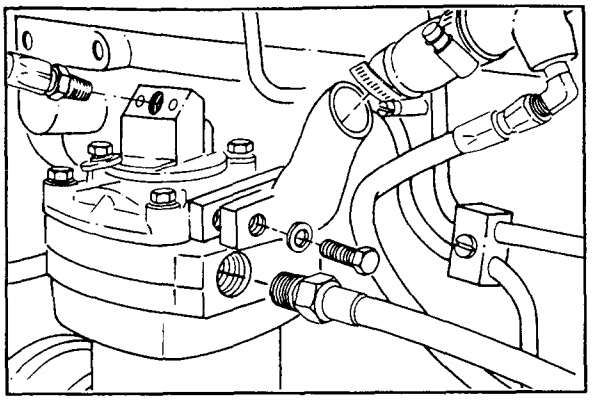

3. Remove the air inlet and outlet connections from the air compressor.

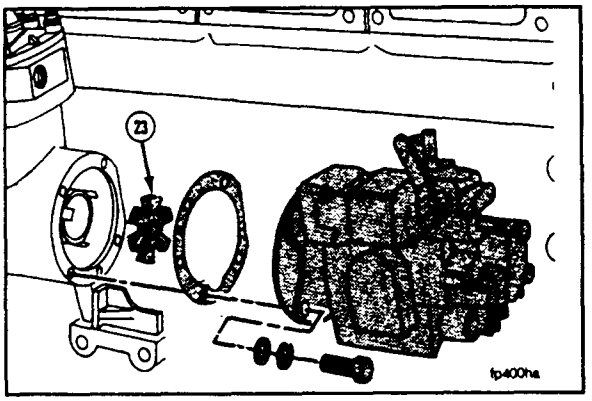


4. Remove the fuel pump. Refer to Procedure 05-11.

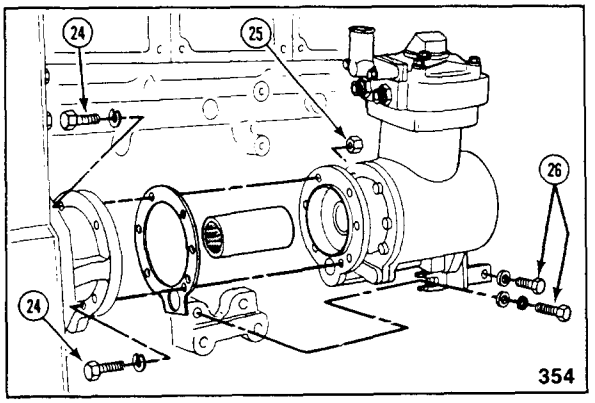


**Caution: This assembly weighs more than 23 kg [50 lb]. Handle securely to avoid dropping.**

5. Remove the air compressor support mounting capscrews (26).
6. Remove the four capscrews (24) and the nuts (25). Remove the air compressor. Remove the spline coupling. Remove and discard the gasket.

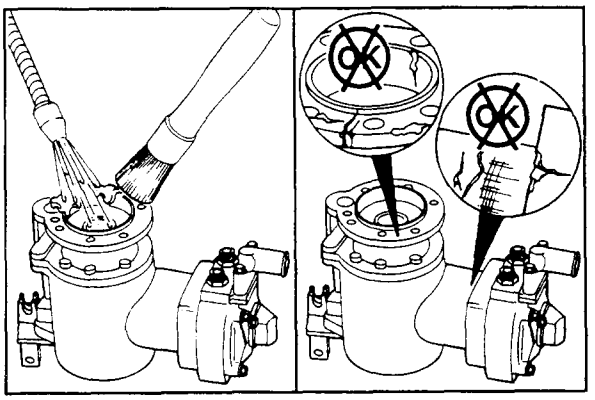

7. Clean and check the parts for reuse.

   Refer to Procedure 04-17 to check the air compressor.

## Install

1. Install the spline coupling (1), gasket, and the compressor.

**Caution: Do not tighten any capscrews until the support bracket is aligned.**

2. Install the four capscrews and two nuts (2). The capscrew (4) must be loose.

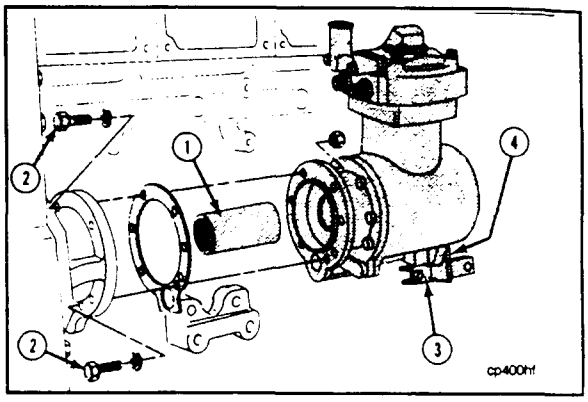


3. Install the two capscrews (5) for the bracket (3). The support bracket (3) must be flat against the block. Turn the compressor until the bracket is flat.

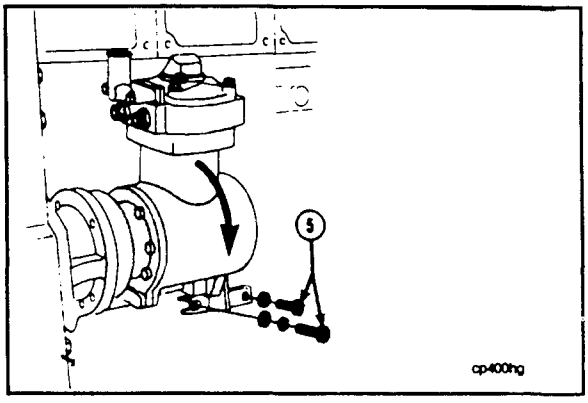


4. Tighten the compressor to the accessory drive capscrews (2) to 45 N•m [35 ft-lb].

   Tighten the bracket to the block capscrews (5) to 45 N•m [35 ft-lb].

**Caution: The bracket must be flat against the compressor.**

   Tighten the bracket to the compressor capscrew (4) to 45 N•m [35 ft-lb].

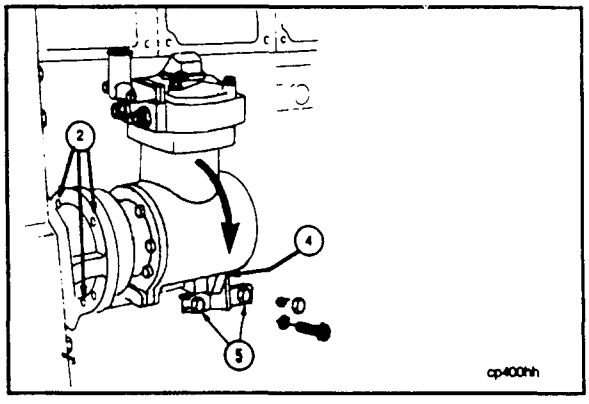


5. Install the fuel pump. Refer to Procedure 05-11.

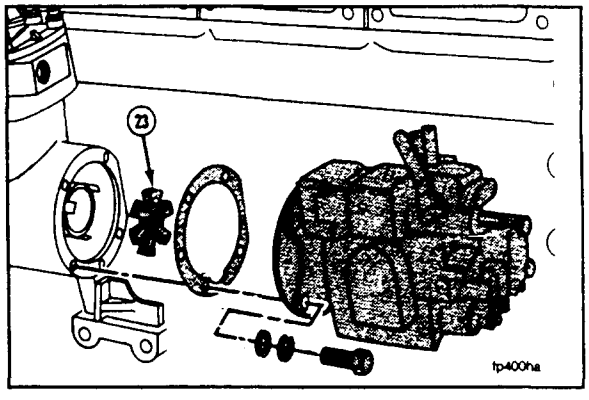

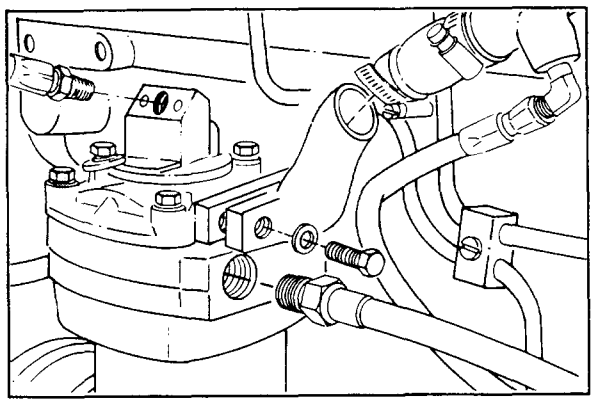

6. Install the air inlet and outlet connections to the air compressor. Tighten the clamps to 5.6 N•m [50 in-lb].

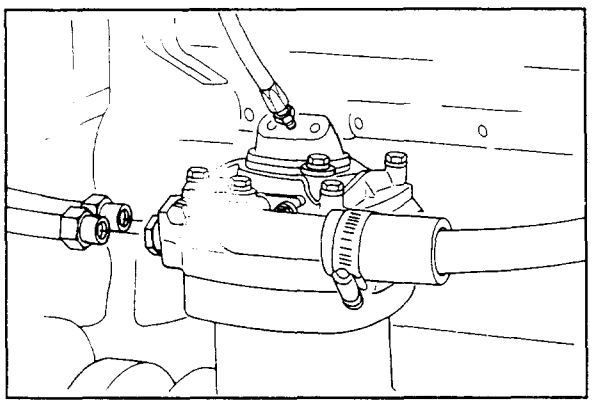

7. Install the coolant lines to the air compressor.

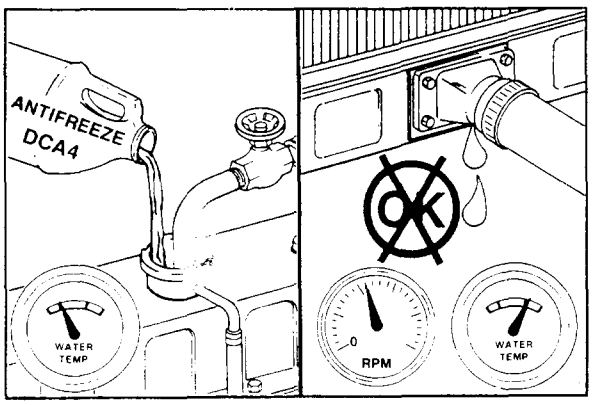


8. Fill the cooling system. Refer to Procedure 01-07.
9. Operate the engine to 70°C (160°F) coolant temperature and check for leaks.

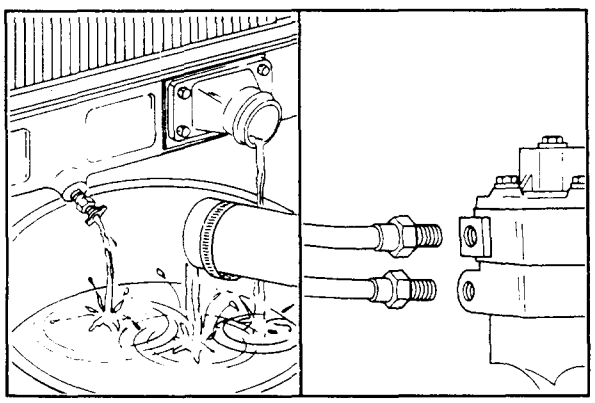

## Air Compressor (Two Cylinder) - Replace (04-16)

1. Drain the cooling system. Refer to Procedure 01-06.
2. Disconnect the coolant lines from the air compressor.

3. Remove the air inlet and outlet connections from the air compressor.

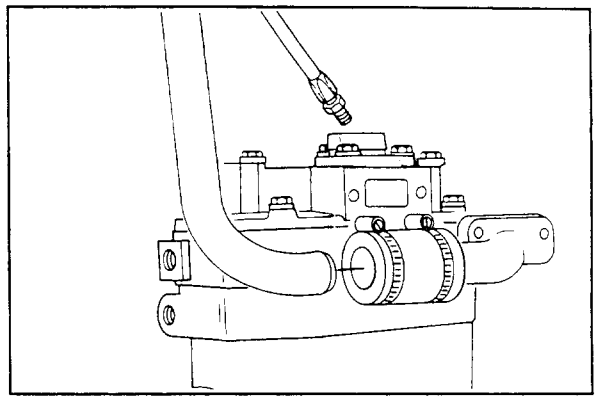

4. Remove the fuel pump. Refer to Procedure 05-11.

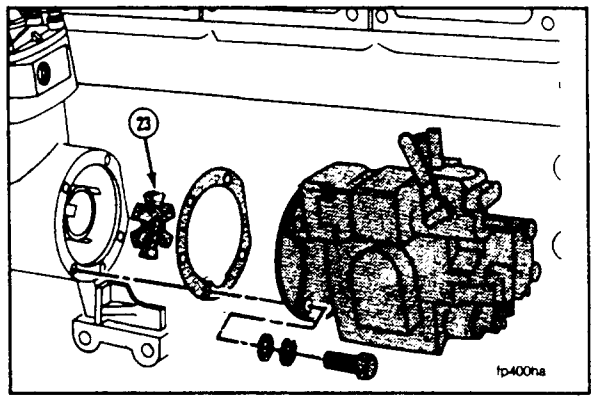


5. Remove the air compressor support mounting capscrews (5).
6. Remove the 4 capscrews (6). Remove the air compressor. Remove the splined coupling (1). Remove and discard the gasket.

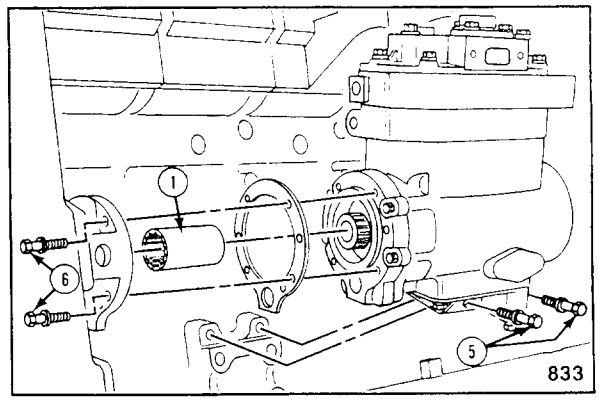


7. Clean and check the parts for reuse. Refer to Procedure 04-17 to check the air compressor.

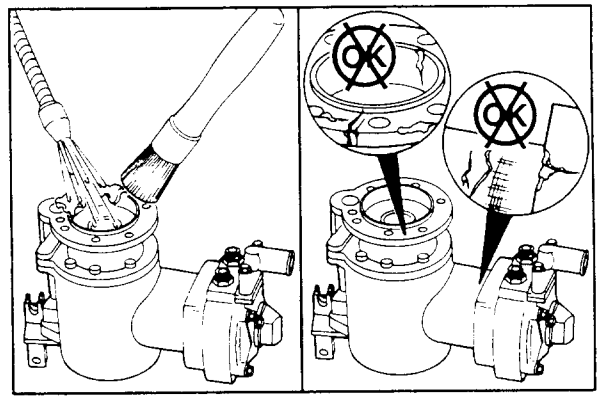

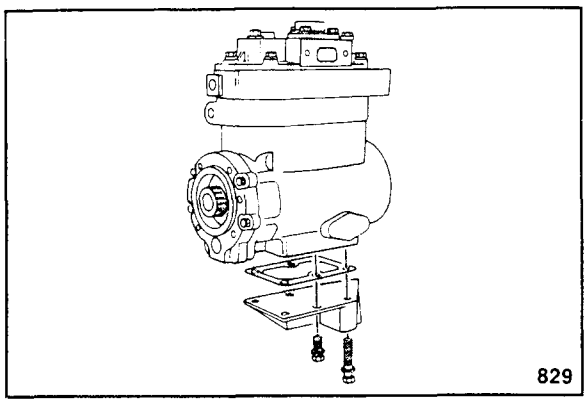


## Install

1. Install the gasket and the cover plate (support bracket) on the compressor.
2. Do not tighten the six capscrews. The support must be adjusted.

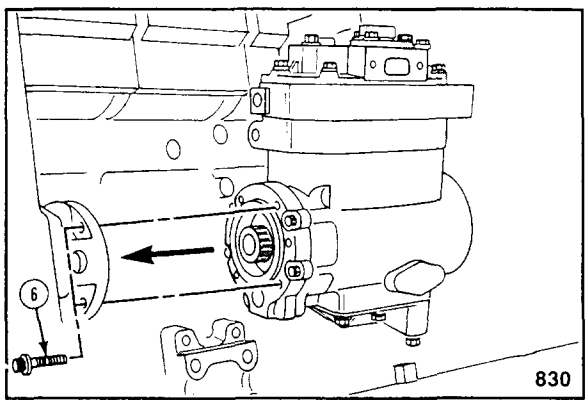


**Note:** Do not install the splined coupling or the mounting gasket.

3. Install the compressor on the accessory drive.
4. Install the four capscrews (6).

   Only tighten the capscrews enough to pull the compressor to the accessory drive. The compressor must be turned to align the support bracket.

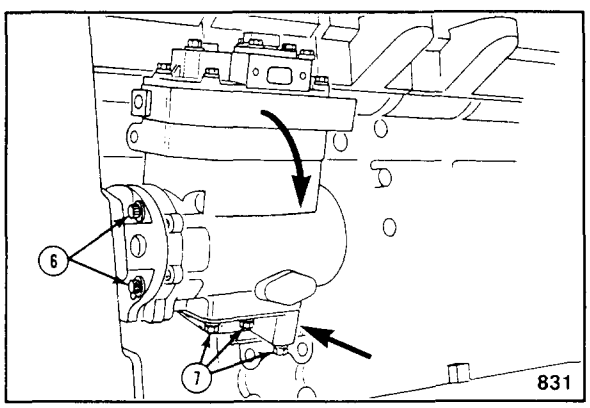


**Caution: The support must be flat against the block. Rotate the compressor until the support is aligned properly against the block.**

5. Tighten the four capscrews (6) to 60 N•m [45 ft-lb]. The bracket must remain flat against the block. Tighten the support capscrews (7) that are accessible to 45 N•m [35 ft-lb].

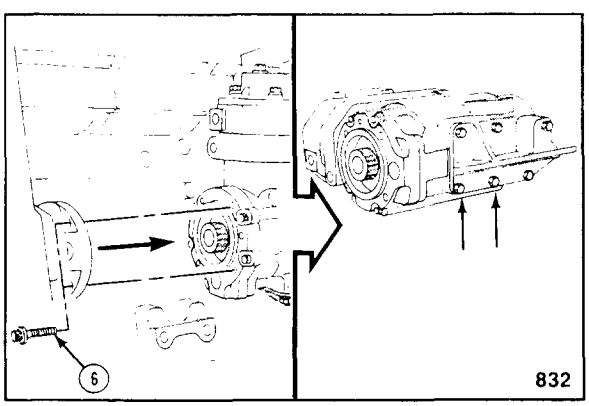


6. Remove the four capscrews (6). Remove the compressor.
7. Tighten the two remaining support to the compressor capscrews to 45 N•m [35 ft-lb].

8. Install the splined coupling (1), the gasket, and the compressor.

**Caution: The support must be flat against the block before any capscrews are tightened.**

9. Install the four capscrews (6) and two capscrews (5).

| Capscrew Torque Values | | |
|---|---|---|
| N•m | Capscrews | ft-lb |
| 60 | (6) | 45 |
| 45 | (5) | 35 |

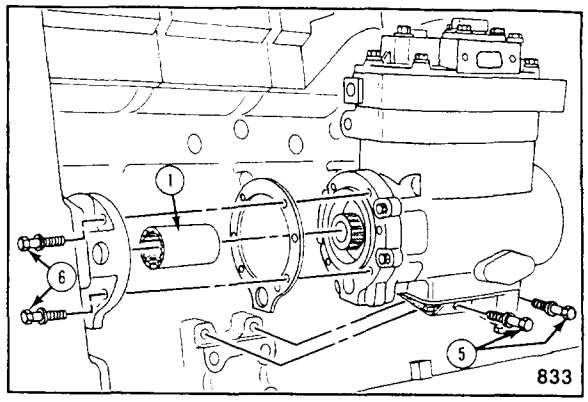


10. Install the fuel pump. Refer to Procedure 05-11.

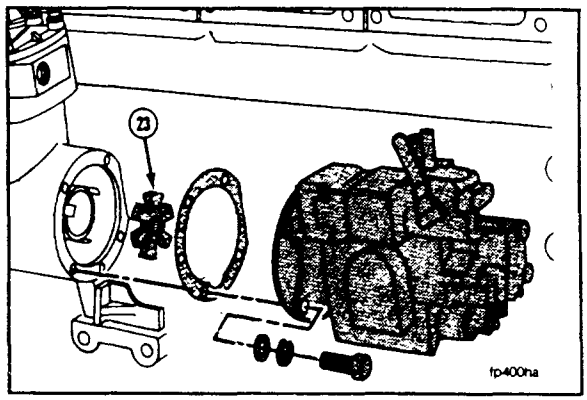


11. Install the air inlet and outlet connections to the air compressor. Tighten the clamps to 5.6 N•m [50 in-lb].

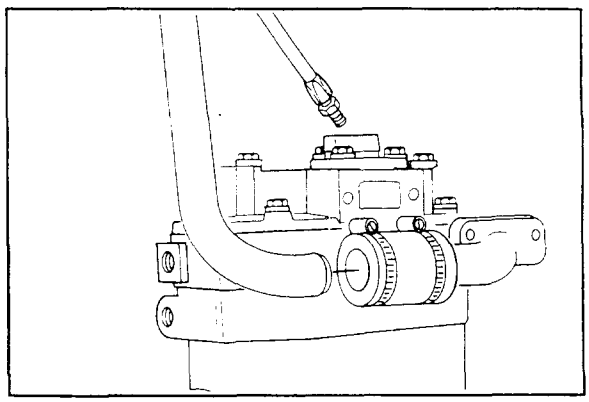

12. Install the coolant lines to the air compressor.
13. Fill the cooling system. Refer to Procedure 01-07.

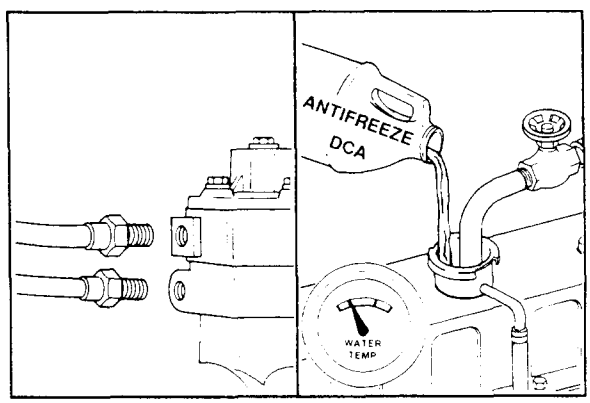

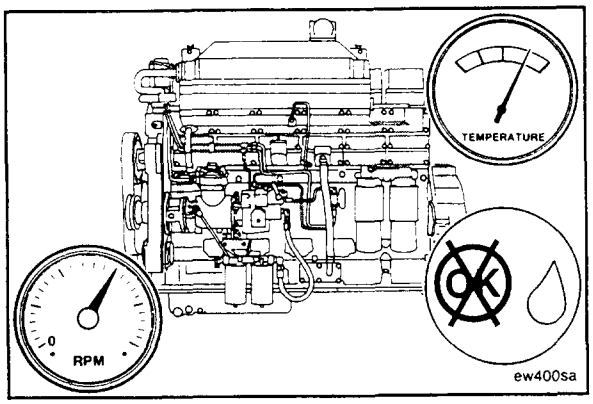


14. Operate the engine to operating temperature. Check for leaks.

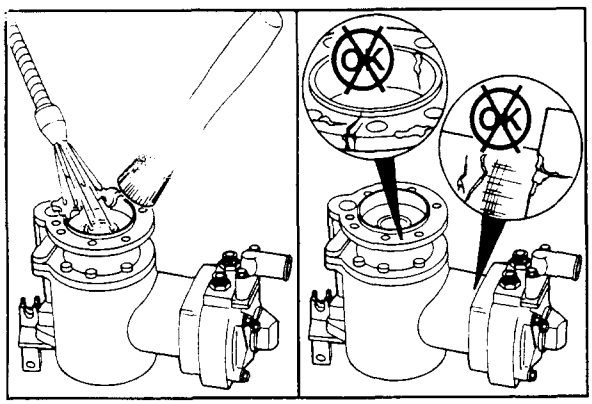


## Air Compressor - Check For Reuse (04-17)

1. Use solvent and clean the exterior of the air compressor.
2. Visually inspect the compressor housing for cracks or damage.

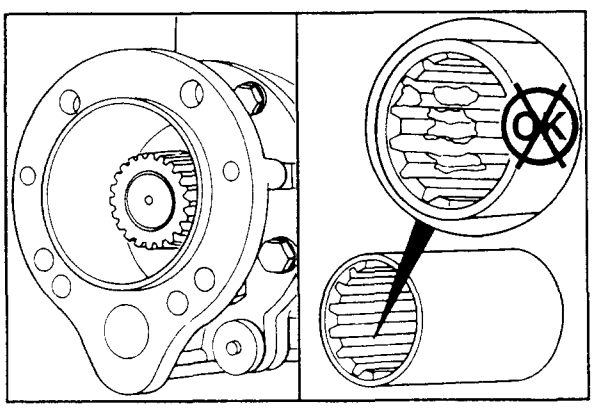


3. Visually inspect the splined coupling for cracks or damage.

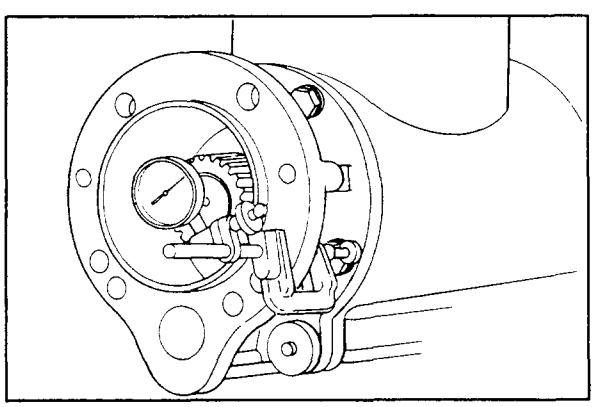

4. Check crankshaft end clearance on the single cylinder air compressor.

| End Clearance (Aluminum Support Part No. 3005153) | | |
|---|---|---|
| mm | | in |
| .05 | MIN | .002 |
| .69 | MAX | .027 |

Refer to the Single Cylinder Air Compressor Shop Manual for specifications on air compressors using a different part number support and for rebuild instructions.

5. Check the crankshaft end clearance on the two cylinder air compressor.

| End Clearance | | |
|---|---|---|
| mm | | in |
| .038 | MIN | .0015 |
| .20 | MAX | .008 |

Refer to the ST676 Two Cylinder Air Compressor Shop Manual for rebuild instructions.

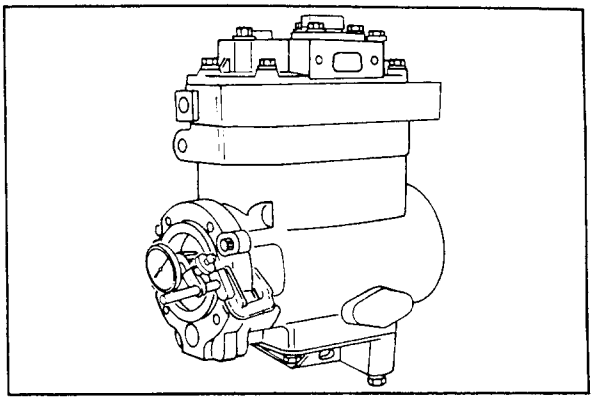

# NOTES

# Section 05 - Fuel System

## Section Contents


| | Reference No. | Page No. |
|---|---|---|
| General Information | 05-01 | 5-2 |
| Specifications | 05-02 | 5-3 |
| Flow Diagrams | 05-03 | 5-8 |
| Service Tools | 05-04 | 5-14 |


## System Troubleshooting and Repair List


| | Procedure No. | Page No. |
|---|---|---|
| Idle Speed - Check/Adjust | 05-05 | 5-19 |
| Horsepower - Measure Engine Performance | 05-06 | 5-22 |
| Fuel Rate - Adjust | 05-07 | 5-28 |
| AFC - Check/Adjust No-Air Setting | 05-08 | 5-30 |
| Injector - Replace | 05-09 | 5-34 |
| Injector - Check | 05-10 | 5-39 |
| Fuel Pump - Replace | 05-11 | 5-39 |
| Throttle Travel - Check | 05-12 | 5-43 |
| Fuel System Maintenance | 05-13 | 5-44 |
| Gear Pump Check Valve - Replace | 05-14 | 5-47 |
| Variable Speed Governor Leaking Fuel | 05-15 | 5-48 |
| Fuel Shutoff Valve | 05-16 | 5-51 |
| Fuel Pump - Flow Check and Prime | 05-17 | 5-53 |
| Fuel Pump - Check Rotation | 05-18 | 5-55 |
| Air Leaks | 05-19 | 5-56 |
| AFC - Check for Air Leaks | 05-20 | 5-60 |
| Cylinder Misfire | 05-21 | 5-64 |
| Engine Oil Dilution by Fuel Oil | 05-22 | 5-65 |
| Fuel Line Restriction (Suction) | 05-23 | 5-69 |
| Fuel Line Restriction (Drain) | 05-24 | 5-71 |
| STC Oil Control Valve - Check | 05-25 | 5-73 |
| STC Fuel Pressure Switch - Check | 05-26 | 5-75 |
| STC Wiring Harness - Check | 05-27 | 5-76 |
| STC Oil Control Valve - Replace | 05-28 | 5-77 |
| STC Wiring Harness - Replace | 05-29 | 5-79 |
| Fuel Consumption Check | 05-30 | 5-79 |
| Low Power Check | 05-31 | 5-84 |
| Engine Stall Speed and Time Check | 05-32 | 5-86 |
| Fuel Manifold - Replace | 05-33 | 5-90 |
| Oil Manifold - Replace | 05-34 | 5-92 |
| Stall Speed Check List | 05-35 | 5-93 |
| Driveability - Low Power Check List | 05-36 | 5-95 |
| Fuel Consumption Check List | 05-37 | 5-98 |

# Fuel System - General Information (05-01)

The PT fuel system is used exclusively on Cummins Diesels. The identifying letters, "PT", are an abbreviation of "pressure-time."

The PT Fuel System consists of the fuel pump, supply lines, drain lines, fuel passages, and injectors.

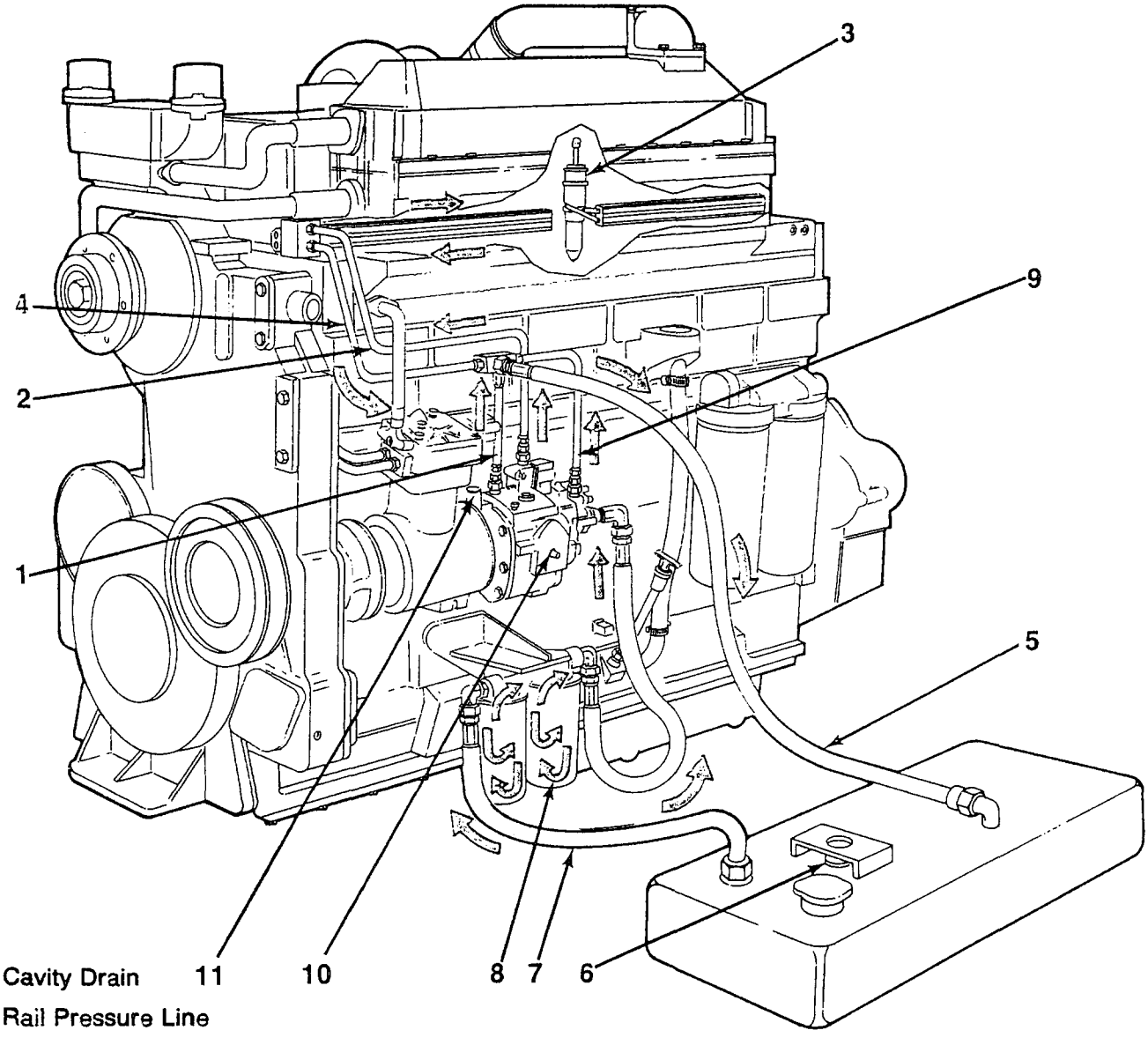


1. AFC Cavity Drain
2. Fuel Rail Pressure Line
3. Injector
4. Injector Fuel Drain Return
5. Fuel Return to Tank
6. Fuel Tank Breather
7. Fuel Inlet Supply
8. Fuel Filter
9. Gear Pump Coolant Drain
10. Fuel Pump
11. Tachometer Drive

# Fuel System Specifications (05-02)

## Basic Application Requirements

Engine Idle Speed ..... 650 to 725 RPM

Fuel Inlet Maximum Restriction

- Clean Fuel Filter ..... 100 mm Hg. (4.0 inch Hg.)
- Dirty Fuel Filter ..... 200 mm Hg. (8.0 inch Hg.)

Fuel Drain Line Maximum Restriction

- Without Check Valves ..... 65 mm Hg. (2.5 inch Hg.)
- With Check Valves ..... 165 mm Hg. (6.5 inch Hg.)

Fuel Check Valve between Fuel Filter and Fuel Pump

- Minimum Opening Pressure ..... 2.1 kPa (0.3 psi)

Fuel Check Valve between Fuel Pump and Cylinder Head

- Opening Pressure ..... 21 to 55 kPa (3 to 8 psi)

Engine Minimum Cranking Speed ..... 150 RPM

Fuel Check Valve in Fuel Drain Line

- Opening Pressure ..... 13 to 25 mm Hg. (1/4 to 1/2 psi)

Derate Engine Fuel Rate for High Altitude ..... 4% per 300 M (1000 ft) above 3600 m (12,000 ft.)

Derate Engine Fuel Rate for Hot Weather ..... 2% per 11°C Above 38°C (1% per 10° above 100°F)

Shutoff Valve Solenoid Coil Resistance in Ohms

6VDC ..... 1.72 - 2.02

12VDC ..... 7.0 - 8.0

24VDC ..... 28 - 32

32VDC ..... 49.5 - 56.5

36VDC ..... 54.5 - 61.5

48VDC ..... 105 - 125

115VDC ..... 645 - 735

## Installation Publications

The following publications are available to provide fuel system installation recommendations approved by Cummins Engine Company, Inc.:

1. Automotive Installation Recommendations (Fuel System), Bulletin No. 952849.
2. Construction, Mining, Logging, and Agriculture Installation Recommendations (Fuel System), Bulletin No. 3382015.
3. Parts and Service Publications can be purchased from:

   Literature Control Service
   10003 Bunsen Way
   P. O. Box 99085
   Louisville, KY 40299

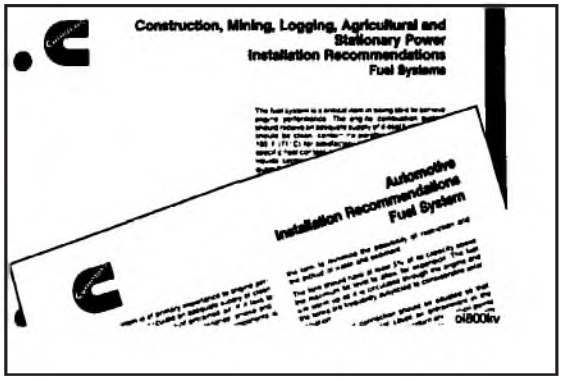

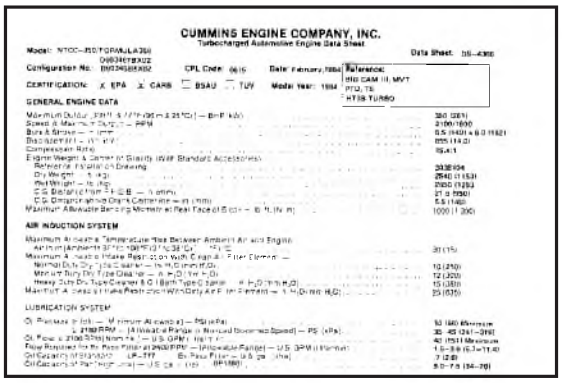


4. Contact the nearest Cummins authorized repair location for engine fuel system specifications and requirements provided on the ''Engine Data Sheet'' for your specific engine and application.

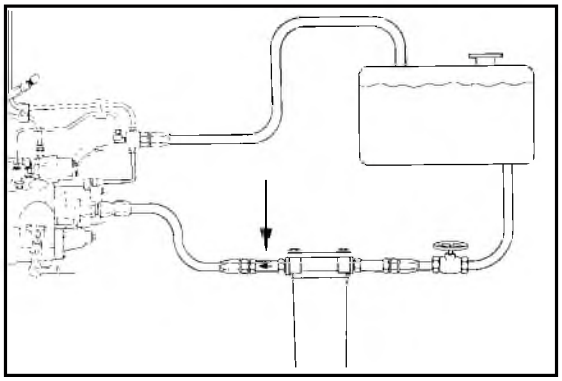

## Overhead Tank Installation Requirements

1. If the fuel filter is lower than the fuel tank, install a check valve in the filter outlet fuel line. See the Installation Recommendations.
2. The check valve on the outlet side of the fuel filter prevents gear pump fuel drainback.
3. Install a fuel shut off valve between the filter and the fuel tank.

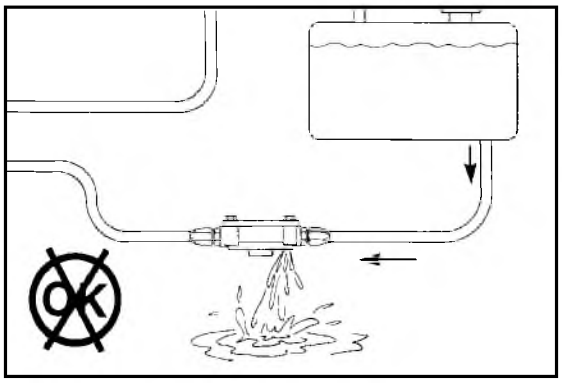

**Warning: If the fuel line shutoff valve is not used, the overhead tank can drain when the fuel filter is changed. Spilled fuel is a fire hazard.**

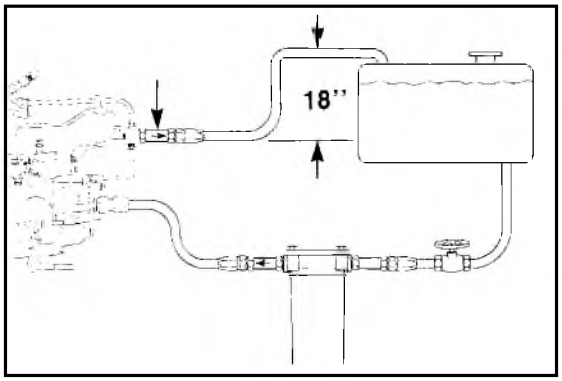


4. Install a check valve in the fuel drain line when the maximum fuel level in the fuel tank is even or above the fuel drain that is in the cylinder head. Install the valve with the fuel flow arrow toward the fuel tank.

When the maximum fuel level is above the injector drain, install the check valve in the fuel line between the fuel pump and the cylinder head with arrow pointed toward the cylinder head.

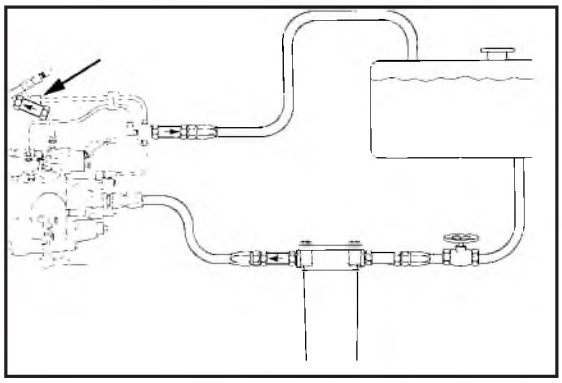

**Caution: If the fuel line check valves are not used, an engine cylinder can be filled with fuel. This can cause a hydraulic lock in the cylinder.**

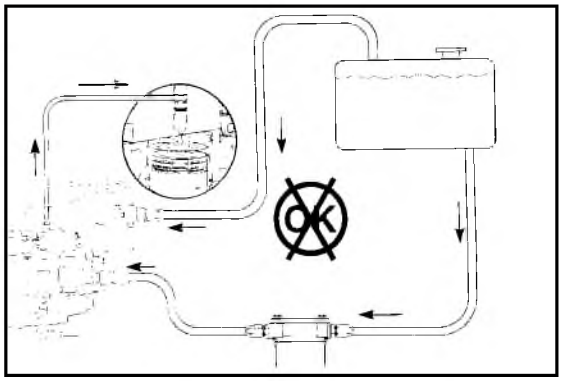

Install the check valve in the AFC air connection when an overhead tank is required.

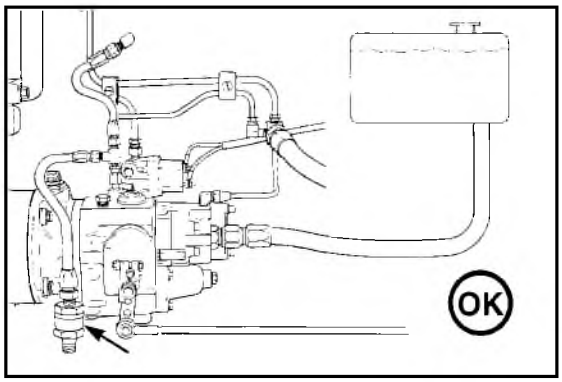


**Caution: If the air connection check valve is not in use and the AFC bellows has a hole, fuel can go up the AFC air hose and into the cylinders. This can cause a hydraulic lock in the cylinder.**

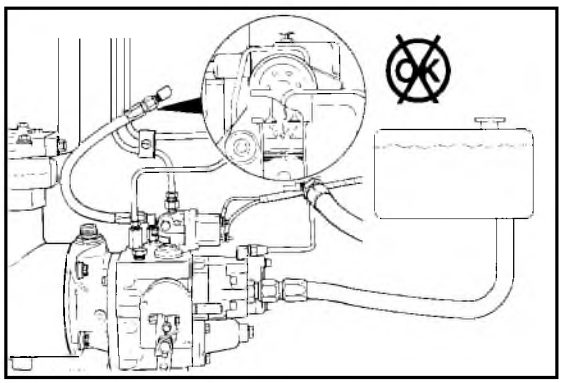

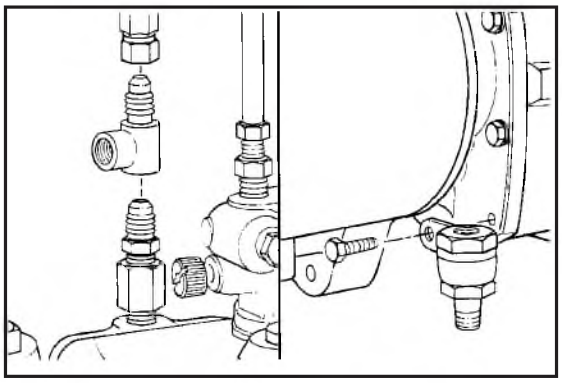

## Air Connection Check Valve Installation

1. Install a pipe tee in the AFC air connection in the AFC cover.
2. Install the pipe clamp that holds the check valve on the lower front cover capscrew.

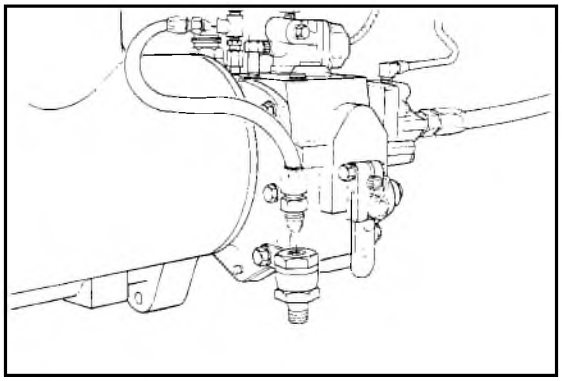

3. Install a No. 4 hose between the tee and the valve.

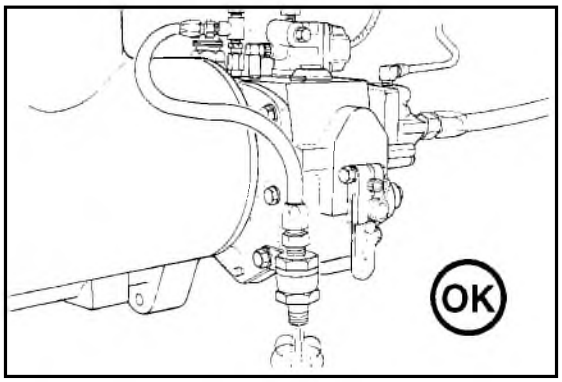


4. When the engine is operating, a small amount of air (turbocharger pressure) will come out of the bottom of the valve.

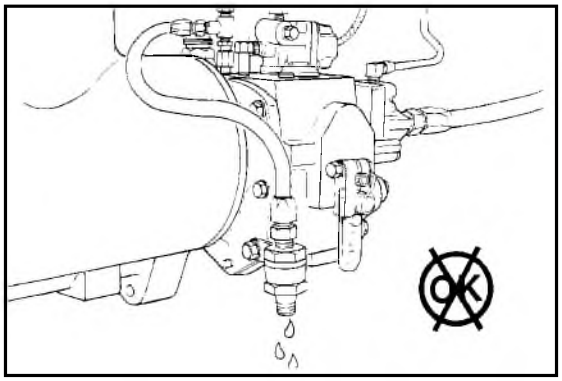

5. If the AFC bellows fails, fuel will drain out of the valve.

## Fuel Oil Recommendations

Cummins diesel engines have been developed to take advantage of the high energy content and generally lower cost of No. 2 diesel fuels. A Cummins diesel engine will also operate satisfactorily on No. 1 fuels or other fuels within the following specifications.

## Fuel Oil Recommended Properties:

| | |
|---|---|
| **Viscosity (ASTM D-445)** | 1.3 to 5.8 CentiStoke (1.3 to 5.8 $mm^2$ per second) at 40°C [104°F]. |
| **Cetane Number (ASTM D-613)** | 40 minimum **except** in cold weather or in service with prolonged low loads, a higher cetane number is desirable. |
| **Sulfur content (ASTM D-129 or 1552)** | **Not** to exceed 1% by weight. |
| **Water and Sediment (ASTM D-1796)** | **Not** to exceed 0.1% by weight. |
| **Carbon Residue (Ransbottom ASTM D-524 or D-189)** | **Not** to exceed 0.25% by weight on 10% residue. |
| **Flash Point (ASTM D-93)** | 52°C [125°F] minimum. Certain marine registries requires higher flash points. |
| **Density (ASTM D-287)** | -1 to 6°C [30 to 42°F] A.P.I. at 16°C [60°F] (0.816 to 0.876 Sp. Gr.) |
| **Cloud Point (ASTM D-97)** | 5.6°C [10°F] below lowest temperature expected to operate. |
| **Active Sulfur-Copper Strip-Corrosion (ASTM D-130)** | **Not** to exceed No. 2 rating after 3 hours at 50°C [122°F]. |
| **Ash (ASTM D-482)** | **Not** to exceed 0.02% by weight. |
| **Distillation (ASTM D-86)** | The distillation curve should be smooth and continuous. At least 90% of the fuel should evaporate at less than 360°C [680°F]. All of the fuel should evaporate at less than 385°C [725°F]. |

# Fuel System Flow Diagrams (05-03)

## Fuel Flow Through Fuel Pump

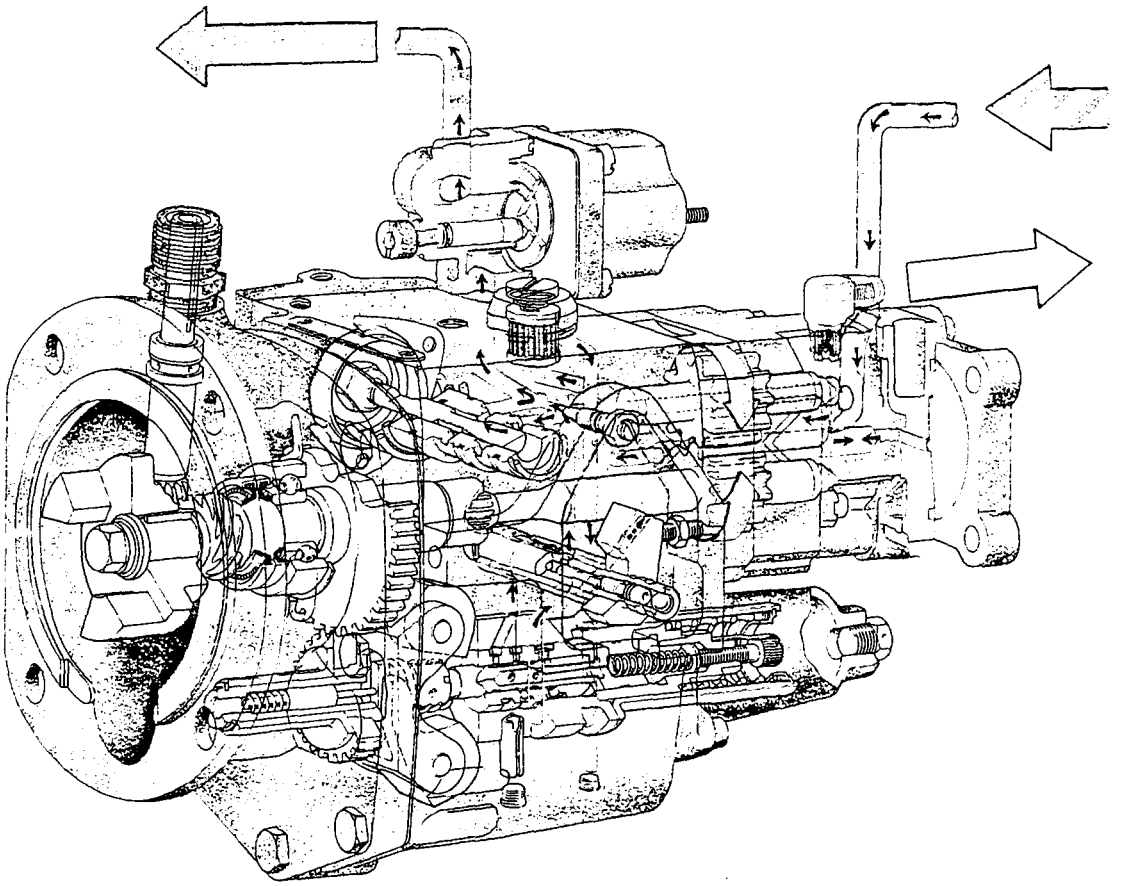

## PT (Type G) AFC Connection And Adjustment Locations

1. Tachometer Drive
2. AFC Fuel Return
3. AFC Air Supply
4. Priming Plug
5. Fuel to the Injector
6. Shutoff Valve Electric Connection
7. Gear Pump Fuel Return
8. Fuel Inlet Connection
9. Idle Speed Screw Location
10. Fuel Rate (Pressure) Screw

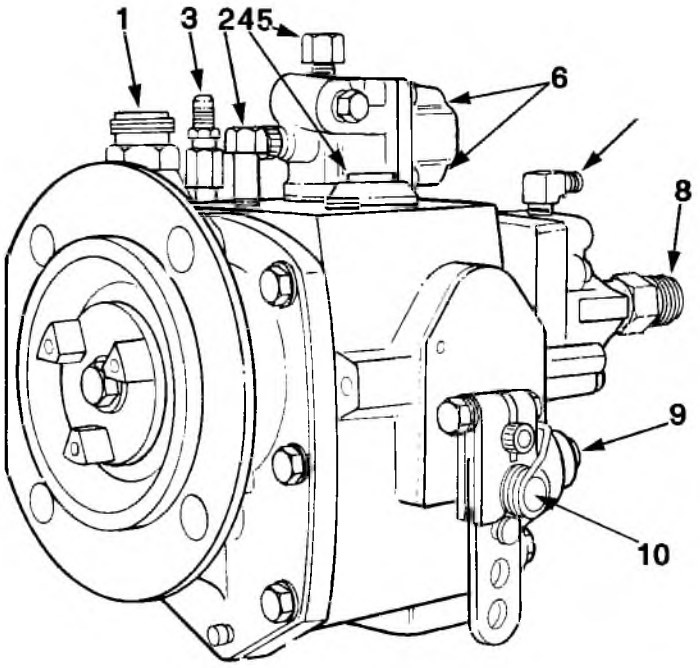


## PT (Type G) AFC-VS Connection And Adjustment Locations

1. Tachometer Drive
2. AFC Air Supply
3. Fuel to the Injectors
4. VS High Speed Screw
5. VS Low (Idle) Speed Screw
6. Gear Pump Fuel Return
7. Fuel Inlet Connection
8. Idle Speed Screw Location
9. Fuel Rate (Pressure) Screw

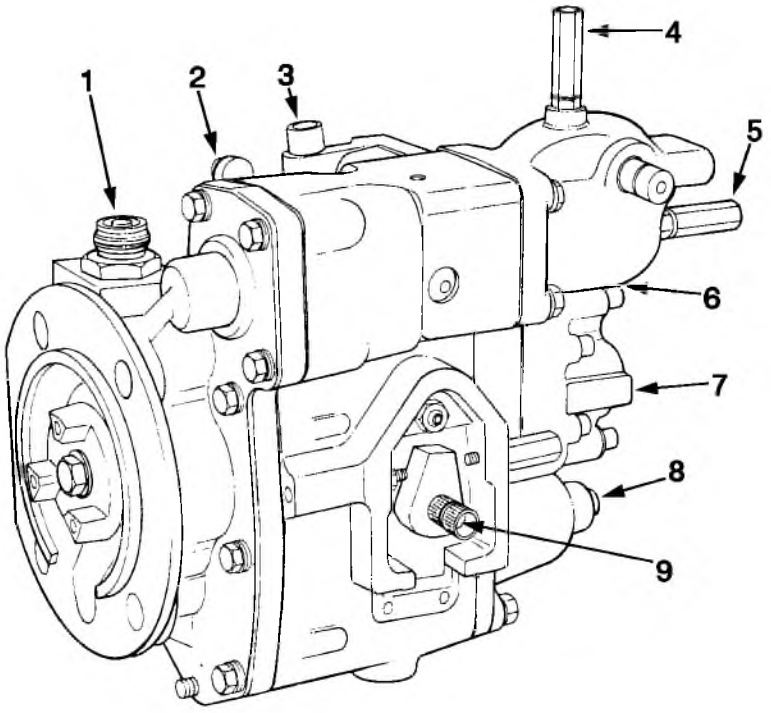

## Injector Drive Train (Without STC)

1. Injector
2. Injector Link
3. Rocker Lever
4. Push Rod
5. Cam Follower
6. Camshaft

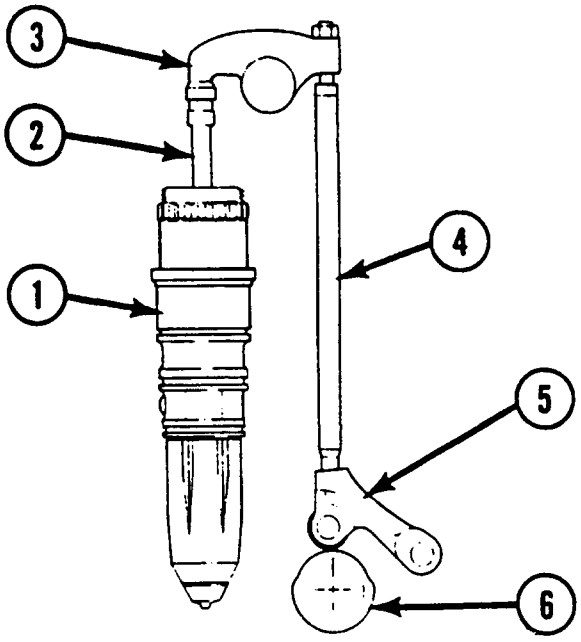


## Injector Drive Train (With STC)

1. Injector
2. STC Tappet
3. Injector Link
4. Rocker Lever
5. Push Rod
6. Banjo Tube
7. Oil Manifold
8. Oil Control Valve
9. Fuel Pressure Switch
10. Cam Follower
11. Camshaft

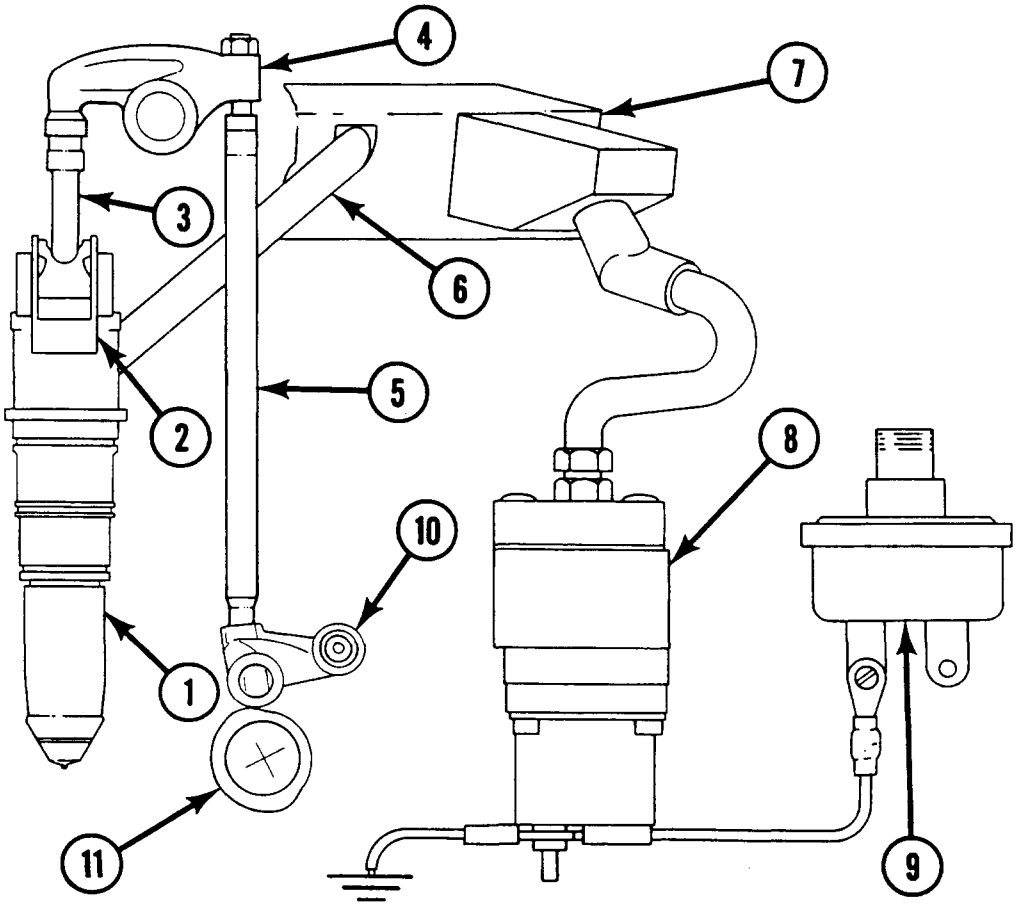

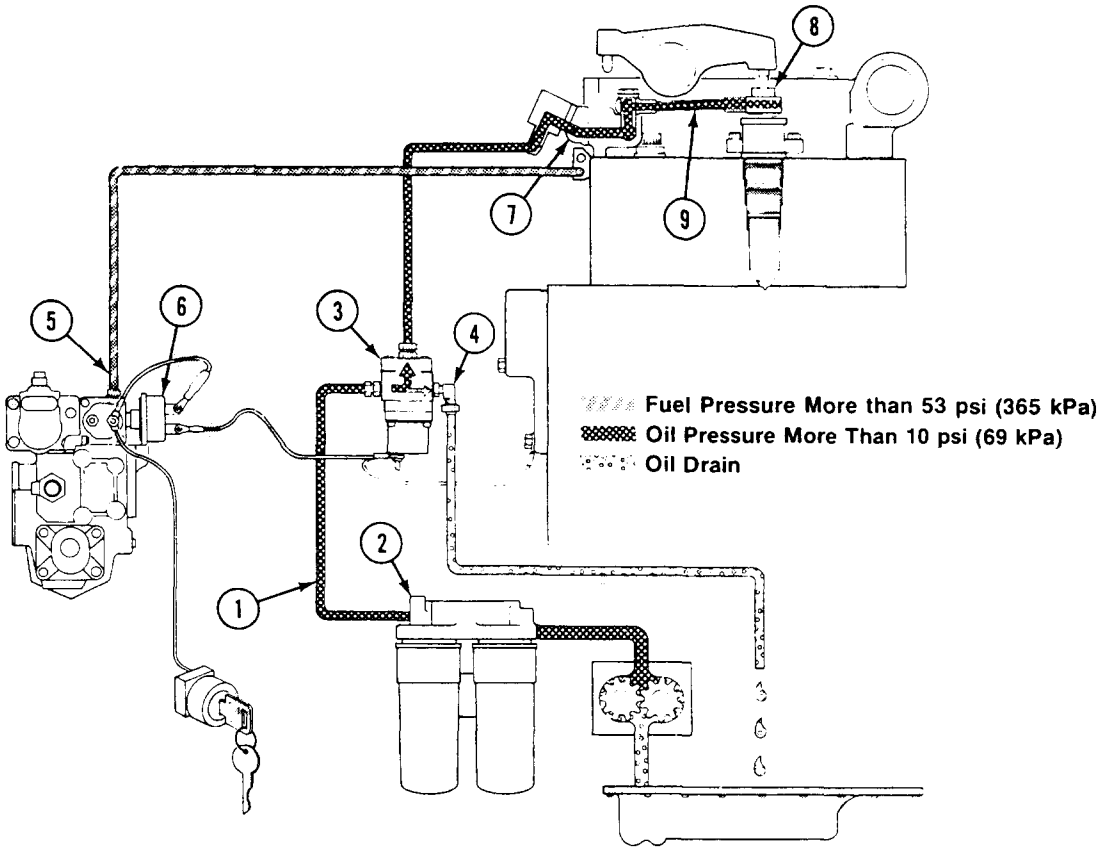


## STC Oil Flow (Advanced Timing)

| Ref. No. | Description | Ref. No. | Description |
|---|---|---|---|
| (1) | Oil Supply to Oil Control Valve | (6) | Fuel Pressure Switch |
| (2) | Oil Filter Head | (7) | Oil Manifold |
| (3) | Oil Control Valve | (8) | STC Tappet |
| (4) | Pressure Relief Valve | (9) | Oil Transfer Connection |
| (5) | Fuel Supply to Injectors | | |

1. When the engine fuel pressure (5) is less than 53 psi [365 kPa], the fuel pressure switch (6) is **closed** and the STC oil control valve (3) is **open.**
2. Engine oil, under pressure, flows from the oil filter head (2) to the **open** oil control valve (3).
3. The pressure relief valve (4) returns a small amount of oil to the oil pan.
4. The oil flows from the control valve to the oil manifold (7).
5. The oil flows from the oil manifold through the oil transfer connection (9) and into the STC Tappet Assembly (8).
6. The tappet fills with oil and causes the injection timing to be advanced. The oil is held within the tappet by the inlet check ball and load cell check ball during the injection cycle.
7. At the end of the injection cycle the increased oil pressure within the tappet moves the load cell check ball from its seat. The oil drains from the tappet through the drain holes in the injector adapter.
8. The oil returns to the oil pan through the drain passages in the cylinder head and cylinder block.

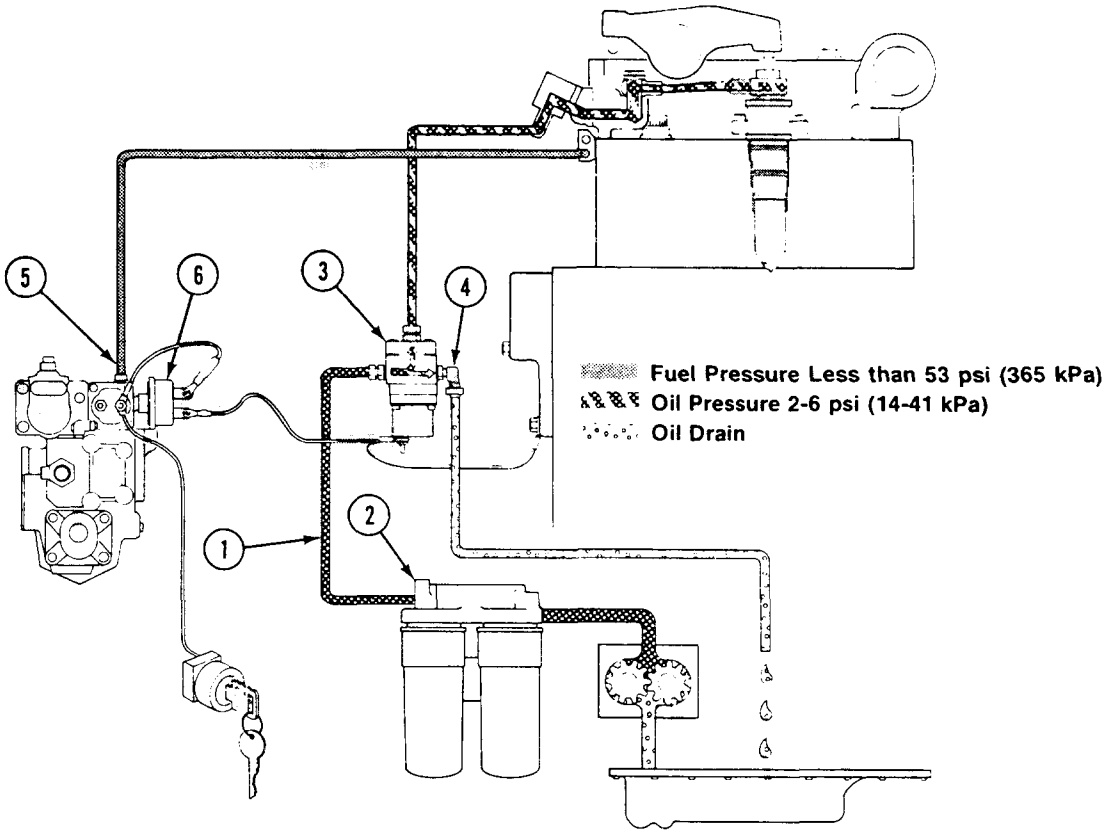


## STC Oil Flow (Normal Timing)

| Ref. No. | Description | Ref. No. | Description |
|---|---|---|---|
| (1) | Oil Supply to Oil Control Valve | (4) | Pressure Relief Valve |
| (2) | Oil Filter Head | (5) | Fuel Supply to Injectors |
| (3) | Oil Control Valve | (6) | Fuel Pressure Switch |

1. When the engine fuel pressure (5) is more than 53 psi [365 kPa], the fuel pressure switch (6) is **open** and the STC oil control valve (3) is **closed**.
2. Engine oil, under pressure, flows from the oil filter head (2) to the closed oil control vlave (3).
3. The pressure relief valve (4) prevents the oil pressure in the oil manifold from exceeding 6 psi [41 kPa]. The oil pressure in the manifold **must** be 10 psi [69 kPa] or more to flow into the tappet. Normal injection timing is achieved when the tappet is **not** filled with oil.

## Step Timing Control (STC); previously referred to as Hydraulic Variable Timing (HVT)

The Step Timing Control (STC) system allows an engine to operate with **advanced** injection timing under a **light** load condition at any engine speed. STC allows an engine to operate with **normal** injection timing under a **heavy** load condition.

Injection timing is changed by supplying engine oil in metered amounts to a hydraulic tappet located on the injector. When the tappet is **filled** with engine oil the injection timing is **advanced**. When the tappet is **not filled** with engine oil the injection timing is to the normal mode.

When the fuel rail pressure **exceeds** 365 kPa [53 psi], the injection timing will change from the **advanced** mode to the **normal** mode. When the fuel rail pressure **drops below** 159 kPa [23 psi], the injection timing will return from the **normal** mode to the **advanced** mode. It will remain in the **advanced** mode until the fuel rail pressure **exceeds** 365 kPa [53 psi] again.

The STC tappet assembly contains a plunger and sleeve that are machined to a very precise tolerance. The assembly is then matched by a selection process at the Factory (match-fit). **Never** interchange or mix the plungers and the sleeves.

The tappet assembly and injector are not matched sets. The tappet assembly can be used in any STC injector. Cummins Engine Company, Inc., recommends STC tappet disassembly **ONLY** if there is evidence that the debris that caused the failure has moved beyond the full-flow oil filters. Any debris in the tappet will adversely effect the tappet operation.

The method of adjusting the injection timing and injector rocker lever travel on engines **with** STC is the same as the method used on engines **without** STC. The specification for injector travel and injection timing on engines **with** STC is different than engines **without** STC.

The fuel pressure switch is compatible with **both** the 12 volt and the 24 volt system. The fuel pressure switch is normally in the "CLOSED" position. The switch will be in the "OPEN" position when the fuel rail pressure exceeds 365 kPa [53 psi]. One terminal of the switch is wired to the positive terminal of the fuel pump shutoff valve. The second terminal is wired to the positive terminal on the STC oil control valve.

A STC oil control valve is available for **either** the 12 volt **or** the 24 volt system. It is normally in the "CLOSED" position. The valve will be in the "OPEN" position to allow the oil to flow to the STC oil manifold when the solenoid is energized.

The STC pressure relief valve contains a 0.51mm [0.020 inch] orifice to control the flow of the oil to the STC oil manifold during **normal** injection timing. A 14 kPa to 40 kPa [2 psi to 6 psi] check ball maintains a supply of pressurized oil in the oil manifold to prevent air from entering the system during the **normal** mode.

The wiring harness receives power from the fuel pump solenoid. The wiring will send signals from the fuel rail pressure switch to the oil control valve. A diode is contained in the wiring harness. The wires and the diode can be checked for defects by using a volt-ohmmeter, Part No. 3376303, or any volt-ohmmeter (VOM) that has a rating of 10,000 ohm per volt or greater.

# Service Tools for Fuel System (05-04)

The following special tools are recommended to perform the procedures in Section 05. The use of these tools is shown in the appropriate procedure. These tools can be purchased from your local Cummins Authorized Repair Location.

| Tool No. | Tool Description | Tool Illustration |
|---|---|---|
| ST-434 | **Vacuum Gauge**<br>Measure fuel pump inlet restriction. Includes Part No. 3375845 Hose Adapter (No. 12 Hose) and Part No. ST-434-2 Hose Adapter (No. 10 Hose). | 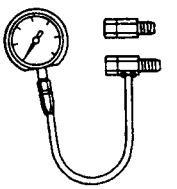 |
| ST-998<br>3375362<br>3375808 | **Fuel Sight Glass**<br>Check for air in fuel suction line. Use Part No. ST-988 with No. 10 hose, 3375362 with No. 12 Hose, and 3375808 with No. 16 Hose. | 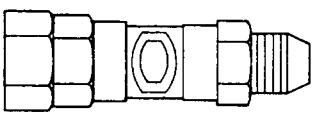 |
| ST-774 | **Tachometer**<br>Measure engine rpm. | 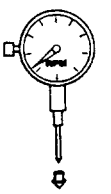 |
| 3375631 | **Digital Tachometer**<br>Measure engine rpm. | 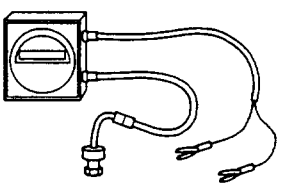 |
| 3377462 | **Optical Tachometer**<br>Measure engine rpm. | 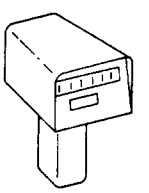 |
| 3376869 | **Rocker Lever Actuator**<br>Depress injector rocker lever to check injector travel setting. | |

| Tool No. | Tool Description | Tool Illustration |
|---|---|---|
| 3375049 | **Filter Wrench**<br>Remove fuel filter. | 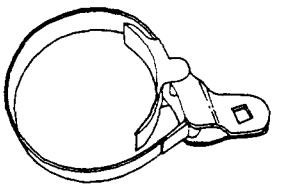 |
| ST-435 | **Engine Rail Pressure Gauge**<br>Measure fuel pump pressure. Includes necessary hoses and hardware to attach to a fuel pump. | 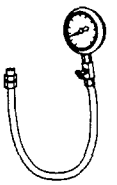 |
| 3376375 | **Fuel Measuring Device**<br>Measure fuel rate on engine. | 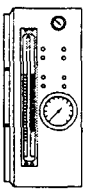 |
| 3376506 | **Remote Starter Switch**<br>Turn engine on and off from a remote location. | 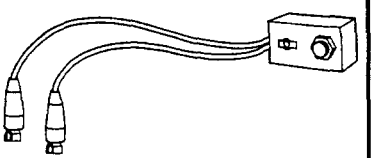 |
| 3375981 | **Fuel Pump Idle Speed Adjusting Tool**<br>Adjust automotive idle setting. | 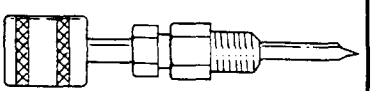 |
| ST-1273 | **Pressure Gauge**<br>Measure injector drain line restriction. | 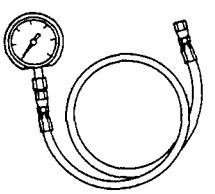 |
| 3375515 | **Control Pressure Pump**<br>Check AFC setting. | |
| 3377253 | **Black Light (A.C.)**<br>Locate fuel leaks. | 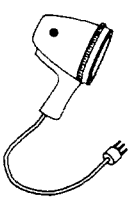 |

| Tool No. | Tool Description | Tool Illustration |
|---|---|---|
| 3377394 | **Black Light (D.C.)**<br>Locate fuel leaks. | 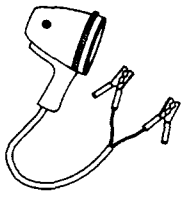 |
| 3376891 | **Flourescent Tracer**<br>Put in engine oil or fuel. Use black light to find oil or fuel leaks. | 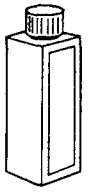 |
| | | |
| | | |
| | | |
| | | |
| | | |
| | | |

## Proper Use of Fuel System Gauges

**NOTE:** To be sure the reading is correct, always remove the air from the pressure gauge line before taking a reading.

1. Loosen the connection at the gauge to remove the air.

**NOTE:** Do not loosen the vacuum gauge connections when the engine is operating.

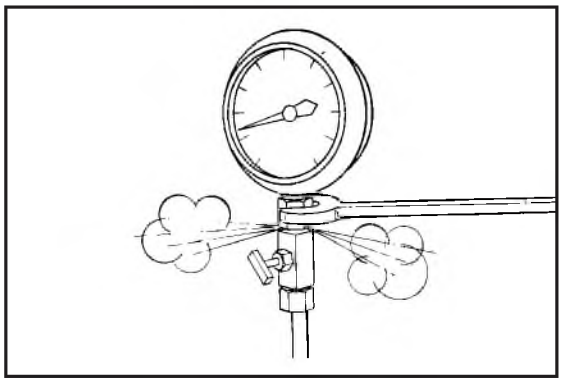

2. Read the gauge in direct alignment with the gauge hand.

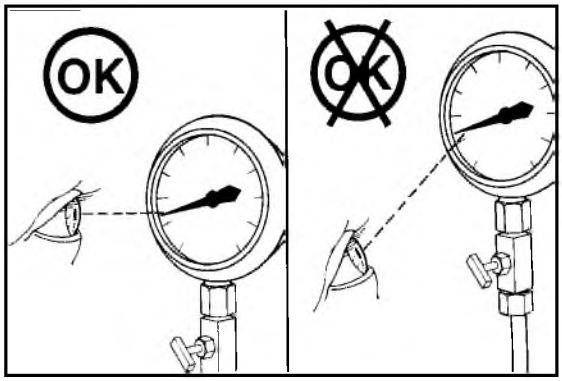


3. Read the flowmeter in direct alignment with the float.

**NOTE:** Read the level of the floats where indicated.

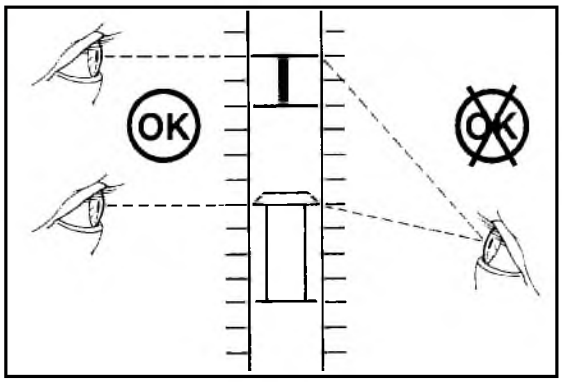


4. Portable fuel pressure gauges must be checked regularly against a master gauge or against the gauge on the fuel pump test stand. Adjust the valve on the gauge until the gauge needle stops vibrating.

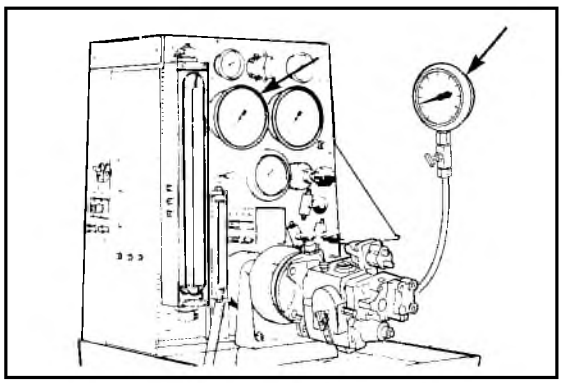

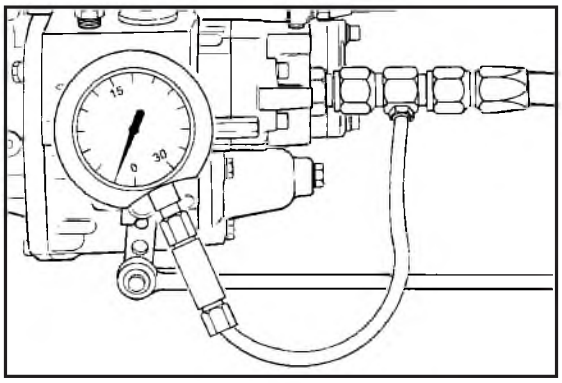


5. When measuring the fuel inlet and drain line restriction, the back pressure and vacuum gauges must be on the same level as the connection point.

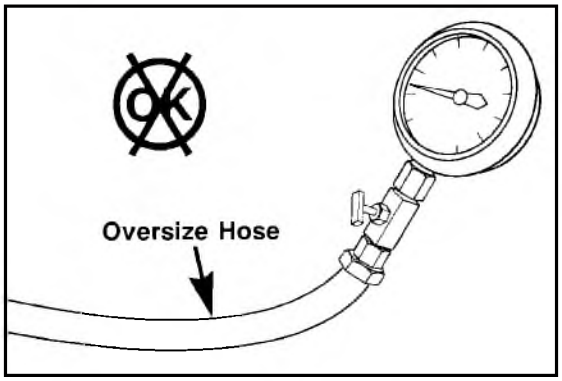


**NOTE:** Always use the same size and material of lines or hoses as was originally supplied with the gauge.

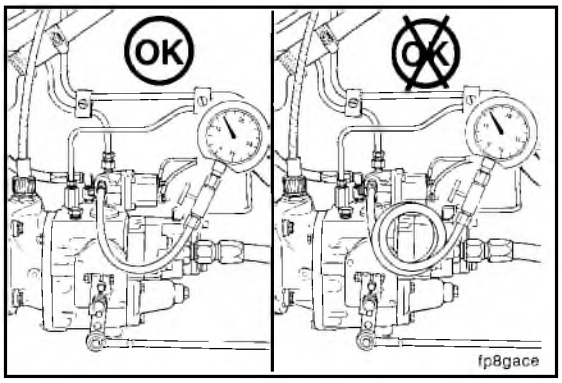


6. The distance from the gauge to the connection point must be as short as possible.

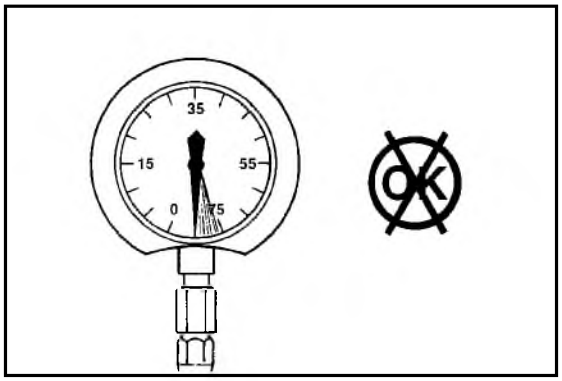


7. Never exceed the maximum capacity of the gauge or flowmeter. If the maximum is exceeded, check the gauge against a master gauge.

# Idle Speed - Check And Adjust (05-05)

## Check

1. To check the engine speed, use the vehicle tachometer, Part No. ST-744 Hand Tachometer, Part No. 3375631 Digital Tachometer, or Part No. 3377462 Optical Tachometer.

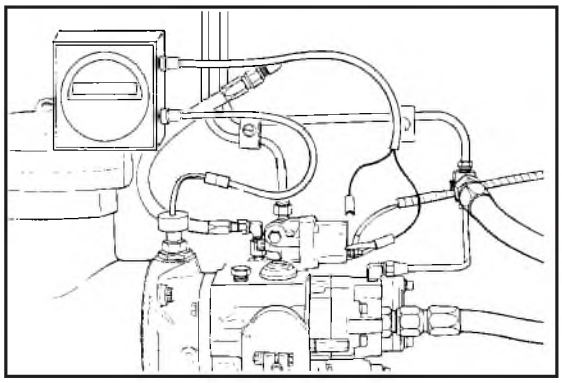

2. The remote starter, Part No. 3376506, can be used to start the engine. The leads are marked for their connection points.

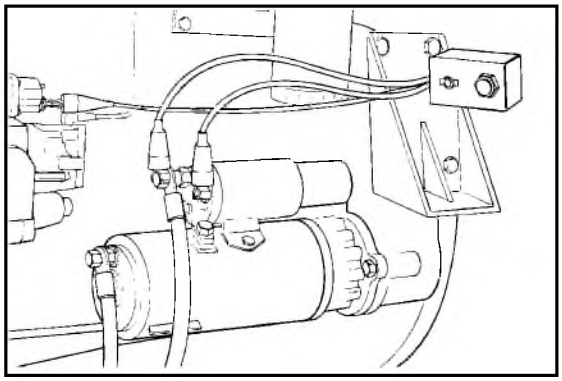

3. Install the tachometer in the fuel pump tachometer drive.

   If using the optical tachometer, put the reflective tape on the vibration damper.

4. Operate the engine at low idle. Record the rpm.

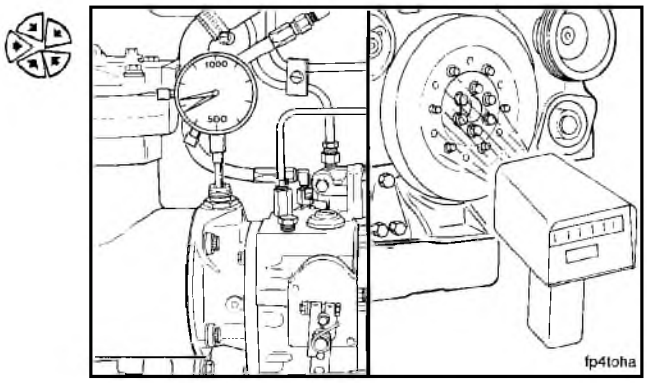


## Automotive Pump - Adjust

1. Adjust the engine low idle speed between 650 to 725 RPM.

**NOTE:** This adjustment is sometimes necessary on a new engine to compensate for the added engine driven accessories that are installed by the truck or vehicle manufacturer.

2. Stop the engine.
3. Remove the plug from the spring pack cover.
4. Install the fuel pump idle adjusting tool, Part No. 3375981, in the plug hole.

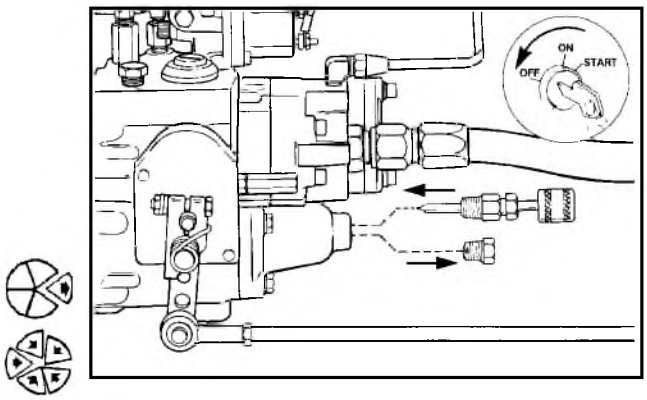

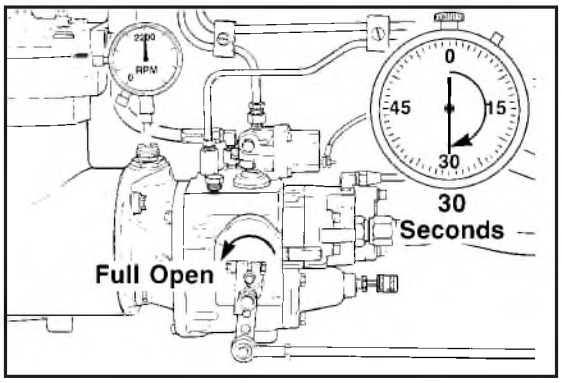


5. Operate the engine for 30 seconds at high idle to remove the air from the fuel system.

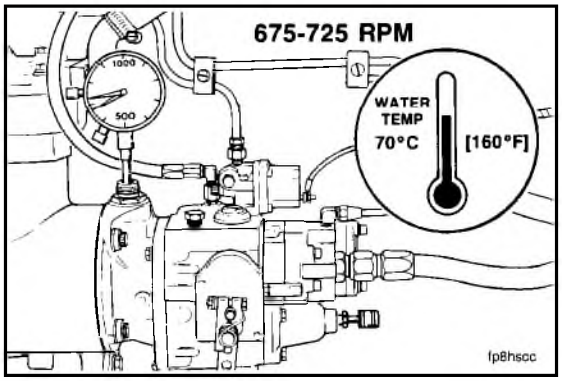


a. Make sure the engine coolant temperature is at or above 70°C [160°F].

b. Adjust the idle speed. Turn the screw in (clockwise) to increase the idle RPM. Turn the screw out (counter-clockwise) to lower the RPM.

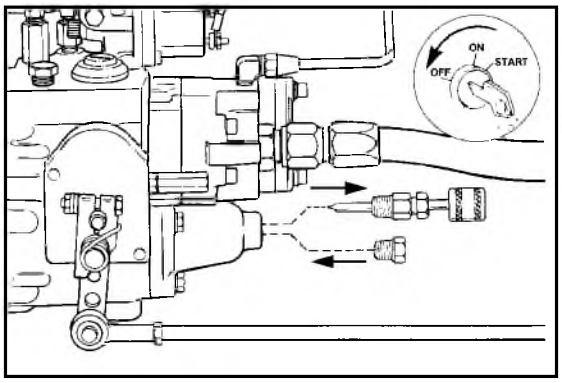

c. Remove the tool and install the plug.

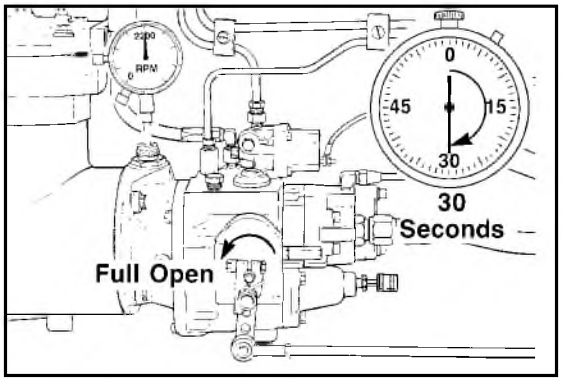


d. Operate the engine until the RPM is constant and all of the air is out of the fuel system.

e. Check the idle speed again.

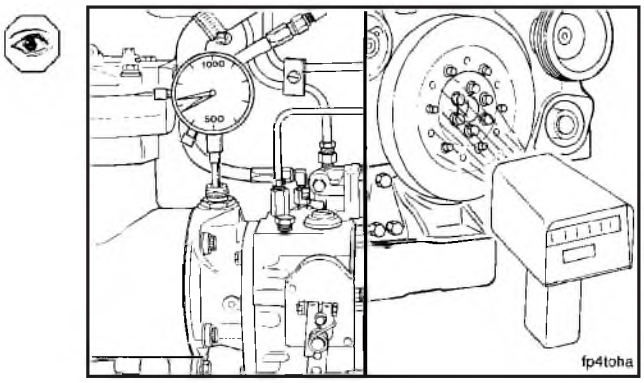


## Variable Speed (VS) Governor - Adjust

1. To adjust the VS idle speed, remove the lock nut and jam nut from the screw in the rear of the VS cover. Discard the copper washers.

   a. Install a new copper washer and the jam nut.

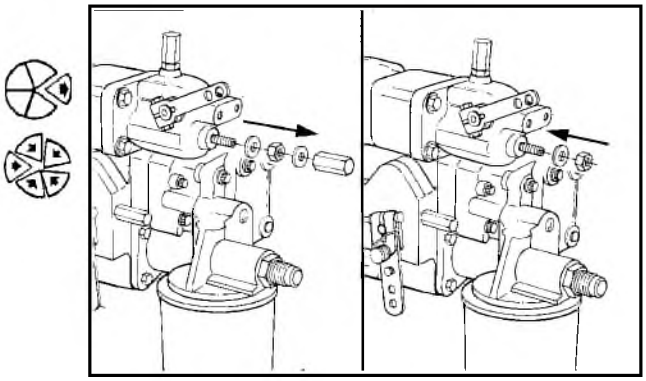

   b. Start the engine. Hold the VS lever in the idle position. Adjust the idle screw to the correct RPM and tighten the jam nut.

   c. Install a new copper washer and lock nut.

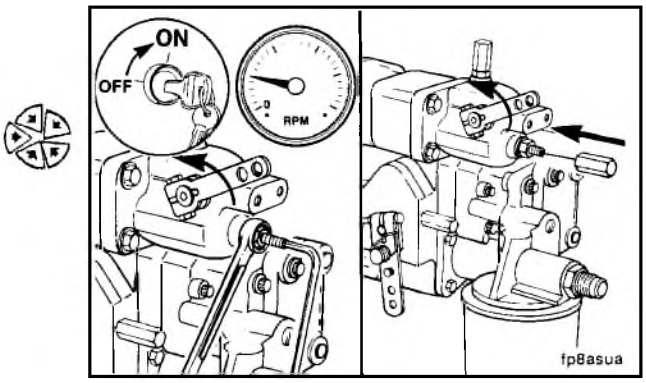


   d. Check the idle speed again.

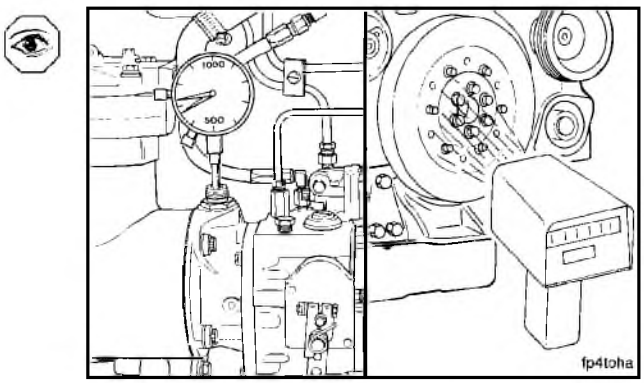

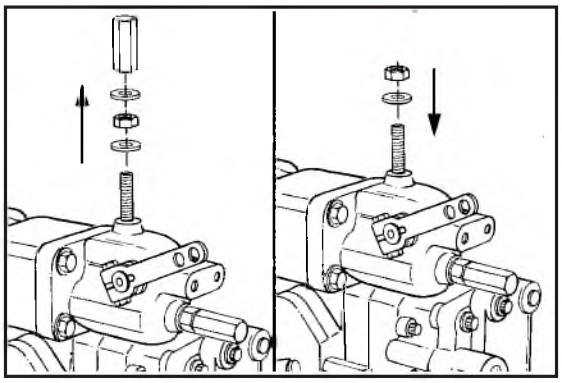

e. To adjust the VS high speed, remove the lock nut and jam nut from the top screw of the VS cover. Discard the copper washers.

f. Install a new copper washer and the jam nut.

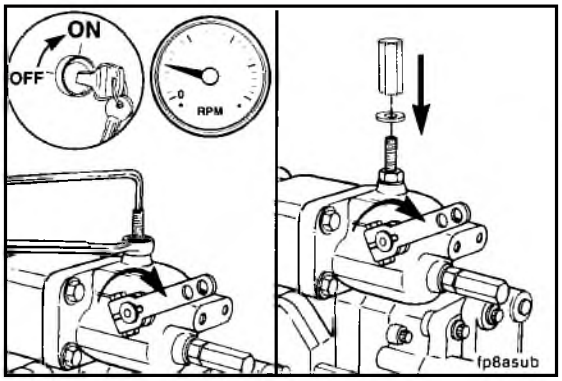


g. Start the engine. Hold the VS lever clockwise (in the high speed position). Adjust the screw to the correct RPM and tighten the jam nut.

h. Install a new copper washer and the lock nut.

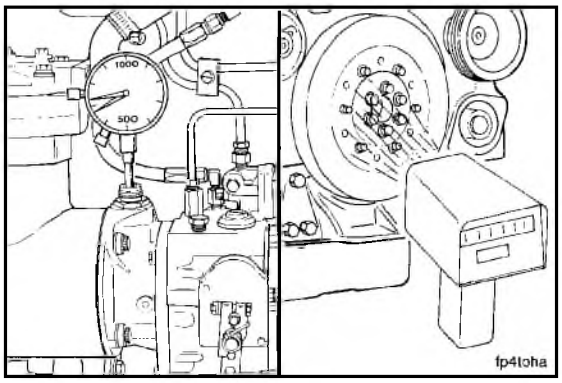


i. Check the idle speed again.

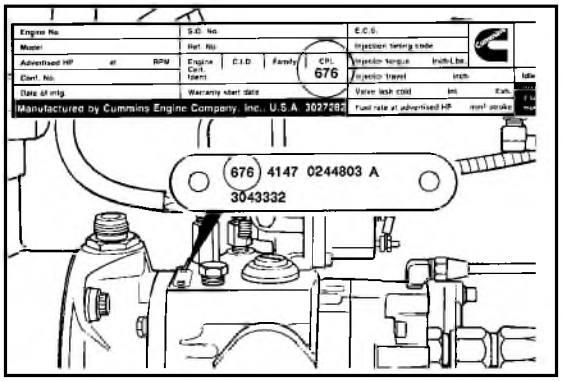


## Horsepower - Measure Engine Performance (05-06)

1. Make sure the same Control Parts List (CPL) number is on the fuel pump and the engine dataplate.

2. Find the fuel pump calibration code number on the fuel pump dataplate and in the Fuel Pump Calibration Values Manual, Bulletin No. 3379352.

**NOTE:** The ambient air temperature must be 10°-38°C [50°-100°F].

**NOTE:** The fuel pump calibration codes for engines built in 1976-1982 are found in Bulletin 3379182. The fuel pump calibration codes for engines built in 1970-75 are found in Bulletin 3379068.

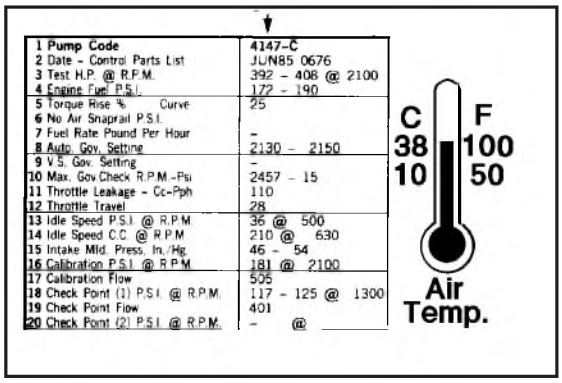

| | |
|---|---|
| 1 Pump Code | 4147-C |
| 2 Date - Control Parts List | JUN85 0676 |
| 3 Test H.P. @ R.P.M. | 392 - 408 @ 2100 |
| 4 Engine Fuel P.S.I. | 172 - 190 |
| 5 Torque Rise % Curve | 25 |
| 6 No Air Snaprail P.S.I. | |
| 7 Fuel Rate Pound Per Hour | - |
| 8 Auto. Gov. Setting | 2130 - 2150 |
| 9 V.S. Gov. Setting | - |
| 10 Max. Gov.Check R.P.M.-Psi | 2457 - 15 |
| 11 Throttle Leakage - Cc-Pph | 110 |
| 12 Throttle Travel | 28 |
| 13 Idle Speed P.S.I. @ R.P.M. | 36 @ 500 |
| 14 Idle Speed C.C. @ R.P.M. | 210 @ 630 |
| 15 Intake Mid. Press. In./Hg. | 46 - 54 |
| 16 Calibration P.S.I. @ R.P.M. | 181 @ 2100 |
| 17 Calibration Flow | 505 |
| 18 Check Point (1) P.S.I. @ R.P.M. | 117 - 125 @ 1300 |
| 19 Check Point Flow | 401 |
| 20 Check Point (2) P.S.I. @ R.P.M. | - @ |



3. Record the following specifications from the fuel pump code:
   a. Engine horsepower at rated speed, line No.3.
   b. Engine fuel kPa [psi] (pressure), line No. 4.
   c. Fuel rate (flow) pounds per hour, line No. 7.
   d. Intake manifold pressure mm Hg [in/Hg] (Boost), line No. 14.
   e. AFC no air kPa [psi], line No. 40.

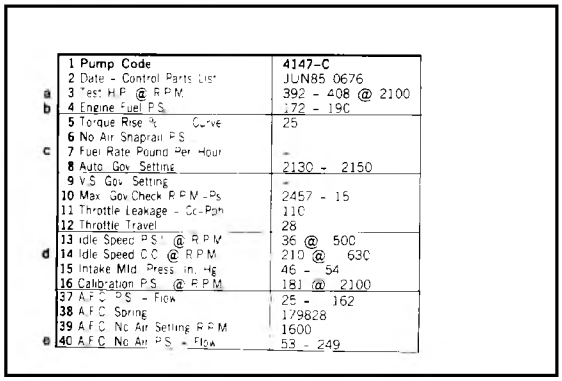

| | | |
|---|---|---|
| | 1 Pump Code | 4147-C |
| | 2 Date - Control Parts List | JUN85 0676 |
| a | 3 Test H.P. @ R.P.M. | 392 - 408 @ 2100 |
| b | 4 Engine Fuel P.S. | 172 - 190 |
| | 5 Torque Rise % Curve | 25 |
| | 6 No Air Snaprail P.S. | |
| c | 7 Fuel Rate Pound Per Hour | - |
| | 8 Auto. Gov. Setting | 2130 - 2150 |
| | 9 V.S. Gov. Setting | - |
| | 10 Max. Gov.Check R.P.M.-Psi | 2457 - 15 |
| | 11 Throttle Leakage - Cc-Pph | 110 |
| | 12 Throttle Travel | 28 |
| | 13 Idle Speed P.S.I. @ R.P.M. | 36 @ 500 |
| d | 14 Idle Speed C.C. @ R.P.M. | 210 @ 630 |
| | 15 Intake Mid. Press. In. Hg | 46 - 54 |
| | 16 Calibration P.S. @ R.P.M. | 181 @ 2100 |
| | 37 A.F.C. P.S. - Flow | 25 - 162 |
| | 38 A.F.C. Spring | 179828 |
| | 39 A.F.C. No Air Setting R.P.M. | 1600 |
| e | 40 A.F.C. No Air P.S. - Flow | 53 - 249 |

f. If additional engine data is required, refer to the engine data sheet, available from a Cummins authorized service location. For equipment with a torque converter, the stall speed and time are available from the equipment manufacturer.

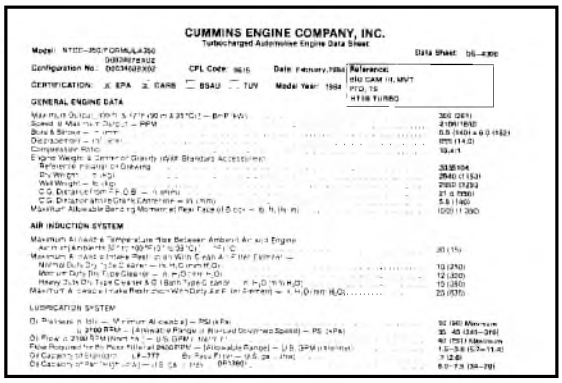

CUMMINS ENGINE COMPANY, INC.
Turbocharged Automotive Engine Data Sheet

GENERAL ENGINE DATA

AIR INDUCTION SYSTEM

LUBRICATION SYSTEM

g. Install the engine or unit on an engine dynamometer, chassis dynamometer, or use Part No. 3375710 Drive Line Dynamometer.

**NOTE:** If the equipment cannot be tested using a dynamometer, load the engine using a test stand, equipment hydraulics, or perform the stall speed test. Refer to Procedure 05-32 to load the engine.

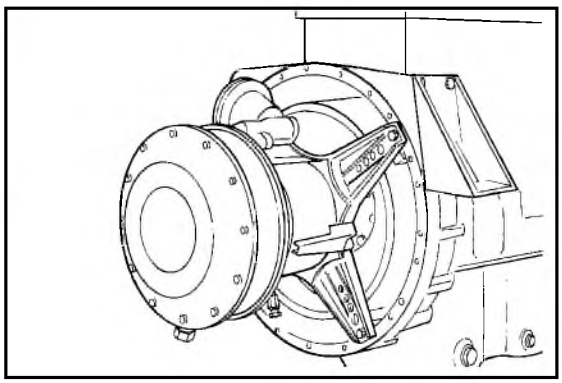

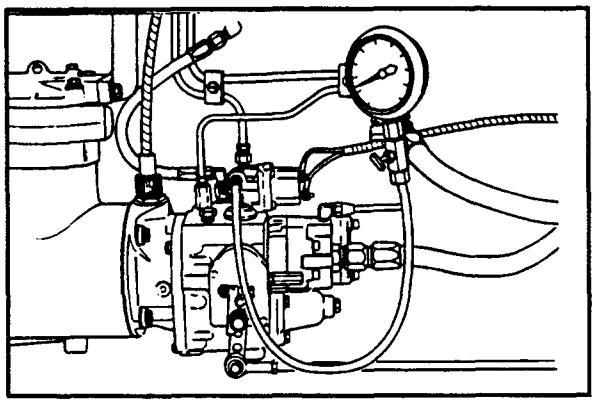

Remove the plug from the fuel pump shutoff valve.

h. Install service tool Part No.ST-435 Pressure Gauge or

i. The pressure gauge in the fuel measuring device, Part No. 3376375, to the shutoff valve.

Minimum Gauge Capacity:

2070 kPa [300 psi]

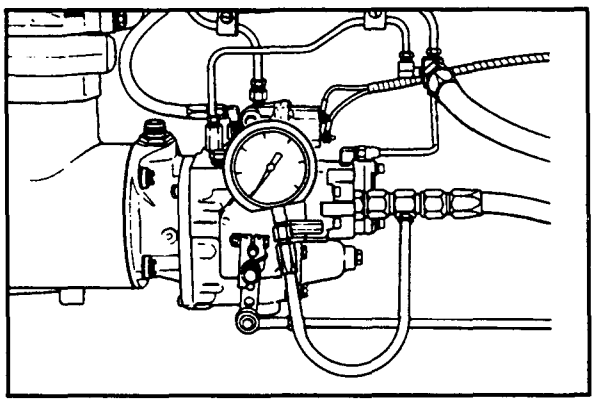

Install the vacuum gauge, Part No.ST-434, in the gear pump inlet line.

Install the adapter as close to the fuel pump inlet as possible. Attach a vacuum gauge to the adapter.

**Note:** The vacuum gauge, Part No. ST-434, contains the required gauge, hose, and two adapters.

Minimum Gauge Capacity:

760 mm-Hg [30 in-Hg]

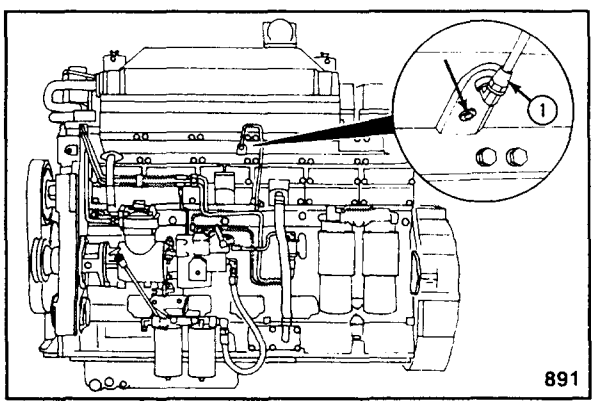


Measure the intake manifold pressure (boost) at the location shown.

Minimum Gauge Capacity:

2030 mm-Hg [80 in-Hg]

**Note:** Install a tee fitting in the AFC air tube (1) if the engine has a cold starting aid.

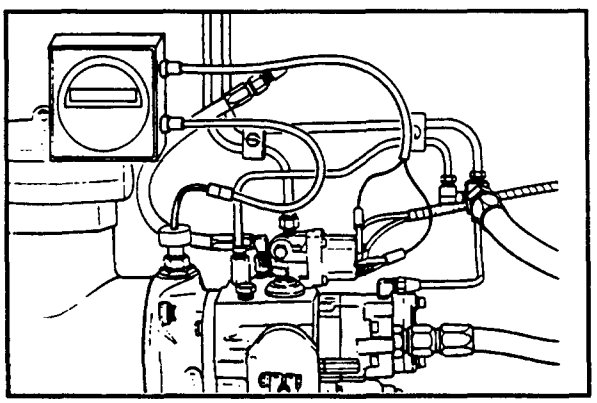

Install the digital tachometer, Part No. 3375631, or equivalent, to the fuel pump tachometer drive.

Install the fuel measuring device, Part No. 3376375, to the engine.

k. The fuel return line from the engine to the fuel measuring device.

l. The fuel inlet line to the fuel filter inlet.

m. The return line from the device to the tank.

n. The fuel inlet line to the device from the tank suction line.

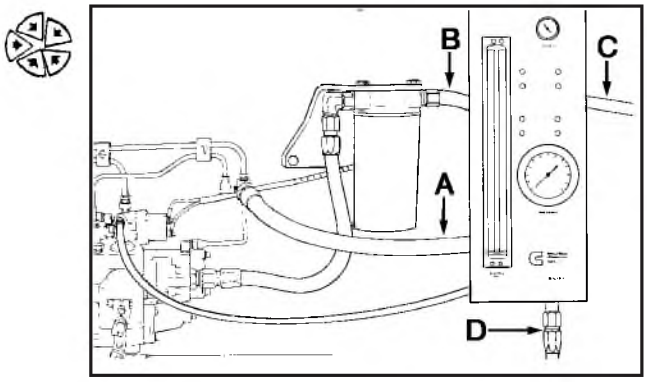


## Power Check Operation

1. Operate the engine at full throttle with no load to remove the air from the fuel system.

**NOTE:** For non-automotive applications, refer to the stall speed check, Procedure 05-32.

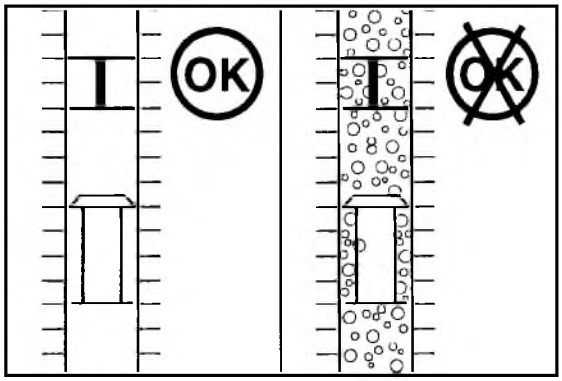


2. When the air is out of the system, the flow meter in the fuel measuring device will not show any air bubbles.

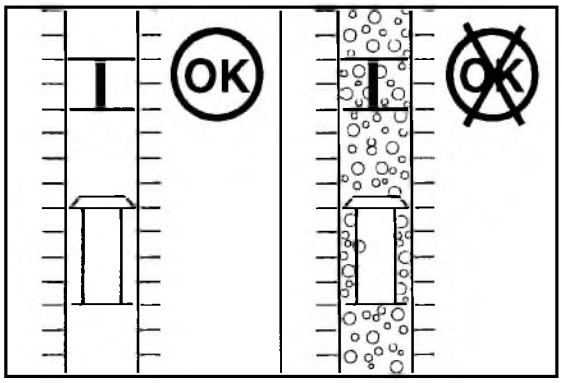


a. Remove the air from the fuel pressure gauge.

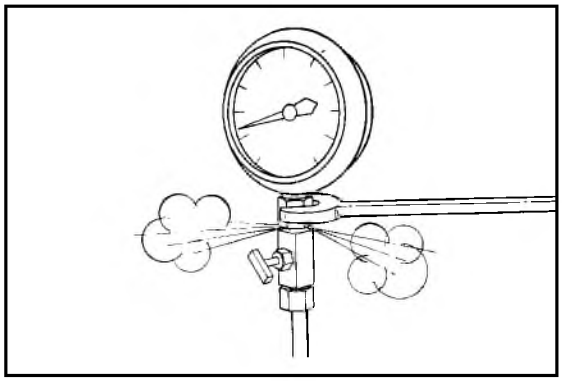

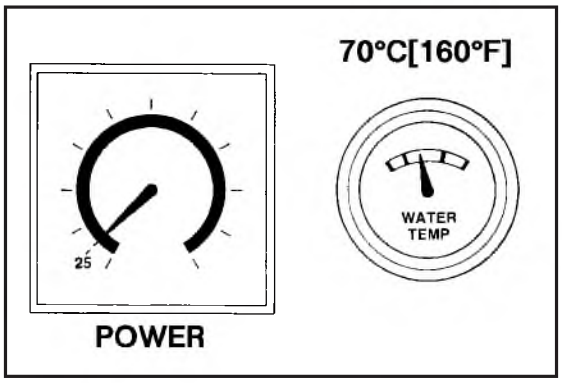


b. Operate the engine until the coolant temperature is at or above 70°C [160°F] by applying a light load on the dynamometer.

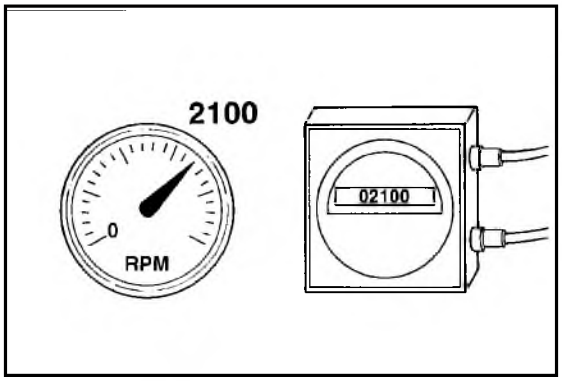


c. Check the accuracy of the vehicle tachometer with the digital tachometer.

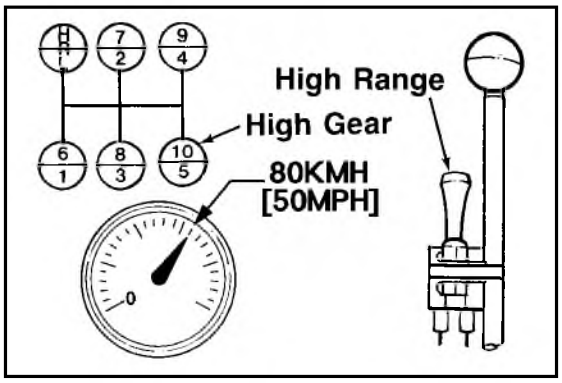


d. When testing on a chassis dynamometer or with Part No. 3375710 Drive Line Dynamometer, operate the unit in the top gear.

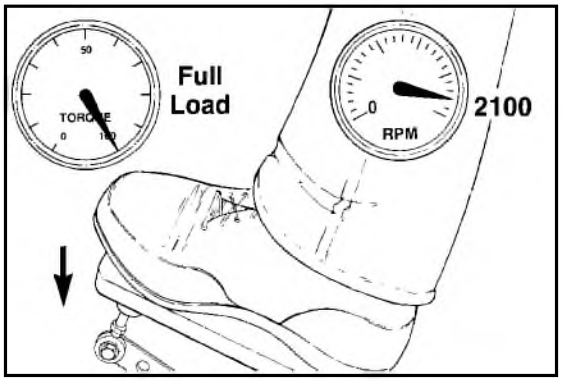


e. Operate the engine at full load and rated rpm. Progressively increase the load, and increase the throttle until at the full throttle position. Then decrease the load until at rated rpm.

f. Record the following information:

g. Rated speed

h. Fuel rate in pounds per hour

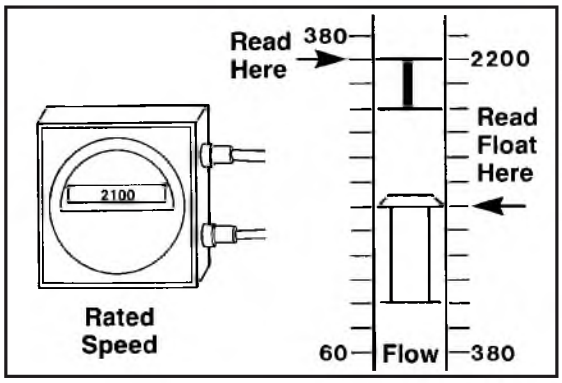


i. Turbocharger pressure

j. Engine fuel (rail) pressure

k. Gear pump fuel inlet restriction

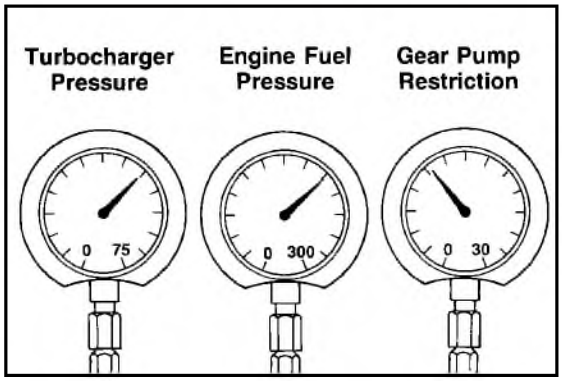


**NOTE:** The maximum fuel (rail) pressure and turbocharger pressure must occur at rated speed.

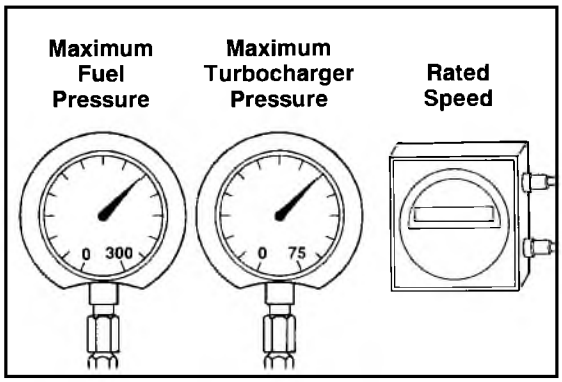


l. If the gear pump fuel inlet restriction is high, replace the fuel filter. Refer to Procedure 05-13.

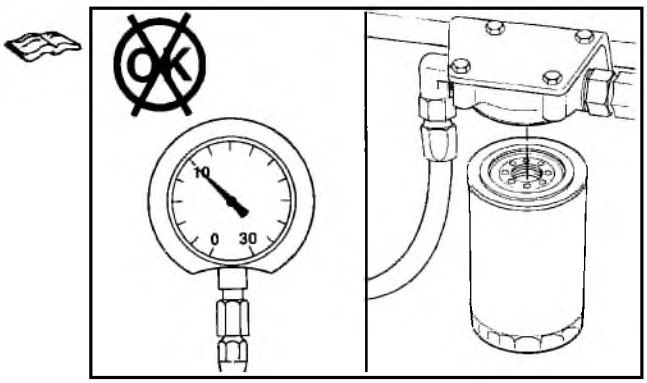

| | |
|---|---|
| 1 Pump Code | 4147-C |
| 2 Date - Control Parts List | JUN85 0676 |
| 3 Test H.P. @ R.P.M. | 392 - 408 @ 2100 |
| 4 Engine Fuel P.S.I. | 172 - 190 |
| 5 Torque Rise % Curve | 25 |
| 6 No Air Snapral P.S.I. | |
| 7 Fuel Rate Pound Per Hour | - |
| 8 Auto. Gov. Setting | 2130 - 2150 |
| 9 V.S. Gov. Setting | - |
| 10 Max. Gov.Check R.P.M.-Psi | 2457 - 15 |
| 11 Throttle Leakage - Cc-Pph | 110 |
| 12 Throttle Travel | 28 |
| 13 Idle Speed P.S.I. @ R.P.M. | 36 @ 500 |
| 14 Idle Speed C.C. @ R.P.M. | 210 @ 630 |
| 15 Intake Mfd. Press. In./Hg. | 46 - 54 |
| 16 Calibration P.S.I. @ R.P.M. | 181 @ 2100 |
| 17 Calibration Flow | 505 |
| 18 Check Point (1) P.S.I. @ R.P.M. | 117 - 125 @ 1300 |
| 19 Check Point Flow | 401 |
| 20 Check Point (2) P.S.I. @ R.P.M. | - @ |

OK

m. If all of the values are within the specifications, the engine is producing the correct horsepower.

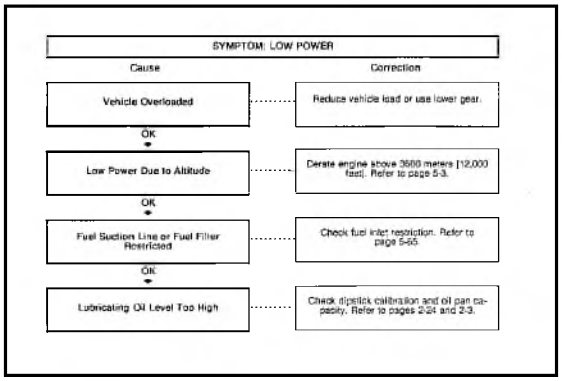


n. If the values are not within the specifications, refer to the ''Engine Power Output Low'' troubleshooting chart and the ''Driveability and Low Power Check list.''

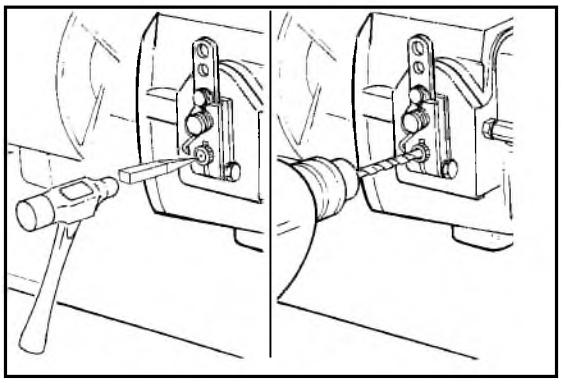

## Fuel Rate - Adjust (05-07)

1. To raise or lower the engine fuel rate, remove the ball from the end of the throttle shaft.
   a. Use a center punch to mark the ball.
   b. Drill a 4 mm [0.1875 inch](3/16 inch) hole in the ball.

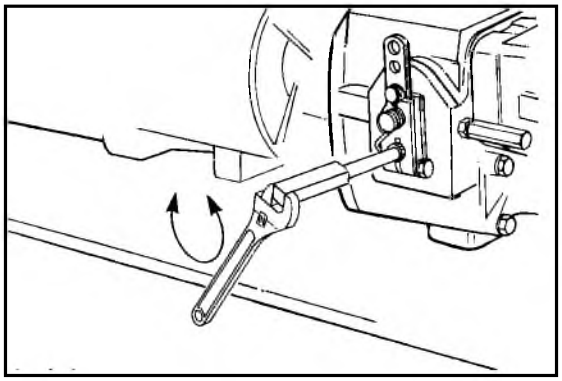

c. Use an ''easy out extractor'' or a ''slide hammer'' to remove the ball.

d. Adjust the throttle shaft plunger screw to raise or lower the fuel rate.

e. Turn the screw in (clockwise) to lower the fuel rate.

f. Turn the screw out to raise the fuel rate.

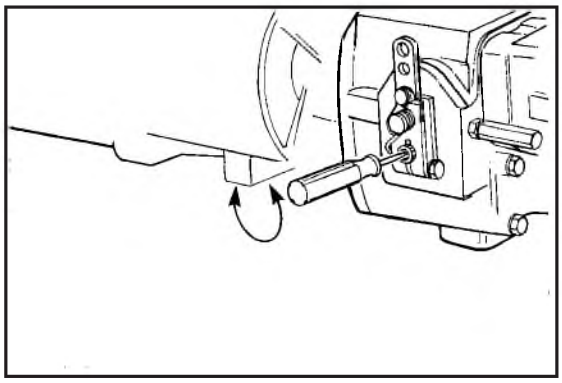

**Caution: Do not turn the plunger out closer than 6 mm [0.250 inch](1/4 inch) from the end of the shaft. The fuel pressure can push the plunger out of the shaft. Spilled fuel is a hazard.**

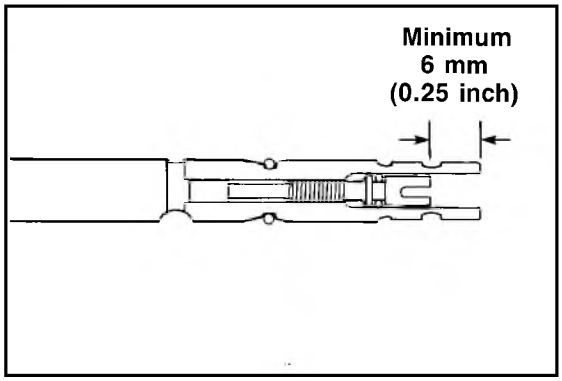


g. If the maximum flow (1) the pump can be adjusted to is below the correct value (2), replace the fuel pump.

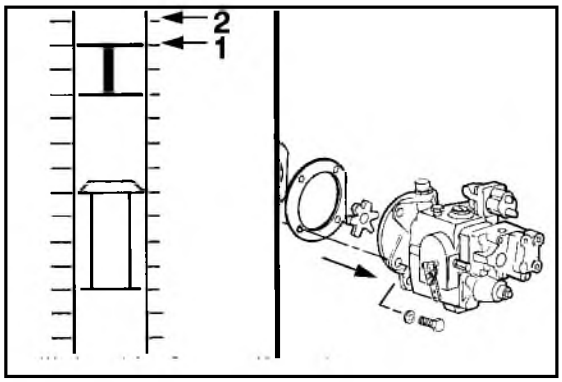


h. After the fuel rate is adjusted to the correct value, install a new ball in the end of the throttle shaft. This will help to prevent tampering.

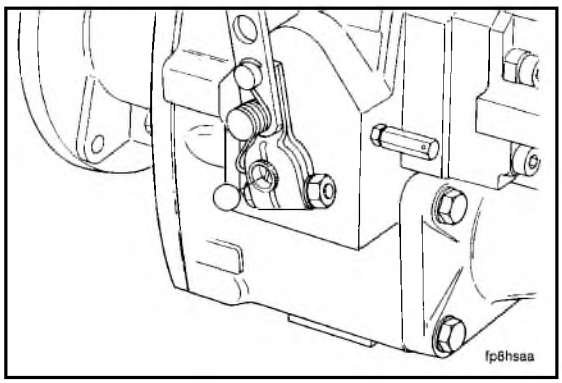

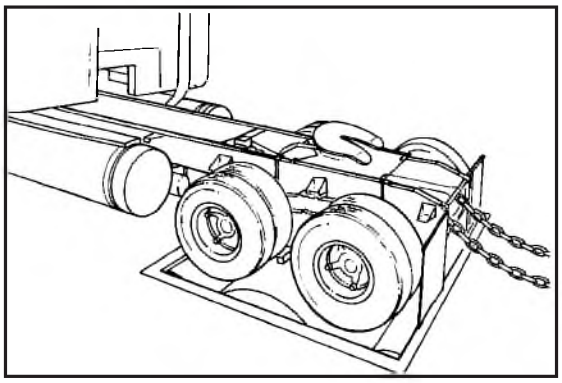

# AFC No-Air Valve Setting - Check And Adjust (05-08)

This adjustment must be made on:

- chassis dynamometer,

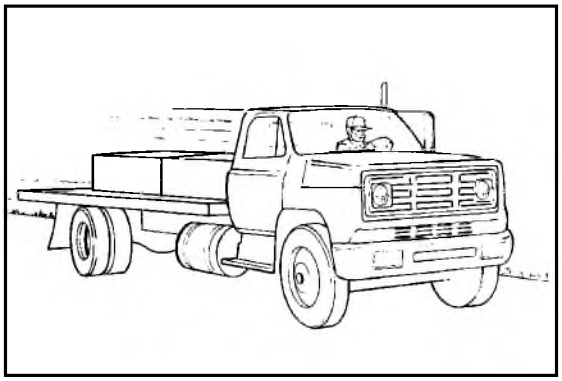

- Over the road or

- On off-road vehicles with an automatic transmission, use as a time to stall check. Refer to Procedure 05-32.

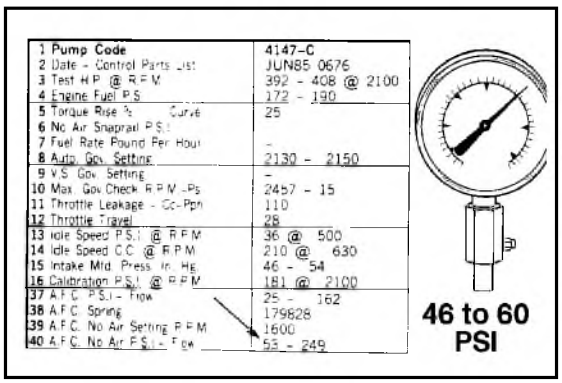

| | |
|---|---|
| 1 Pump Code | 4147-C |
| 2 Date - Control Parts List | JUN85 0676 |
| 3 Test H.P. @ R.P.M. | 392 - 408 @ 2100 |
| 4 Engine Fuel P.S. | 172 - 190 |
| 5 Torque Rise % Curve | 25 |
| 6 No Air Snaprail P.S.I. | |
| 7 Fuel Rate Pound Per Hour | - |
| 8 Auto. Gov. Setting | 2130 - 2150 |
| 9 V.S. Gov. Setting | - |
| 10 Max. Gov. Check R.P.M.-Ps | 2457 - 15 |
| 11 Throttle Leakage - Cc-Ppm | 110 |
| 12 Throttle Travel | 28 |
| 13 Idle Speed P.S.I. @ R.P.M. | 36 @ 500 |
| 14 Idle Speed C.C. @ R.P.M. | 210 @ 630 |
| 15 Intake Mfd. Press. In. Hg. | 46 - 54 |
| 16 Calibration P.S.I. @ R.P.M. | 181 @ 2100 |
| 37 A.F.C. P.S.I. - Flow | 25 - 162 |
| 38 A.F.C. Spring | 179828 |
| 39 A.F.C. No Air Setting R.P.M. | 1600 |
| 40 A.F.C. No Air P.S.I. - Flow | 53 - 249 |



## Check

1. Check the fuel pump code AFC no-air fuel (rail) pressure at 1600 RPM.
   a. The pressure on the engine must be within 48 kPa [7 psi] of the no-air pressure setting on the fuel pump test stand.
   b. The fuel pump test stand no-air values are listed in the Fuel Pump Calibration Values Manual, Bulletin No. 3379352-01, under the fuel pump code number.

c. Install a rail pressure gauge, Part No. ST-435, to the shutoff valve. The minimum gauge capacity must be 2070 kPa [300 psi].

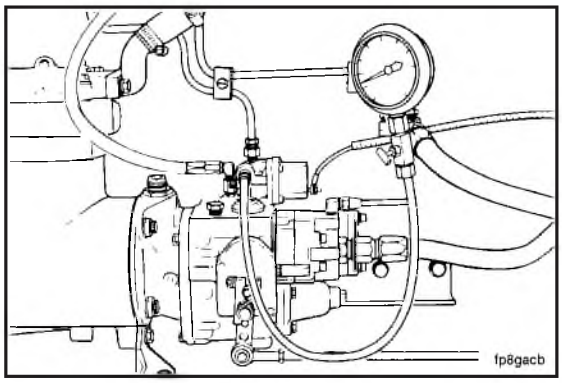


d. Install a tachometer, Part No. ST-774, 3375631, or 3377462.

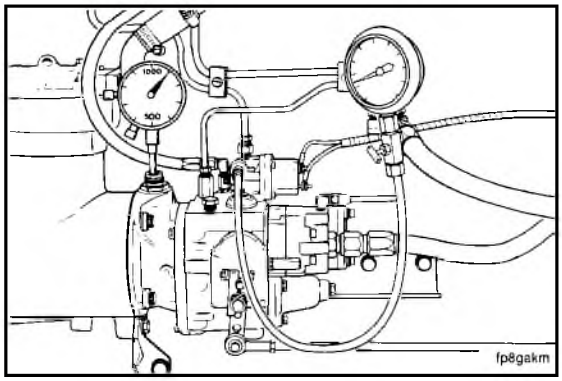


e. Remove the AFC air supply line from the air intake manifold or the compressor air tube. Install a plug or a cap on the air manifold hole.

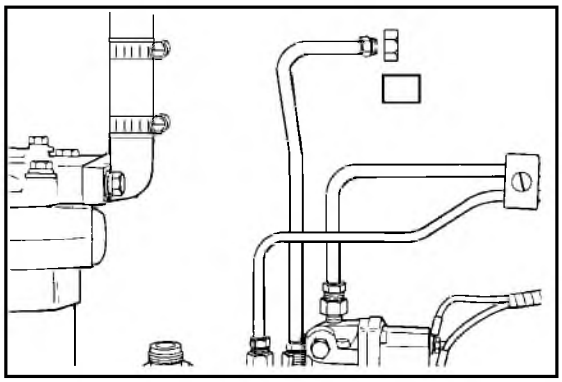

f. Operate the engine in the highest possible gear.

g. Remove the air from the pressure gauge supply tube while the engine is warming to operating temperature.

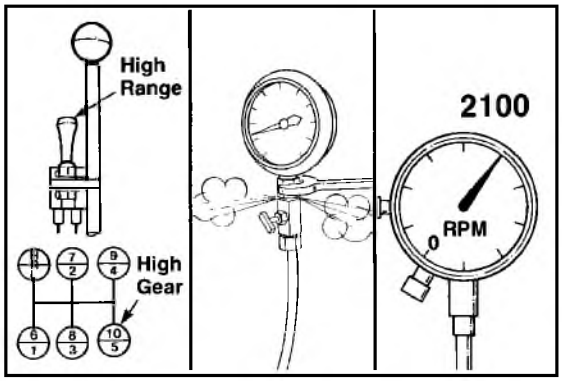

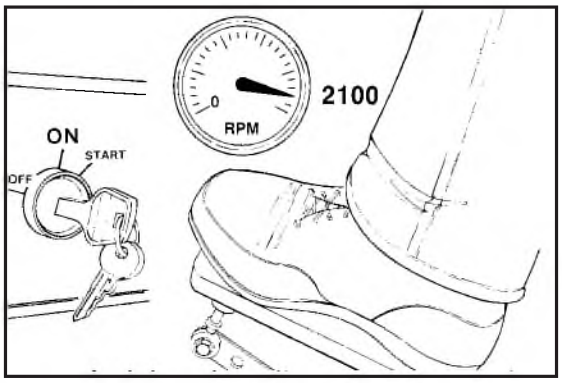


h. Progressively increase the load and depress the accelerator or open the fuel pump throttle lever to the full throttle position.

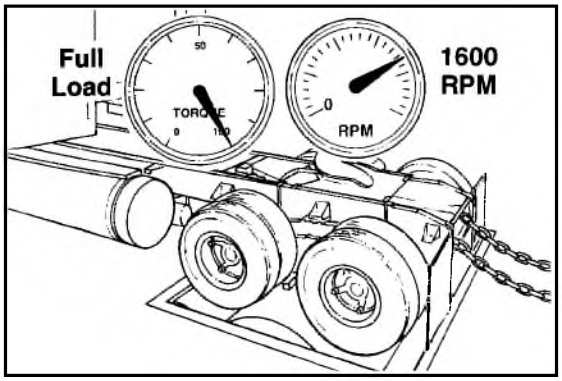


i. On a chassis dynamometer, increase the load until the engine is at the specified (1600) RPM.

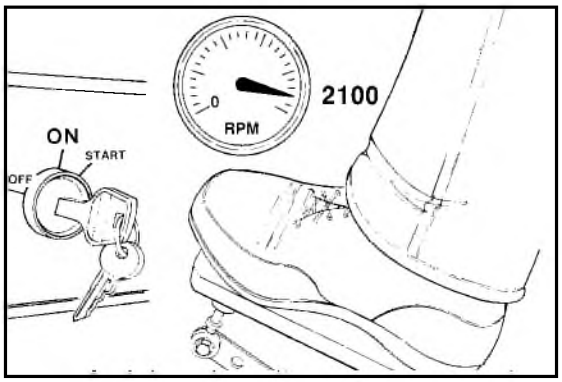


j. On the road, drive the vehicle with the throttle full open. Apply the vehicle brakes to slow the vehicle to the specified (1600) RPM.

k. On off-road equipment, check the manufacturer's specifications for the time to accelerate to stall speed from idle. Refer to Procedure 05-32.

l. Read the fuel rail pressure gauge. This is the AFC no-air rail pressure.

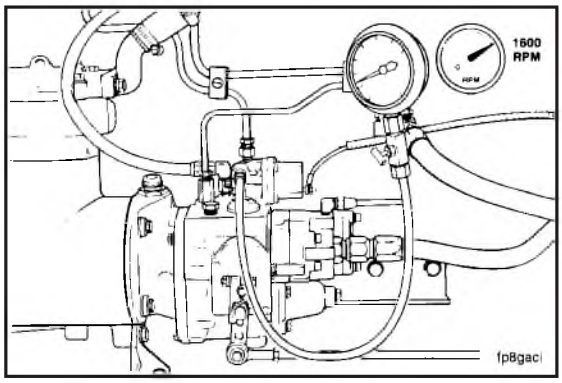


## Adjust

1. If the pressure is not within the specifications, remove the throttle lever from the fuel pump.
2. Remove the throttle cover plate.
3. Install the throttle lever.

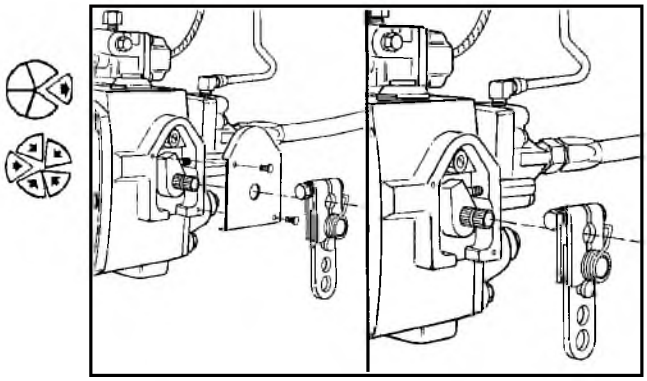

4. Use the AFC no-air adjustment tool, Part No. 3375140.
   a. Loosen the lock nut.
   b. Adjust the pressure.

**NOTE:** Turn the knurled knob clockwise to lower the pressure.

   c. Tighten the lock nut on the AFC no-air valve to 5.1 N•m [45 in-lb].

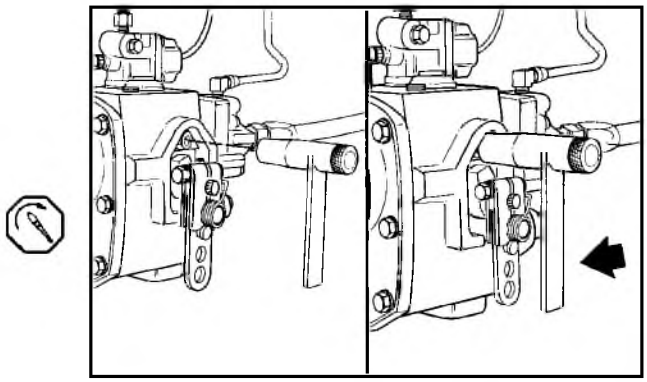

   d. Test the engine. Do not exceed the maximum specification.
   e. Remove the throttle lever.

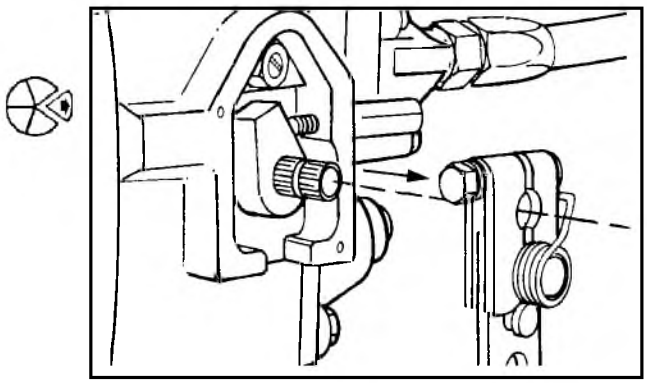

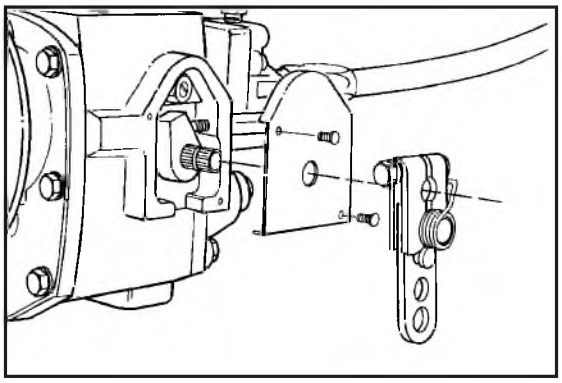

f. Install the throttle shaft cover plate and the throttle lever.

| | |
|---|---|
| 1 Pump Code | 4147-C |
| 2 Date - Control Parts List | JUN85 0676 |
| 3 Test H.P. @ R.P.M. | 392 - 408 @ 2100 |
| 4 Engine Fuel P.S. | 172 - 190 |
| 5 Torque Rise % Curve | 25 |
| 6 No Air Snapram P.S.I. | |
| 7 Fuel Rate Pound Per Hour | - |
| 8 Auto. Gov. Setting | 2130 - 2150 |
| 9 V.S. Gov. Setting | - |
| 10 Max. Gov. Check R.P.M.-Ps | 2457 - 15 |
| 11 Throttle Leakage - Cc-Pph | 110 |
| 12 Throttle Travel | 28 |
| 13 Idle Speed P.S.I. @ R.P.M. | 36 @ 500 |
| 14 Idle Speed C.C. @ R.P.M. | 210 @ 630 |
| 15 Intake Mfd. Press. In. Hg. | 46 - 54 |
| 16 Calibration P.S.I. @ R.P.M. | 181 @ 2100 |
| 37 A.F.C. P.S.I. - Flow | 25 - 162 |
| 38 A.F.C. Spring | 179828 |
| 39 A.F.C. No Air Setting R.P.M. | 1600 |
| 40 A.F.C. No Air P.S.I. - Flow | 53 - 249 |

**Caution: It is illegal to adjust the fuel pump greater than the given specifications in the Fuel Pump Calibration Manual.**

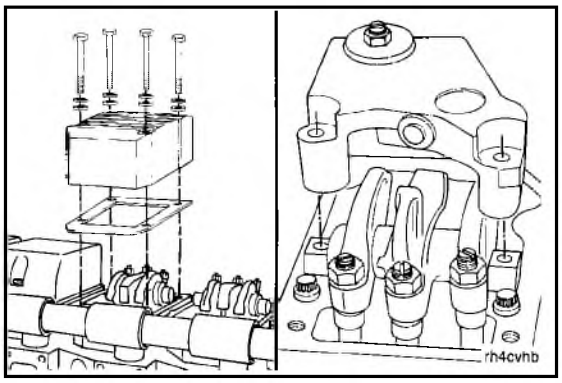


# Injectors - Replace (05-09)

## Remove

**NOTE:** To clean and calibrate the injectors, remove them from the engine. The injectors must be calibrated on an injector test stand. Refer to the Injector Rebuild Manual, for the rebuild and calibration procedures.

1. Remove the rocker lever cover. Refer to Procedure 07-04.
2. Remove the Jacobs engine brake. Refer to Procedure 07-07.

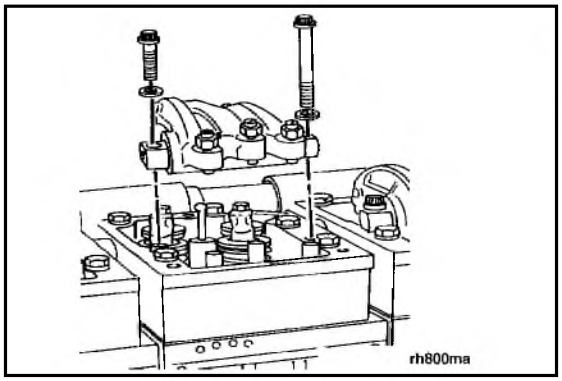


3. Remove the rocker lever assembly. Refer to Procedure 07-09.

**Note:** This step applies **only** to engines equipped with STC.

4. Remove the STC banjo connector mounting screw. Remove the banjo connector. Remove and discard the sealing washers (48) and the o-ring (49).

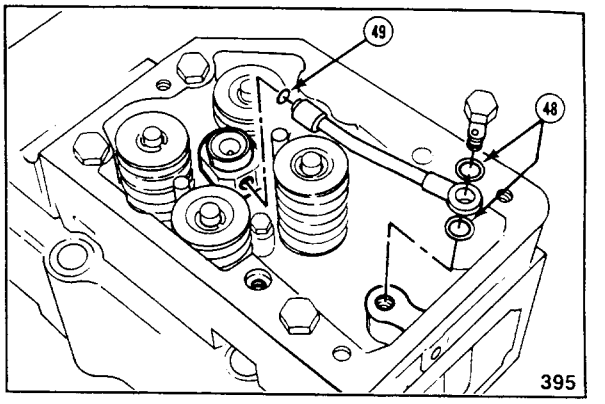


5. Remove the injector hold down capscrews. Remove the clamp.

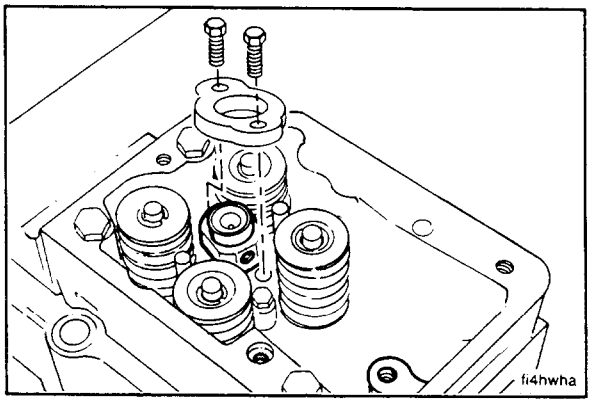


**Note:** The rocker housing has been removed from the illustration for clarity.

**Note:** Do not let the STC tappet fall out of the injector. Damage can result.

6. For top stop injectors, use an injector puller, Part No. 3376497. Be sure the puller arms are firmly under the top stop screw. Tighten the clamping ring (1). Use the slide hammer to remove the injector.

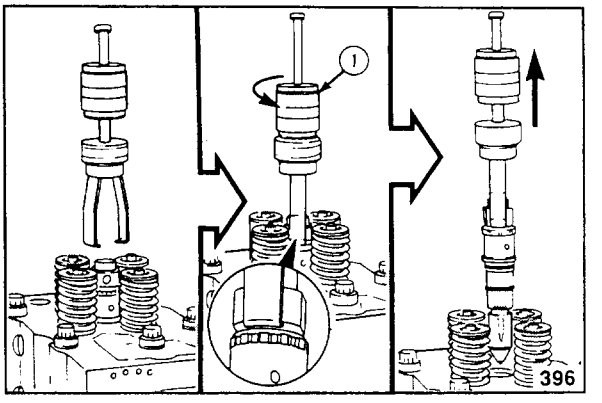


7. For standard injectors, use injector puller, Part No. 3376000 or 3376497. Put the split collar over the injector. Slide the locking collar over the split collar. Use the slide hammer to remove the injector.

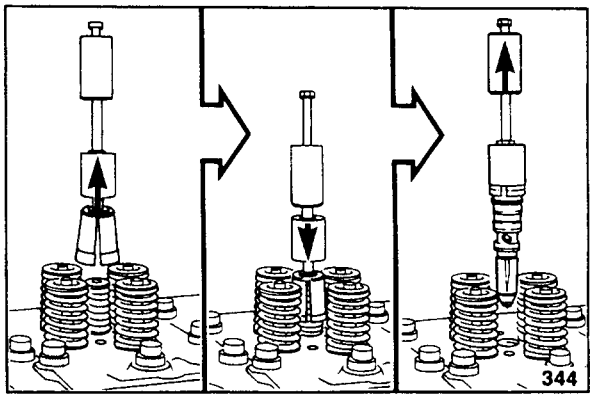

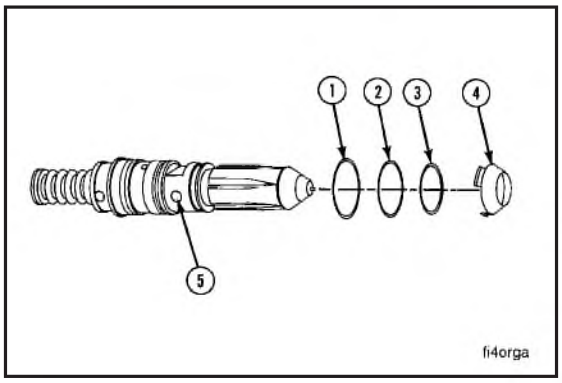


## Check For Reuse

**NOTE:** Injector plungers and barrels have a very precise fit and are damaged easily. Do not remove the plungers unless you have been trained using the proper techniques. Do not allow the plunger to fall out of the injector.

1. Remove the o-rings (1,2, and 3).

**NOTE:** Sealing rings are available in different thicknesses to adjust the injector protrusion.

2. Remove the sealing ring (4), and note it's size.
3. Use a lint free cloth and clean the exterior of the injector. Carefully check the area where the sealing ring makes contact with the injector.
4. Check the orifice screen (5). It must be clean. If there is debris on the screen, remove the retaining clip and the screen for cleaning. Clean the screen in solvent and dry with compressed air. Install the screen and retaining clip.

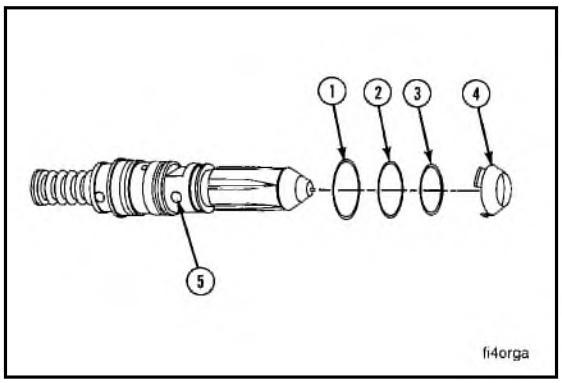


5. Identify the o-rings so they can be installed in the correct injector groove.

   O-ring (1) has a red dot or stripe. The ring is a dull gray in appearance.

   O-ring (2) has no markings.

   O-ring (3) has a green dot or stripe. The ring is shiny black in appearance. Lubricate the o-rings with vegetable oil and install them on the injector.

6. Install the proper size seal ring (4).

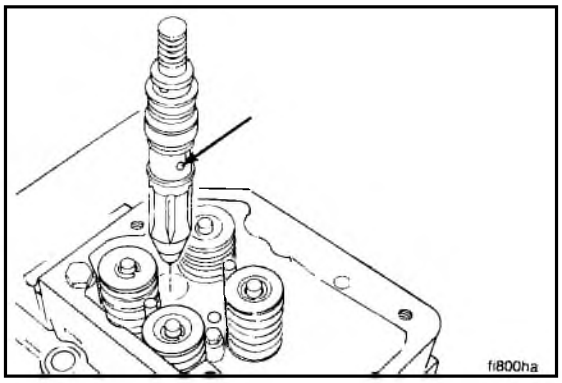


## Install

1. Position the standard injector in the bore. Turn the injector so that the injector screen points toward the hold-down capscrew hole on the intake side of the head.

**Note:** Do not let the STC tappet fall out of the STC (Top Stop) injector. Damage can result.

2. The STC tappet must be installed correctly. The large holes in the side must be near the rocker lever assembly.

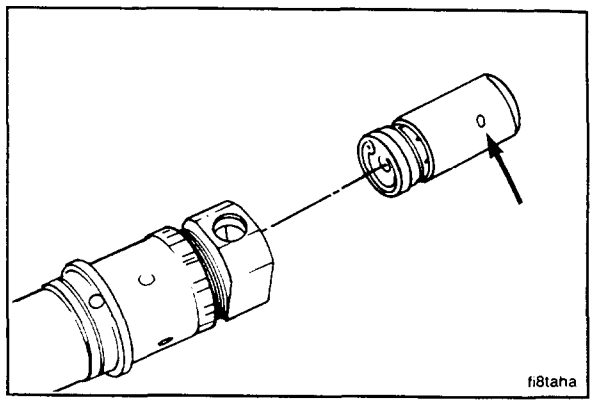


**Note:** Do not push the injector on the seat until it is correctly aligned.

3. Position the STC injector in the bore. Turn the injector so that the hole in the top stop screw points to the oil supply hole in the rocker lever housing.

   Use the oil jumper tube and the connector screw as tools. Turn the injector until the holes are aligned. Remove the connector screw and the tube.

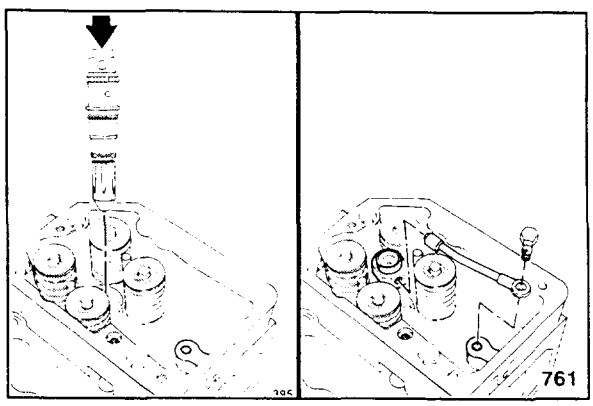


**Caution: Do not use a wooden tool to push the injector on the seat. Failure can result due to splinters falling into the tappet.**

4. Use a blunt object that touches the top stop screw. Use a quick, hard push with your hands to seat the injector. A single snapping sound will be heard when the injector is seated properly.

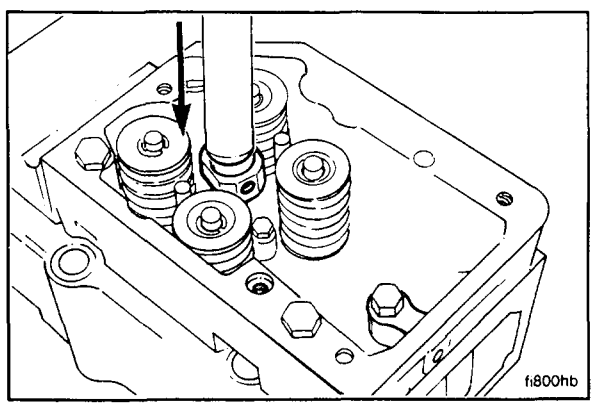


**Caution: The injector hold-down clamp that is used on engines with STC requires capscrews that are 3 mm [1/8 inch] longer than those on other K19 engines.**

5. Install the hold-down clamp and the self-locking capscrews. Tighten the capscrews alternately and evenly so the clamp will be centered on the injector body. Tighten the capscrews to 16.2 N•m [145 in-lb].

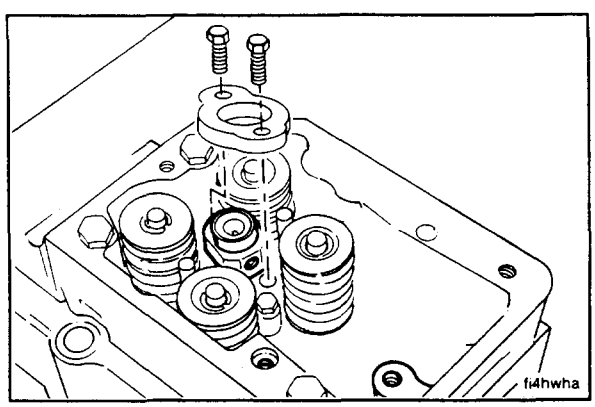

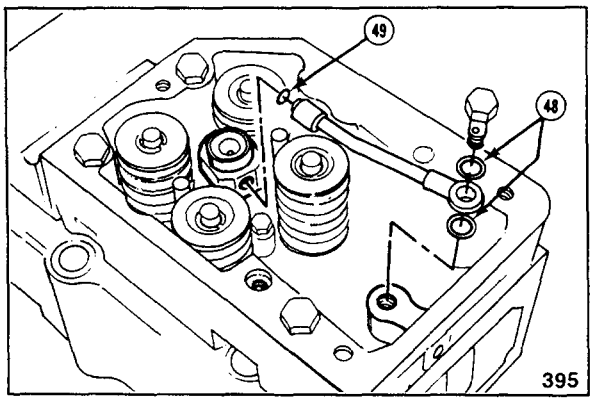


6. Install the o-ring (1) on the jumper tube. Lubricate the o-ring with engine oil. Install the jumper tube and the copper sealing washers (2). Install the connector screw. Tighten the screw to 25 N•m [20 ft-lb].

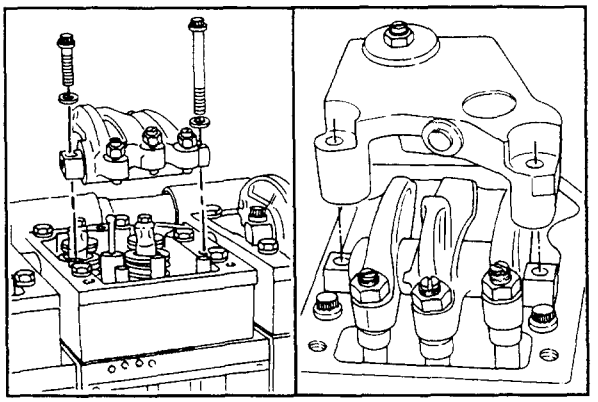

7. Install the rocker lever assembly. Refer to Procedure 07-09.
8. Install the Jacobs engine brake. Refer to Procedure 07-07.

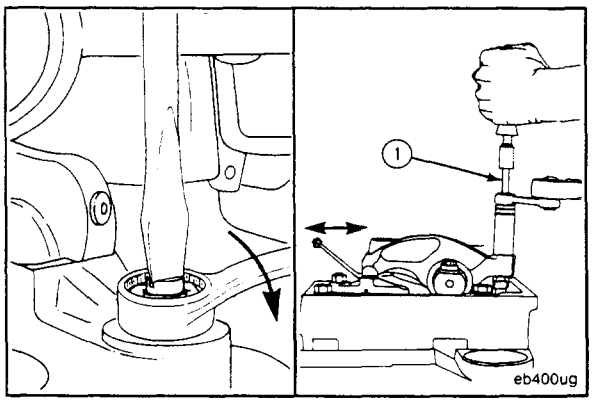


9. Adjust the Jacobs engine brake. Refer to Procedure 07-06.
10. Adjust the rocker levers. Refer to Procedure 07-05.

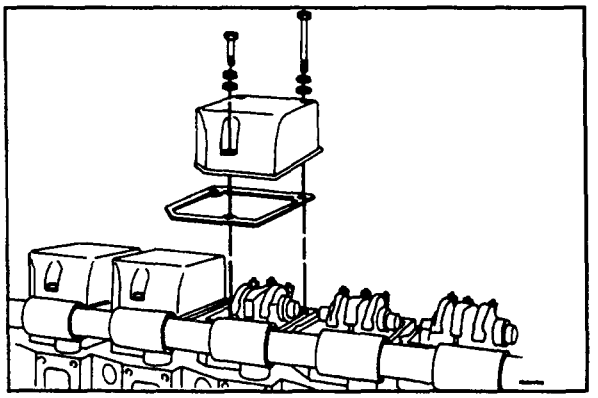

11. Install the rocker lever cover. Refer to Procedure 07-04.

## Injectors - Clean Exterior For Reuse (05-10)

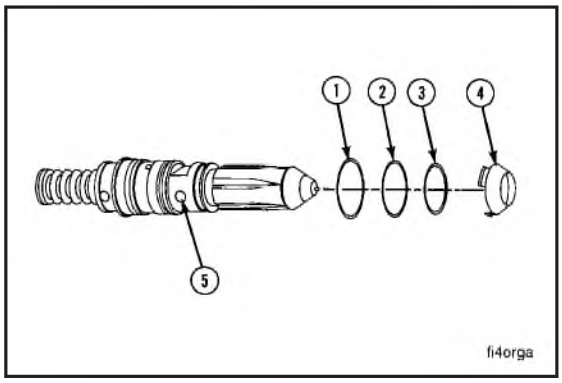


**NOTE:** Injector plungers and barrels have a very precise fit damaged easily. Do not remove the plungers unless you have been trained using the proper techniques. Do not allow the plunger to fall out of the injector.

1. Remove the o-rings (1,2, and 3).

**NOTE:** Sealing rings are available in different thicknesses to adjust the injector protrusion.

2. Remove the sealing ring (4), and note its size.
3. Use a lint free cloth and clean the exterior of the injector. Carefully check the area where the sealing ring makes contact with the injector.
4. Check the orifice screen (5). It must be clean. If there is debris on the screen, remove the retaining clip and the screen for cleaning. Clean the screen in solvent and dry with compressed air. Install the screen and retaining clip.
5. Identify the o-rings so they can be installed in the correct injector groove.

   O-ring (1) has a red dot or stripe. The ring is a dull gray in appearance.

   O-ring (2) has no markings.

   O-ring (3) has a green dot or stripe. The ring is shiny black in appearance.

**Caution: Do not lubricate the o-rings until installation in the engine.**

6. Install the proper size sealing ring (4).

## Fuel Pump - Replace (05-11)

### Remove

1. Clean the fuel pump and the surrounding area before removing it from the engine.

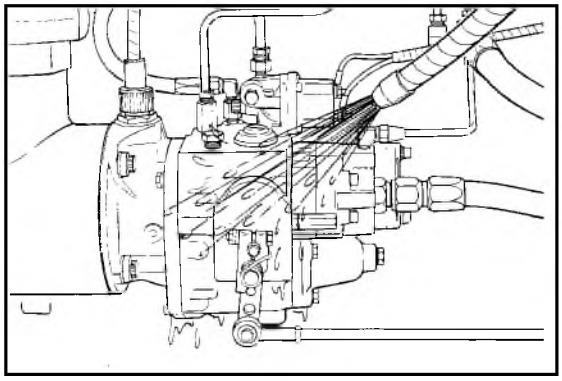

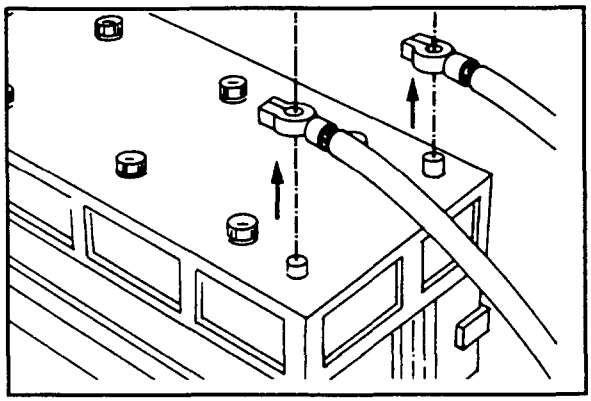

2. Disconnect the battery cables.

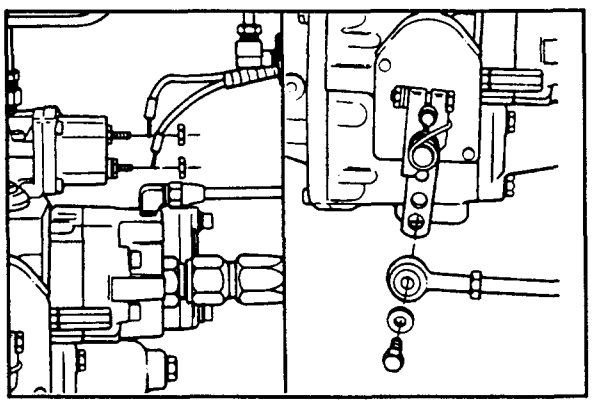

3. Remove the wire to the fuel shutoff valve.
4. Remove the linkage from the throttle lever.

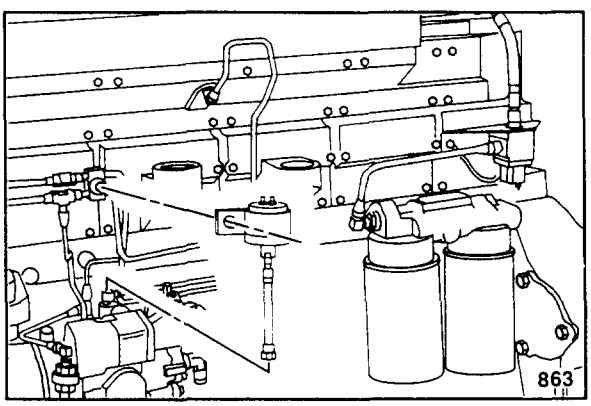


**Note:** This step applies **only** to engines equipped with STC.

5. Remove the STC fuel rail switch.

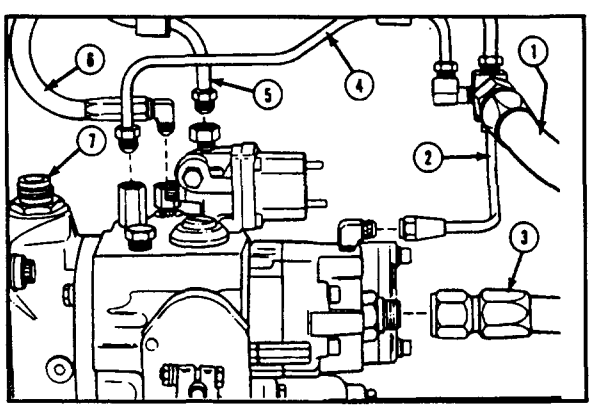


6. Remove the fuel tubing and air hose.
   - Fuel drain (1).
   - Gear pump cooling drain (2).
   - Gear pump suction line (3).
   - AFC fuel drain (4).
   - Fuel supply to injectors (5).
   - AFC supply hose (6).
   - Tachometer cable (7).

7. Remove the four mounting capscrews, and the fuel pump. Remove the drive coupling (23). Remove and discard the gasket.

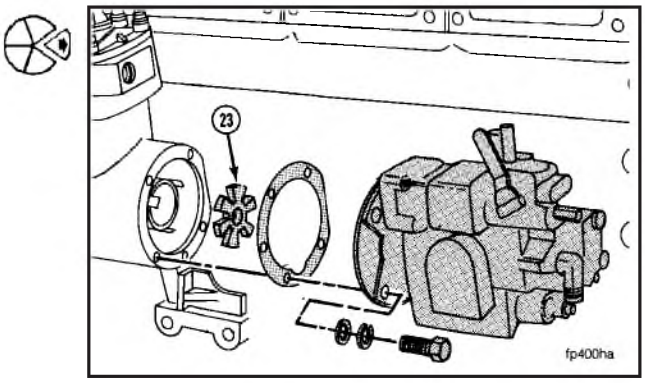


## Check for Reuse

1. Clean the fuel pump, and the air compressor or accessory drive mounting surfaces.
2. Inspect the mounting surfaces for damage.

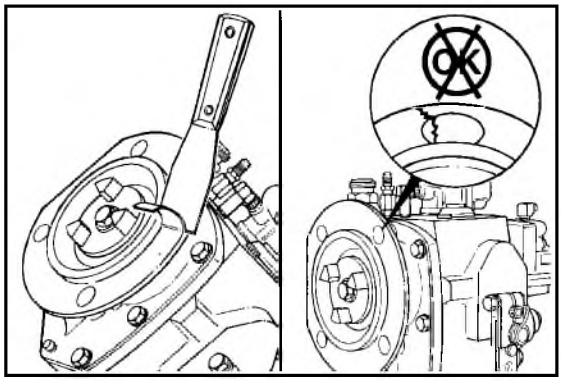


3. Visually inspect the spider coupling for damage.

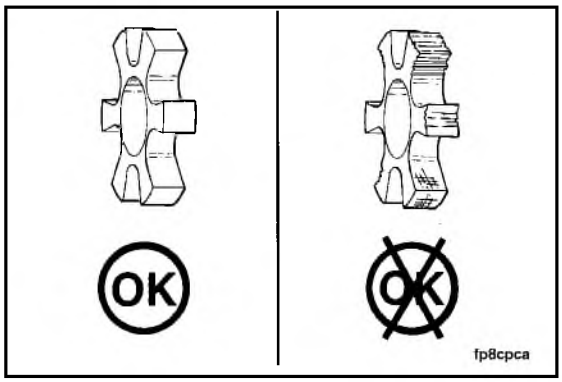


## Install

**NOTE:** All K19 engines use a white nylon or light green fuel pump drive coupling.

1. Install the drive coupling (23), gasket, fuel pump, and four capscrews. Tighten the capscrews to 45 N•m [35 ft-lb].

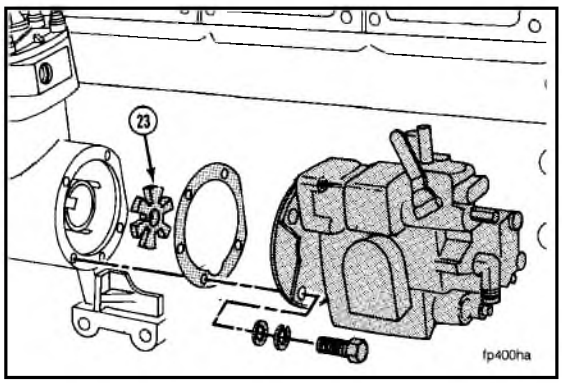

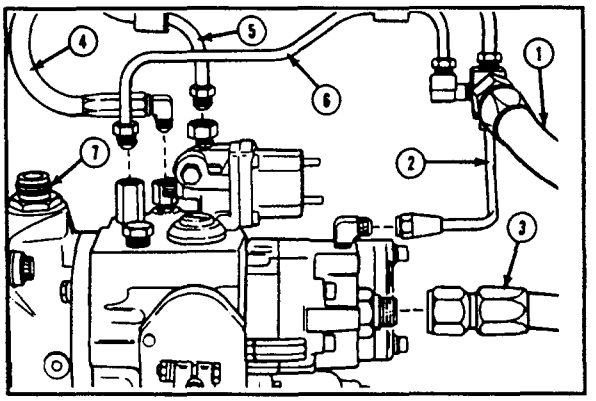


2. Install the fuel tubing and air hose.
   - Fuel drain (1).
   - Gear pump cooling drain (2).
   - Gear pump suction line (3).
   - AFC fuel drain (4).
   - Fuel supply to the injectors (5).
   - AFC air supply hose (6).
   - Tachometer cable (7).

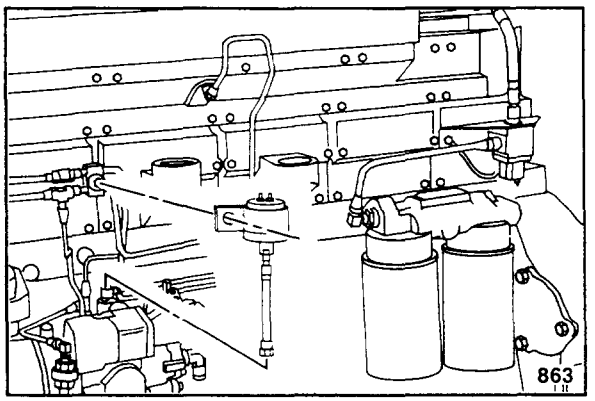


**Note:** This step applies **only** to engines equipped with STC.

3. Install the STC pressure switch. Connect the hose to the switch and to the fuel pressure tube fitting on the fuel pump.

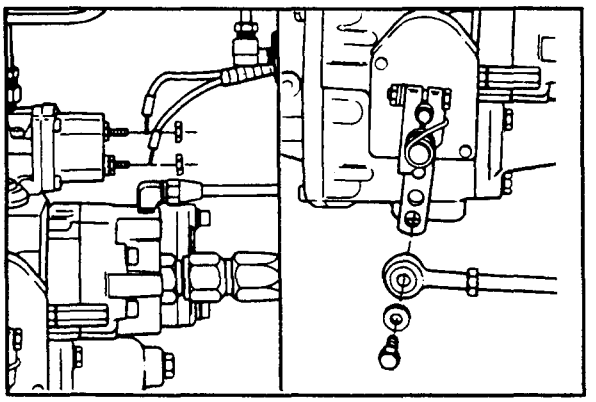

4. Install the electric wire to the fuel shutoff valve.

**Note:** The wire connection nut and the ground post nut must be clean and tight.

5. Install the linkage to the throttle lever.

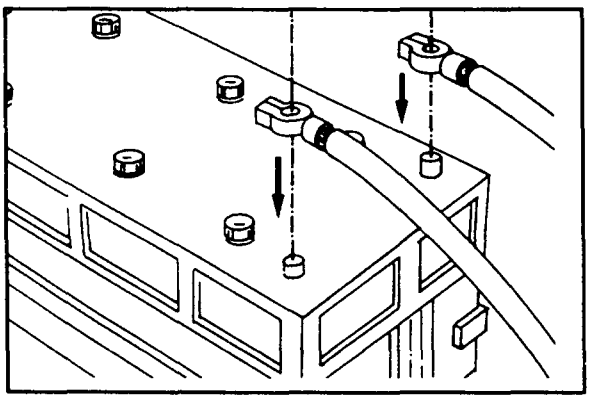

6. Connect the battery cables.

7. Operate the engine to normal operating temperature and check for leaks.

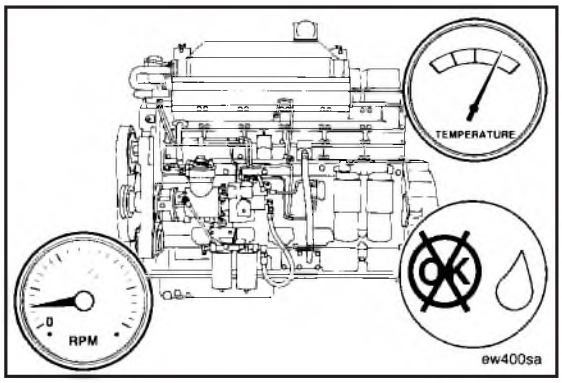


## Throttle Travel - Check (05-12)

**NOTE:** This step applies only to an automotive fuel pump.

1. Throttle Lever Breakover - Check
   a. Make sure the throttle linkage is adjusted so the throttle lever breaks over 3 to 6 mm [0.125 to 0.250] (1/8 to 1/4 inch) when the lever is in the full throttle position.
   b. The throttle lever stop must contact the front throttle stop screw.

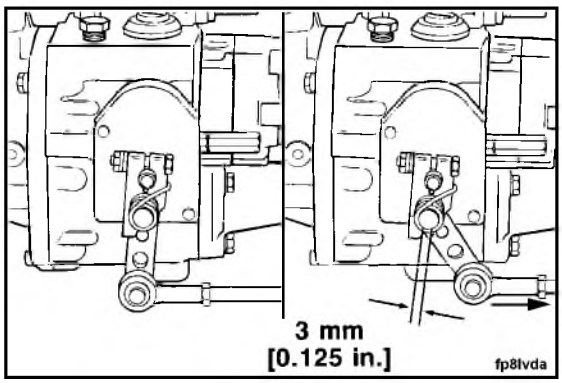


2. Variable Speed (VS) Throttle Linkage Adjustment
   c. Remove the throttle linkage from the VS throttle lever.
   d. Hold the VS lever in the idle position. Move the linkage to the idle position.

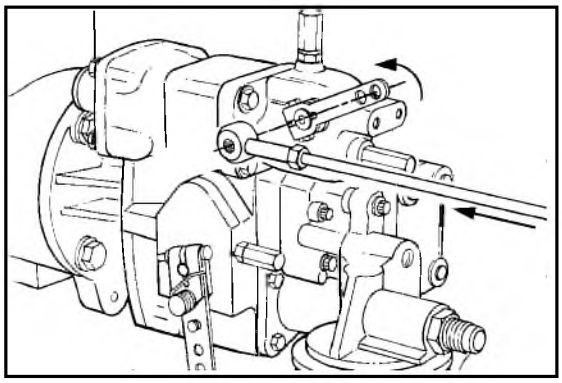

   e. If the lever and the linkage are not aligned, adjust the linkage.

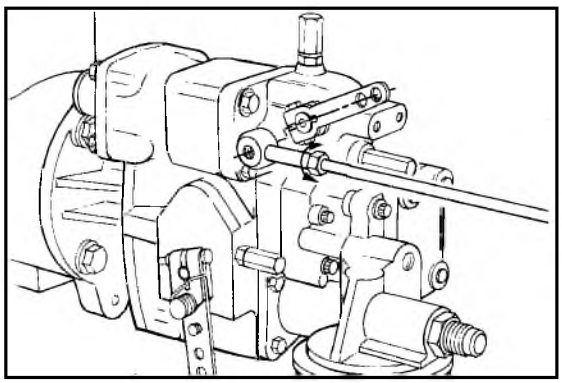

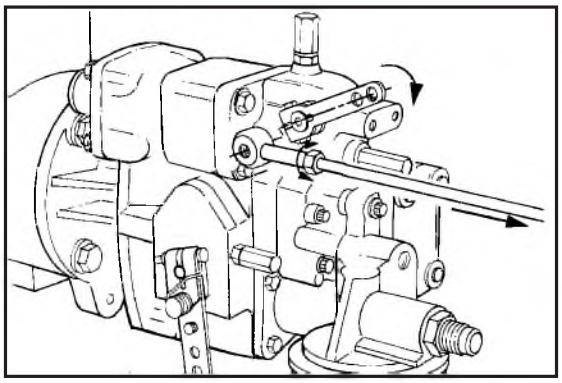

f. Move the VS lever and linkage to the maximum speed position.

g. If the lever and the linkage are not aligned, adjust the linkage.

**NOTE:** Throttle travel on a VS lever is not adjustable. The pump may be recalibrated with a stiffer VS Governor spring to reduce throttle travel.

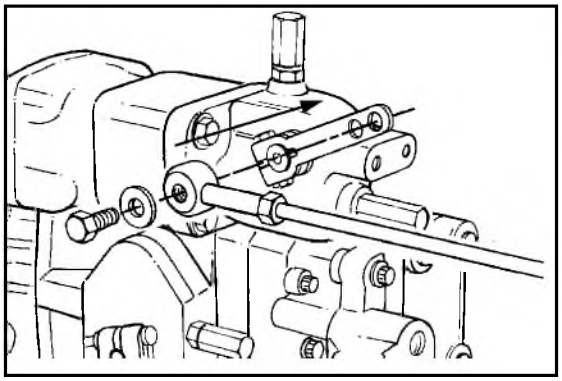

h. Install the linkage on the lever.

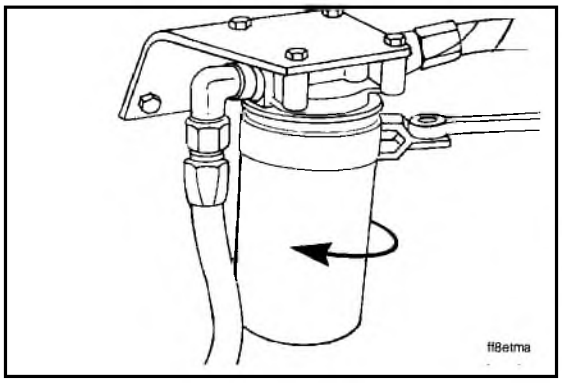


# Fuel System Maintenance (05-13)

## Fuel Filter - Replace

**NOTE:** The illustrations in this section show typical parts. The parts on your engine may look sightly different but the instructions given will apply.

1. Use Part No. 3375049 filter wrench, and remove the fuel filter.

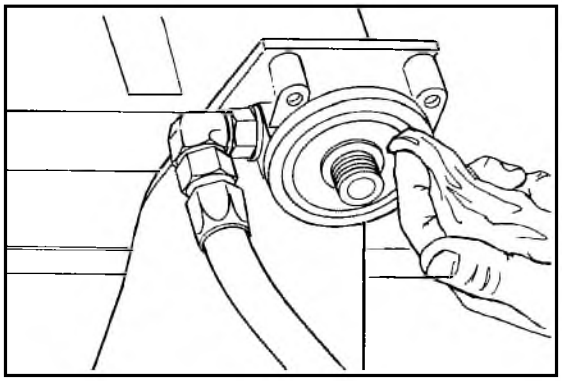

2. Use a clean, lint-free towel and clean the filter head gasket surface.

3. Apply a light film of clean engine oil to the filter gasket surface.
4. Fill the filter with clean fuel.

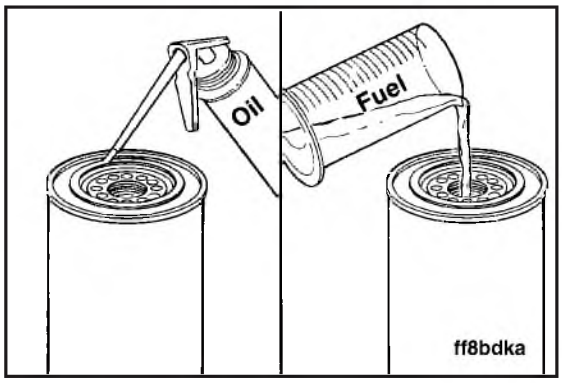


5. Install the filter on the filter head. Tighten the filter until the gasket contacts the filter head surface.
6. Tighten the filter an additional one-half to three-fourths (1/2 to 3/4) turn after the gasket contacts the filter head surface.

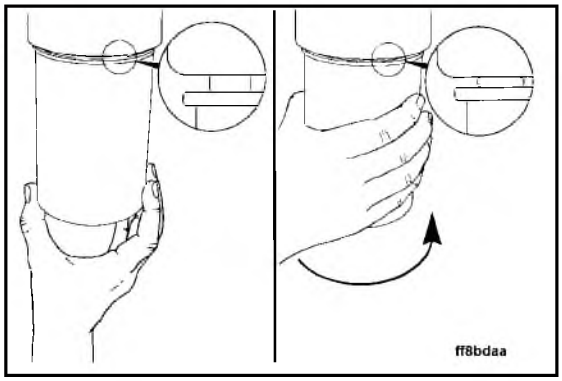


## Fuel Hose - Inspect

1. Remove the fuel hose.

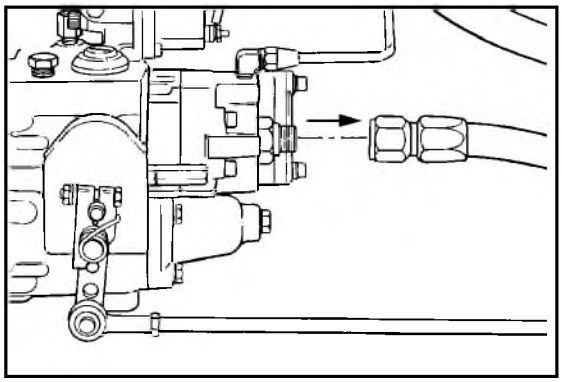

2. Visually inspect the inside of the hose and the hose fitting seating surface.
   a. The inner lining of the hose can separate from the center hose section.
   b. A separation or flap can cause a restriction in the fuel flow.
   c. Replace the fuel hose if damage is found.

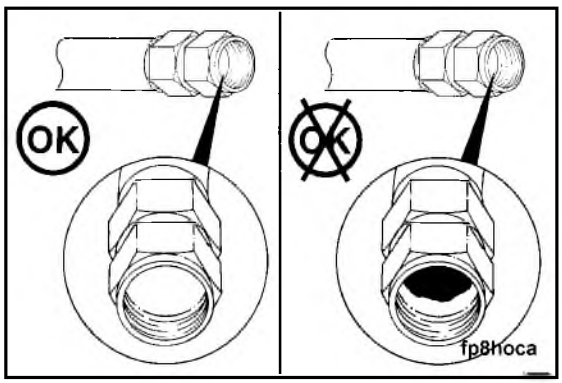

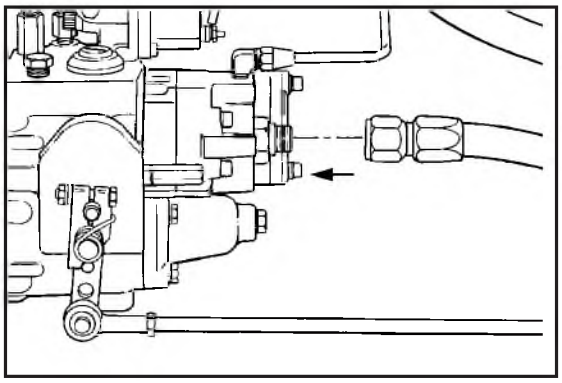

d. Install the fuel hose.

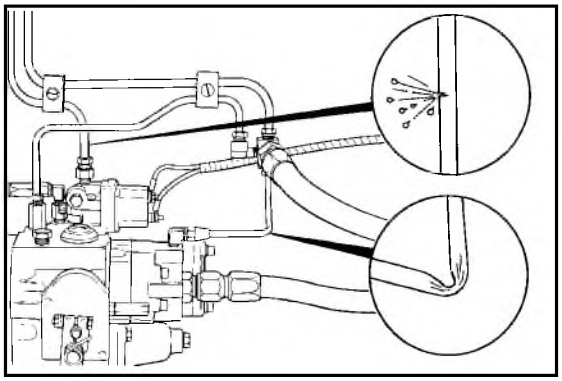

## Fuel Lines - Inspect

1. Check the metal fuel lines for sharp bends which can cause a pressure restriction.
2. Check for cracks which can cause a pressure loss.

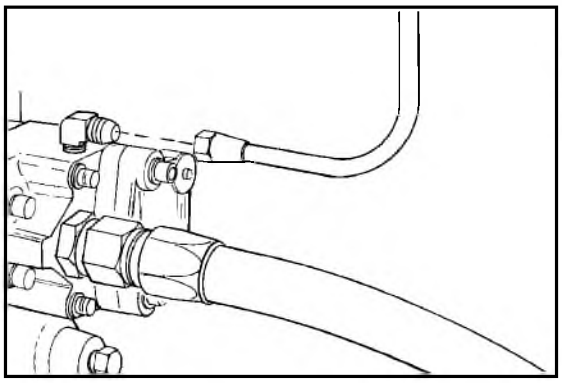

3. If a line(s) is damaged, replace the line(s).

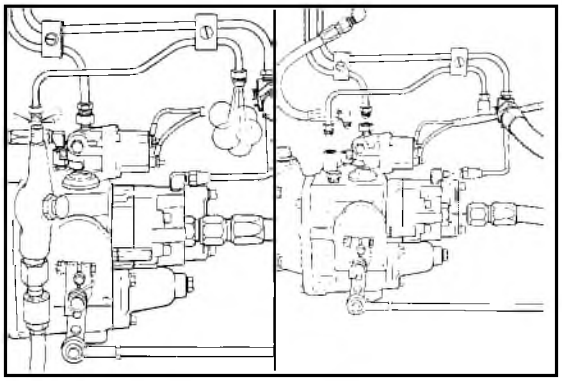

4. Use compressed air and flush the lines to remove any loose particles.
5. Install the fuel lines.

# Gear Pump Check Valve - Replace (05-14)

1. If the check valve in the gear pump return elbow stays open or closed, replace the elbow.

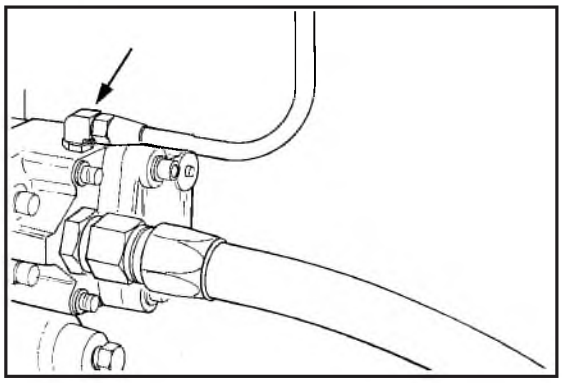

**NOTE:** Check the elbow threads. Do not install an elbow that has straight machine threads in a hole that has pipe threads. A gear pump that has straight threads will have a 19 mm [3/4 inch] spot face in the valve area. A gear pump that has pipe threads will have a 16 mm [5/8 inch] spot face or no spot face.

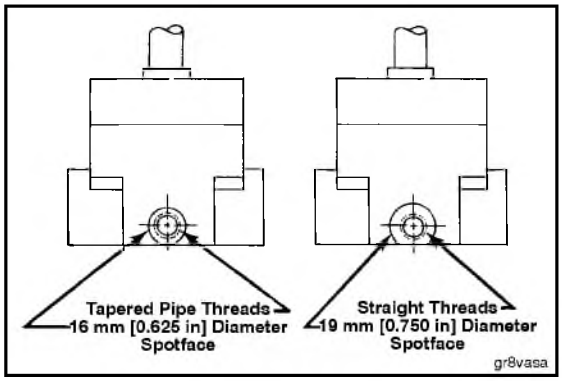


2. Remove the drain line.
3. Remove the check valve elbow.

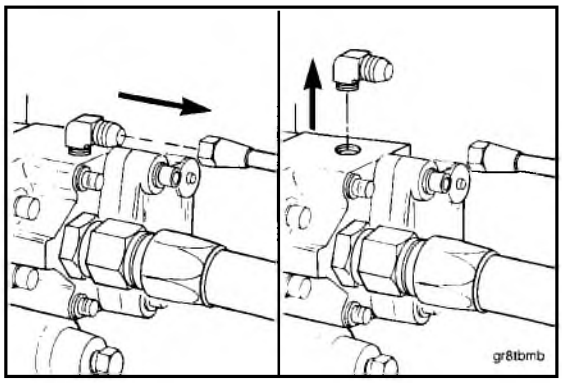


4. Install the check valve elbow that has machine threads to the maximum thread depth. Turn the elbow out until it is pointing toward the drain line. Tighten the jam nut 5.1 to 5.6 N•m [45 to 50 in-lb].
   a. Install the check valve elbow that has pipe threads until it is tight and pointed towards the drain line.

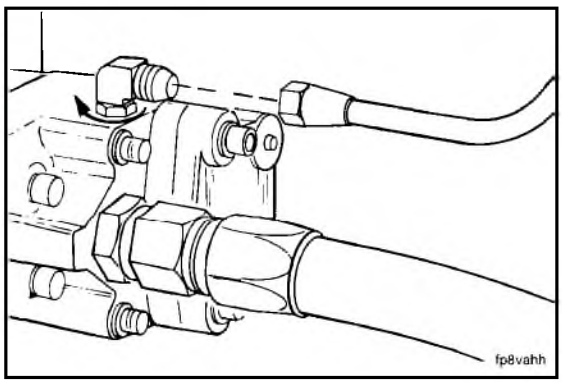

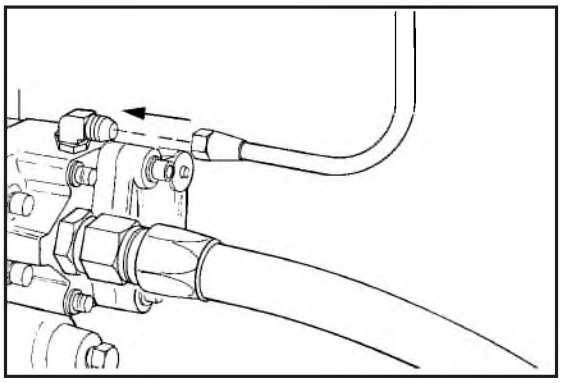

5. Install the drain line.

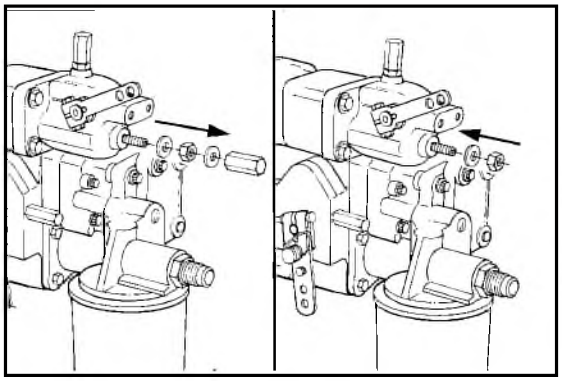

## Variable Speed (VS) Governor Leaking Fuel (05-15)

### VS Governor Adjusting Screws are Leaking Fuel

1. Remove the lock nuts and jam nuts. Discard the copper washers.
2. Install new copper washers and the lock nuts.

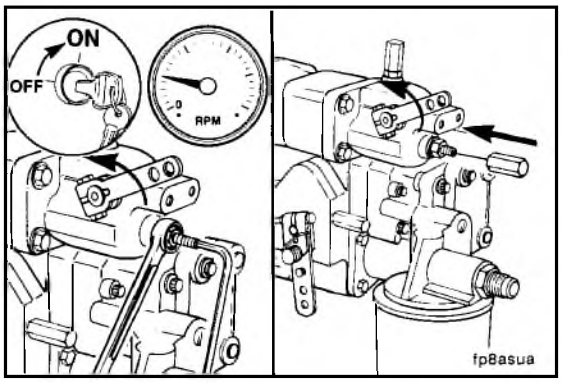


3. Install new copper washers between the jam nuts and the lock nuts. Install the jam nuts.
4. Check the governor speed adjustments. Refer to Procedure 05-05.

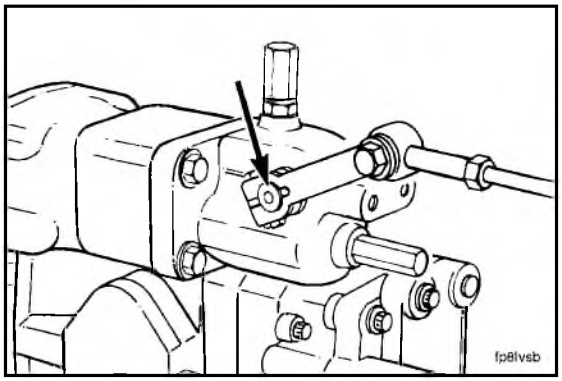


### Variable Speed (VS) Throttle Shaft Leaking Fuel

1. Mark the angle of the VS throttle lever on the VS throttle shaft. Remove the VS throttle lever.

2. Remove the VS spring pack housing cover.

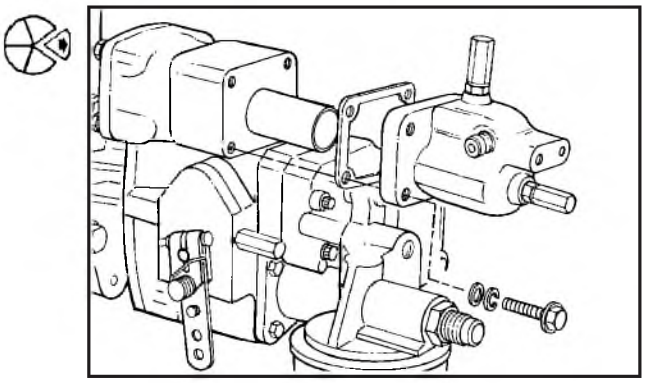

3. Loosen the set screw in the VS throttle stop.

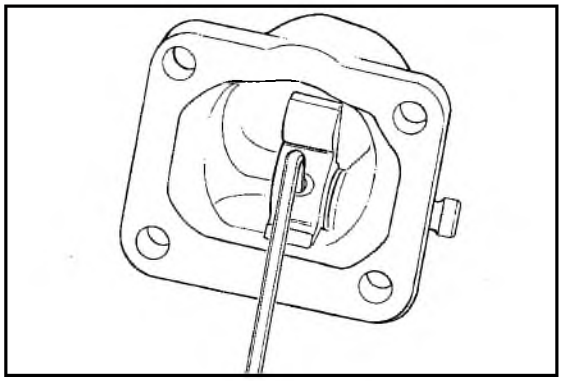

4. Remove the VS throttle shaft from the cover. Discard the o-rings.
5. Remove and discard the shaft dust seals from the cover.

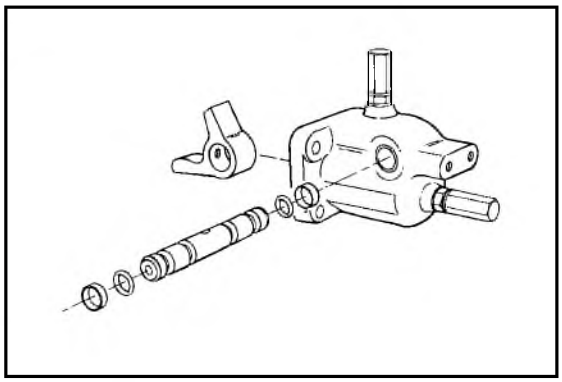

6. If fuel is leaking between the bushing and the cover, replace the bushings.
   a. Press the bushing from the cover.

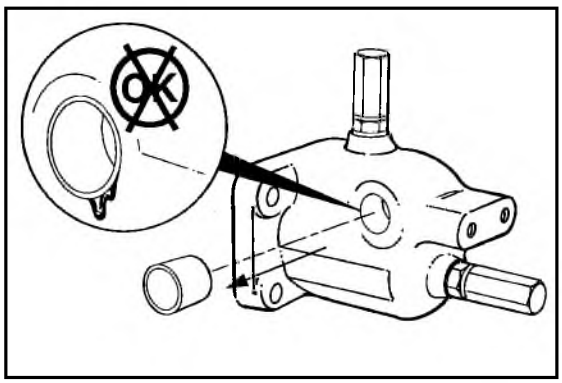

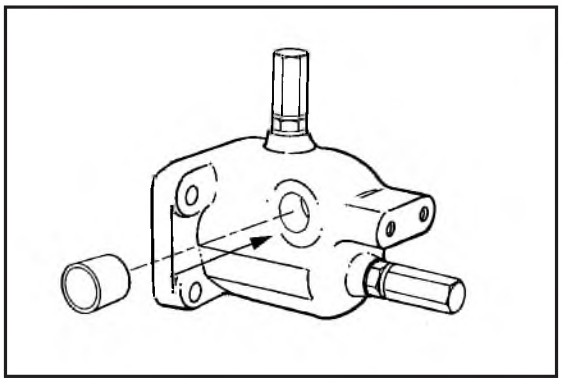

b. Install the new bushing in the cover.

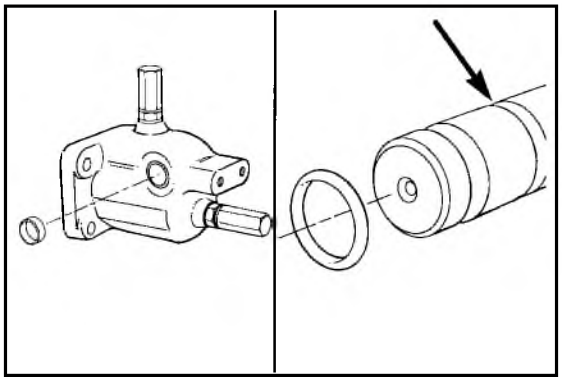

7. Install new dust seals in the cover.
8. Install an 0-ring on the shaft near the lever end.

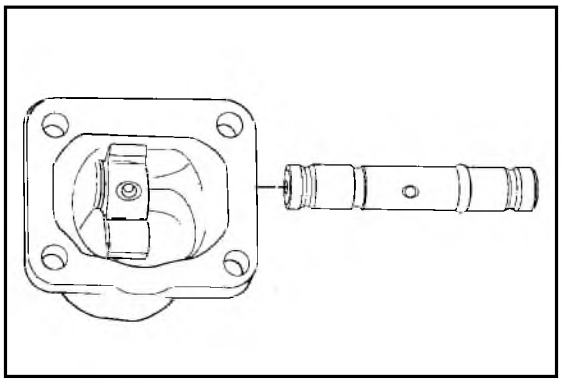

9. Place the throttle stop in the cover.

**NOTE:** The longest lever of the stop goes towards the rear adjusting screw.

10. Install the shaft in the cover and through the stop.

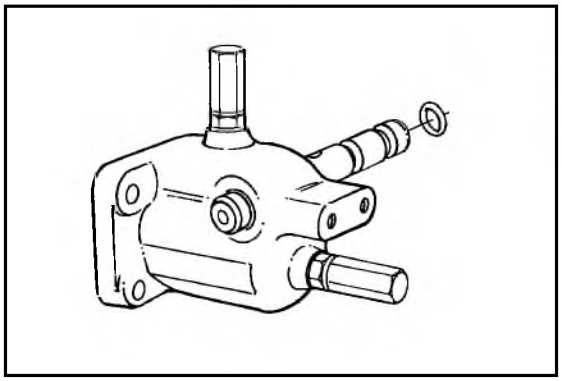

11. Push the shaft out of the other side of the cover.
12. Install the other shaft o-ring and push the shaft back into the cover.

13. Align the setscrew hole in the stop with the hole in the shaft.
14. Install the setscrew in the stop. Tighten the setscrew to 7.0 N•m [60 in-lb].

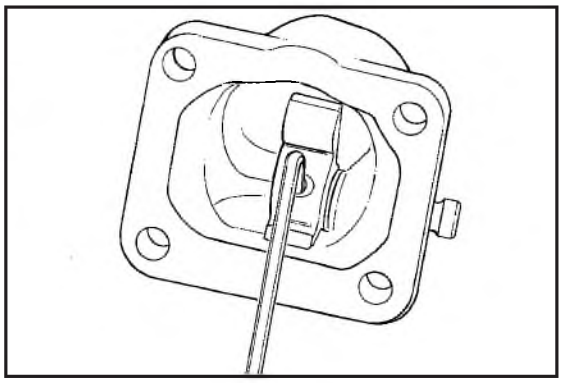

15. Assemble the cover to the fuel pump with a new gasket.

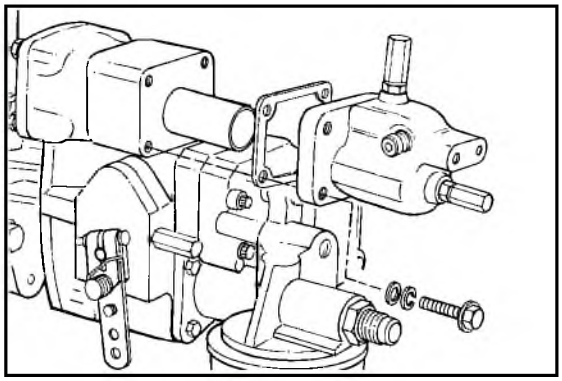

16. Align the lever with the mark on the throttle shaft to install the lever.
17. Tighten the lever retaining nut to secure the lever to the shaft.

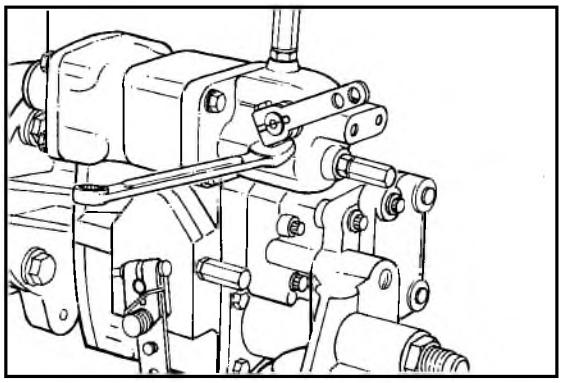

## Fuel Shutoff Valve - Check (05-16)

1. Check the override screw to be sure the valve is open.
   a. Turn the screw in (clockwise) to open the valve.
   b. Turn the screw out (counter-clockwise) to close the valve and shut off the fuel.

**NOTE:** To start the engine, in case of an electrical failure, turn the valve knob on the shutoff valve clockwise to open the valve.

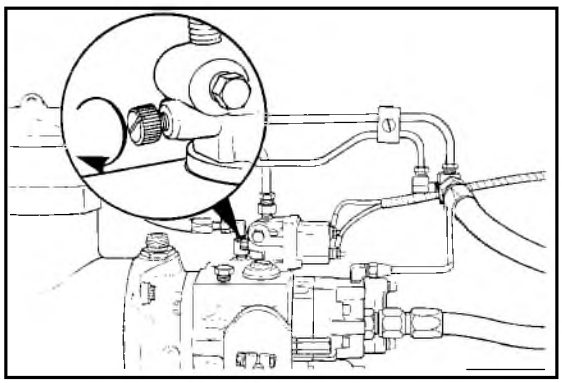

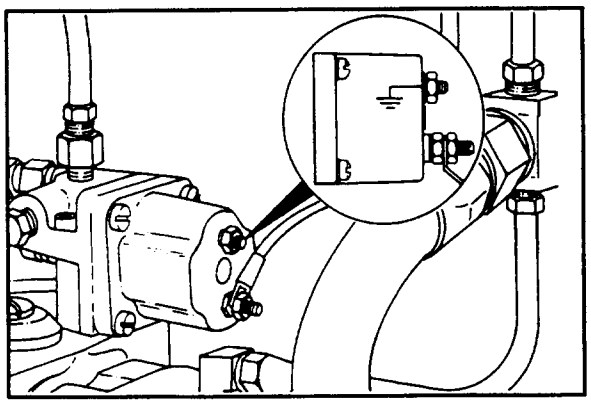

2. Most of the valves are internally grounded. If the valve has a long post and a short post, the short post is internally grounded.

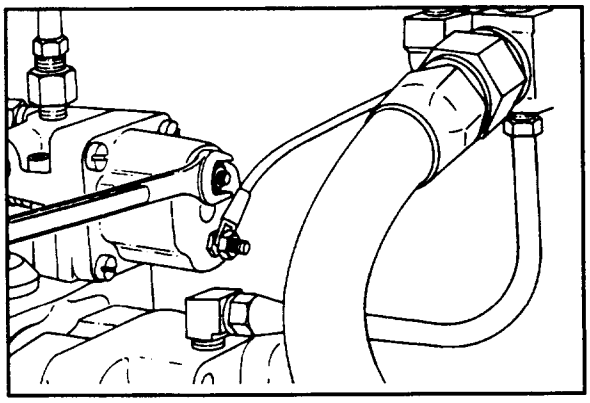

3. Make sure all of the wire connection nuts are tight, whether a wire is attached or not.

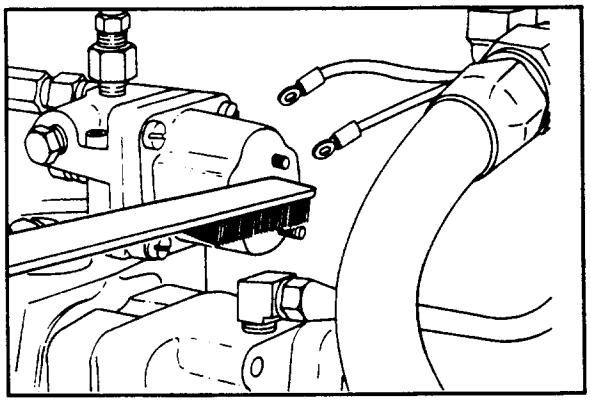

4. Use a wire brush to clean corroded terminal posts.

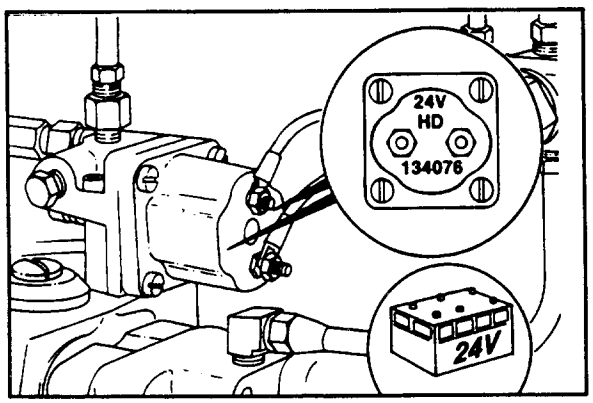


5. Make sure the shutoff valve coil is the correct voltage.
6. The coil voltage and part number are cast into the terminal connection end of the coil.

7. Check the voltage to the coil.
8. Turn the vehicle ignition ''on''.
9. Use a volt meter and check the voltage as shown. If the voltage is not correct check the electrical system. Refer to Procedure 06-06.

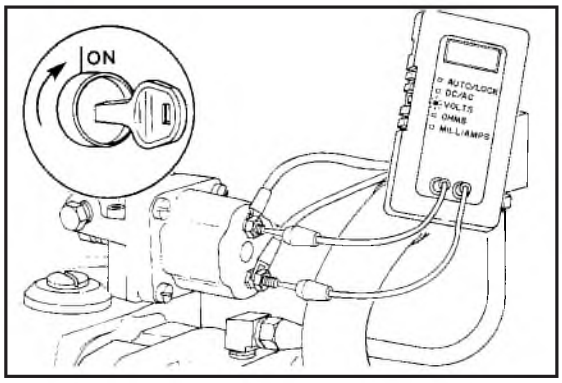


10. The coil resistance is listed on the specifications sheet. Refer to Reference 05-02.

| Part No. | Voltage | Resistance (ohms) Min | Max |
|---|---|---|---|
| 196066 | 24V | 28 | 32 |
| 209940 | 12V | 7 | 8 |

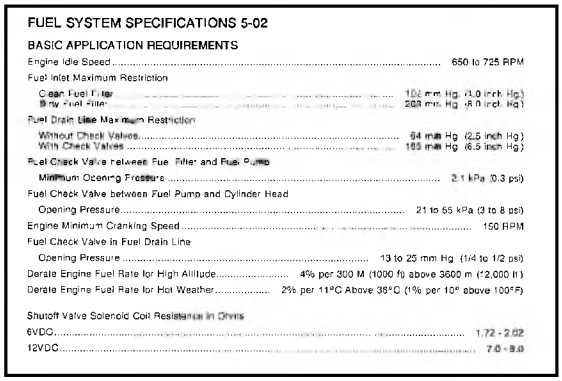

FUEL SYSTEM SPECIFICATIONS 5-02

BASIC APPLICATION REQUIREMENTS

Engine Idle Speed ..... 650 to 725 RPM

Fuel Inlet Maximum Restriction

Clean Fuel Filter ..... 102 mm Hg (3.0 inch Hg)
Dirty Fuel Filter ..... 203 mm Hg (8.0 inch Hg)

Fuel Drain Line Maximum Restriction

Without Check Valves ..... 64 mm Hg (2.5 inch Hg)
With Check Valves ..... 165 mm Hg (6.5 inch Hg)

Fuel Check Valve between Fuel Filter and Fuel Pump

Minimum Opening Pressure ..... 2.1 kPa (0.3 psi)

Fuel Check Valve between Fuel Pump and Cylinder Head

Opening Pressure ..... 21 to 55 kPa (3 to 8 psi)

Engine Minimum Cranking Speed ..... 150 RPM

Fuel Check Valve in Fuel Drain Line

Opening Pressure ..... 13 to 25 mm Hg (1/4 to 1/2 psi)

Derate Engine Fuel Rate for High Altitude ..... 4% per 300 M (1000 ft) above 3600 m (12,000 ft)

Derate Engine Fuel Rate for Hot Weather ..... 2% per 11°C Above 38°C (1% per 10° above 100°F)

Shutoff Valve Solenoid Coil Resistance in Ohms

6VDC ..... 1.72 - 2.02
12VDC ..... 7.0 - 8.0

11. Disconnect the wire(s) from the solenoid.
12. Check the coil resistance with a volt-ohm meter.
    a. Replace the coil if the resistance does not meet the specifications.

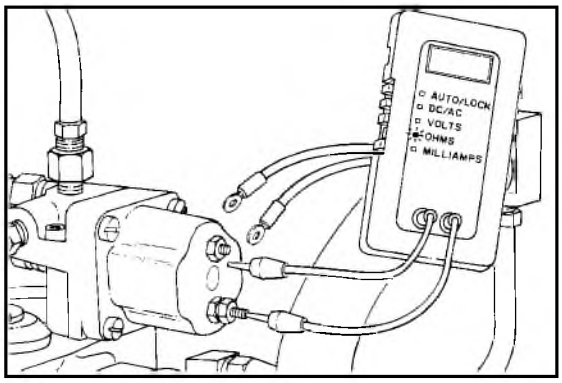


# Fuel Pump - Flow Check And Prime (05-17)

## Fuel Flow After The Fuel Pump - Check

1. Loosen the fuel line at the shutoff valve while the engine is cranking. If fuel does not come out of the connection, the pump must be primed.

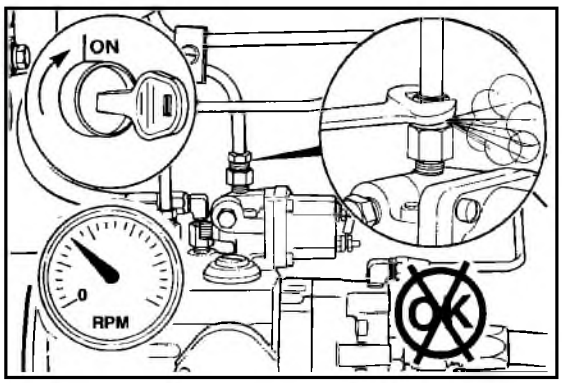

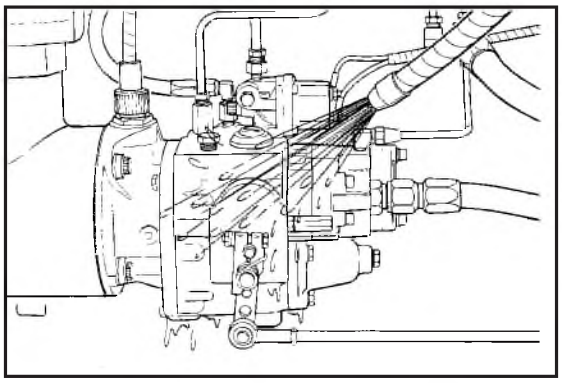

## Fuel Pump - Prime

1. To reduce engine cranking time, prime the fuel pump.

**NOTE:** If the fuel pump is dirty, clean the outside of the pump.

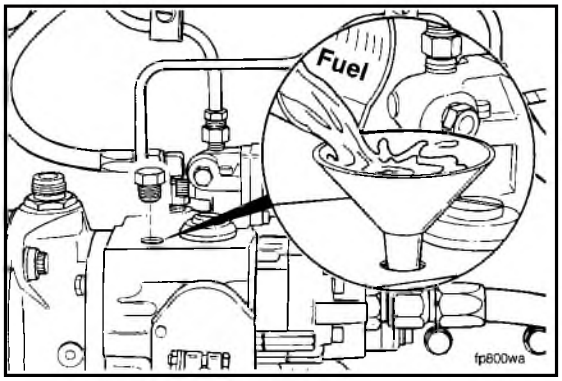


**NOTE:** Only automotive fuel pumps contain a priming plug.

2. Remove the plug from the top of the housing.
3. Fill the housing with clean fuel.

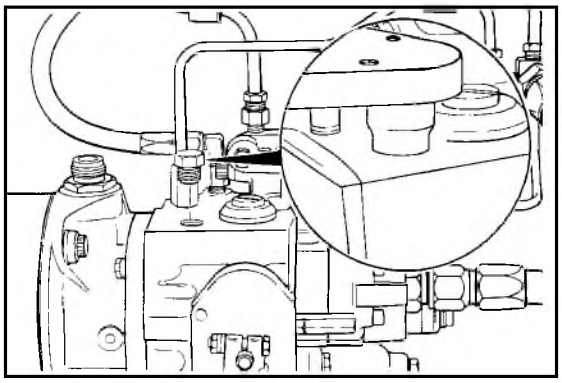

4. Tighten the plug to 30 N•m [20 ft-lb].

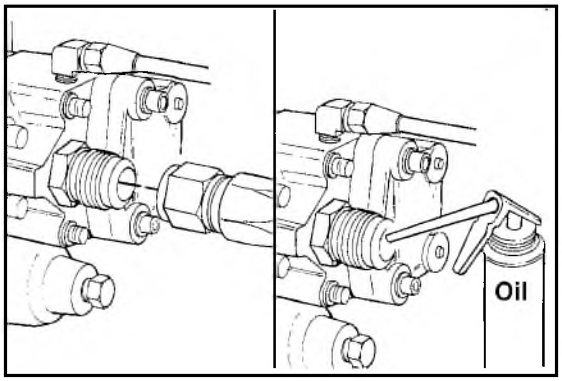


5. If the priming plug is hard to remove or the fuel pump is a VS type, remove the fuel supply hose to the gear pump.
6. Fill the gear pump with clean engine lubricating oil. Engine lubricating oil will seal the gears in the fuel pump and cause fuel to be sucked into the pump.

7. Install the supply hose to the gear pump.

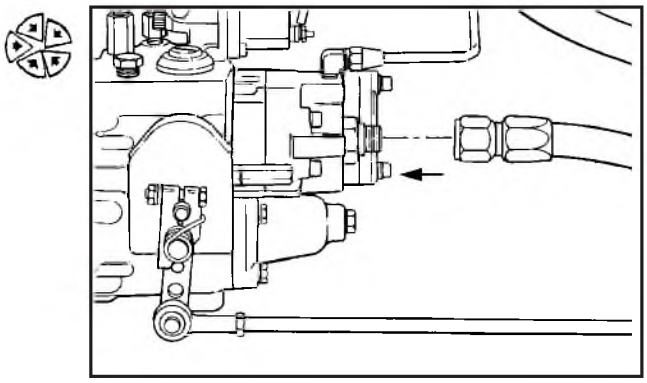

8. Use the starter and crank the engine until fuel comes out of the connection at the shutoff valve. If the pump does not prime, refer to Procedure 05-18.
9. Tighten the connection.

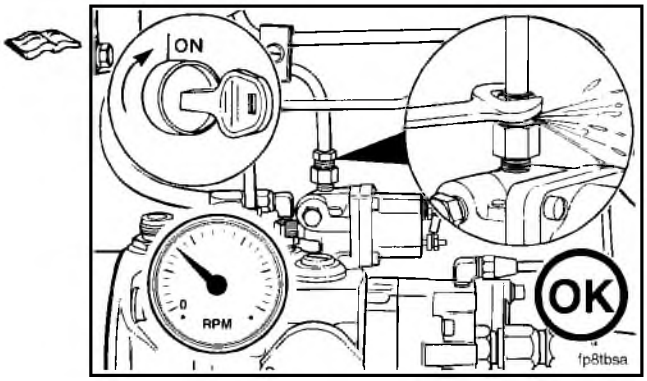


10. Start the engine. Operate at high idle until all air is removed from the fuel lines.

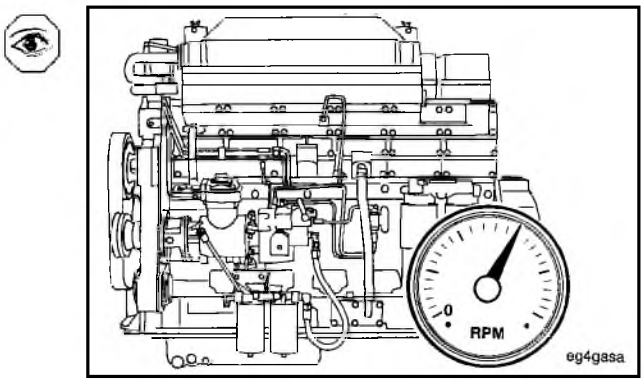


## Fuel Pump Rotation Check (05-18)

1. Remove the tachometer drive cable from the fuel pump.

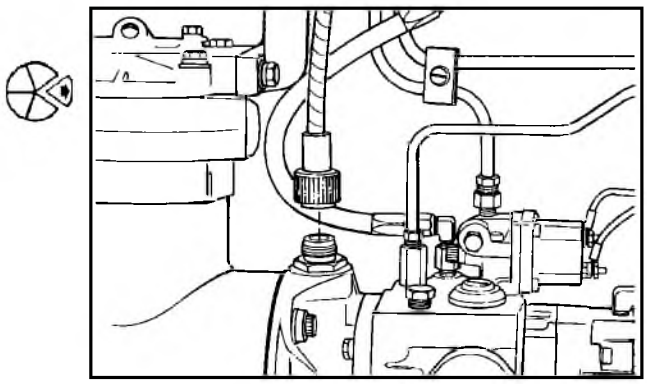

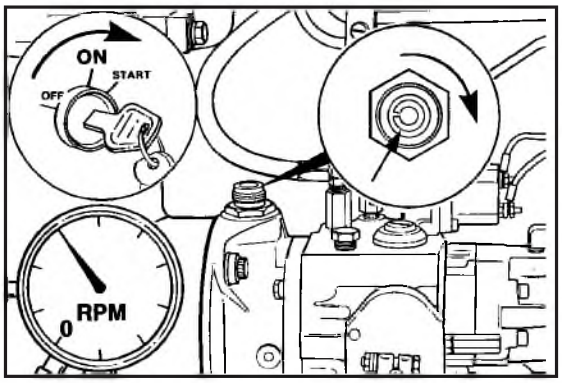


2. Crank the engine and make sure the tachometer drive shaft is turning.
3. If the tachometer drive shaft does not turn, remove the fuel pump. Refer to Procedure 05-11. Check the air compressor and accessory drive operation.

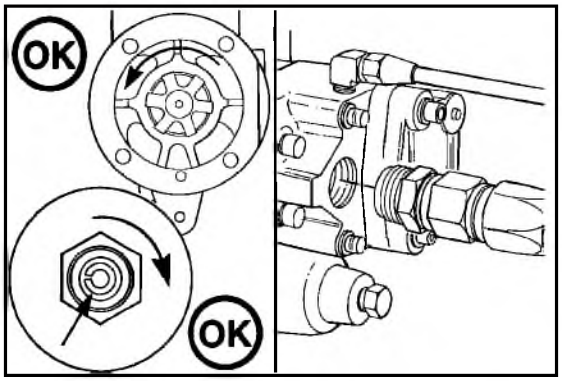


4. If the tachometer drive shaft rotates, check the gear pump for rotation.
   a. Remove the fuel supply hose at the gear pump.

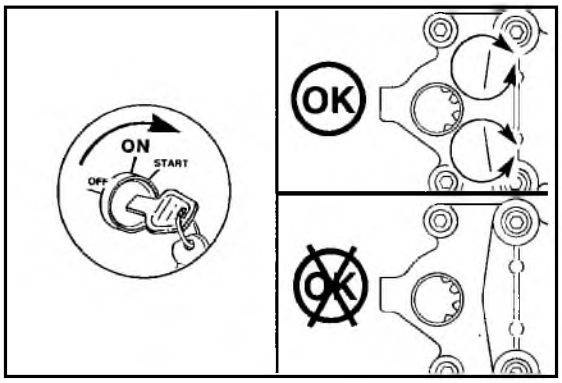


   b. Look into the gear pump and crank the engine. The gear pump gears must turn.
   c. If the gear pump gears do not turn, replace the fuel pump. Refer to Procedure 05-11.

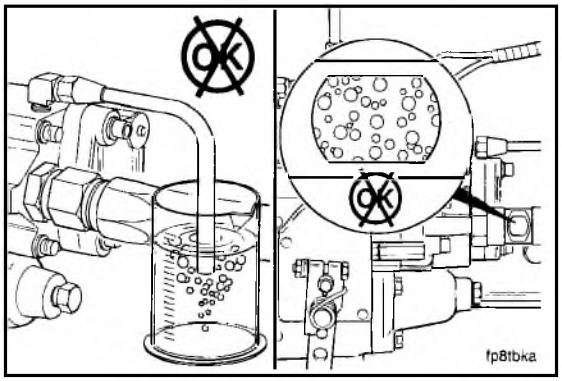


## Air Leaks (05-19)

1. There are two good methods to check for air in the fuel suction line.
   a. Check gear pump drain.
   b. Use a sight glass, Part No. ST-998, or equivalent and check the suction line.

   Both methods are described in the following.

c. In most cases, operation at high idle will provide sufficient fuel flow to determine if an air leak exists. However, in some cases it may be necessary to check for air at the full fuel position.

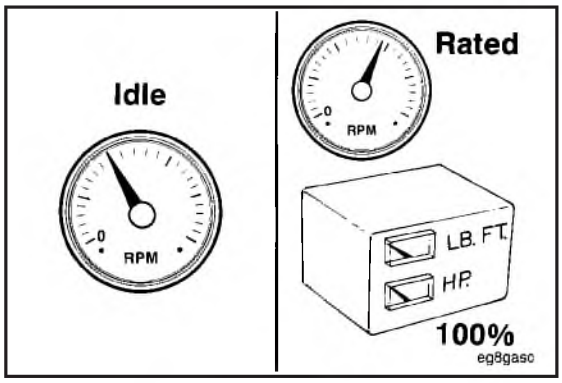


d. One method of measuring at the full fuel position is to operate the engine at rated RPM and full load (wide open throttle). This may be accomplished by using a dynamometer, the hydraulics, or a load bank if the equipment allows.

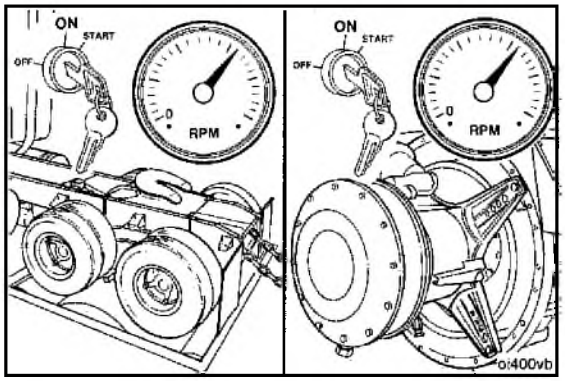


e. If it is not possible to load the engine, install a No. 6 line containing a 7 mm [1/4 inch] needle valve at the fuel pump solenoid. Route the line back to the fuel tank.

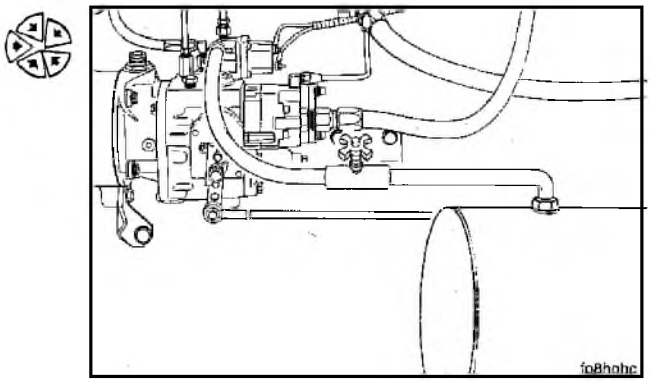

f. Operate the engine at high idle. Slowly open the valve until the engine RPM drops to rated rpm. This is the ''full fuel'' position.

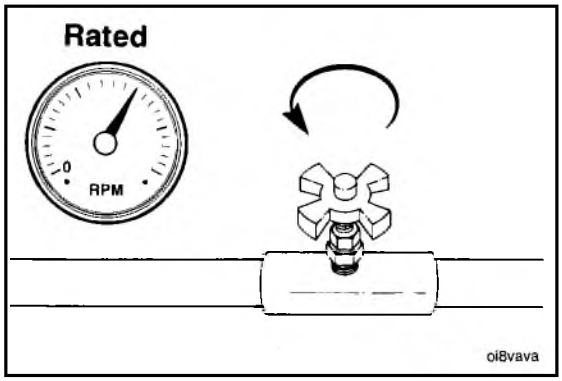

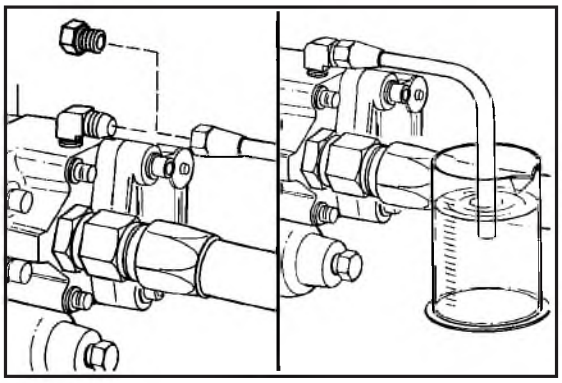

## Air Leak in Fuel Suction Line - Check gear Pump Drain

1. Remove the gear pump cooling drain line from the check valve and plug the line.
2. Install a hose on the check valve and place the other end of the hose in a container.

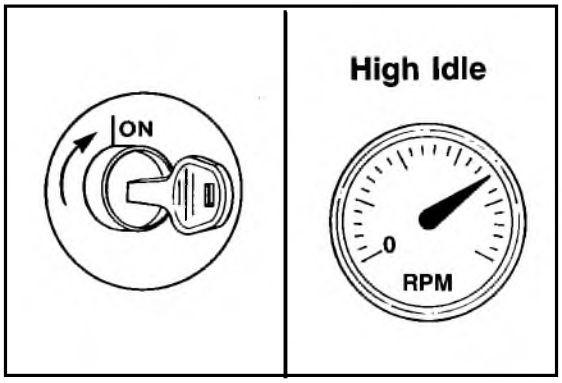


3. Operate the engine at high idle with no load, or in the full fuel flow position.

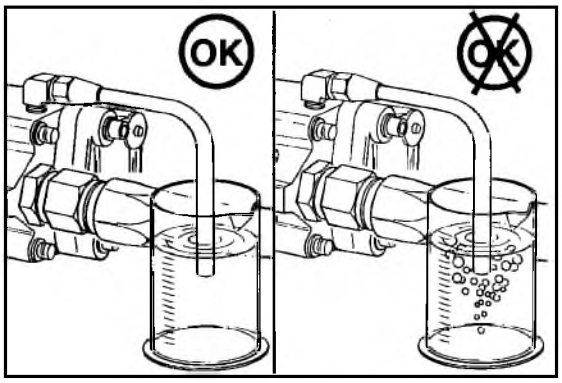


4. Place the end of the hose below the surface of the fuel. If air is in the fuel pump suction line, bubbles will be visible in the fuel.

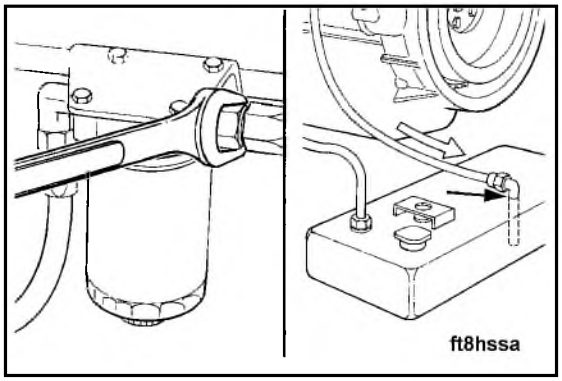


5. If an air leak is found perform the following:
   a. Tighten the hose connections and the fuel filter.
   b. Check the drop tube in the fuel tank for damage.

c. Correct the air leak and test again for other leaks.

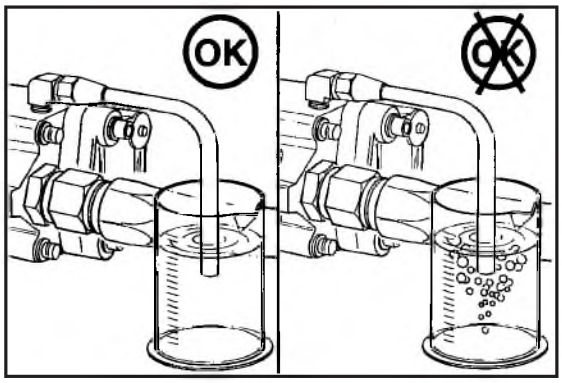


d. Remove the hose from the check valve and the plug from the cooling drain line.

e. Install the drain line on the check valve.

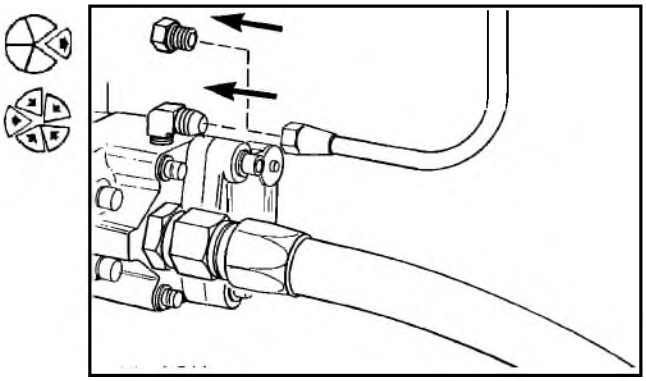

## Air Leak in Fuel Suction Line - Check With Sight Glass.

1. Remove the fuel suction line.
2. Install a sight glass, Part No. ST-998, in the line.
3. Operate the engine at high idle with no load, or at the full fuel position.

**NOTE:** A small air leak will have a ''milky'' appearance.

**NOTE:** A large air leak will look like bubbles in the fuel.

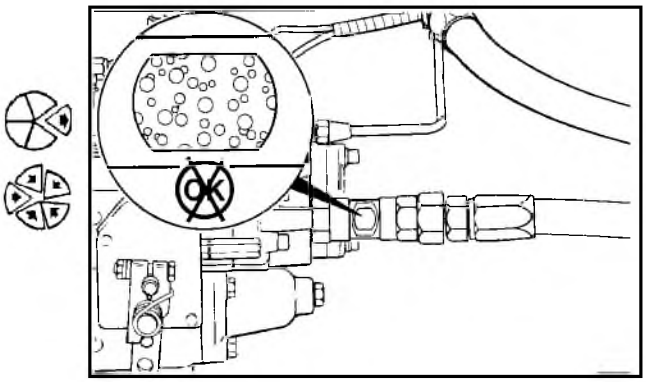


4. If an air leak is found, visually inspect the fuel lines and fittings for damage. Check for loose connections.
5. Replace the damaged lines or tighten the loose connections.

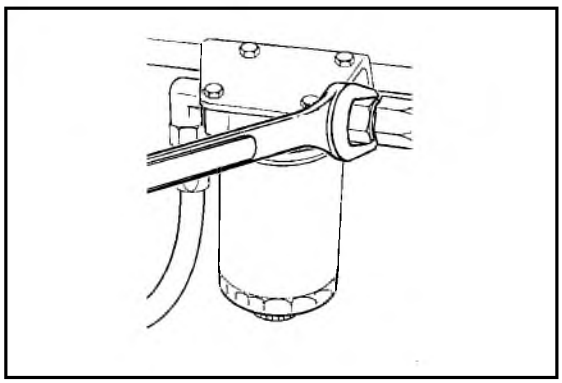

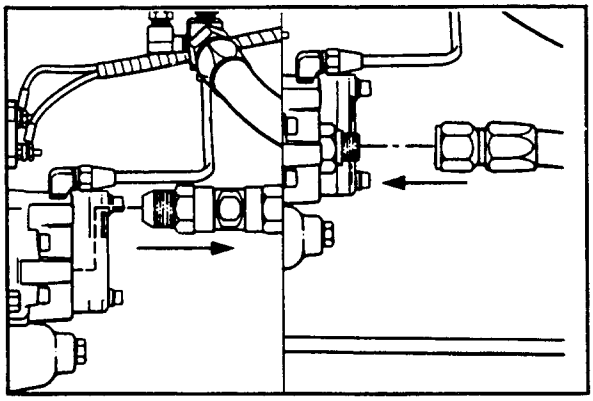

6. Remove the sight glass and install the suction hose.
7. Test the engine again for other fuel leaks.

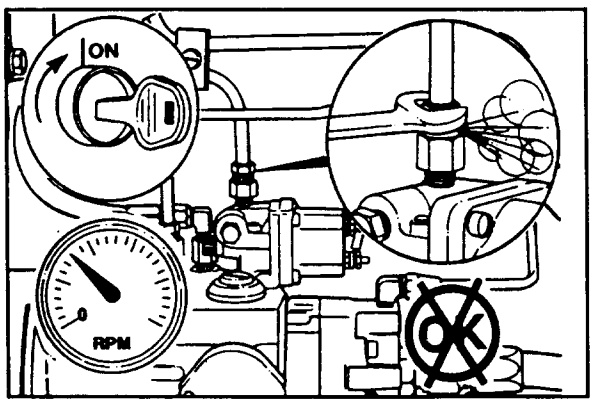


## Air leak in fuel pump - check

1. Operate the engine to create pressure in the fuel lines.
2. Loosen the fuel outlet line at the shutoff valve to remove the air from the fuel pump.

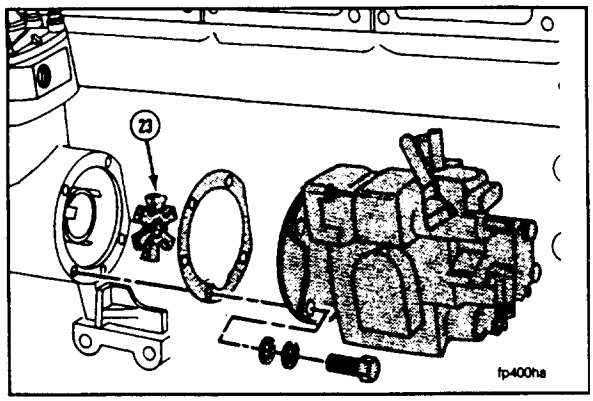


3. If the air continues, remove and repair the fuel pump. Refer to Procedure 05-11.

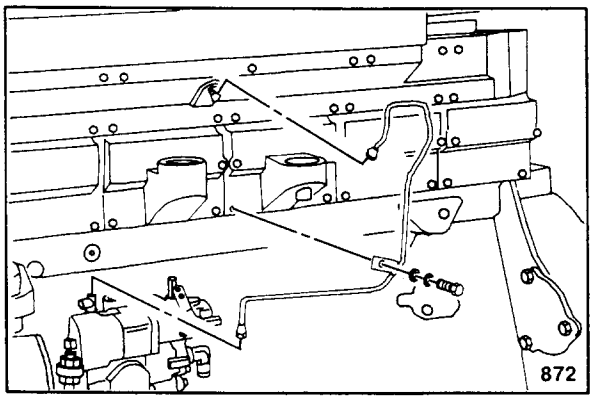


## AFC - Check For Air Leak (05-20)

1. Remove the AFC air inlet line.
2. Install a cap on the connection at the intake manifold.

3. Install the pressure pump, Part No. 3375515, or equivalent.
   a. If the pressure pump is not available, install a regulated air pressure hose, with shutoff valve, to the line.

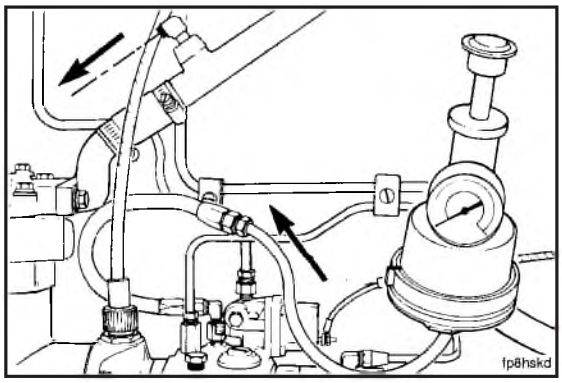


4. Apply 170 kPa [25 psi] air pressure to the AFC air supply line.

**NOTE:** If shop air is in use, close the shutoff valve.

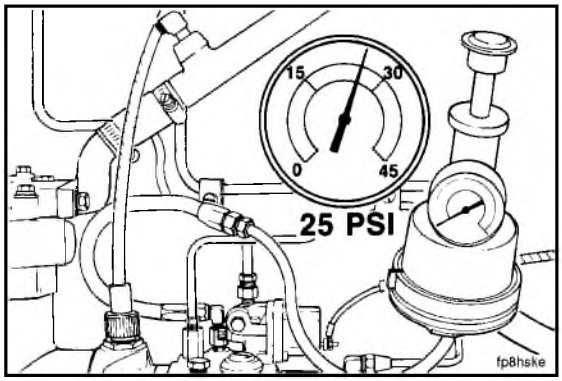


5. If the engine application contains overhead fuel tanks, check for air coming out of the AFC leak kit valve.
6. If no air is coming out of the valve, replace the valve.

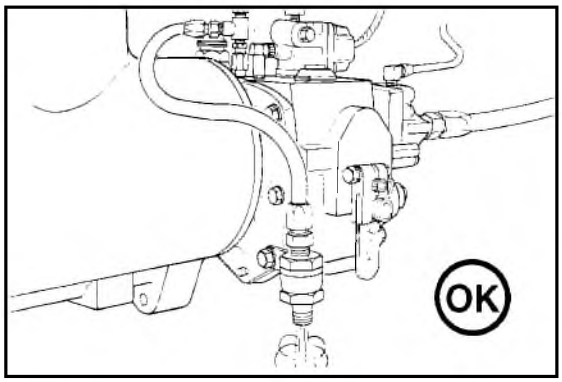


7. Install a test cap (1) to the AFC leak kit valve to prevent leakage during this test.

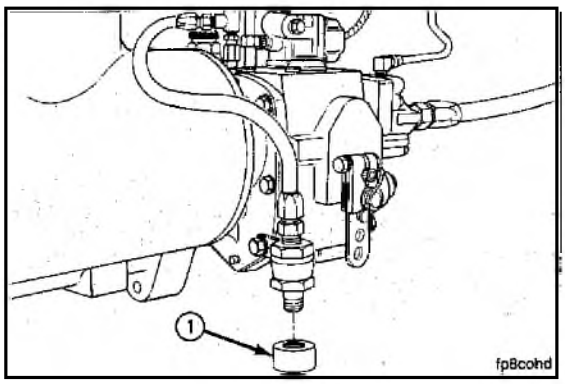

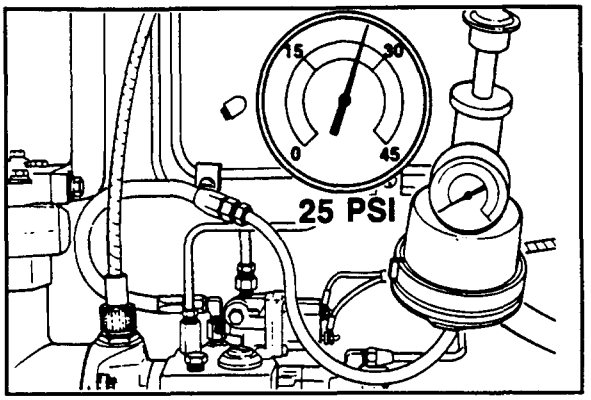


8. Apply 170 kPa [25 psi] air pressure to the AFC air supply line.

**Note:** If shop air is in use, close the shutoff valve.

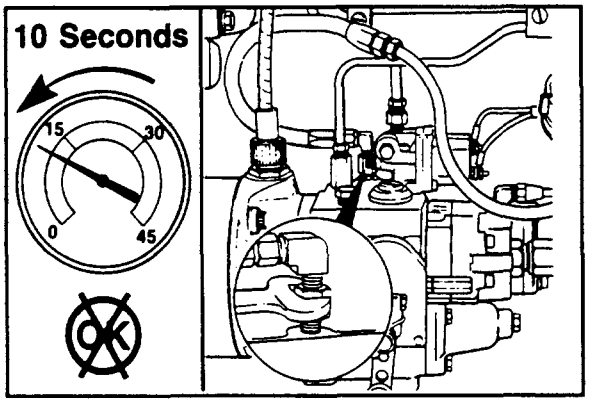


9. If the pressure drops any within 10 seconds, check the line and connections for leaks.
10. Replace the line or tighten the connection if a leak is found.

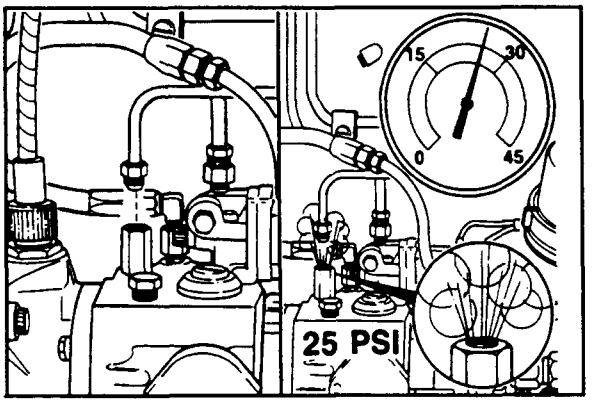


11. If the pressure drops and the line and connections do not leak, remove the AFC fuel return line from the top of the fuel pump.
12. Apply 170 kPa [25 psi] to the AFC air supply line.
13. When the AFC bellows moves, a puff of air or a small amount of fuel will come out of the top of the fuel pump.

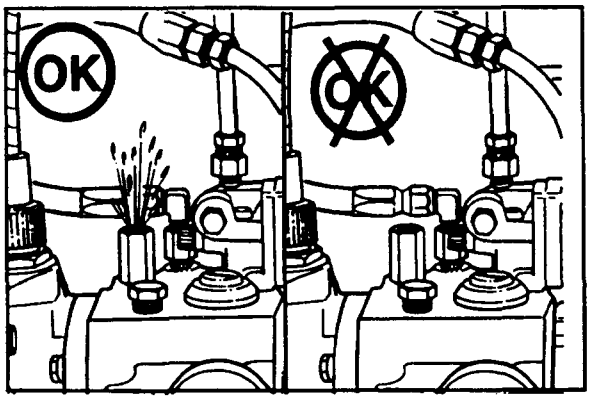


14. If the air does not come out of the top of the fuel pump and the pressure does not drop, the check valve connection in the AFC cover plate can have a restriction.

15. Remove and clean or replace the check valve.

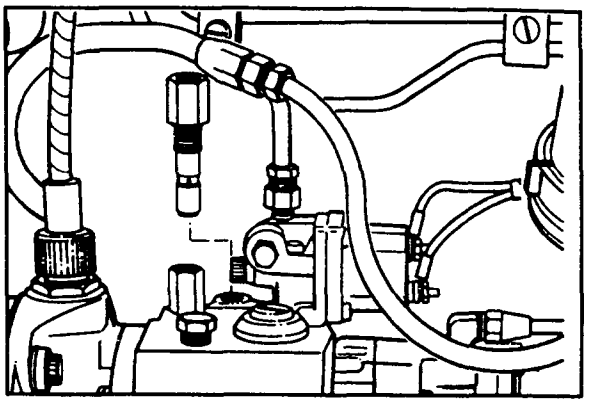

16. If the air flow is continuous from the top of the fuel pump, the AFC bellows is defective.
17. Replace the fuel pump. Refer to Procedure 05-11.

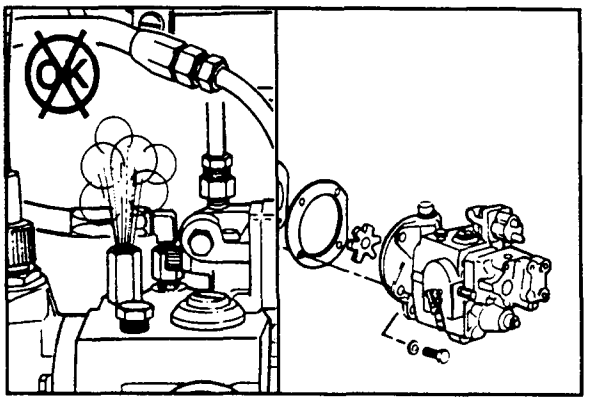

18. Remove the pressure pump or shop air line.

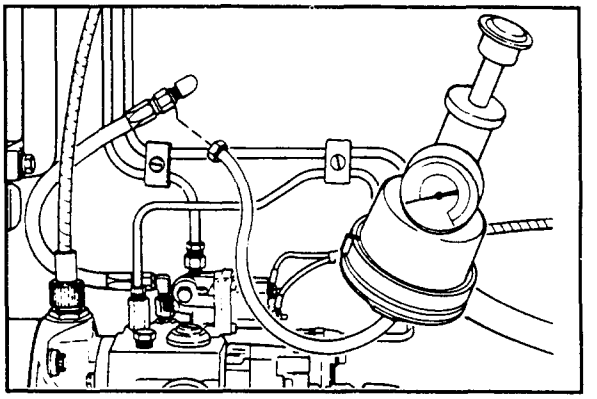

19. Install the AFC air inlet line.

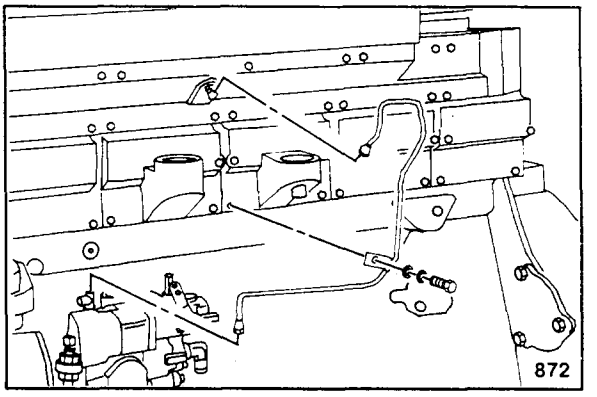

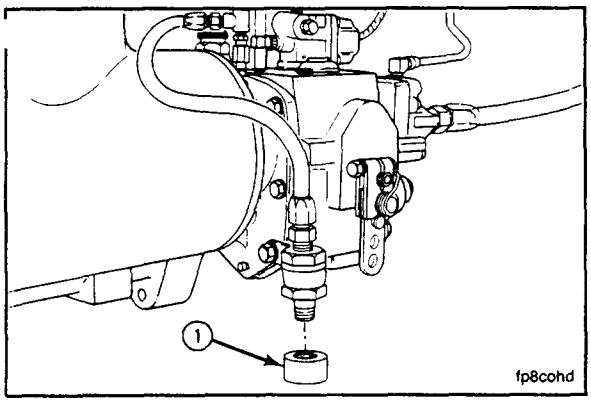


20. Remove the test cap (1) from the AFC leak kit valve.

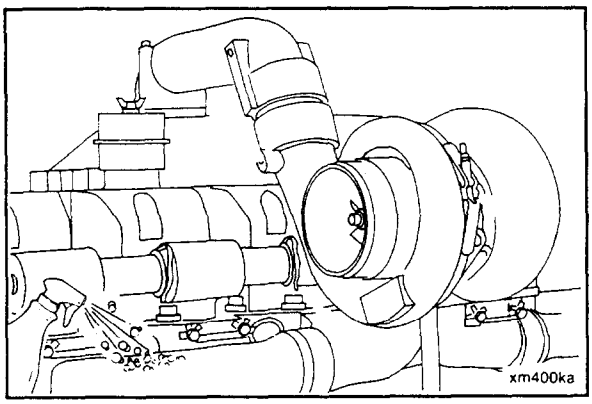


## Cylinder Misfire (05-21)

**Note:** A cylinder that is not firing will have a lower exhaust temperature than the other cylinders.

### Method 1

1. Spray the cold exhaust manifold with a soap bubble and water solution.

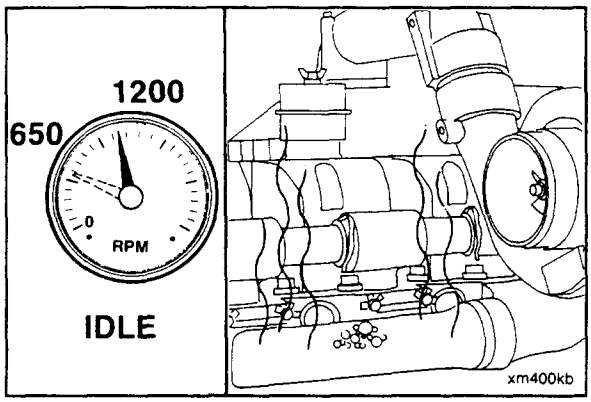


2. Operate the engine at moderate speed (1200 RPM). Observe the rate at which the bubbles boil off the manifold. The cylinder that is misfiring will take the longest to boil away the bubbles.

**Caution: Do not cool the exhaust manifold with water. This could cause cracks in the manifold.**

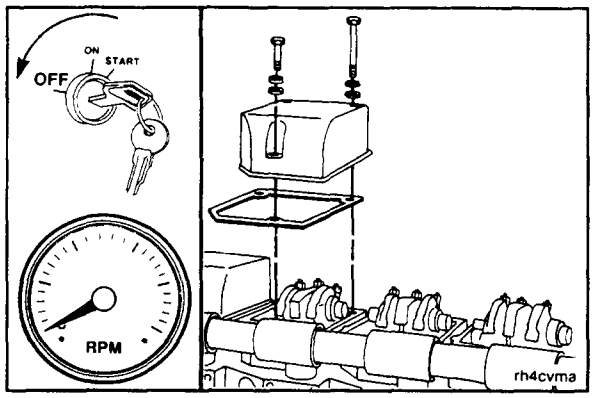


### Method 2

1. After the engine is at operating temperature (coolant is 70°C [160°F] or higher), shut the engine off and remove the rocker lever covers.

**Caution: Whenever the engine is running and the rocker lever covers are removed, there is significant oil splash. Wear safety glasses and protective clothing to prevent personal injury.**

2. Place a shield over the exhaust manifold to prevent the possibility of fire.

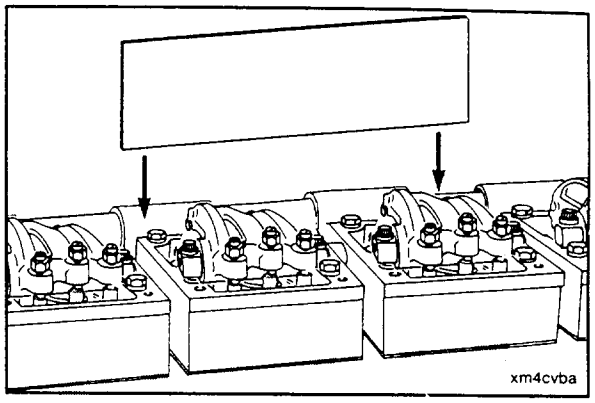


3. Use a rocker lever actuating tool, Part No. 3376869, or equivalent.
4. Hold the injector plunger down while the engine is running at low idle. This will stop the fuel flow to that injector.
   a. If the engine RPM decreases when the injector is held down, the injector is good.
   b. If the engine RPM does not decrease, replace the injector. Refer to Procedure 05-09.

   Perform this test on each cylinder.

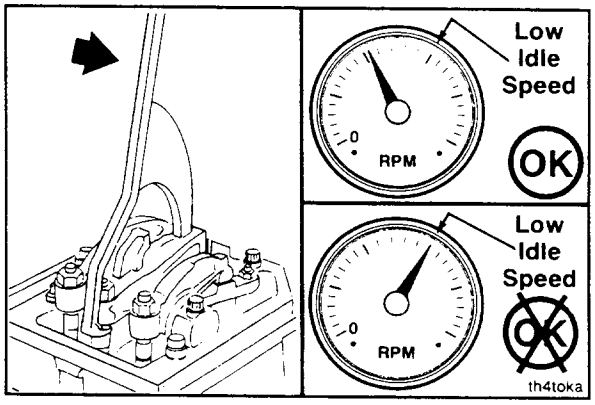


## Engine Oil Dilution By Fuel (05-22)

Two methods are commonly used to determine the cause of oil dilution by fuel, the Black Light Procedure and the Fuel passage - pressure test.

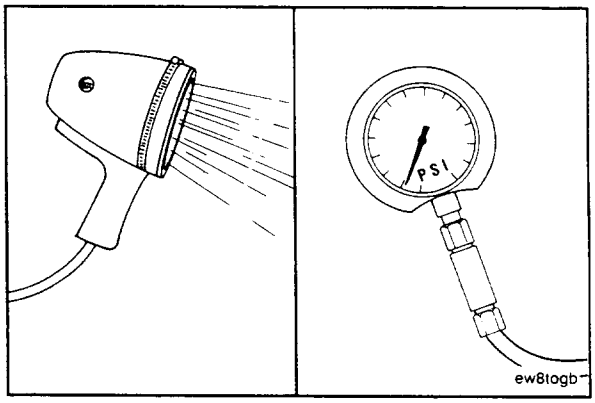


### Black Light Procedure - Check

1. Operate the engine at low idle for 10 minutes.

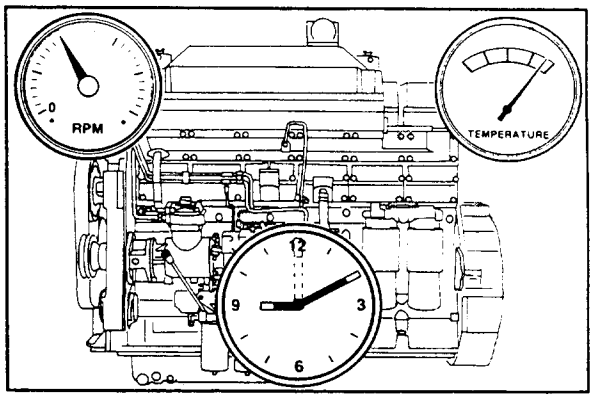

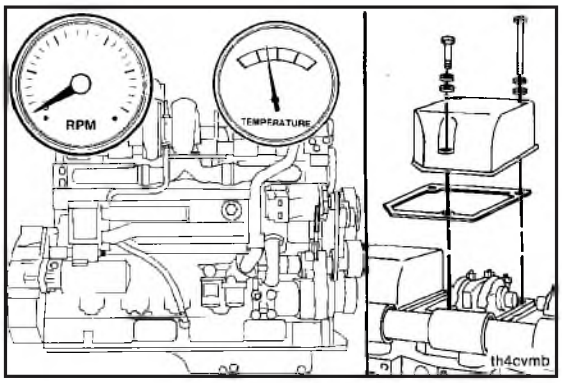

2. Shut the engine off.
3. Remove the rocker lever covers, refer to Procedure 07-04.

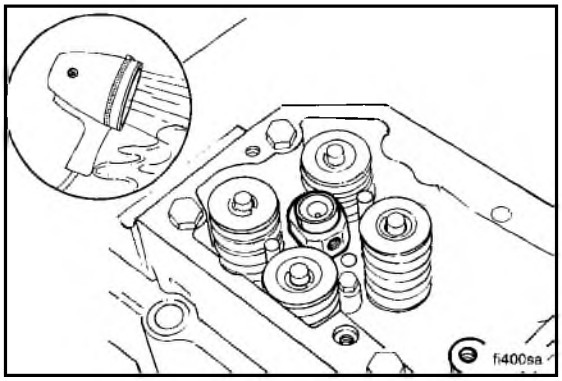

4. Use a high intensity black light, Part No. 3377253 or 3377394. Check for fuel leakage around the injectors.

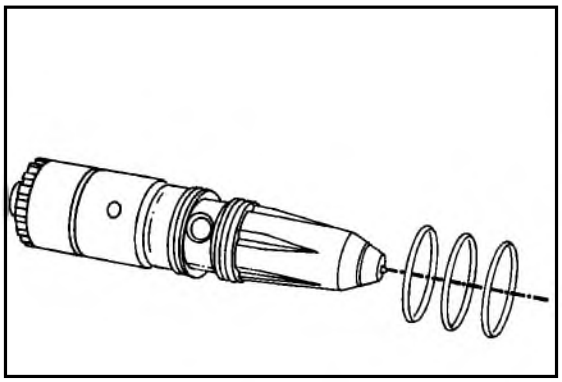

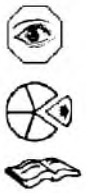

5. If leakage is found around the outside of the injector, check the top injector o-ring for damage.
   a. Remove the injector and replace all three o-rings. Refer to Procedure 05-09.

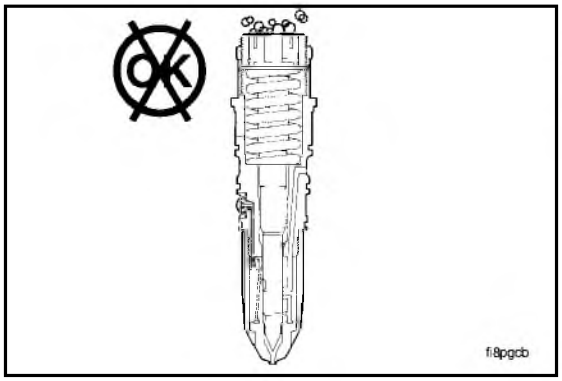

6. Check for leakage from the inside of the injector adapter. Refer to Procedure 05-09.

7. Replace the rocker lever covers and related parts. Refer to Procedure 07-04.

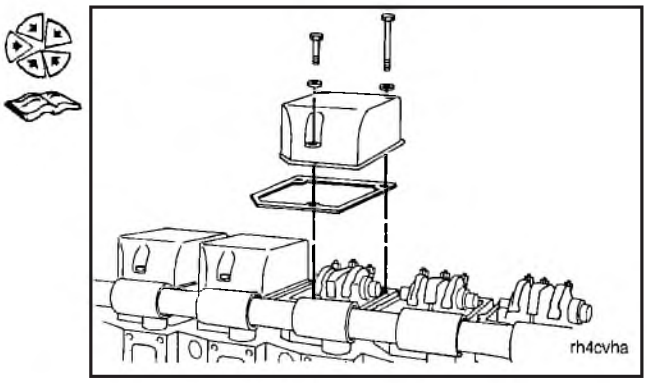


## Fuel Passage - Pressurize

1. Remove the injector drain and return check valve (if used).

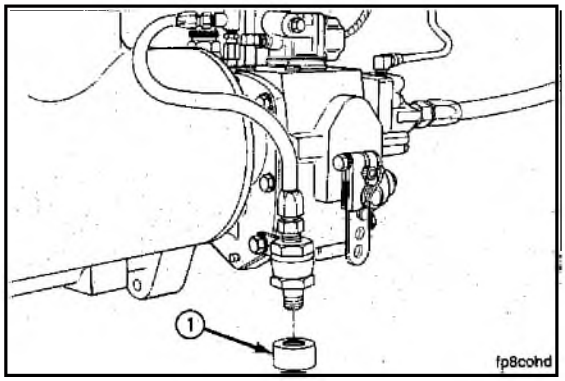


2. Remove the fuel line from the solenoid valve and install a cap on the line.

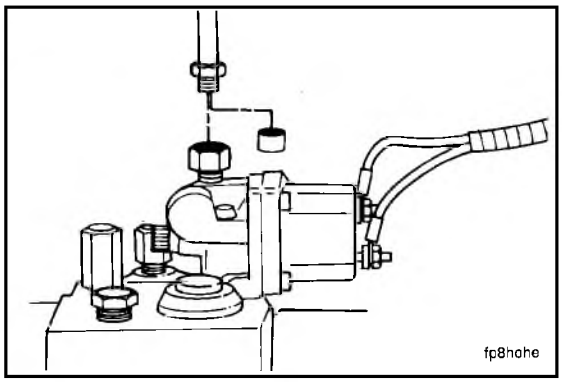


3. Remove the rocker lever covers, refer to Procedure 07-04.

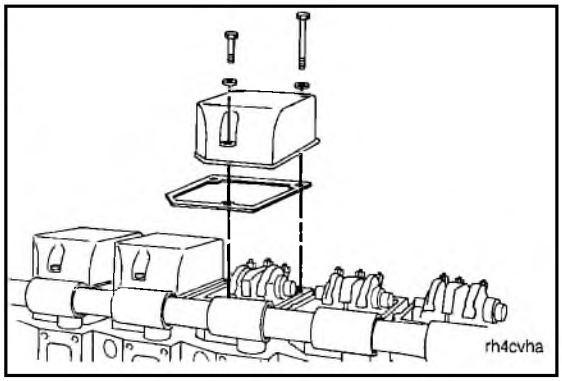

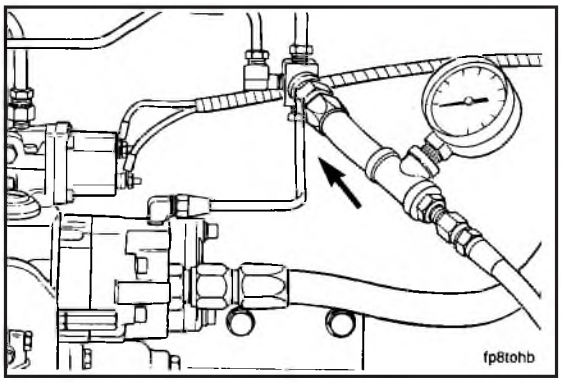


4. Install a regulated air supply to the fuel drain line connection.
5. Adjust the air pressure to 10 psi.

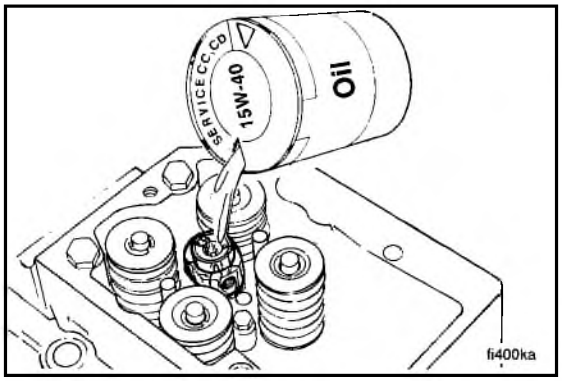


6. Pour a steady stream of engine oil over each injector and check for bubbles.

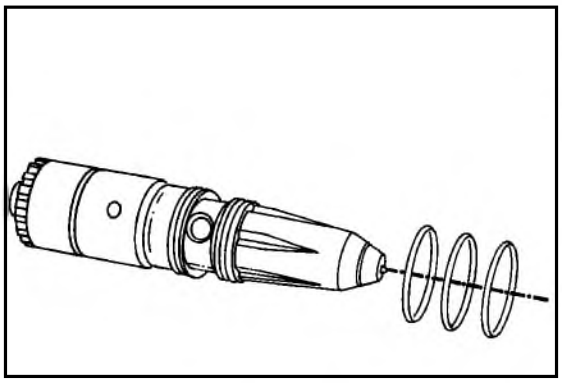

7. If there is leakage around the outside of the injector, check the top injector o-ring for damage.
   a. Remove the injector and replace all three o-rings. Refer to Procedure 05-09.

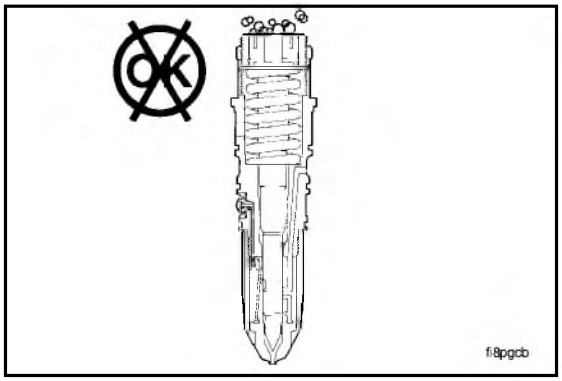


8. If the leakage is through the inside of the injector adapter, replace the injector. Refer to Procedure 05-09.

9. Remove the air line from the fuel drain connection. Install the fuel line.

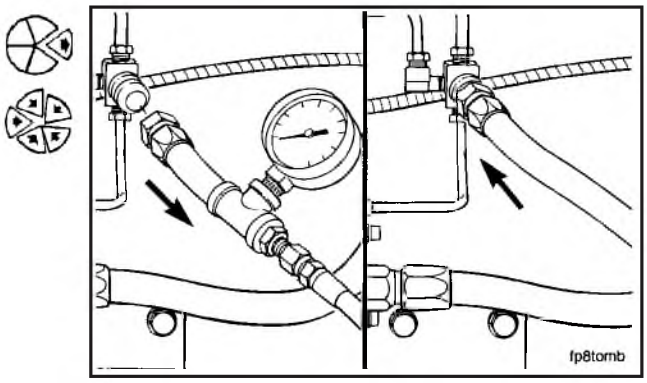


10. Remove the cap from the fuel supply line. Install the fuel line to the shutoff valve.

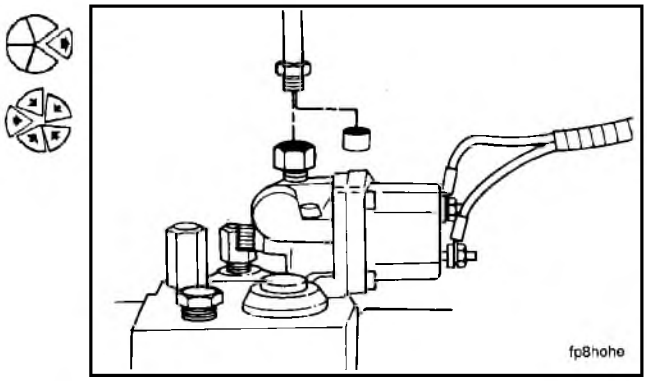


11. Install the rocker lever covers and related parts. Refer to Procedure 07-04.

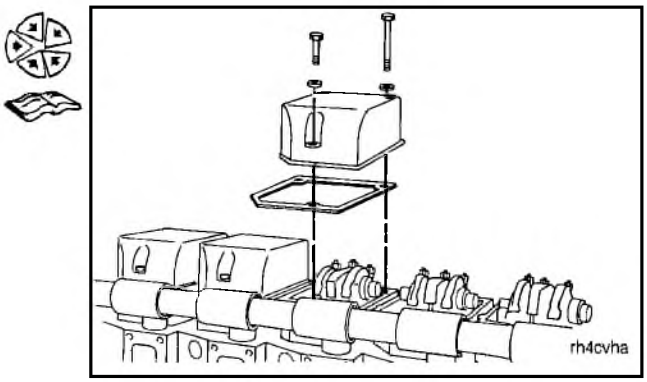


## Fuel Line Restriction (Suction) - Check (05-23)

1. The fuel pump must be in the ''full fuel'' position to accurately measure fuel line restriction.

   a. Operate the engine at rated RPM and full load.

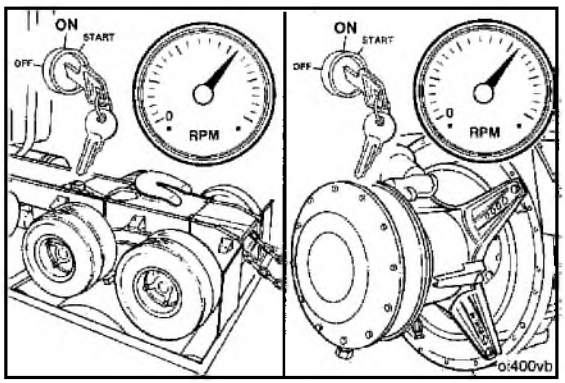

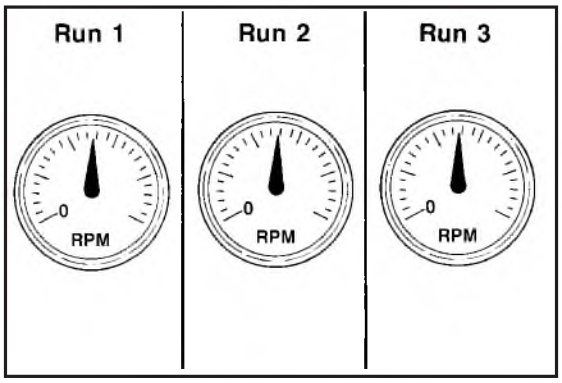


b. Perform a stall speed check, refer to Procedure 05-32.

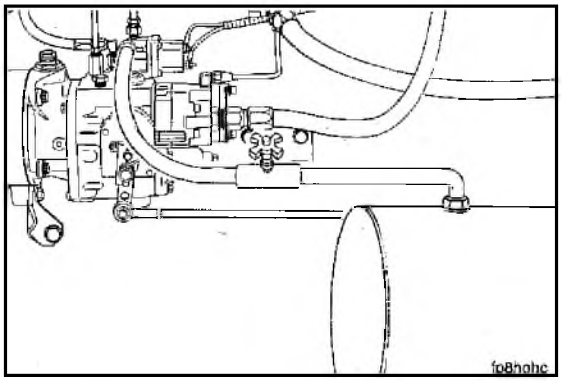

c. Install a line containing a 7 mm [1/4 inch] needle valve between the fuel pump shutoff valve and the fuel tank.

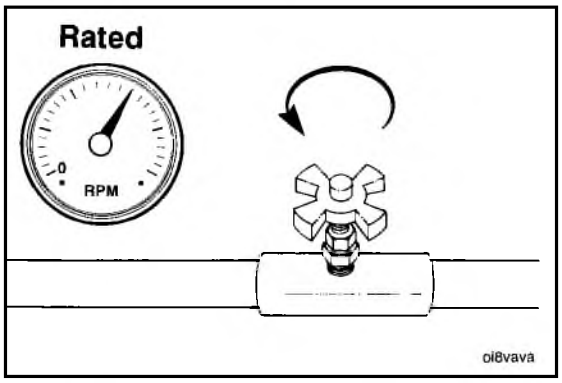


With the valve installed, operate the engine at high idle. Slowly open the needle valve until the engine RPM drops to rated rpm. This is the ''full fuel'' position.

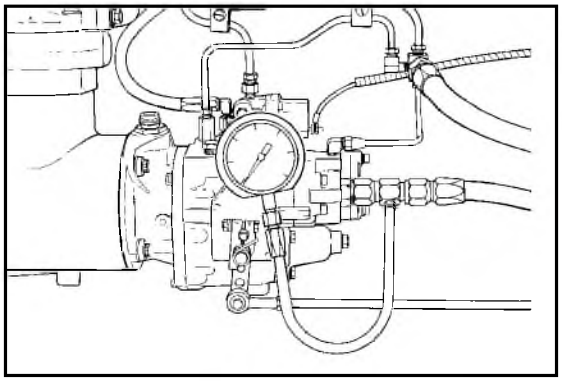

2. Remove the fuel supply hose to the gear pump or the plug from the rear of the fuel pump mounted fuel filter.
3. Install the adapter as close to the fuel pump as possible. Install a vacuum gauge, Part No. ST-434, or equivalent, to the adapter. The minimum gauge capacity must be 760 mm-hg [30 in-hg].

**NOTE:** The vacuum gauge, Part No. ST-434, contains the gauge, hose, and adapter.

4. Hold the gauge at the same level as the gear pump.

**NOTE:** The gauge will not measure the correct vacuum if it is not held at the same level as the gear pump.

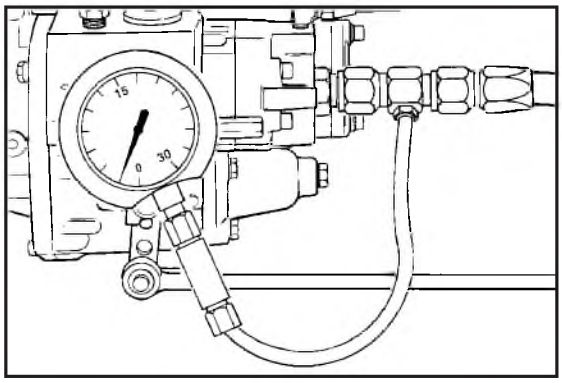

5. Operate the engine at the ''full fuel'' position.
6. Observe the reading on the gauge.

**NOTE:** The maximum fuel inlet restriction is as follows:

7. Clean fuel filter is 100 mm-Hg [4.0 in-Hg].
8. Dirty fuel filter is 200 mm-Hg [8.0 in-Hg].
9. Correct the restriction or replace the fuel filter. Refer to Procedure 05-13.

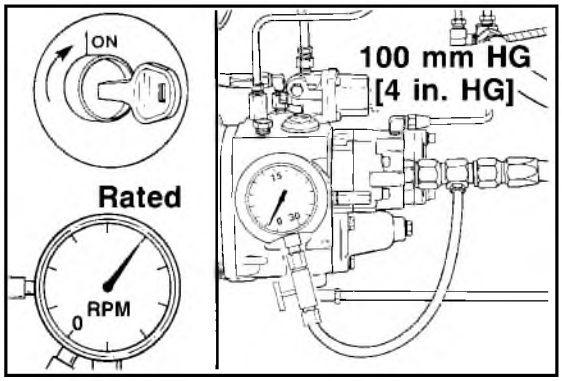


## Fuel Drain Restriction - Check (05-24)

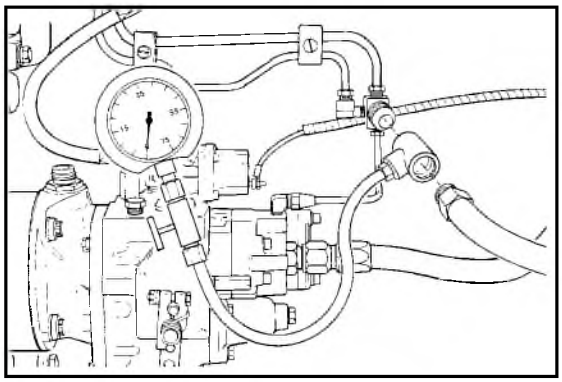

1. Remove the fuel drain line and install the pressure gauge, Part No. ST-1273, or equivalent. Minimum gauge capacity must be 200 mm-Hg [8 in-Hg].
   a. Use the hose adapter from Part No. ST-434 to connect the pressure gauge hose.
   b. Bleed the air from the gauge line.

2. Operate the engine at rated RPM and full load. This may be accomplished by using a dynamometer, the hydraulics, or a load bank if the equipment allows.

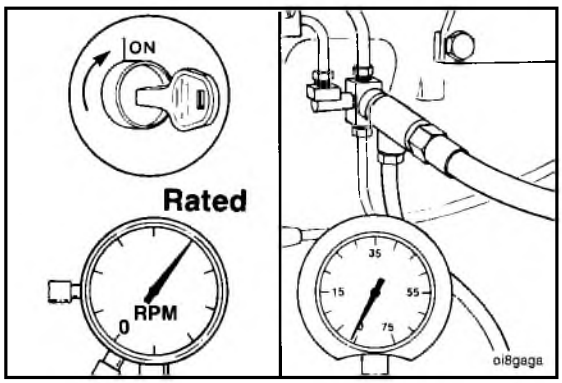

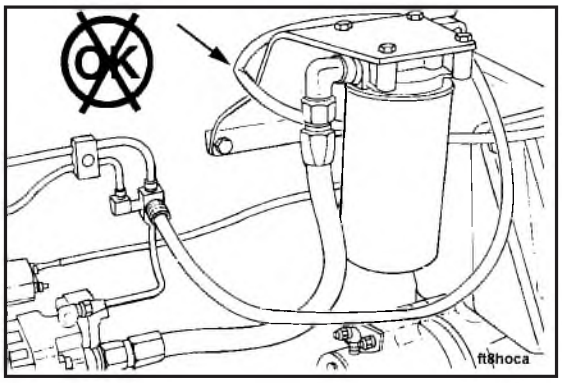


**NOTE:** Make sure the drain line does not have any loops or is not crimped.

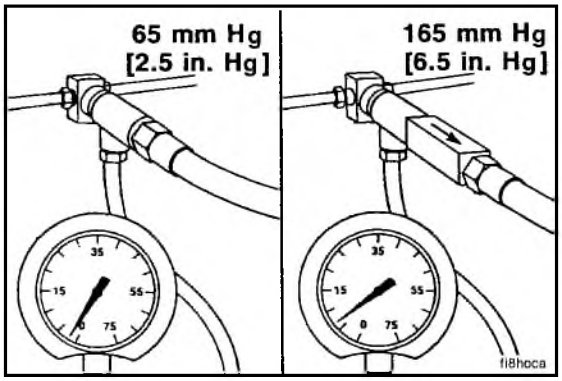


3. Observe the reading on the gauge. Hold the gauge at the same level as the connection.

**NOTE:** The maximum drain line restriction is as follows:

| Without check valves | With check valves |
|---|---|
| 65 mm-Hg<br>[2.5 in-Hg] | 165 mm-Hg<br>[6.5 in-Hg] |

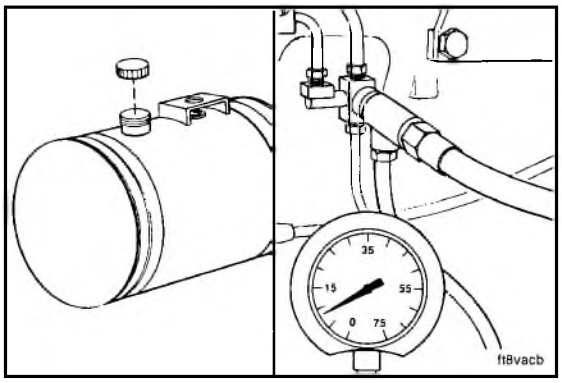


4. If the restriction is above the specifications, remove the fuel tank fill cap and check again.

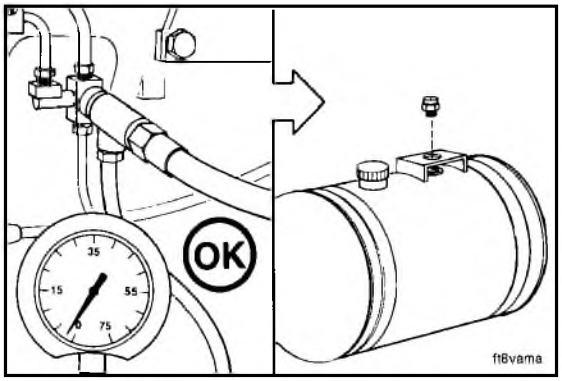


5. If the restriction is within specifications when the cap is removed, replace the tank vents.

6. If the restriction is still above specifications, check for a return stand-pipe.
   a. Remove the fuel return line from the fuel tank.
   b. Install an adapter that will allow a hand pump and manometer to be connected to the tank. The gauge must have a minimum capacity of 500 mm $H_20$ [20 in-$H_20$].

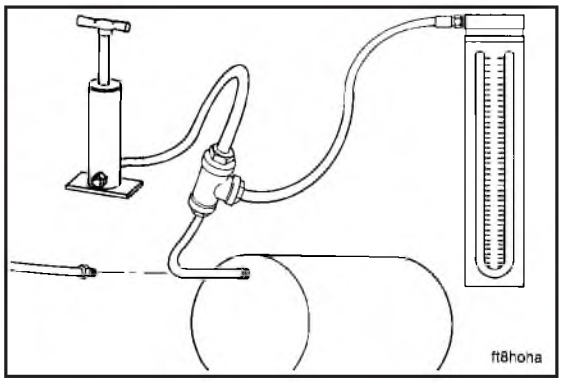


   c. Apply air pressure using the hand pump. If pressure develops and is held a stand pipe exists.
   d. Remove the stand pipe or relocate the fuel return connection to a suitable fitting in the expansion space of the fuel tank.

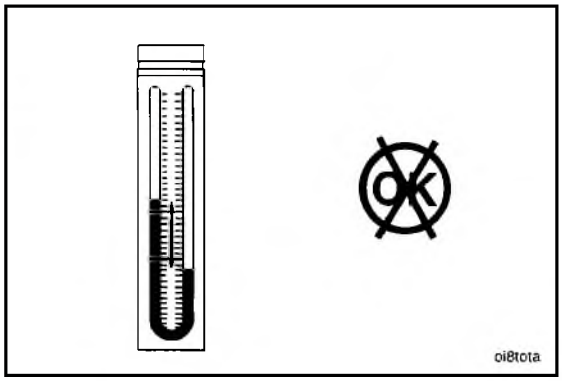


## STC Oil Control Valve - Check (05-25)

1. Install a pressure gauge in the oil manifold or in the oil supply line attached to the oil manifold. The minimum gauge capacity must be 485 kPa [70 psi].

   If the complaint is white smoke perform steps 2, 3, 4a, 4b. If the complaint is hard starting or low power perform all of the steps in the procedure.

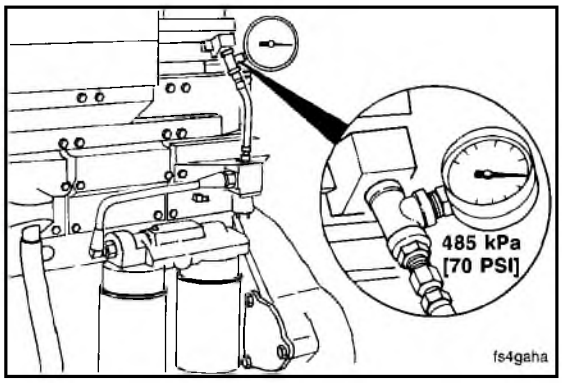


2. Operate the engine at idle.
3. Bleed the gauge line of air.

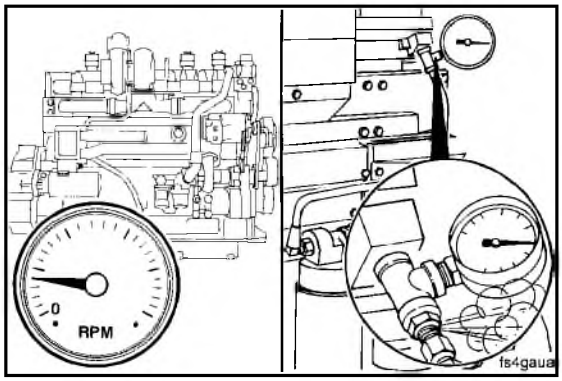

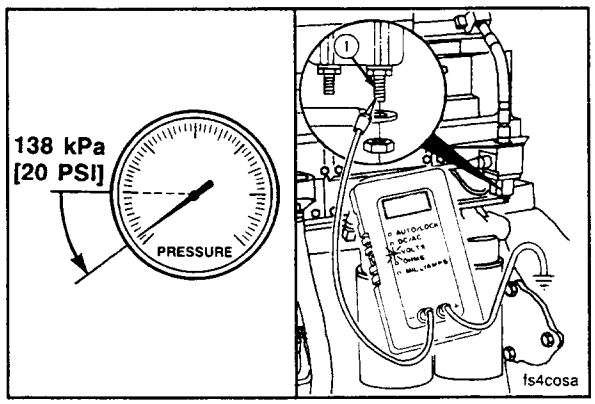


4. Check the gauge reading.

   a. If the oil pressure is less than 138 kPa [20 psi] the STC is in the normal (retarded) mode. Check for voltage at the oil control valve. If voltage is present, check for oil leaks at the oil connections in the rocker housings. If there are no oil leaks, replace the valve. Refer to Procedure 05-28.

   b. If voltage is not present at the oil control valve, check the fuel pressure switch. Refer to Procedure 05-26.

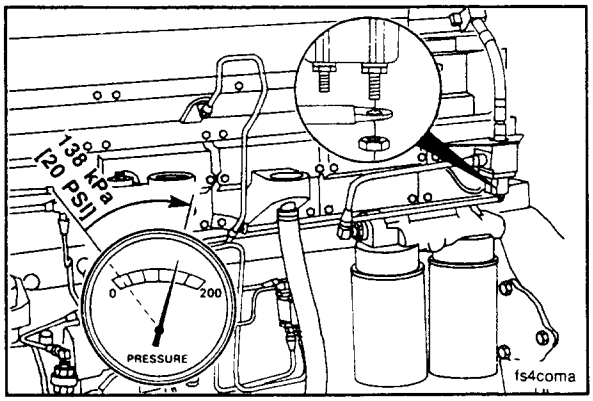


   c. If the oil pressure is more than 138 kPa [20 psi] the STC is in the advanced mode. Remove the wire from the oil control valve.

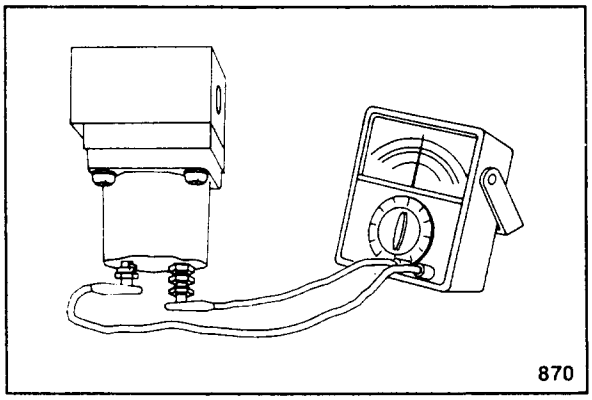


   d. If the oil pressure does not decrease, check the resistance across the two terminals of the oil control valve.

   If the resistance is not within specifications, the solenoid must be replaced. Refer to the Fuel Pump Rebuild Manual.

| Solenoid Part No. | Voltage and Type | Coil Resistance MIN (ohm) | MAX |
|---|---|---|---|
| 196066 | 24 Volt Direct Current Single Terminal | 28 | 32 |
| 209940 | 12 Volt Direct Current Single Terminal | 7 | 8 |

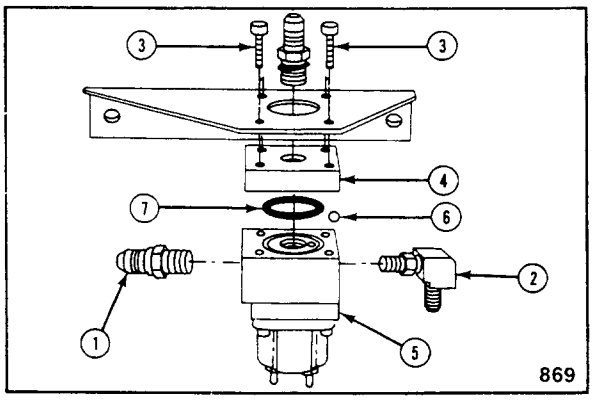


   e. If the oil pressure did not decrease and the solenoid resistance is within specifications, replace the oil control valve. Refer to Procedure 05-21.

# STC Fuel Pressure Switch - Check (05-26)

1. Turn the ignition switch ''on'', but do not start the engine.

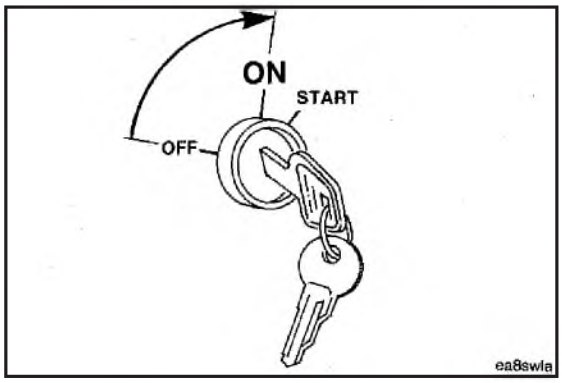


2. Check for voltage at each post on the fuel pressure switch.

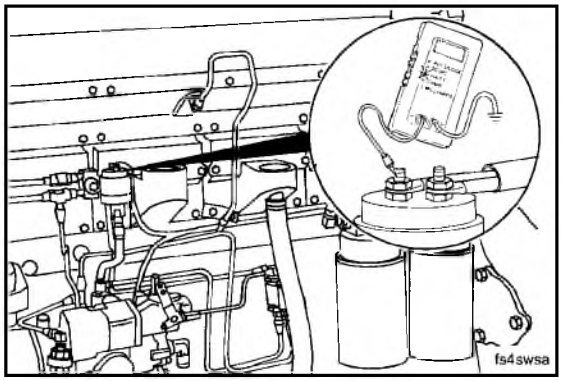


   a. If there is voltage at each post the switch is good.

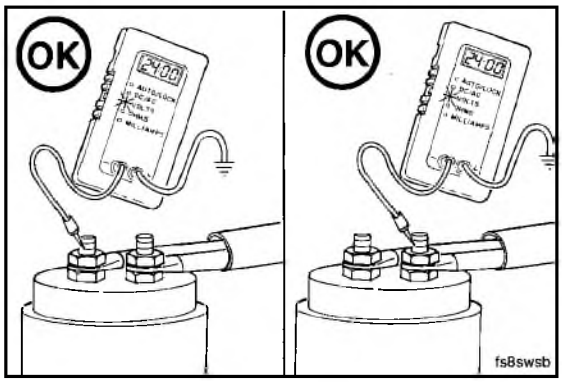


   b. If there is voltage at only one post, replace the switch.

   c. Check the wiring harness to determine if a failed wire caused the fuel pressure switch to fail. Refer to Procedure 05-27.

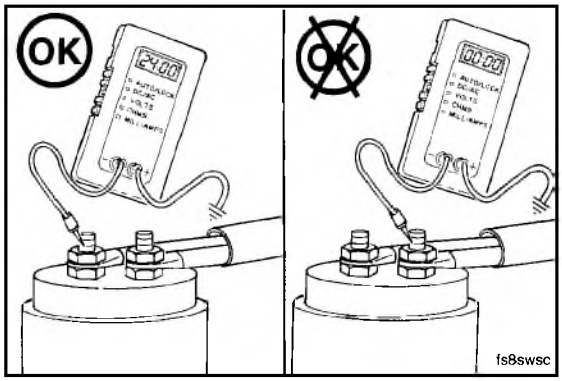

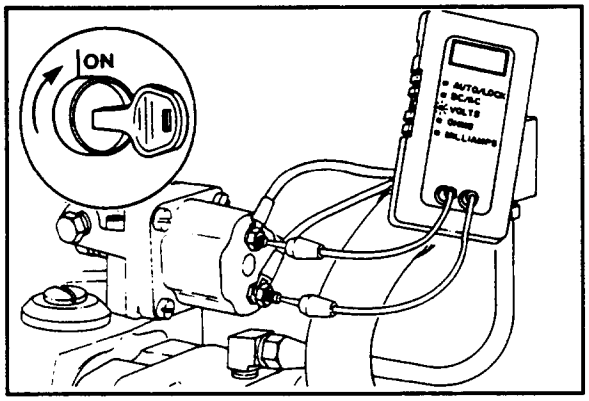


d. If there is no voltage at either terminal on the fuel pressure switch, check for voltage at the fuel pump solenoid.

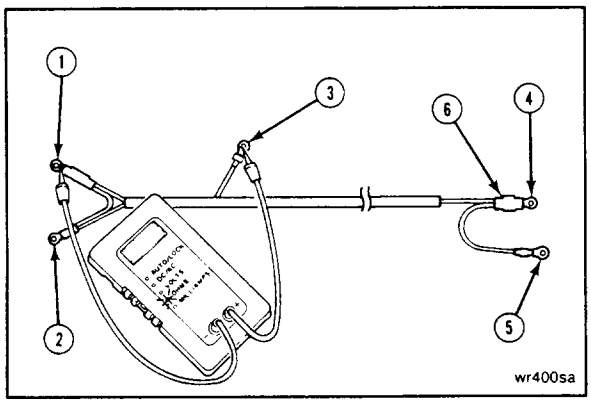


e. If there is voltage at the solenoid, replace the wiring harness. Refer to Procedure 05-27.

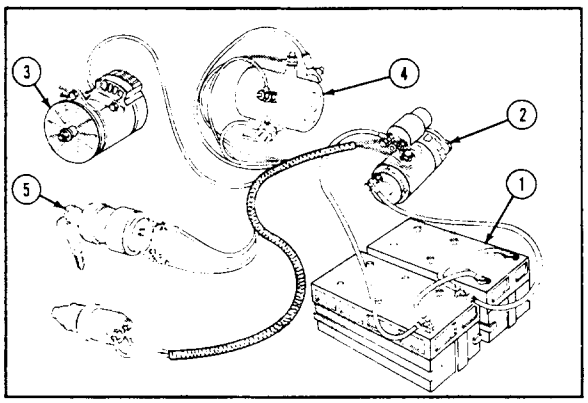


f. If there is no voltage at the fuel solenoid, check the electrical system. Refer to Procedure 06-06.

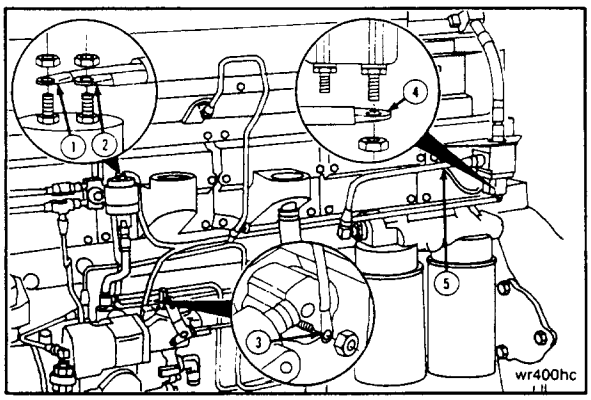


## STC Wiring Harness - Check For Reuse (05-27)

1. Disconnect the wires from the terminals as shown.
2. Use a multi-meter, Part No. 3376303, or equivalent, and set it to read ohms.
3. Connect the meter to terminals (1) and (3).Connect the meter to terminals (5) and (4). Connect the meter to terminals (2) and (4). The meter must read "ZERO" for each wire. Replace the wiring harness if a wire has a high resistance.

4. Check the diode (6). If the meter readings are different than described the diode and/or wiring harness must be replaced. Refer to Procedure 05-29.

   a. Connect the positive wire on the meter to terminal (4). Connect the negative wire on the meter to terminal (5). The meter must read a high resistance (ohms).

   b. Reverse the terminal connections. Put the positive meter wire on terminal (5). Put the negative meter wire on terminal (4). The meter must indicate a low resistance (ohms).

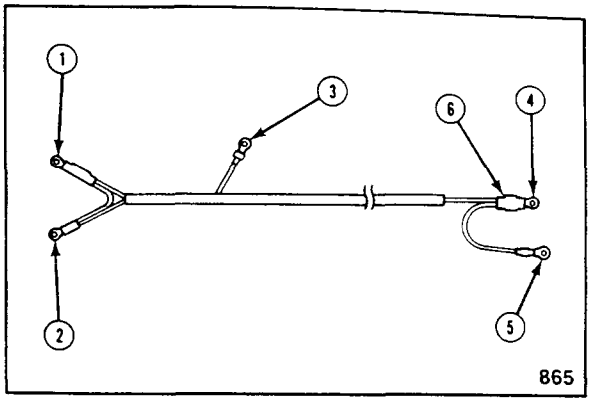


   c. Install the wiring harness to the correct terminals and tighten the nuts to 4.0 N•m [35 in-lb].

      (1) Fuel pressure switch

      (2) Fuel pressure switch

      (3) Fuel pump solenoid - positive terminal

      (4) Oil control valve - positive terminal

      (5) Oil control valve - negative terminal or ground

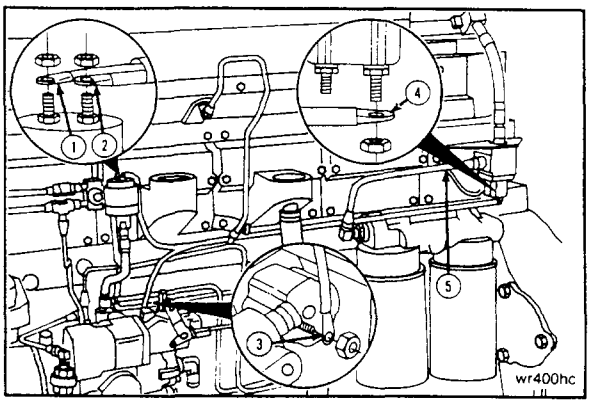


# STC Oil Control Valve - Replace (05-28)

## Remove

1. Disconnect the STC oil supply hose from the control valve. Disconnect the oil hose going to the oil manifold and the oil tube going to the cam follower cover.

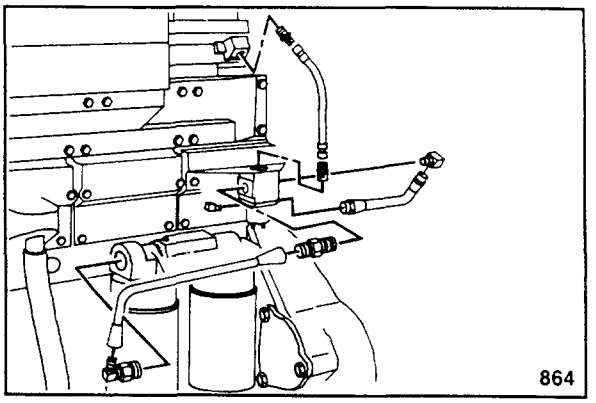


**Note:** Removing the capscrews (3) allow all of the valve pieces to separate.

2. Remove the four capscrews (3) from the bracket. Remove all of the following parts:

   (1) Oil inlet fitting
   (2) Check valve
   (3) Capscrews (4)
   (4) Cover
   (5) Valve body

   Remove the check ball (6) and the o-ring (7) from the valve body.

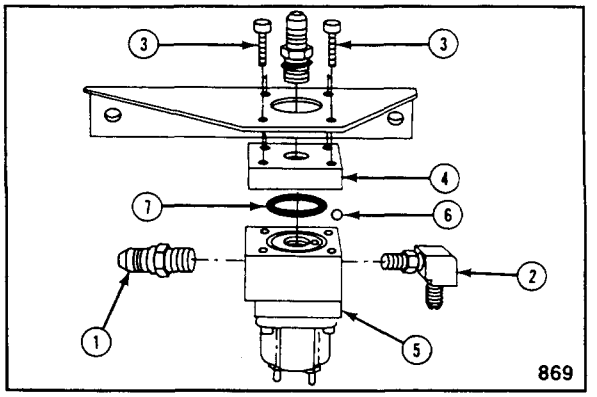

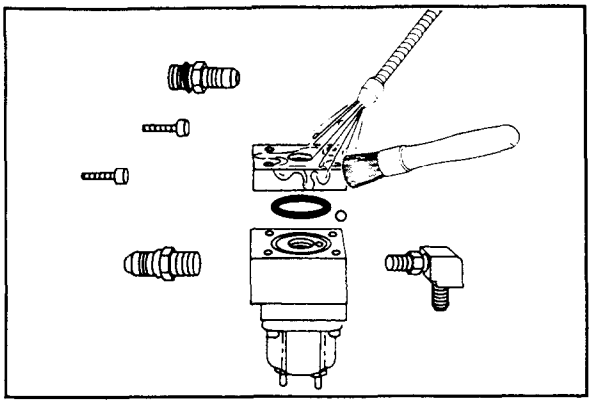

## Check for Reuse

1. Clean the parts in solvent and dry with compressed air. Visually inspect the parts for damage, replace the valve if necessary.

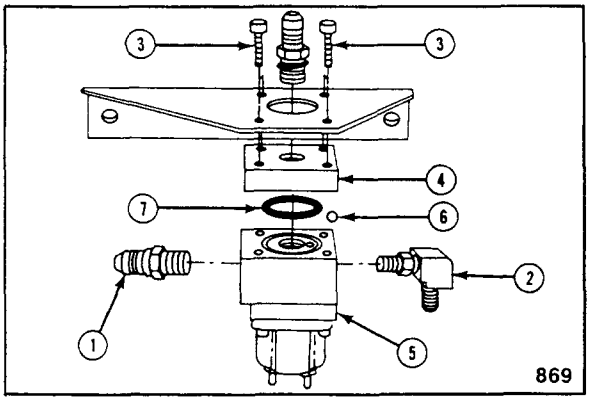


## Install

1. Lubricate the o-ring (7) with engine oil. Install the o-ring (7) and the check ball (6) in the valve body. Install the parts on the bracket.

   (5) Valve
   (4) Cover
   (3) Capscrews (4)

   Tighten the capscrews to 9 N•m [80 in-lb].

2. Install the check valve and the oil inlet fitting.

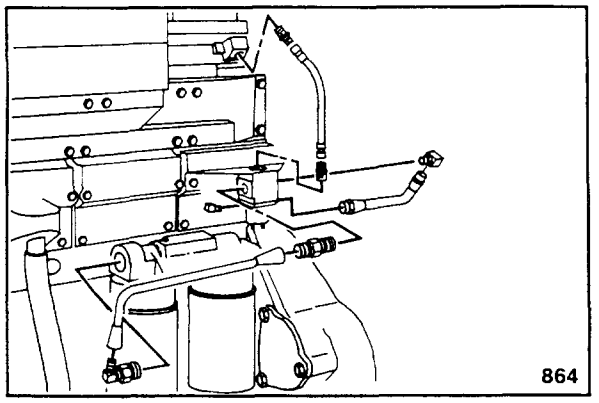


3. Connect all of the hoses and tubes to the control valve.

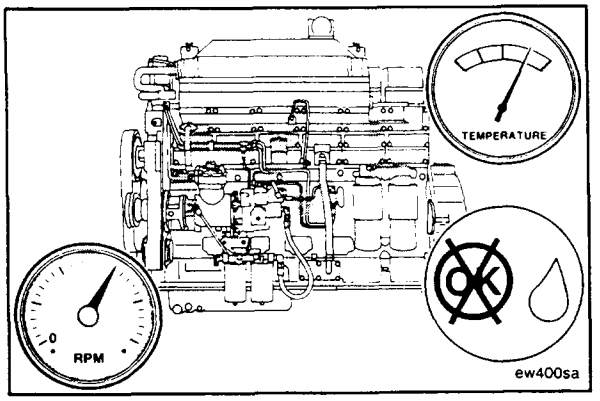


4. Operate the engine to normal operating temperature and check for leaks.

# STC Wiring Harness - Replace (05-29)

## Remove

1. Put tags on all of the STC wiring harness wires to identify mounting locations. Remove the wiring harness.

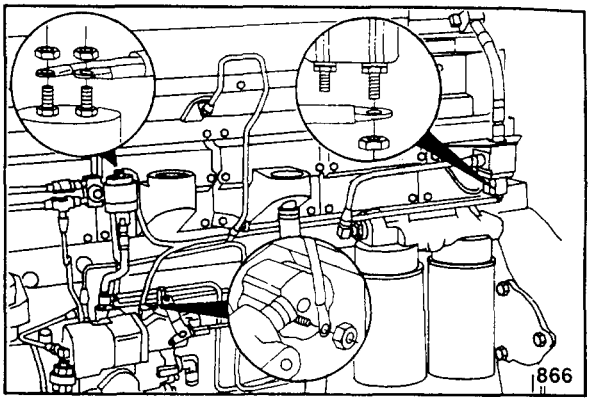


## Install

1. Identify the mounting location for each terminal of the STC wiring harness.
   (1) Fuel rail pressure switch
   (2) Fuel rail pressure switch
   (3) Fuel pump solenoid - positive terminal
   (4) Oil control switch - positive terminal
   (5) Ground

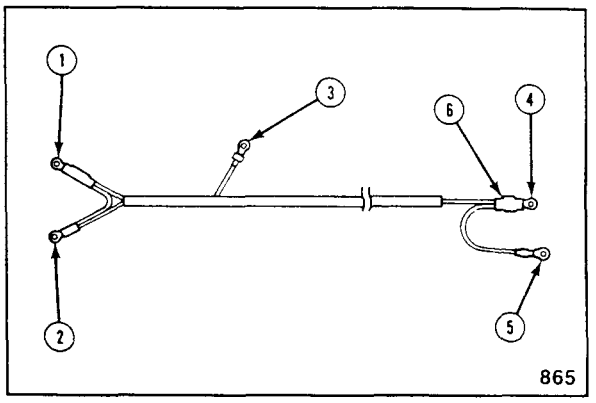


2. Install the wiring harness. Tighten the mounting nuts to 4.0 N•m [35 in-lb].

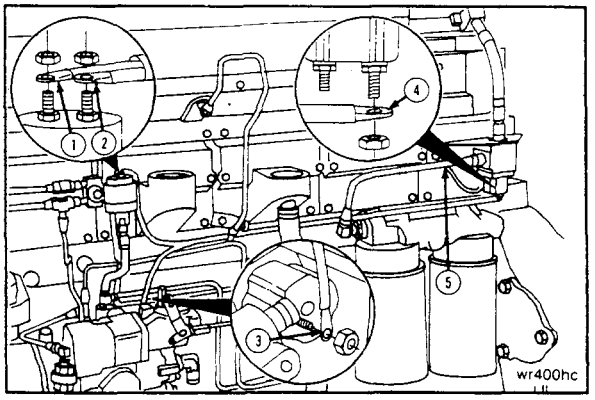


# Fuel Consumption Check (05-30)

Refer to the fuel consumption check lists sheets in the back of this section.

The most accurate method to check the fuel consumption is to weigh the fuel used.

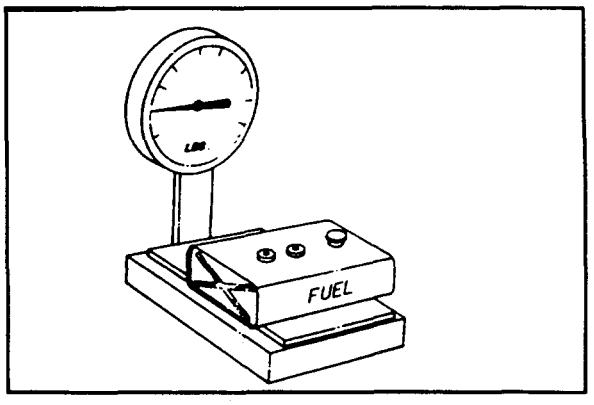

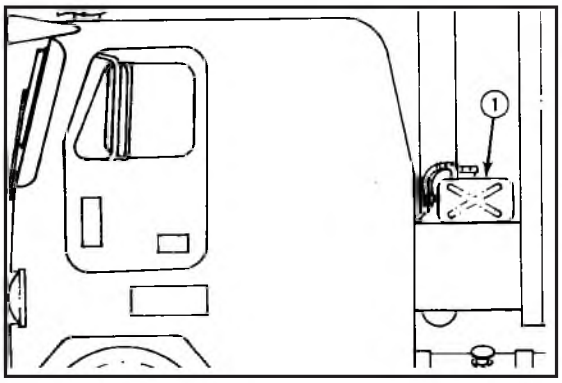


1. Install a remote fuel tank (1) with enough capacity to run 80 kilometers [50 miles] or 1 hour.
2. Fill the fuel tank. Weigh the tank with the fuel. The weight of No. 2 diesel fuel is nominally 0.844 kg per liter [7.03 pounds per gallon].

**NOTE:** Use a scale capable of measuring within 0.045 kg [0.1 lb] to weigh the fuel tank.

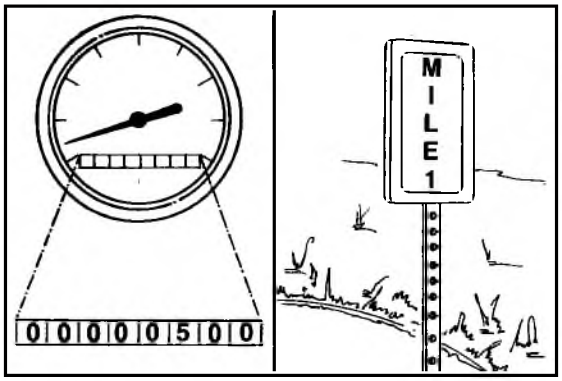


### On-Highway

Measure the distance traveled with an accurate odometer. The odometer accuracy can be checked by using measured miles, or kilometers.

### Off-Highway

Measure the time with a stopwatch.

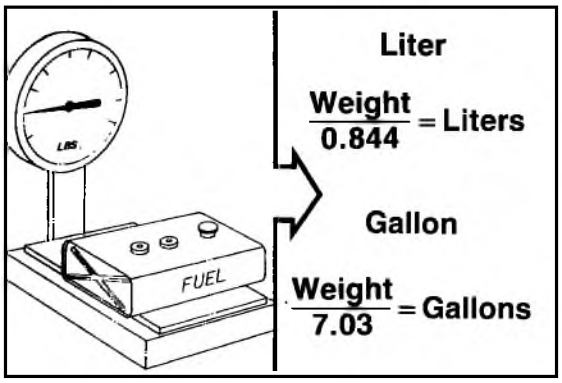


### On-Highway

After traveling the route, weigh the fuel remaining and compute the fuel used in liters [gallons] as required.

### Off-Highway

After one hour of operation, weigh the fuel remaining, and compute the fuel used in liters [gallons] as required.

$$\frac{\text{Miles}}{\text{Gallons}} = \text{MPG}$$

$$\frac{\text{Kilometers}}{\text{Liters}} = \text{KPL}$$

### On-Highway

Compute the kilometers per liter or miles per gallon.

### Off-Highway

Compute the liters per hour or gallons per hour.

In addition to the measurement of the fuel used, the following factors provide points for running the recognized Type II Society of Automotive Engineers Test.

**NOTE:** Although the SAE test applies to highway applications, the principles described should be used in off-highway applications also.

**Type II**
**Fuel Test**
**SAE**
**RCCC**
**ATA**

1. Perform the test with the test vehicle and a control vehicle. The control vehicle compensates for changes in traffic conditions.
2. The vehicles must stay close together to experience the same varying traffic and weather conditions but not so close as to affect each other.

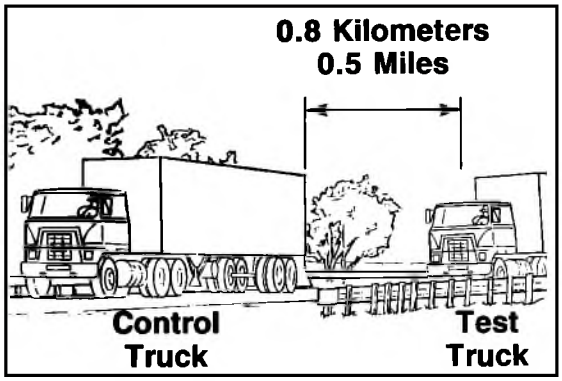


3. The test course must be 65 to 80 kilometers [40 to 50 miles] long.

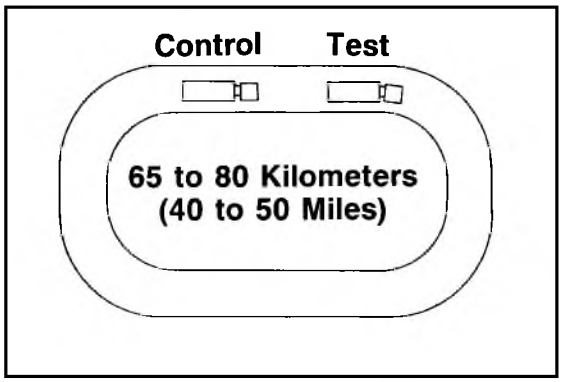


4. The test route and truck weights must not change during the test.

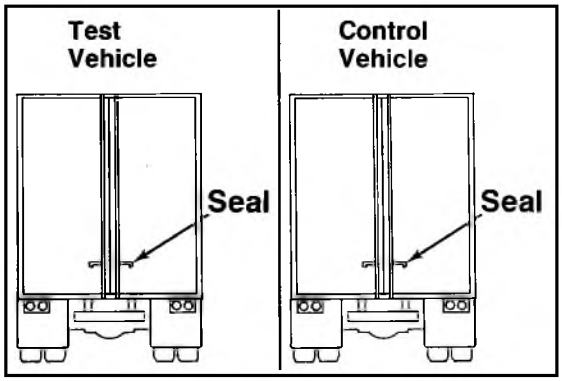

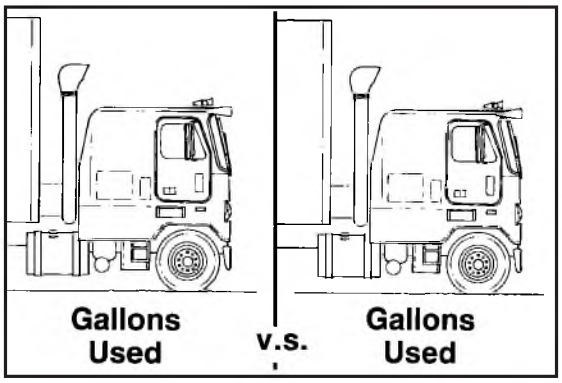


5. All of the test results are based on comparing the fuel used by the test truck to the fuel used by the control truck.

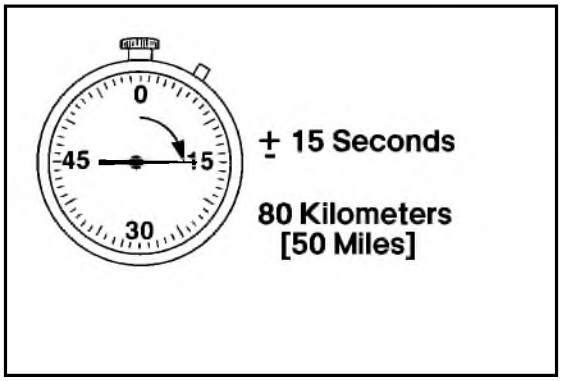


6. Drive the truck on a ''warm up'' test run. Drive enough tests to achieve:
   a. Difference in elapsed time between each test run can only be plus or minus 0.5 percent. This would be ± 15 seconds on 80 kilometers [50 miles].

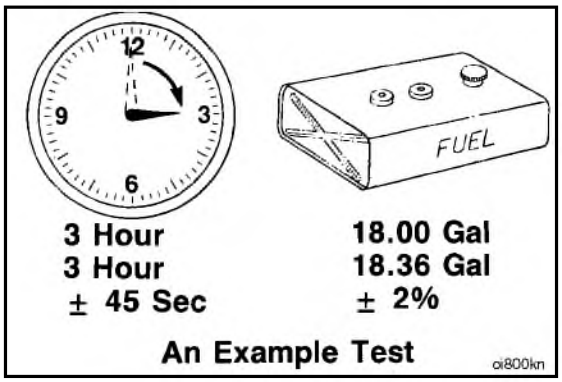


   b. The fuel usage of the test truck between test drives must fall within a 2 percent range, (6 mpg vs 6.12 mpg).
   c. The same range also applies between drives of the control truck.

**NOTE:** The differences in traffic and driving practices can make the test drive fall out of the 2 percent range.

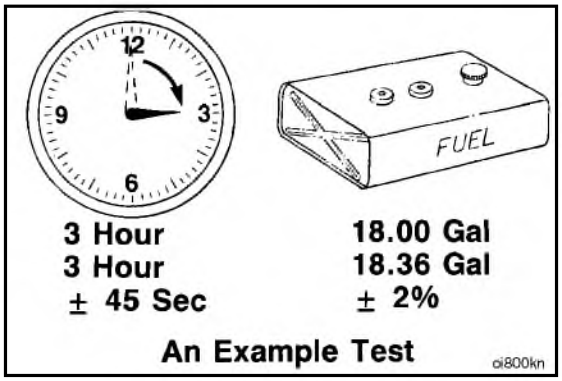


   d. A minimum of three test drives that meet these conditions makes a valid test. A single test drive is unreliable.

e. Use the same, experienced drivers for all of the tests.

The vehicle speeds should be representative of a typical operation.

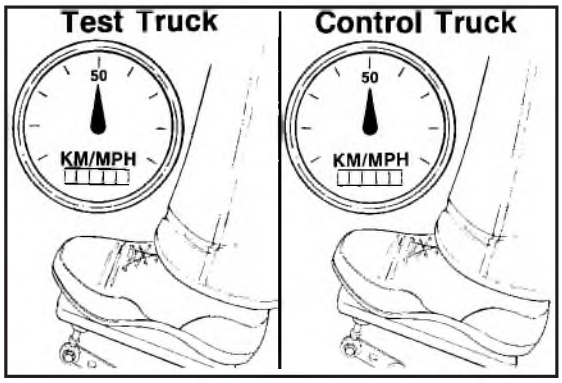


f. During the test, record the following:

g. Ambient temperature

h. Humidity

i. Barometric pressure

j. Wind velocity

k. Wind direction

**NOTE:** Avoid testing under any extreme conditions.

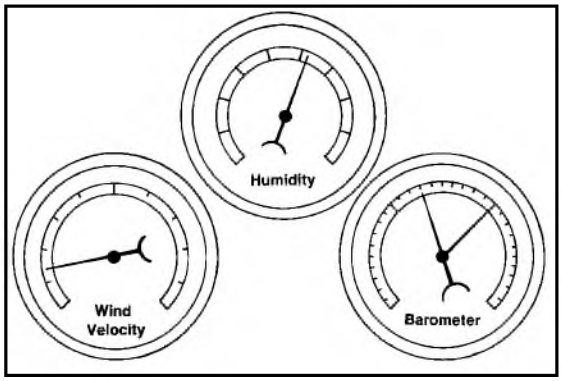


a. An alternate method of measuring fuel used is as follows:

b. Drain the fuel tank.

c. Add a measured amount of fuel to the tank.

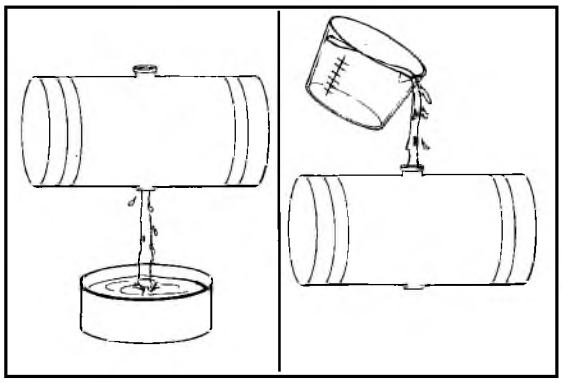

d. After the test, drain the tank into a calibrated container and subtract from the amount added in step b.

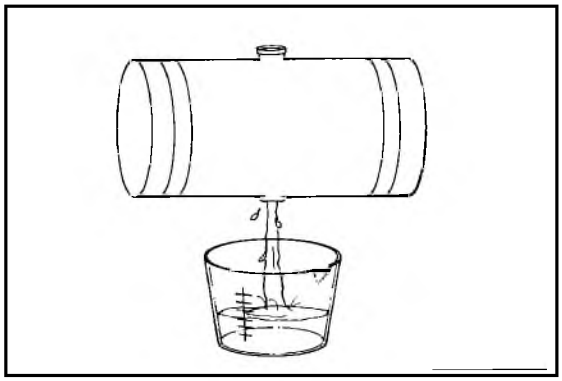

# Low Power Check (05-31)

A complaint of Low Power is not sufficient to correct a problem unless a necessary and time-consuming investigation is made.

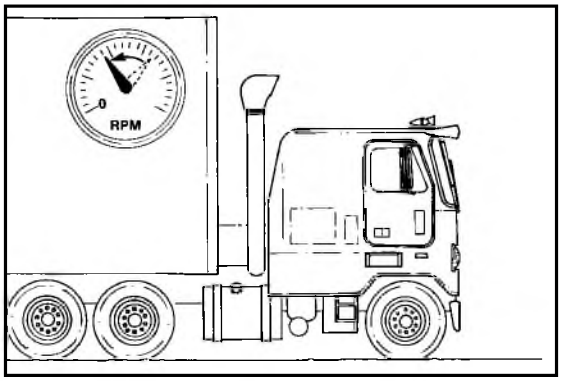


Ask the Operator:

1. Low power on level road?

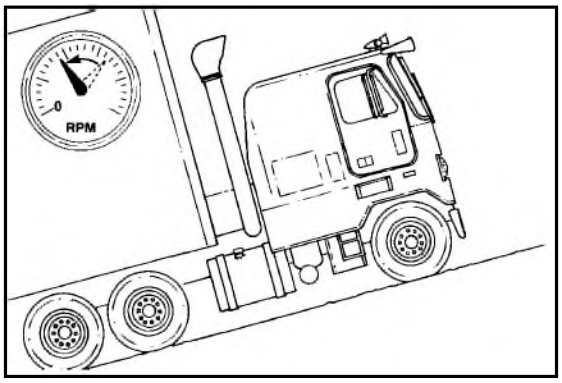


2. Low power uphill?

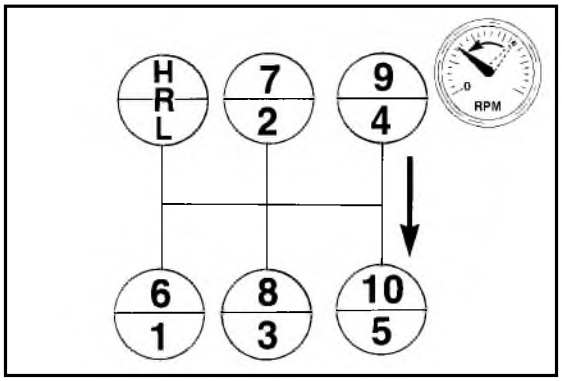


3. Low power after a shift?

4. Low power or hesitation at bottom of hill after coasting?

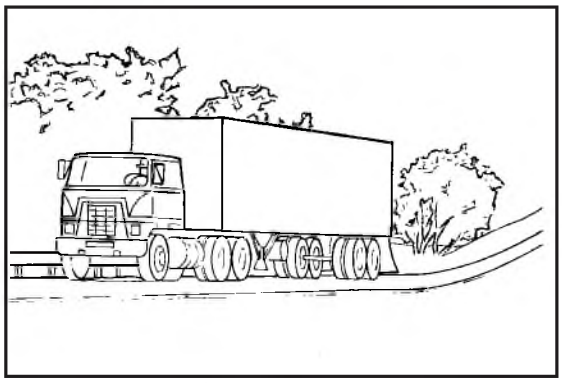

5. Are you sure the fuel system is at fault or something else?

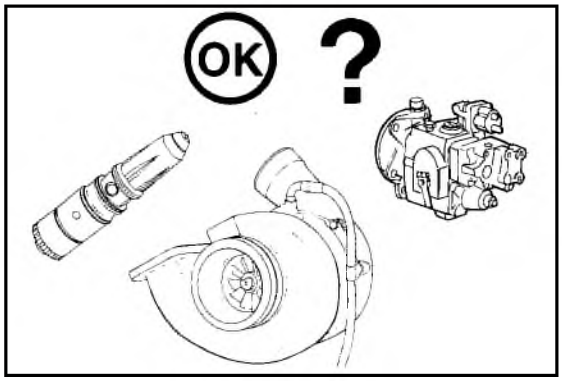


6. Before any disassembly, refer to the Low Power Troubleshooting Chart and the Driveability Low Power Check List at the end of this section.

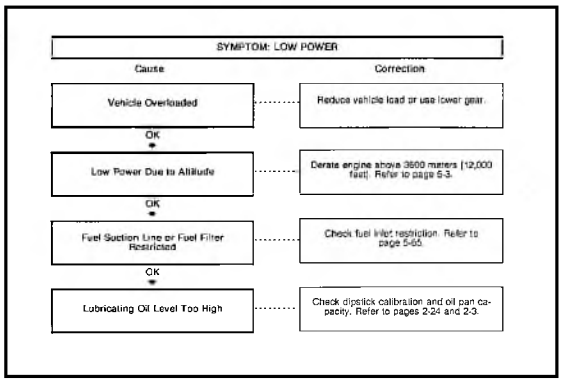

| SYMPTOM: LOW POWER | |
|---|---|
| **Cause** | **Correction** |
| Vehicle Overloaded | Reduce vehicle load or use lower gear. |
| OK | |
| Low Power Due to Altitude | Derate engine above 3600 meters (12,000 feet). Refer to page 5-3. |
| OK | |
| Fuel Suction Line or Fuel Filter Restricted | Check fuel inlet restriction. Refer to page 5-65. |
| OK | |
| Lubricating Oil Level Too High | Check dipstick calibration and oil pan capacity. Refer to pages 2-24 and 2-3. |

7. The checks will confirm the complaint and determine whether it is the fuel system or something else.
8. Refer to Procedure 05-06 to measure engine performance.

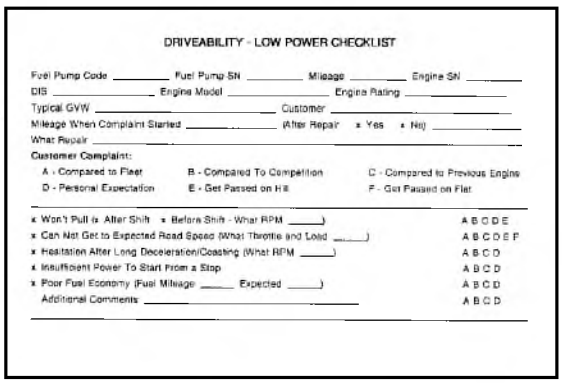

DRIVEABILITY - LOW POWER CHECKLIST

Fuel Pump Code _____ Fuel Pump SN _____ Mileage _____ Engine SN _____
DIS _____ Engine Model _____ Engine Rating _____
Typical GVW _____ Customer _____
Mileage When Complaint Started _____ (After Repair x Yes x No) _____
What Repair _____

**Customer Complaint:**

| | | |
|---|---|---|
| A - Compared to Fleet | B - Compared To Competition | C - Compared to Previous Engine |
| D - Personal Expectation | E - Get Passed on Hill | F - Get Passed on Flat |

| | |
|---|---|
| x Won't Pull (x After Shift x Before Shift - What RPM _____) | A B C D E |
| x Can Not Get to Expected Road Speed (What Throttle and Load _____) | A B C D E F |
| x Hesitation After Long Deceleration/Coasting (What RPM _____) | A B C D |
| x Insufficient Power To Start From a Stop | A B C D |
| x Poor Fuel Economy (Fuel Mileage _____ Expected _____) | A B C D |
| Additional Comments: _____ | A B C D |

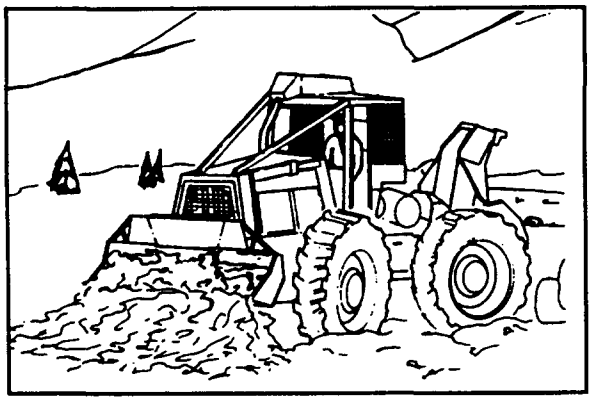

# Engine Stall Speed And Time Check (05-32)

## Converter Transmissions Stall Speed Check

1. The stall speed is the engine speed (RPM) obtained at full throttle when the converter output shaft is locked.
   a. The vehicle brakes may not hold an electronically controlled transmission.

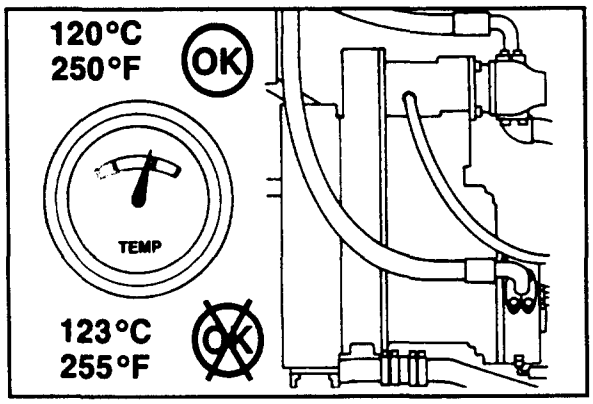


**Caution: Do not exceed 120°C [250°F] converter oil temperature. If the oil temperature exceeds 120°C [250°F], put the transmission in neutral and operate the engine until the oil temperature is below 120°C [250°F]. Check the converter oil level.**

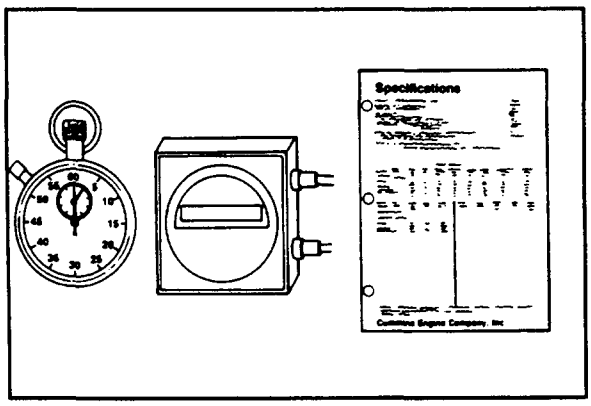


2. The following equipment is needed for this check:
   - Stop watch
   - Digital tachometer, Part No. 3375631, or a hand held optical tachometer, Part No. ST-3377462.
   - Equipment manufacturer's stall speed and time to stall specifications.

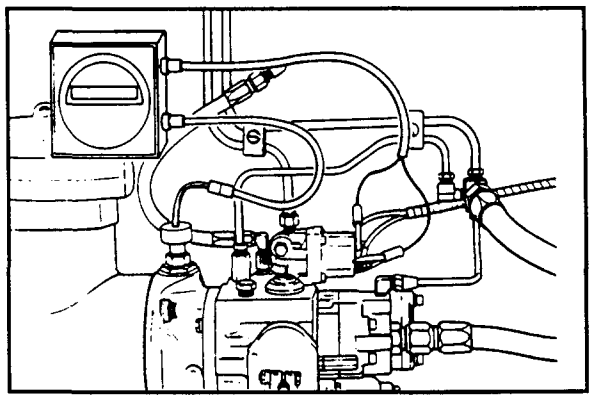

3. Install the tachometer on the fuel pump.

4. Place the gear selector in the highest gear or full forward.

   In some types of equipment it is also necessary to engage the hydraulics.

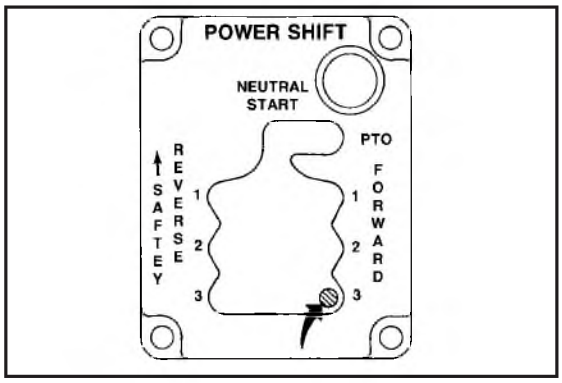


5. Make sure the vehicle has good brakes and air pressure in the brake system.
   a. The brakes must prevent the vehicle from moving when the engine is at full throttle.
   b. Engage the vehicle brakes or keep the vehicle from moving.

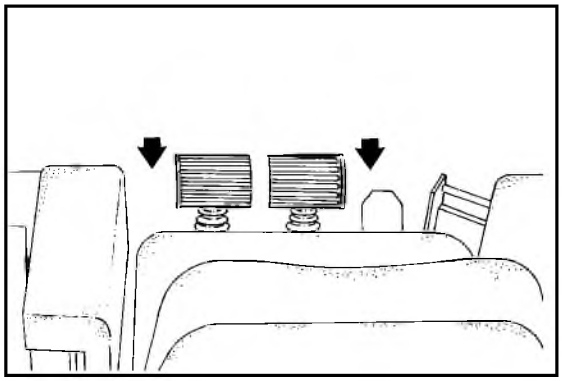

6. Operate the engine until the coolant temperature is up to 70°C [160°F] and the converter temperature is 80°C [180°F] or above.
7. Alternately shift from neutral to the highest speed gear possible and operate at part throttle. This will warm the entire system uniformly.

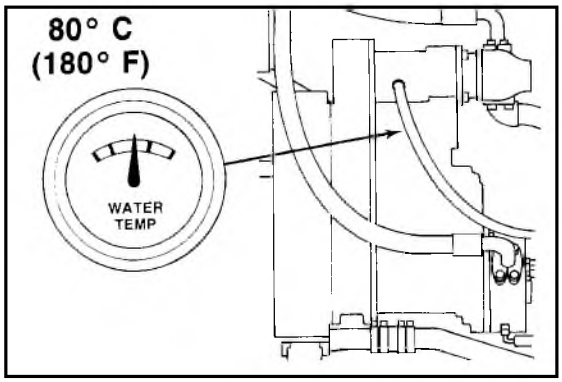


8. Bring the engine speed back to low idle.

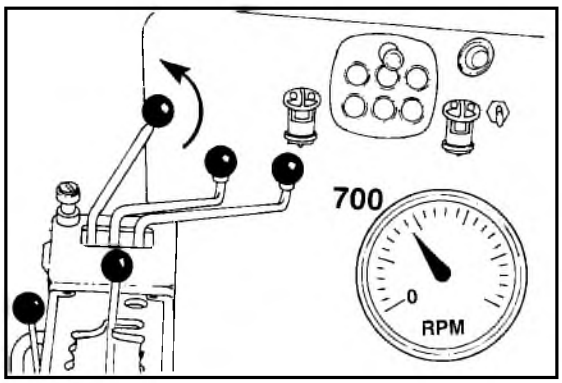

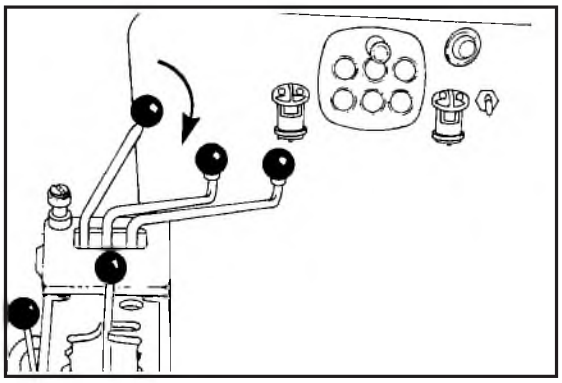

**NOTE:** Do not exceed 120°C [250°F] converter oil temperature.

9. Quickly move the throttle to the full open position. Do not perform this test for more than 15 seconds. If the engine speed continues to slowly increase, the torque convertor fluid is being overheated.

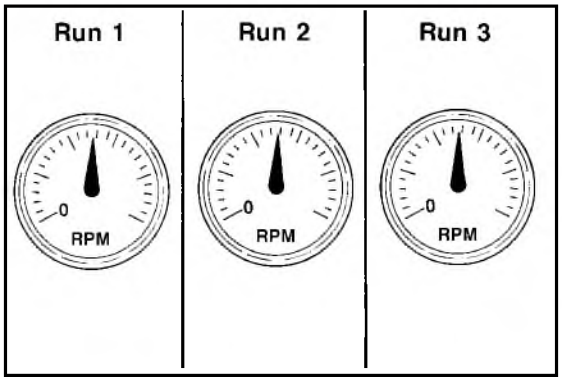


10. Check the engine speed (RPM) at the point of stall.
11. Always hold the speed until it is stable.
12. Take several readings. Make sure the reading is accurate.

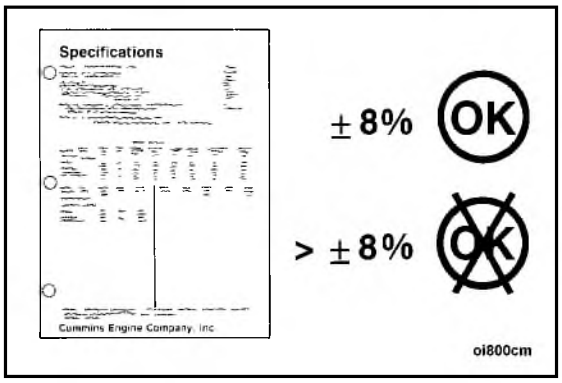


13. Check the stall speed (RPM) against the specifications that are for the equipment, converter, or automatic transmission.

**NOTE:** The stall speed for the engine and converter/transmission can vary ±8% from the manufacturer's specifications.

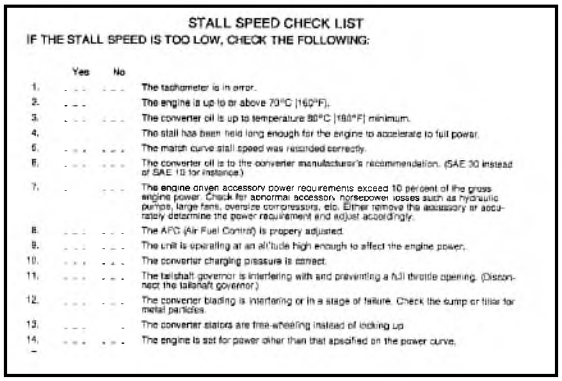

STALL SPEED CHECK LIST

IF THE STALL SPEED IS TOO LOW, CHECK THE FOLLOWING:

| | Yes | No | |
|---|---|---|---|
| 1. | . . . | . . . | The tachometer is in error. |
| 2. | . . . | | The engine is up to or above 70°C [160°F]. |
| 3. | . . . | . . . | The converter oil is up to temperature 80°C [180°F] minimum. |
| 4. | | | The stall has been held long enough for the engine to accelerate to full power. |
| 5. | . . . | . . . | The match curve stall speed was recorded correctly. |
| 6. | . . . | . . . | The converter oil is to the converter manufacturer's recommendation. (SAE 30 instead of SAE 10 for instance.) |
| 7. | . . . | . . . | The engine driven accessory power requirements exceed 10 percent of the gross engine power. Check for abnormal accessory horsepower losses such as hydraulic pumps, large fans, oversize compressors, etc. Either remove the accessory or accurately determine the power requirement and adjust accordingly. |
| 8. | . . . | . . . | The APC (Air Fuel Control) is propery adjusted. |
| 9. | . . . | . . . | The unit is operating at an altitude high enough to affect the engine power. |
| 10. | . . . | . . . | The converter charging pressure is correct. |
| 11. | . . . | . . . | The tailshaft governor is interfering with and preventing a full throttle opening. (Disconnect the tailshaft governor.) |
| 12. | . . . | . . . | The converter blading is interfering or in a stage of failure. Check the sump or filter for metal particles. |
| 13. | . . . | . | The converter stators are free-wheeling instead of locking up. |
| 14. | . . . | . . . | The engine is set for power other than that specified on the power curve. |

14. If the stall speed is not within the specifications, refer to the Stall Speed Check List at the end of this section.
15. Check the equipment manufacturer's troubleshooting procedures for other reasons for stall speed problems.

16. If the cause for the stall speed being too low is low engine power output, refer to the ''Engine Power Output Low'' Troubleshooting Chart. Make the correct repair based on the fuel rate, fuel pressure, and intake manifold pressure readings.

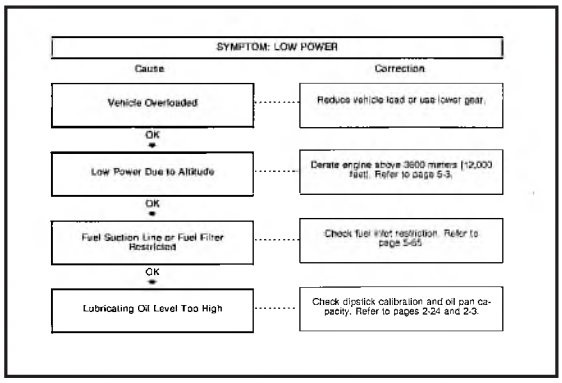


## Time To Stall Or Acceleration Time Check

1. Perform steps 1 through 9 under ''Stall Speed Check''.
2. Calculate the engine stall speed.

   Example: Stall speed 2089, (2089 x .90 = 1880 RPM).

Stall Speed X 90%
=Stall Speed Reference Point

Example:
2089RPM X .90 = 1880RPM

3. Quickly move the throttle to the full open position and start the stop watch at the same time.

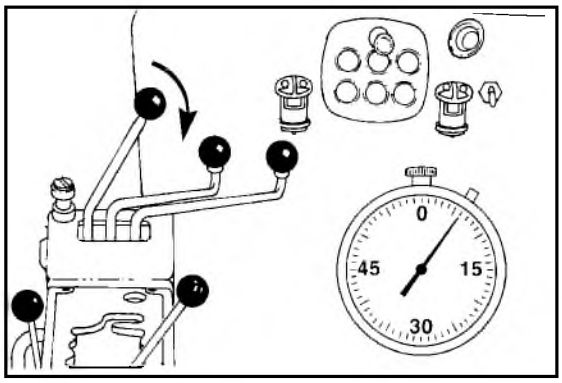


4. When the engine speed is 90% of the stall speed RPM, stop the stop watch.

   Note: The type of unit and the stall speed RPM will be different for different types of equipment. Most types have a stall speed between 8 and 12 seconds.

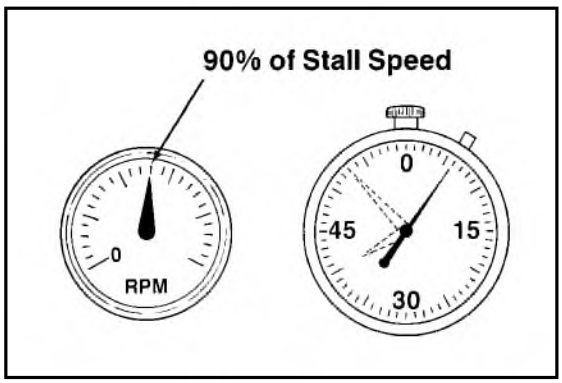

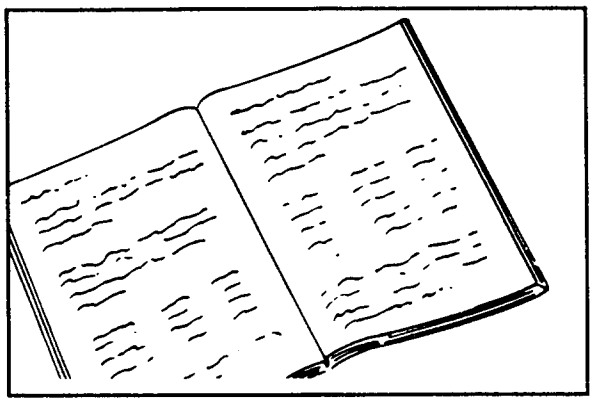

5. Check the equipment manufacturer's specifications for the time to stall or the acceleration time.
6. If the time is excessive, check the fuel pump AFC for an air leak. Refer to Procedure 05-20.

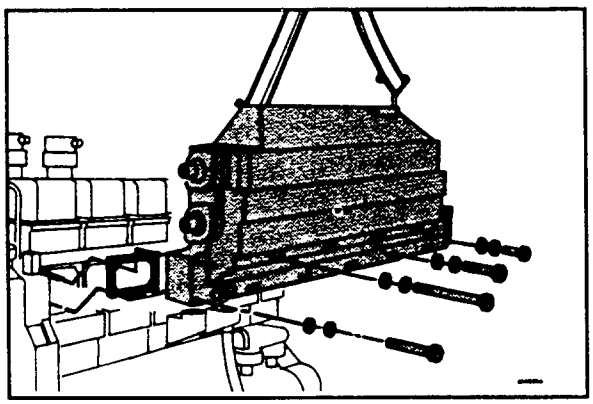

# Fuel Manifold - Replace (05-33)

## Remove

1. Remove the Aftercooler or Intake Manifold. Refer to Procedure 03-17.

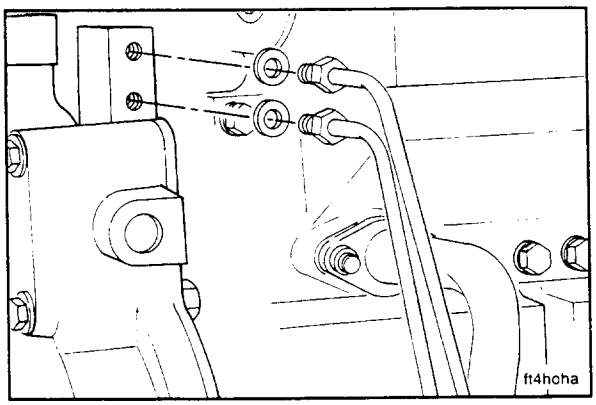


2. Disconnect the fuel lines at the fuel block.

**Note:** It may be necessary to remove the tube clamp at the camfollower cover to enable the tubes to be pulled out of the fuel block.

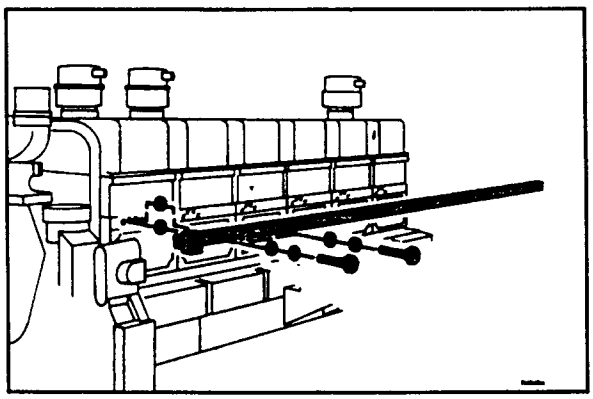

3. Remove the fuel manifold. Discard the 12 0-rings.

## Install

**NOTE:** The fuel junction box on older engines can be toward the rear of the engine.

1. Lubricate the o-rings with vegetable oil.
2. Install the o-rings on the fuel manifold. Install the manifold, washers, and the capscrews. Begin at the center of the manifold and work toward the outer edges. Tighten the capscrews to 9.5 N•m [85 in-lb].

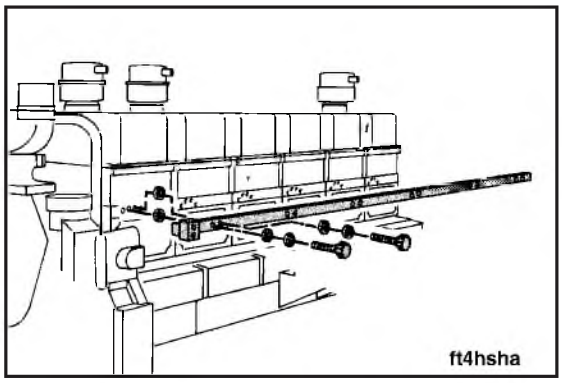


**Caution: The tube seals must be installed on the tubes before the tubes are inserted into the junction block.**

**NOTE:** The fuel pressure tube is the upper tube. The fuel drain tube is the lower tube.

3. Install the tube nut and the seals on the fuel tubes.
4. Connect, but do not tighten, the fuel tubes to those already installed.
5. Insert the fuel tubes into the junction block.

**Caution: Do not overtighten the tube nuts at the junction block.**

6. Use your fingers. Tighten the tube nuts in the junction block. Turn the nuts an additional three-fourths of a turn to one turn beyond finger tight.
7. Tighten the tubing nuts at their connection with the other tubes. Install the capscrew for the clamp and tighten to 45 N•m [35 ft-lb.]

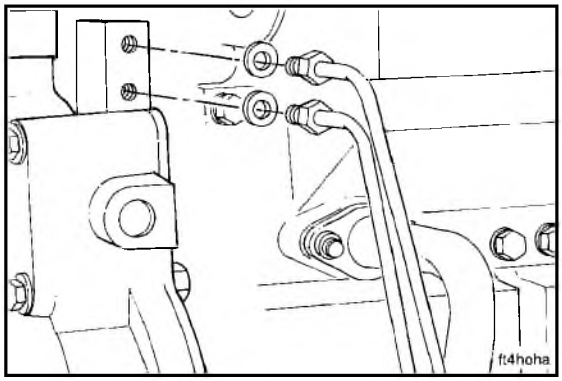


8. Install the aftercooler or intake manifold and remaining parts. Refer to Procedure 03-17.

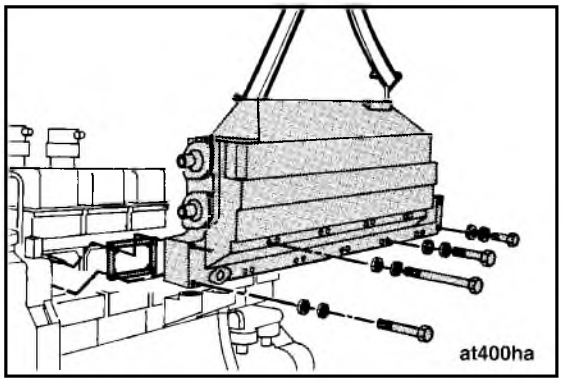

# STC Oil Manifold - Replace (05-34)

## Remove

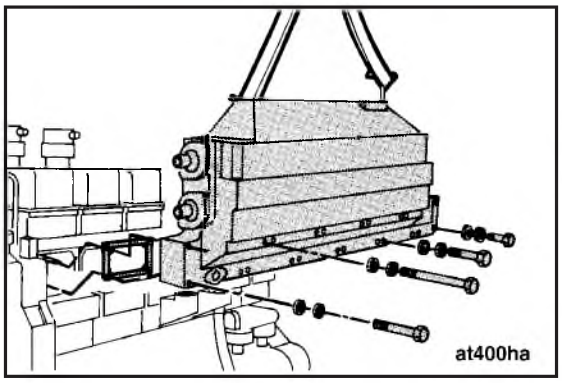


1. Remove the Aftercooler or Intake Manifold. Refer to Procedure 03-17.

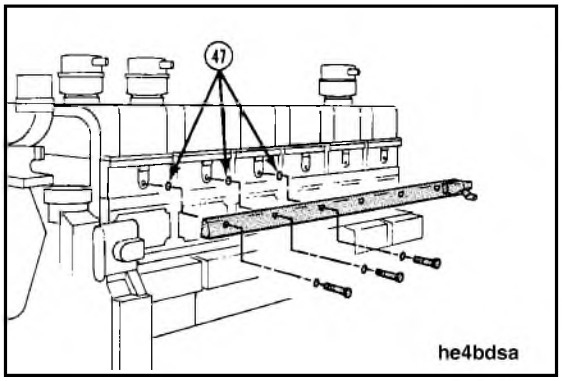


2. Remove the HVT oil manifold assembly. Discard the six o-rings.

## Install

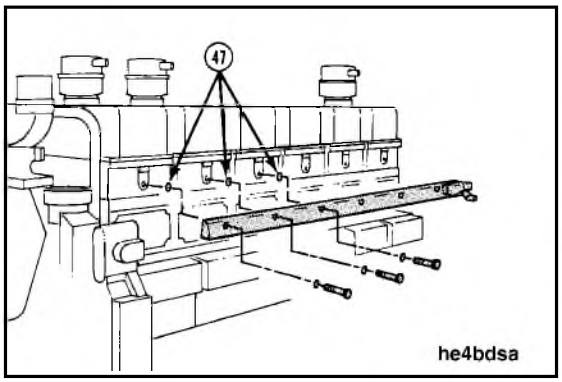


1. Lubricate the o-rings with vegetable oil.
2. Install the HVT manifold, washers, and the capscrews.
3. Begin at the center of the manifold and work toward the outer edges. Tighten the capscrews to 9.5 N•m [85 in-lbs.].

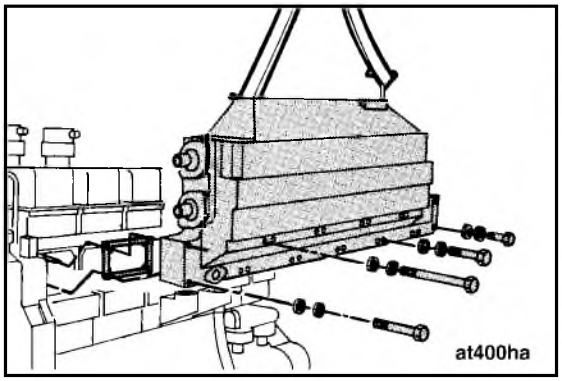


4. Install the aftercooler or intake manifold and remaining parts. Refer to Procedure 03-17.

# Stall Speed Check List (05-35)

## If The Stall Speed Is Too Low, Check The Following:

| | Yes | No | |
|---|---|---|---|
| 1. | ____ | ____ | The tachometer is in error. |
| 2. | ____ | ____ | The engine is up to or above 70°C [160°F]. |
| 3. | ____ | ____ | The converter oil is up to temperature 80°C [180°F] minimum. |
| 4. | ____ | ____ | The stall has been held long enough for the engine to accelerate to full power. |
| 5. | ____ | ____ | The match curve stall speed was recorded correctly. |
| 6. | ____ | ____ | The converter oil is to the converter manufacturer's recommendation. (SAE 30 instead of SAE 10 for instance.) |
| 7. | ____ | ____ | The engine driven accessory power requirements exceed 10 percent of the gross engine power. Check for abnormal accessory horsepower losses such as hydraulic pumps, large fans, oversize compressors, etc. Either remove the accessory or accurately determine the power requirement and adjust accordingly. |
| 8. | ____ | ____ | The AFC (Air Fuel Control) is properly adjusted. |
| 9. | ____ | ____ | The unit is operating at an altitude high enough to affect the engine power. |
| 10. | ____ | ____ | The converter charging pressure is correct. |
| 11. | ____ | ____ | The tail shaft governor is interfering with and preventing a full throttle opening. (Disconnect the tail shaft governor.) |
| 12. | ____ | ____ | The converter blading is interfering or in a stage of failure. Check the sump or filter for metal particles. |
| 13. | ____ | ____ | The converter stators are free-wheeling instead of locking up. |
| 14. | ____ | ____ | The engine is set for power other than that specified on the power curve. |
| 15. | ____ | ____ | The converter is wrong, due to improper build or rebuild of unit. |
| 16. | ____ | ____ | The converter is performing to the published absorption curve. |
| 17. | ____ | ____ | The engine and converter match is correct. Check the engine and converter models for the proper match. |
| 18. | ____ | ____ | The engine is matched to too large a converter. (If this condition is believed to exist, please report the engine-converter-accessory information to the Factory.) |
| 19. | ____ | ____ | The engine power is down. (The engine torque rise could be less than shown on the standard engine curve.) See the fuel setting adjustments and the turbocharger air manifold pressure check. |

**It is sometimes easier to change the engine fuel rate than to determine the true cause for low stall speed, but the customer ends up with an over-fueled engine which will also negatively affect durability. Do not increase the fuel rate as a ''cure-all.''**

## If The Stall Speed Is Too High, Check The Following:

| | Yes | No | |
|---|---|---|---|
| 1. | ____ | ____ | The engine is high in power. |
| 2. | ____ | ____ | The tachometer is in error. |
| 3. | ____ | ____ | The accessory power requirements are less than 10 percent of the gross engine power. |
| 4. | ____ | ____ | The converter oil is aerating (foaming) - check for low oil level, air leaks in suction line, oil does **not** contain a foam inhibitor, or suction screen or filter. (Should be accompanied by a noticeable loss of machine performance.) |
| 5. | ____ | ____ | The converter is being held at full stall. Check for a slipping front disconnect clutch or a rotating output shaft. On the converter-transmission package, this may be impossible to check. |
| 6. | ____ | ____ | The converter turbine element is beginning to fail and losing blades or the converter was originally built with the wrong size element. |
| 7. | ____ | ____ | The engine and converter match is correct. (Due to a revision in the engine rating or the converter performance.) |
| 8. | ____ | ____ | On the transmission-converter units with oil sump in the transmission, if the oil level is too high, it may cause severe aeration due to parts dipping in the oil. |
| 9. | ____ | ____ | The converter is performing to the published absorption curve. |
| 10. | ____ | ____ | The converter charging pressure is correct. |

The reasons for abnormal stall speeds listed above are some which have been encountered by Cummins representatives and probably do **not** include all possible causes. The correction of the problem is either covered in the vehicle service manual, the converter service manual, or is self-explanatory.

# Driveability - Low Power Check List (05-36)

## Engine Data

Engine SN _____ Fuel Pump SN _____

Engine Model _____ Fuel Pump Code _____

Engine Rating _____ Fuel Pump Type (AFC, VS) _____

## Equipment Data

Type _____ Model _____

Work Duty (What is equipment primarily used for) _____

_____

_____

_____

## Record of Complaint

1. Hour/Mileage when complaint started _____
   - After engine repair? _____ Yes _____ No
   - After equipment repair? _____ Yes _____ No
   - After change in equipment use? _____ Yes _____ No
2. What repair? _____

   _____

   _____
3. Old/New work duty _____

   _____

   _____
4. Performance compared to (circle one) A B C D
   - A. Fleet
   - B. Competition
   - C. Previous Performance
   - D. Personal Expectation

**This Page Can Be Copied For Your Convenience**

5. Performance Problems (please circle) A B C D E F G
   - A. Insufficient power to start form a stop.
   - B. Engine will not reach rated rpm.
   - C. Equipment road speed too slow.
   - D. Engine dies when load is applied.
   - E. Hesitation after deceleration or coasting.
   - F. Poor fuel consumption.
   - G. Other (specify) _____

6. Does complaint stop when engine driven accessories are not in use?

| | | |
|---|---|---|
| Air conditioning off. | _____ Yes | _____ No |
| Fan clutch in slip mode | _____ Yes | _____ No |
| Air compressor unloaded | _____ Yes | _____ No |
| Hydraulic pump unloaded | _____ Yes | _____ No |
| Power take-off not in use | _____ Yes | _____ No |

7. Additional comments _____

**This Page Can Be Copied For Your Convenience**

## Engine Factors (Use Dynamometer Sheet Included Below)

Air Inlet Restriction _____ (Spec: 25  Water, 1.8” Hg. @ Rated Speed & Load)

Exhaust Restriction _____ (Spec: 40  Water, 3  Hg. @ Rated Speed Load)

Fuel Inlet Restriction _____ (Spec: 4  Hg. Clean, 8  Hg. Dirty @ Rated Speed Load)

Fuel Drainline Restriction _____ (Measure at Junction Block Where Flexible Line Goes to Tank. Spec: 34  Water or 2.5 Hg. Maximum @ Rated Speed Load)

Record Governor Break RPM _____ Check Oil Level Low High OK

Install Sight Glass in Fuel Inlet Line Directly Before Pump, Watch for Air

AFC No Air Rail Pressure @ 1600 RPM (Disconnect Air Line From Intake Manifold to AFC; Plug Intake Manifold) _____

| ENGINE SPEED (RPM) | | | *FUEL | INTAKE | |
|---|---|---|---|---|---|
| DYNO | UNIT TACH | RATE (PPH) | RAIL PRESSURE (PSI) | MANIFOLD PRESSURE (PSI) | WHEEL HORSE POWER |
| | | | | | |
| | | | | | |
| | | | | | |
| | | | | | |
| | | | | | |
| | | | | | |
| | | | | | |
| | | | | | |
| | | | | | |
| | | | | | |

* Be Sure That Fuel Rate is Corrected for Temperature.

**This Page Can Be Copied For Your Convenience.**

# Fuel Consumption Check List (05-37)

Excessive fuel consumption is hard to find. Ask the operator or user the following questions. The questions will help in determining the cause.

By analysis of the present operating practices, it can be determined what changes can be made to improve fuel consumption. Be sure to use the vehicle, engine and the driveability, low power, fuel economy check list that follow.

_____ Mileage Expected

_____ Expectations based upon?

- _____ Other units in fleet
- _____ Competitive Engines
- _____ Previous engine owned
- _____ Was passed on hill
- _____ Was passed on flat
- _____ Expectations only

_____ Weather conditions during check?

- _____ Rain _____ Windy
- _____ Snow _____ Windy
- _____ Hot Temperature
- _____ Cold Temperature

_____ Loads compared to comparison unit:

- _____ Higher _____ Lower _____ Same

_____ Idle Time

_____ How is mileage calculated:

_____

_____

_____

_____ Operating Practices:

- _____ High Road Speed
- _____ Shift RPM
- _____ Operate at rated speed or above
- _____ Cruise Speed
- _____ Believe compensating for low power
- _____ MPH
- _____ Torque Peak

**This Page Can Be Copied For Your Convenience.**

## Fuel Consumption Check List
## (Vehicle Factors)

Engine versus vehicle specification can be based upon economy or fast trip schedules which will **not** produce what the owner desires. An analysis can often point out a compromise to more closely fit the current requirements.

_____ Engine Rated Speed _____ Horsepower

_____ Type Trailer _____

_____ Type Tires

_____ Bias _____ Std. Tread _____ Extra Tread

_____ Radial _____ Std. Tread

_____ Axle _____ Single _____ Dual

_____ Axle Ration _____

_____ Transmission _____

_____ Gross Vehicle Weight _____

_____ Wind Deflectors _____ Yes _____ No

_____ Pavement Operated On _____

_____ Fan Drive _____ Full Time _____ Variable

_____ Freon Compressor _____ Yes _____ No

_____ Power Steering _____ Yes _____ No

_____ Axle Alignment _____ Recent _____ Never

_____ Fuel Line Leaks

_____ Fuel Tank Vents

(**Must not** pressurize tank above 65 mm Hg [2.5 inch/mercury]

_____ Brake Drag

**This Page Can Be Copied For Your Convenience.**

## Fuel Consumption Check List
## (Engine Or Fuel System Factors)

Be sure to use this check list with the troubleshooting charts in the front of the book or the driveability, low power, fuel economy check list. Engine factors other than those related to the fuel system are covered in the other sections of this manual.

_____ Engine fuel pressure. Refer to Procedure 5-05.

_____ Engine fuel rate. Refer to Procedure 5-15.

_____ Turbocharger air pressure. Refer to Procedure 5-05.

_____ Fuel inlet restriction. See Low Power Chart.

_____ Fuel drain restriction. See the Specifications page.

_____ Air inlet restriction. Refer to Procedure 3-08.

_____ Exhaust restriction. Refer to Procedure 3-09.

_____ Fuel Temperature. See the Specifications page.

_____ Poor engine response. Refer to Procedure 5-18.

_____ Excessive Exhaust Smoke. Refer to the Troubleshooting Charts.

**This Page Can Be Copied For Your Convenience.**

# Section 06 - Electrical System

## Section Contents


| | Reference No. | Page No. |
|---|---|---|
| General Information | 06-01 | 6-2 |
| Specifications | 06-02 | 6-3 |
| Service Tools | 06-03 | 6-4 |


## System Troubleshooting and Repair List


| | Procedure No. | Page No. |
|---|---|---|
| Battery Terminals - Check | 06-04 | 6-5 |
| Batteries - Check | 06-05 | 6-5 |
| Starting Circuit - Check | 06-06 | 6-6 |
| Alternator Belt - Adjust | 06-07 | 6-12 |
| Alternator - Output Test | 06-08 | 6-14 |
| Alternator - Replace | 06-09 | 6-15 |
| Pulley, Alternator/Accessory Drive - Check | 06-10 | 6-18 |
| Starting Motor - Replace | 06-11 | 6-18 |
| Starting Motor | 06-12 | 6-19 |

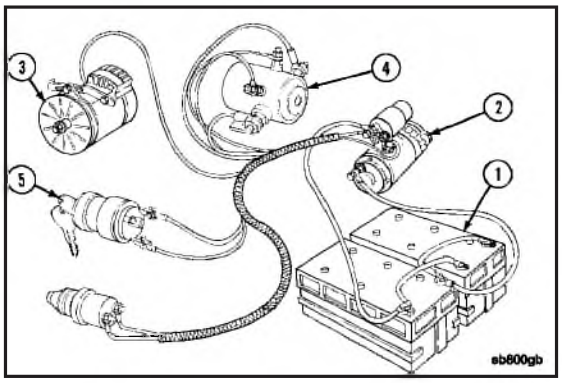


# General Information - (06-01)

The basic heavy-duty electrical system consists of:

- Batteries (1) (usually three or four connected in parallel).
- A starting motor (2).
- An alternator (3).
- A magnetic switch (4).
- An ignition switch (5).
- All necessary wiring.

All components must be carefully matched.

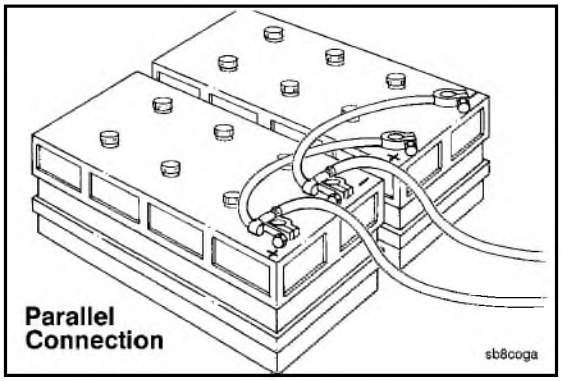


The accompanying illustrations show typical parallel and series battery connections.

1. Parallel connection

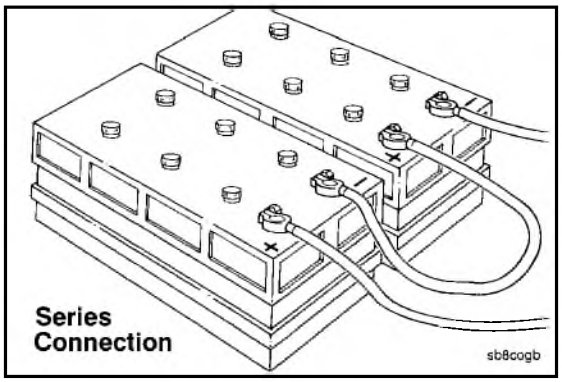


2. Series connection

# Electrical System Specifications - (06-02)

**Minimum battery capacity @ -18 to 0°C [0 to 32°F] ambient temperature**

12-volt starter 400 ampere hour.....1800 cold cranking amps @ -18°C [0°F]
24-volt starter 200 ampere hour .....900 cold cranking amps @ -18°C [0°F]

**Minimum battery capacity above 0°C [32°F] ambient temperature**

12-volt starter 300 ampere hour.....1280 cold cranking amps @ -18°C [0°F]
24-volt starter 150 ampere hour .....640 cold cranking amps @ -18°C [0°F]

**Maximum starting circuit resistance**

12-volt starter.....0.00075 OHMS
24-volt starter.....0.00200 OHMS

**Battery cable sizes - American wire gauge (Maximum length in cranking motor circuit)**

**12-volt**

No. 00.....3.7 Meters [12 Feet]
No. 000.....4.9 Meters [16 Feet]
No. 0000 or two No. 0* .....6.1 Meters [10 Feet]
Two No. 00.....7.6 Meters [25 Feet]

**12-volt High Output**

No. 00.....2.1 Meters [7 Feet]
No. 000.....2.7 Meters [9 Feet]
No. 0000 or two No. 0* .....3.7 Meters [12 Feet]
Two No. 00.....4.3 Meters [14 Feet]

**24 to 32-volt**

No. 00.....6.1 Meters [20 Feet]
No. 000.....8.2 Meters [27 Feet]
No. 0000 or two No. 0* .....10.7 Meters [35 Feet]
Two No. 00.....13.7 Meters [45 Feet]

**Minimum ambient temperature without starting aid** .....Refer to the following chart.

**Minimum cranking speed without starting aid** .....150 RPM

* Two strands of No. 0 cable may be used in place of one No. 0000 cable providing all connections are carefully made to ensure equal current flow in each parallel cable.

Refer to the following chart to determine the temperature for which a cold weather starting aid is required.

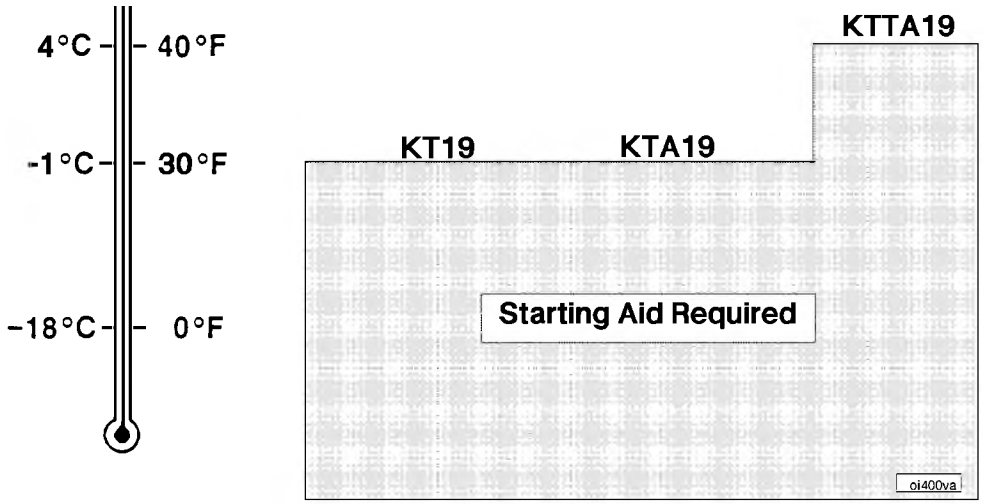


**Note:** Starting aids such as block heaters, lubricating oil pan heaters. etc., are available to aid in cold weather starting.

# Cummins Service Tools - (06-03)

The following special tools are recommended to perform the procedures in Section 06. The use of these tools is shown in the appropriate procedure. These tools can be purchased from your local Cummins Authorized Repair Location.

| Tool No. | Tool Description | Tool Illustration |
|---|---|---|
| N/A | **Battery Charger**<br>Restore the state of charge of a battery. | 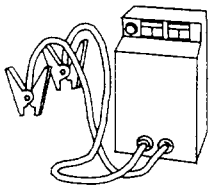 |
| N/A | **Battery Hydrometer**<br>Check specific gravity of individual battery cells (for batteries with removeable cell caps or covers). | |
| ST-1293 | **Belt Tensioner Gauge**<br>Measure alternator belt tension. | 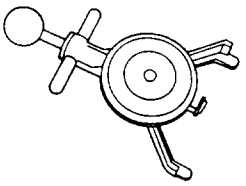 |
| 3376898 | **Digital Multimeter**<br>Measure voltage (volts) and resistance (ohms) in a circuit. | 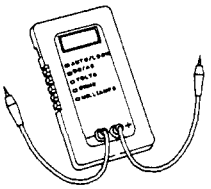 |
| 3377193 | **Inductive Charging - Cranking Systems Analyzer**<br>Test generators, alternators, relays, starters, regulators, and batteries. Contains built-in voltmeter and ammeter. | 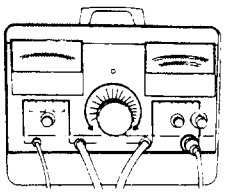 |
| | | |

## Battery Terminal Connections - Check (06-04)

1. Visually inspect the battery terminals for loose, broken or corroded connections. Repair or replace broken cables or terminals.

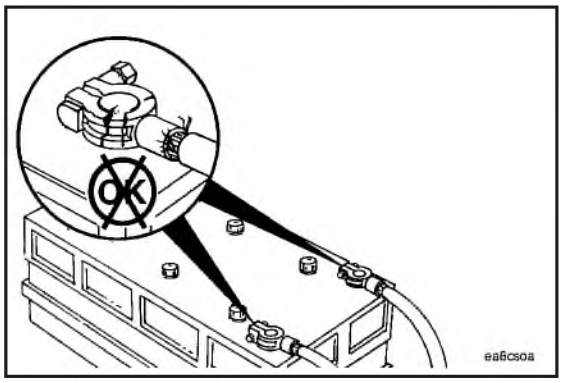


2. If the connections are corroded, remove the cables and use a battery brush to clean the cable and battery terminals. Install and tighten the battery cables. Use grease to coat the battery terminals to prevent corrosion.

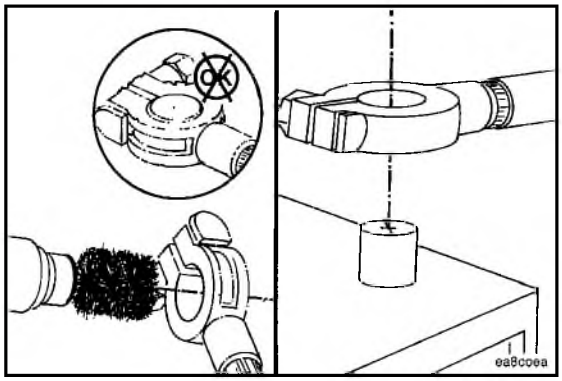


## Batteries - Check (06-05)

1. Use Part No. 3377193 analyzer to load test the state-of-charge of maintenance free batteries. If the state-of-charge is low use a battery charger to charge the battery. Refer to the manufacturer's instructions. Replace the battery if it will not charge to the manufacturer's specifications or will not maintain a charge.

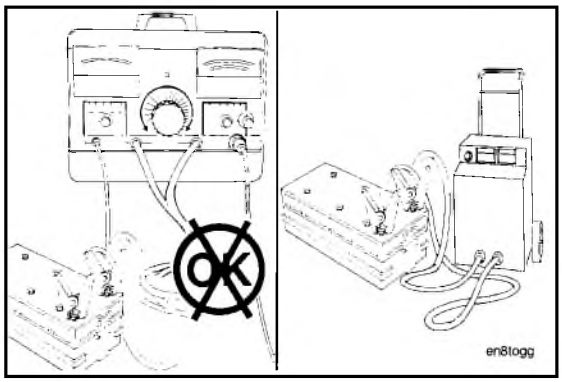


2. If conventional batteries are used, remove the cell caps or covers and check the electrolyte (water and sulfuric acid solution) level.

**NOTE:** Maintenance-free batteries are sealed and do not require the addition of water.

3. Fill each battery cell with water. Refer to the manufacturer's specifications.

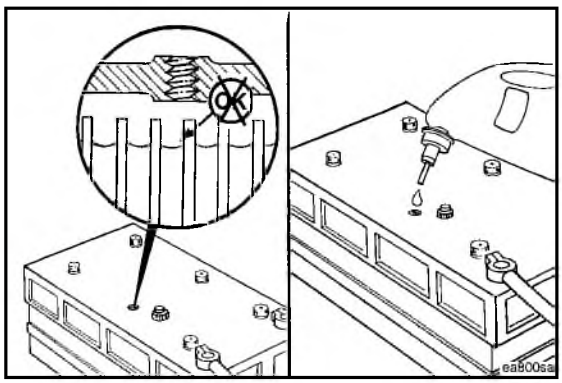

| Battery State of Charge | Specific Gravity @ 27°C [80°F] |
|---|---|
| 100% | 1.260-1.280 |
| 75% | 1.230-1.250 |
| 50% | 1.200-1.220 |
| 25% | 1.170-1.190 |
| Discharged | 1.110-1.130 |

ea800ka

4. Refer to the accompanying chart to determine the battery state-of-charge based on the specific gravity readings.

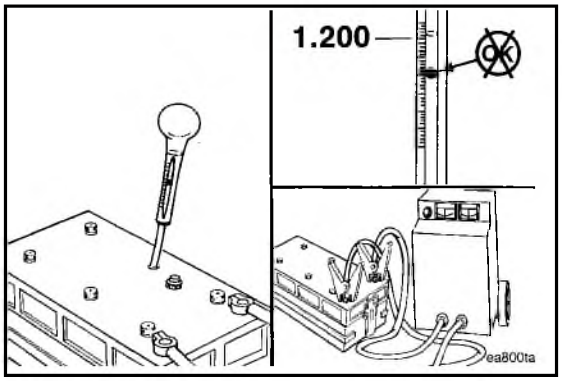


5. Use a hydrometer to measure the specific gravity of each cell.

**NOTE:** If the specific gravity of any cell is below 1.200, the battery must be charged.

**NOTE:** Do not attempt to check the specific gravity of a battery immediately after adding water. If it is necessary to add water to allow use of the hydrometer, the battery should be subjected to several minutes of charging at a high rate to mix the electrolyte.

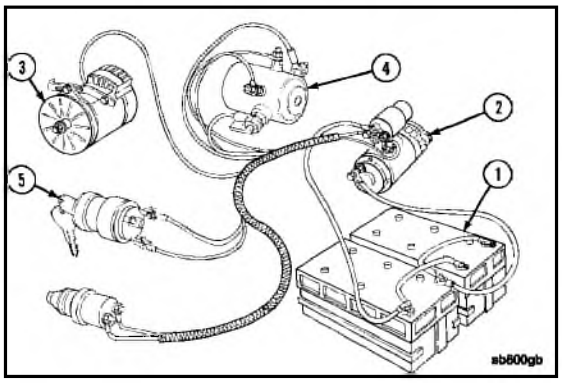


## Starting Circuit - Check (06-06)

1. The starting circuit includes the batteries, starting motor, alternator, magnetic switch, ignition switch, and connecting wiring.

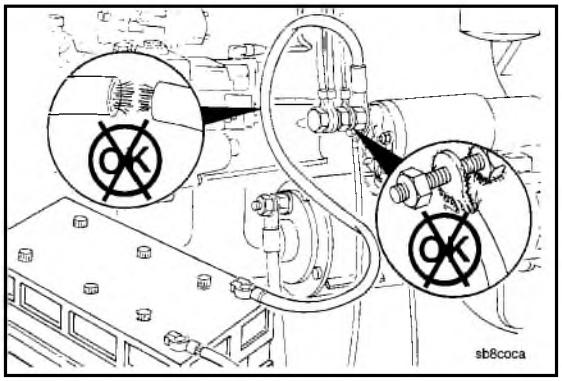


2. Before checking specific starting system components with the multimeter:
   a. Visually inspect terminals for loose, broken, or corroded connections.
   b. Replace or repair wiring and components as necessary.

## Magnetic Switch - Check

**Warning: Be sure the starter switch is in the ''off'' position to prevent electrical shock and personal injury.**

1. Remove the cable connecting the magnetic switch to the starter solenoid from the magnetic switch terminal.
2. Connect the leads of the Part No. 3376898 digital multimeter to the two large switch terminal.

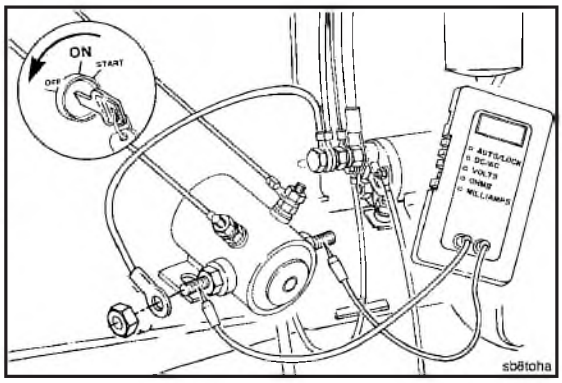


3. Set the multimeter to measure resistance (OHMS).
4. With the starter switch in the ''off'' position, the multimeter must indicate resistance at infinity.
   a. If the multimeter indicates zero (''0'') or very little resistance replace the magnetic switch.
   b. If the multimeter indicates resistance at infinity proceed with step 5.

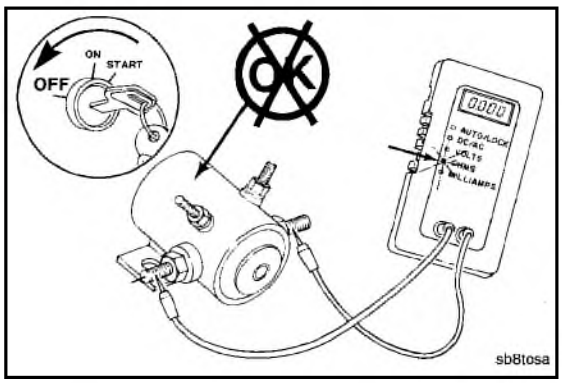


5. Turn the starter switch to the ''START'' position.
6. The multimeter must indicate zero (''0'') or very little resistance. An audible click will be heard when the starting switch is turned to the ''START'' position.

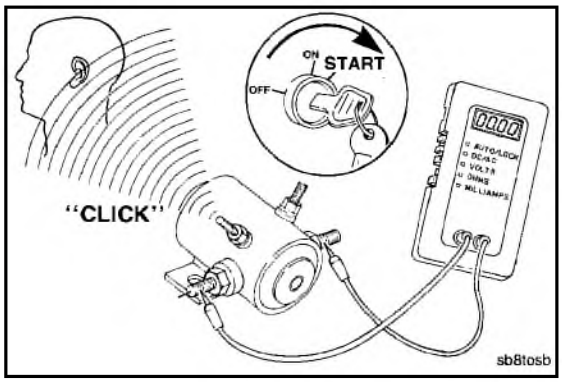


7. If the multimeter indicates resistance at infinity with the starter switch in the ''START'' position and an audible click is not heard:
   a. Turn the starter switch to the ''off'' position.
   b. Set the multimeter scale to read DC voltage.

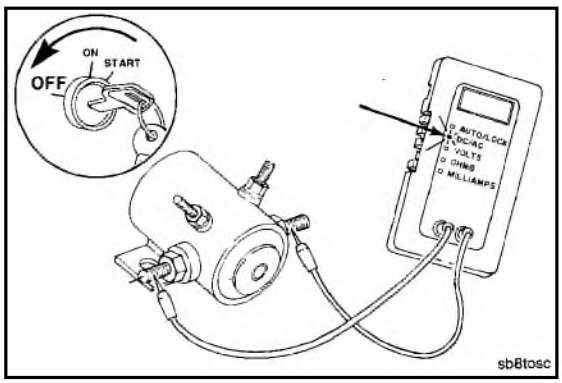

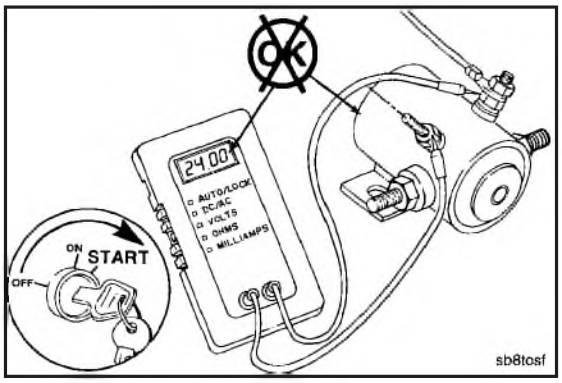


c. Connect one multimeter lead to the magnetic switch ground wire terminal and the other lead to the small magnetic switch terminal.

d. Turn the starter switch to the ''START'' position.

e. The multimeter should indicate some voltage across the magnetic switch terminals. If the multimeter indicates FULL SYSTEM VOLTAGE, the magnetic switch is malfunctioning and must be replaced.

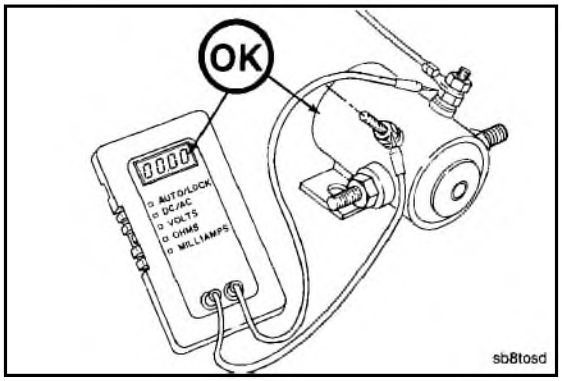


f. If the multimeter indicates no voltage, the magnetic switch is not the cause of the complaint. Refer to ''Starter Switch - Check'' in this section.

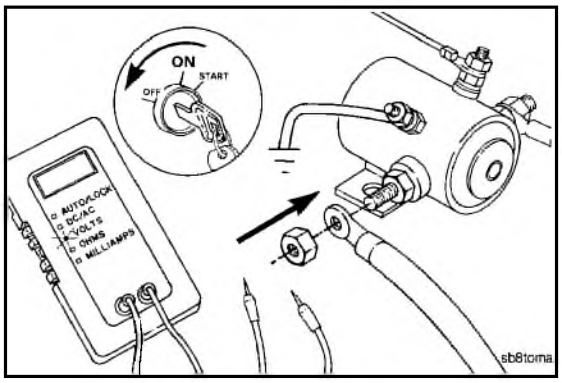


g. Turn the starter switch to the ''off'' position.

h. Remove the multimeter leads and connect the magnetic switch to starter solenoid wire.

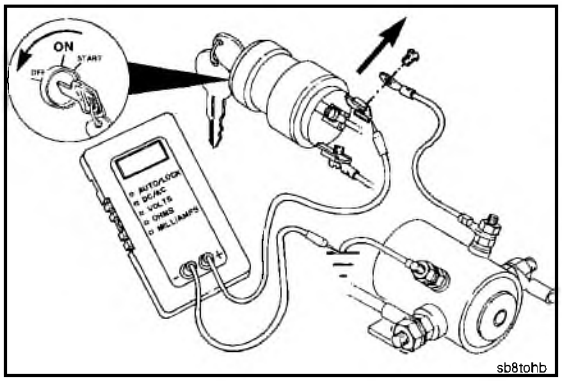


## Starter Switch - Check

**Warning: Be sure the starter switch is in the ''off'' position to prevent electrical shock and personal injury.**

1. Remove the wire connecting the starter switch to the magnetic switch from the starter switch terminal.
2. Connect the positive lead of the Digital Multimeter, Part No. 3376898, to the starter switch terminal and the negative lead to a chassis or engine ground location.

**NOTE:** With the starter switch in the ''off'' position, there must be no voltage at the starter switch terminal. If the multimeter indicates voltage, the starter switch is malfunctioning and must be replaced.

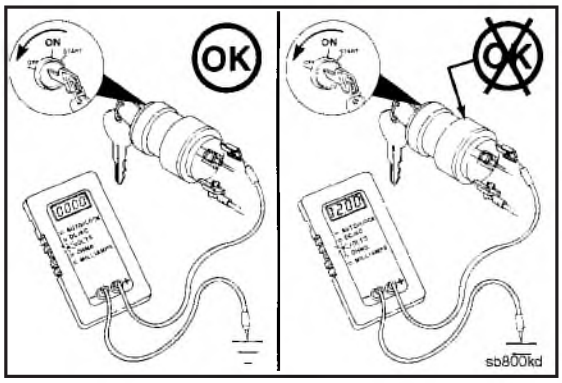


3. Turn the starter switch to the ''start'' position.
4. The multimeter must indicate system voltage.

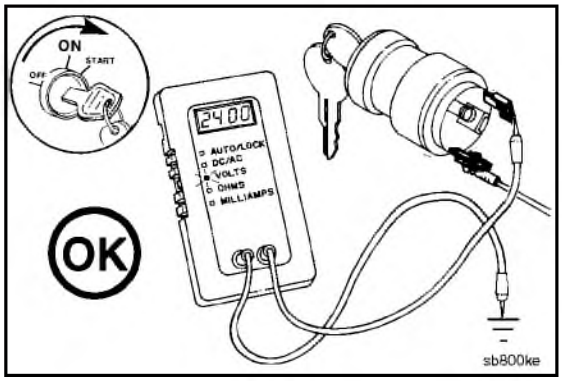


5. If there is no voltage:
   a. Turn the starter switch to the ''off'' position.
   b. Connect the multimeter positive lead to the starter switch terminal having a wire connecting the starter switch to the starter solenoid.

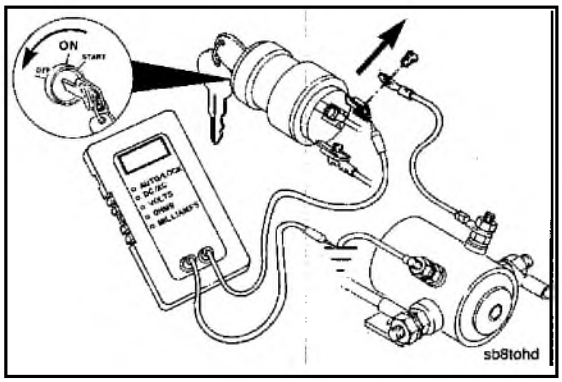


6. If the multimeter indicates system voltage, the starter switch is defective and must be replaced.

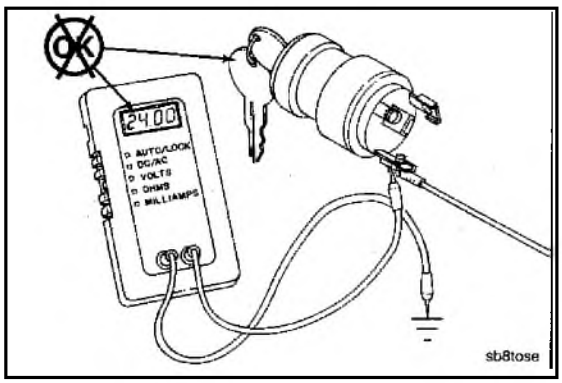

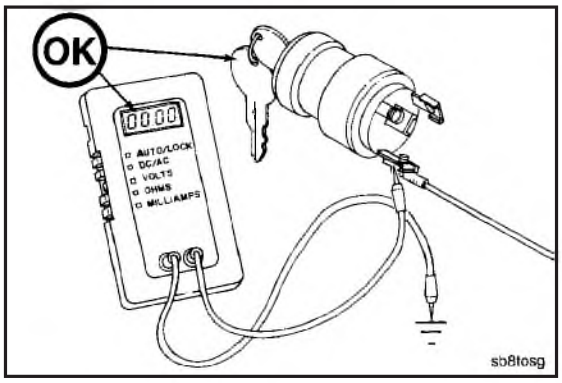


7. If the multimeter indicates no voltage, the switch is not the cause of the complaint.

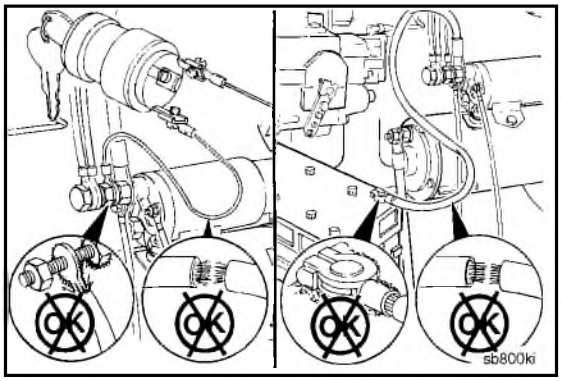


8. Check the wiring from the starter switch to the starter solenoid and from the starter solenoid to the battery.

   Replace any broken or damaged wires.

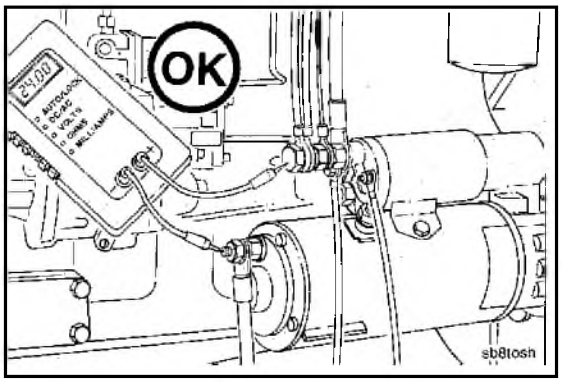


## Starter Solenoid and Starting Motor - Check

1. Use the multimeter, Part No. 3376898, and set it to measure DC voltage.
2. Connect the multimeter positive lead to the starter solenoid positive cable terminal and the negative lead to the battery cable connection at the starting motor. The multimeter must show system voltage.

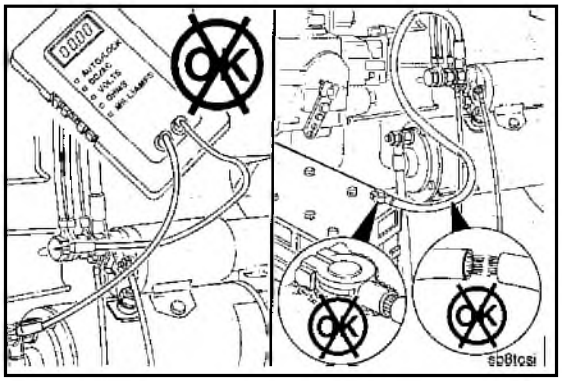


3. If the multimeter does not indicate system voltage, check the battery to starting motor cable for breaks, loose or corroded connections.

4. If the multimeter indicates system voltage but the starting motor will not operate, check the wire connecting the starter solenoid to the starter switch for breaks, loose or corroded connections.

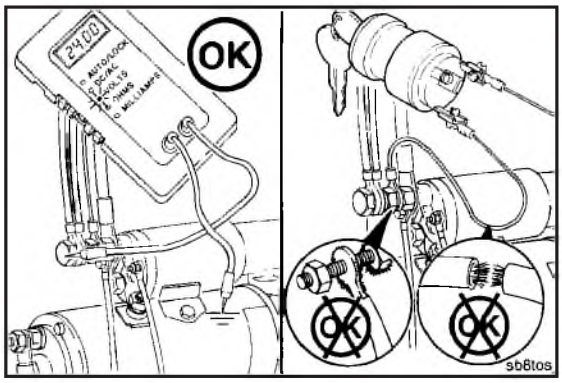


5. If the wire connecting the starter solenoid and starter switch is not loose or damaged and the starter will not operate:

   a. Remove the cable connecting the starting motor and starter solenoid from the solenoid terminal.

   b. Connect the multimeter positive lead to the solenoid positive terminal and the negative lead to a chassis or engine ground.

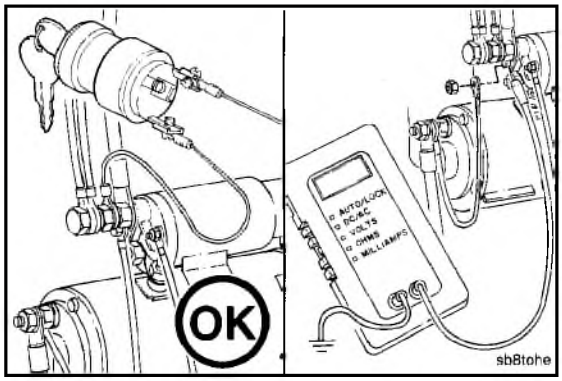


   c. Turn the starter switch to the ''start'' position.

   d. If the multimeter indicates system voltage, the starter solenoid is malfunctioning and must be replaced.

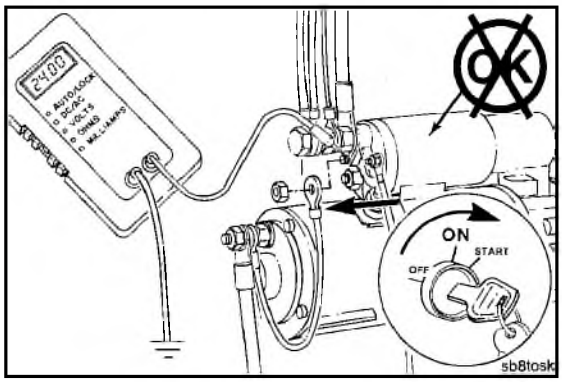


   e. If the multimeter does not indicate system voltage, check the wire connecting the starter solenoid to the magnetic switch for breaks, loose or corroded connections.

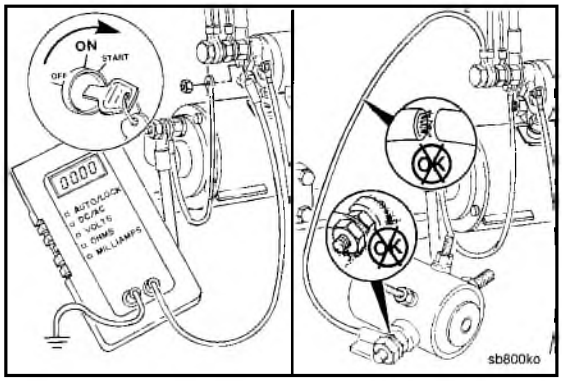

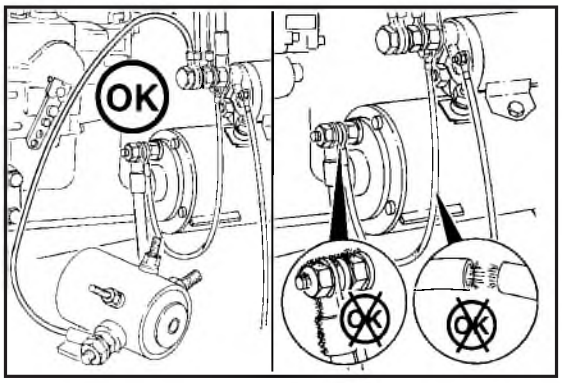


6. If the wire connecting the starter solenoid to the magnetic switch is not loose or damaged and the starting motor will not operate:
   a. Check the cable connecting the starter solenoid to the starting motor for breaks, loose or corroded connections.

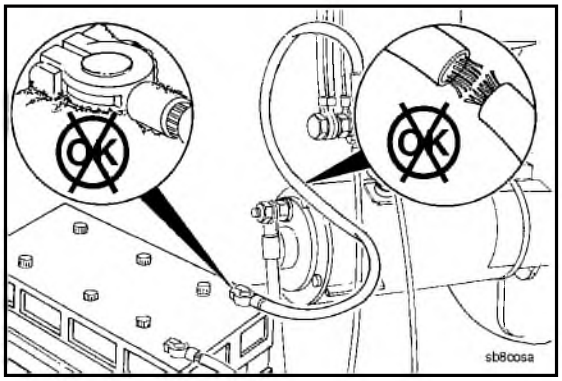


   b. Check the cable connecting the starter to the battery for breaks, loose or corroded connections.

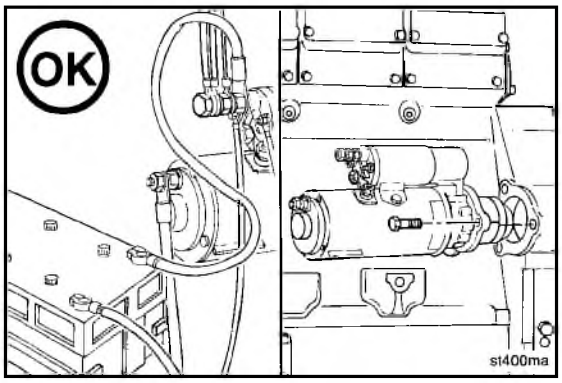


   c. If the cables are not loose or damaged, the starting motor is defective and must be replaced.

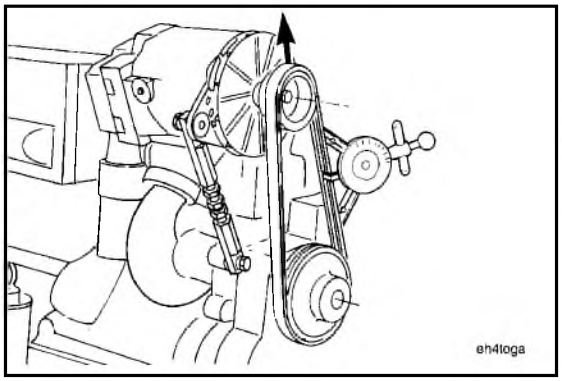


## Alternator Belt - Adjust (06-07)

### Check

1. Use the belt tension gauge, Part No. ST-1293. Check the belt tension. Belt tension must be 220 kPa [165 ft-lb].

## Adjust

1. Loosen the alternator and adjusting link mounting capscrews.
2. Loosen the jam nuts on the adjusting screw.

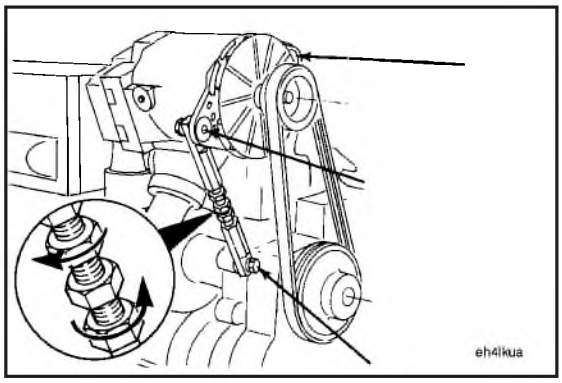


3. Turn the adjusting screw clockwise to tighten the belt tension.

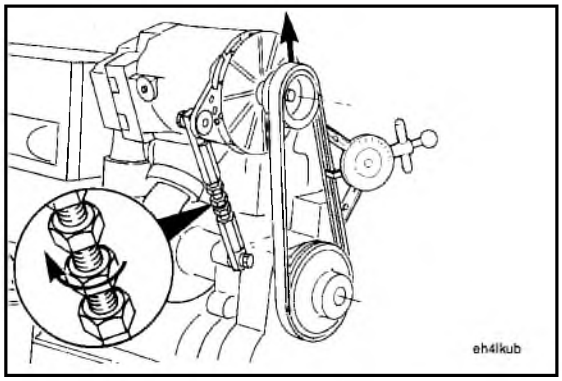


**Caution: The lower jam nut has left-hand threads.**

4. Tighten the jam nuts on the adjusting screw to 55 N•m[40 ft-lb].
5. Tighten the adjusting link and alternator mounting capscrews to 55 N•m[40 ft-lb].

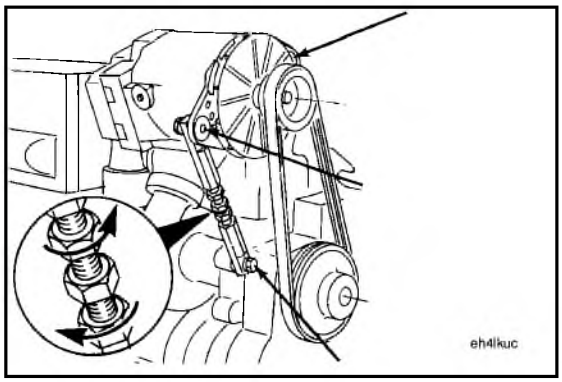


6. Check the belt tension again to make sure it is correct.

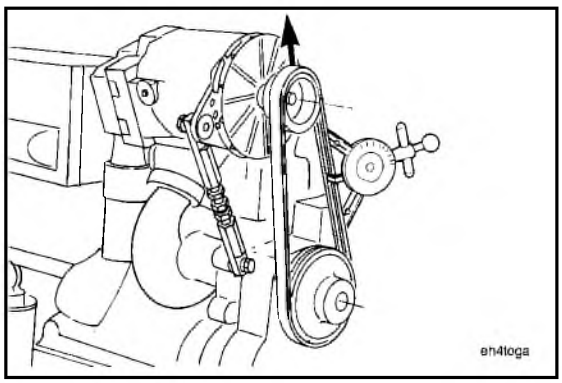

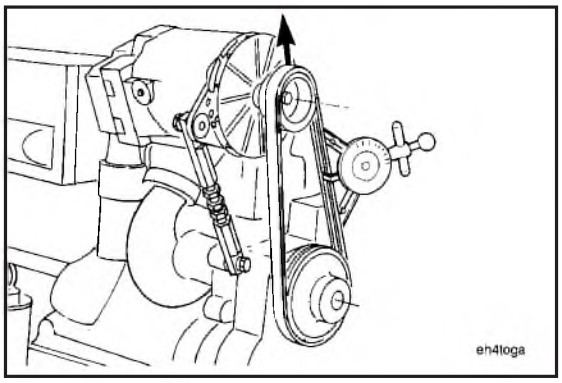


# Alternator - Output Test (06-08)

1. The following instructions are for use with the Part No. 3377193 Inductive Charging and Cranking system Analyzer, or equivalent.

**NOTE:** Before performing the following test, be sure the alternator belt is tightened to the correct specifications. Refer to Procedure 06-07.

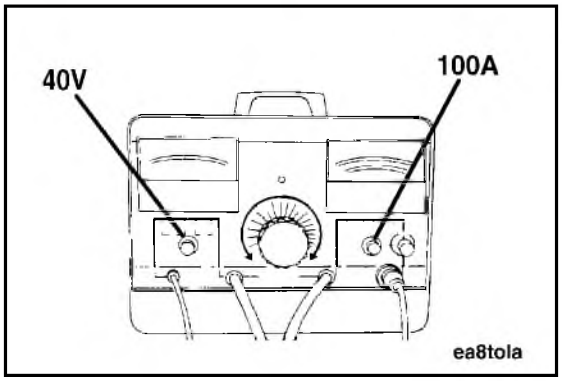


2. Set the voltage selector knob to the appropriate scale. For a 24 volt system, choose the 40 volt scale.
3. Set the amp selector knob to 100 amps.

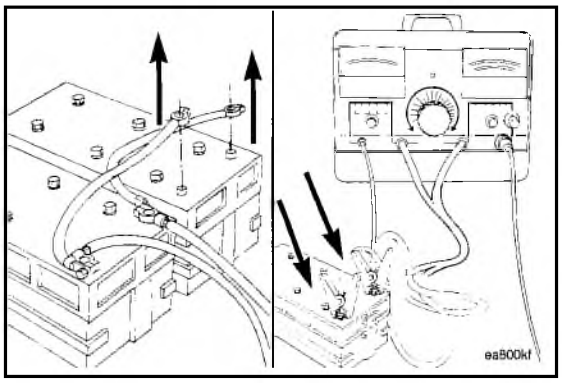


4. Remove the cables to any other battery in the circuit.
5. Connect the correct analyzer leads to the positive and negative terminals on the battery.

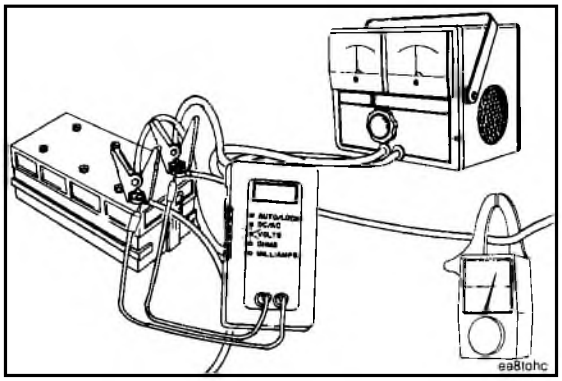


6. Connect the clamp-on amp pick-up to the alternator output cable as far away from the alternator as possible.

7. Operate the engine at high idle and turn the analyzer load control knob clockwise until a maximum amps reading is reached.

**NOTE:** Do not let the load volts drop below 26 volts for a 24 volt system.

8. The maximum amps reading is the alternator output, and must meet the alternator manufacturer's specifications.

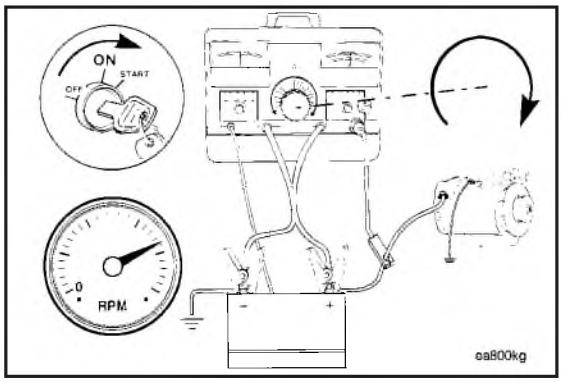


**NOTE:** The alternator maximum rated output is normally stamped or labeled on the alternator.

**NOTE:** Also check the equipment ammeter gauge. If it does not read approximately the same as the test equipment, it should be replaced.

**NOTE:** If the alternator output is not within 10 percent of rated output, repair or replace the alternator. Refer to the manufacturer's instructions.

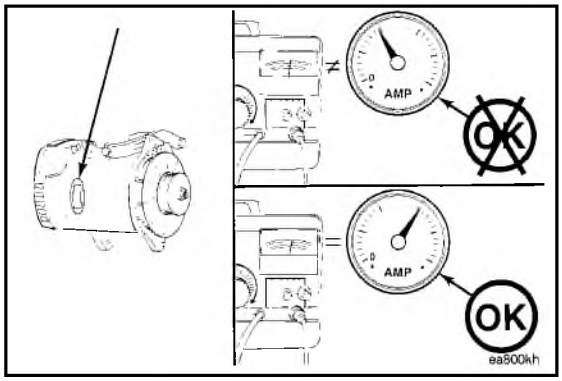


9. Turn the analyzer load control knob counterclockwise to the ''off'' position and shut off the engine.

   Remove the test equipment and connect any battery cables that were removed.

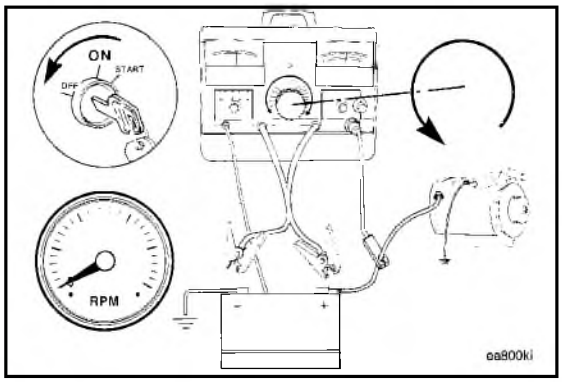


## Alternator - Replace (06-09)

### Remove

1. Disconnect the batteries. Disconnect the wiring from the alternator.

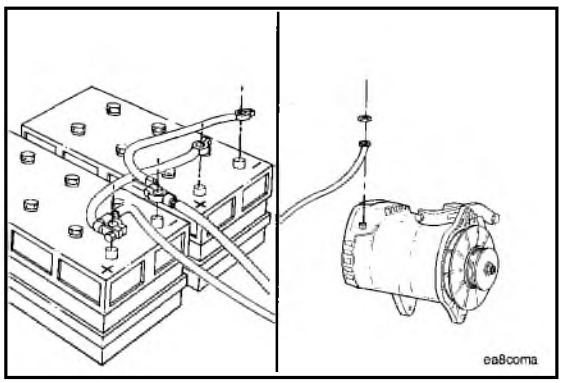

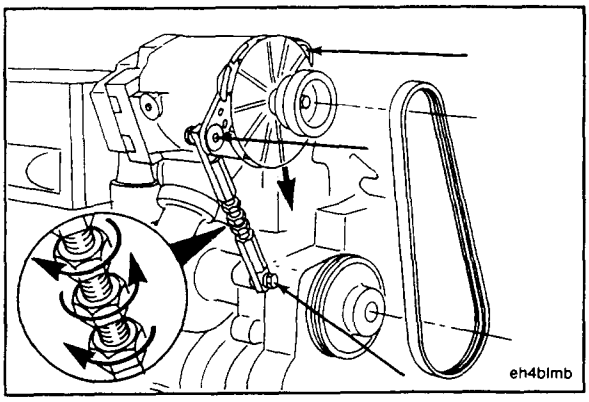


2. Loosen the adjusting link and the alternator mounting capscrews.

**Caution: The lower jam nut has left-hand threads.**

3. Loosen both of the jam nuts. Turn the adjusting screw to relieve the belt tension.
4. Remove the alternator belt.

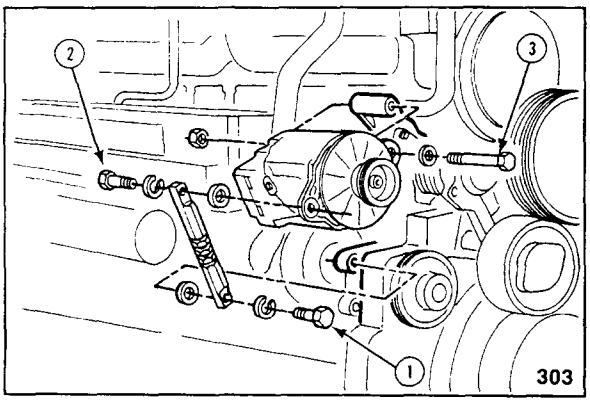


5. Remove capscrews (1) and (2) and the adjusting link.
6. Remove capscrew (3) and nut. Remove the alternator.

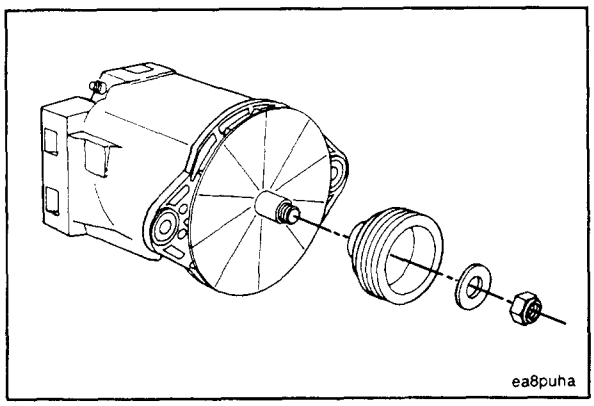


## Check for Reuse

1. Remove the nut and pulley from the alternator.
2. Clean and check the pulley for reuse. Refer to Procedure 06-10.

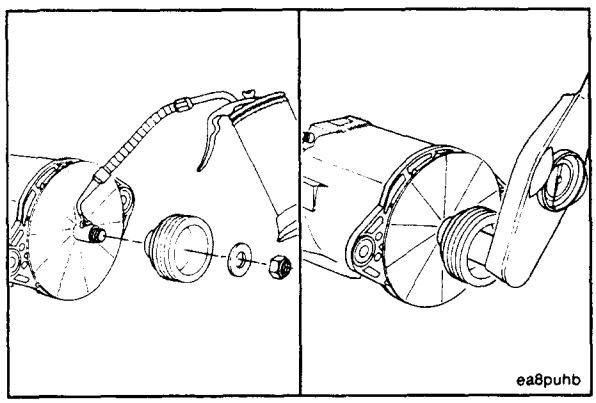


## Install

1. Lubricate the shaft with engine oil. Install the pulley and nut on the alternator shaft. Tighten the nut to 100 N•m[75 ft-lb].

2. The belt must be adjusted before the capscrews are tightened.

**Note:** The end of the adjusting link with the largest area at the capscrew hole must be nearest to the alternator.

3. Install the alternator and the adjusting link as shown.

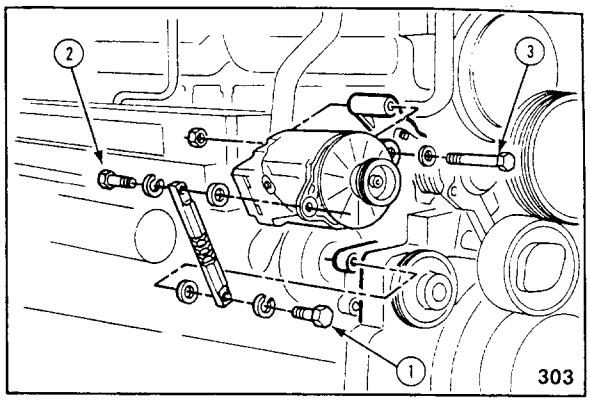


**Caution: Do not attempt to pry the belt on the pulley.**

4. Install the belt. Turn the adjusting screw counter-clockwise to shorten the link if necessary.

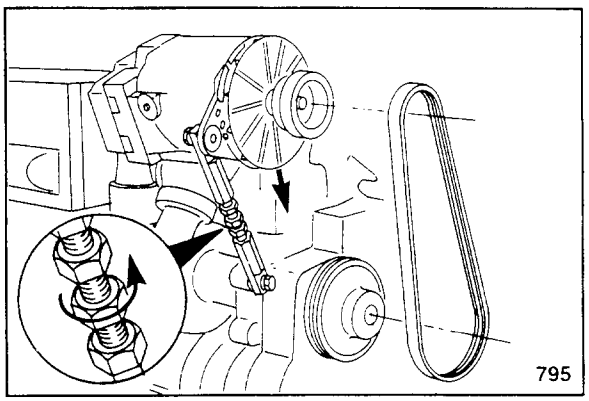


5. Turn the adjusting screw clockwise to tighten the belt. Tighten the belt to 220 N•m[165 ft-lb].

   Use the (Burroughs) belt tension gauge, Part No. ST-1293, to check the belt tension.

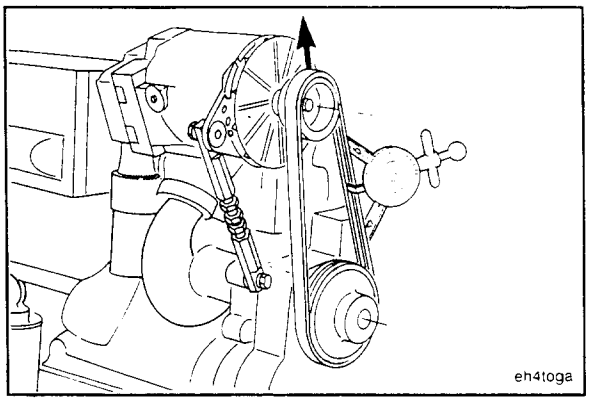


**Caution: The lower jam nut has left-hand threads.**

6. Tighten the jam nuts on the adjusting screw to 55 N•m[40 ft-lb].
7. Tighten the adjusting link and alternator mounting capscrews to 55 N•m[40 ft-lb].

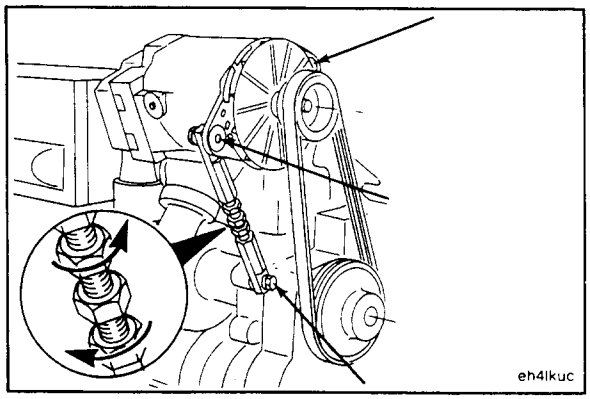

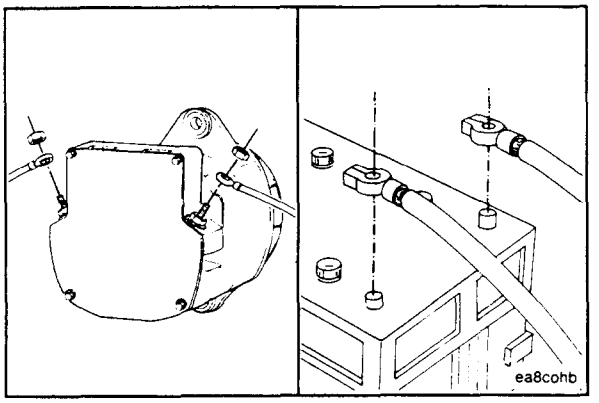


8. Connect the wiring to the alternator.
9. Connect the batteries.

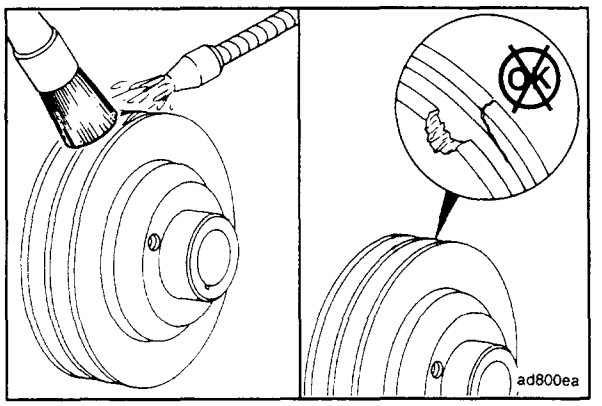


## Accessory/Alternator Drive Pulley - Check for Reuse (06-10)

1. Clean the alternator drive and accessory drive pulley with steam or solvent.
2. Check the grooves of the pulley for wear. Check the wear sleeve on the accessory drive pulley. If the part must be replaced, refer to Procedure 07-29.

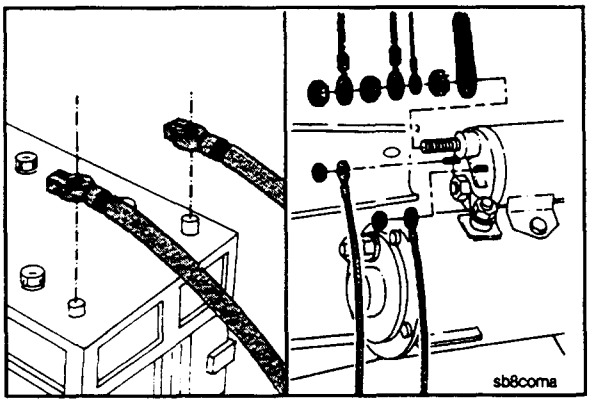


## Starting Motor - Replace (06-11)

### Remove

1. Disconnect the battery.
2. Remove the electrical connections from the starting motor.

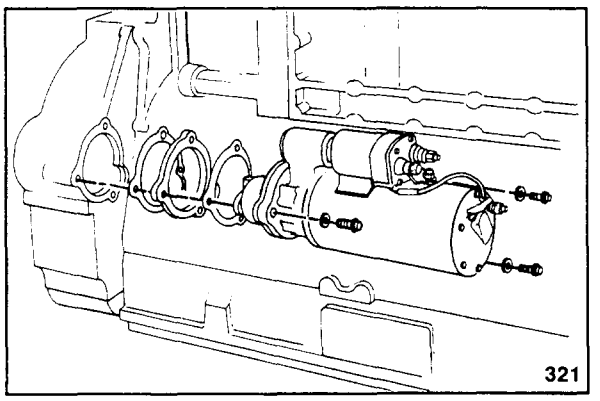


3. Remove the starting motor capscrews, the starter, spacers, and the gaskets. Discard the gaskets.

**Note:** All engines do not contain spacers and gaskets.

## Install

**Note:** All engines do not use spacers.

**Note:** The wet type flywheel housing requires gaskets for the starting motor.

1. Install any spacer or gaskets.
2. Install the starting motor and capscrews. Use the following to tighten the capscrews.

| Starting Motor Torque Value | | |
|---|---|---|
| Flywheel Housing | N•m | [ft-lb] |
| Cast iron | 215 | [160] |
| Aluminum | 195 | [145] |

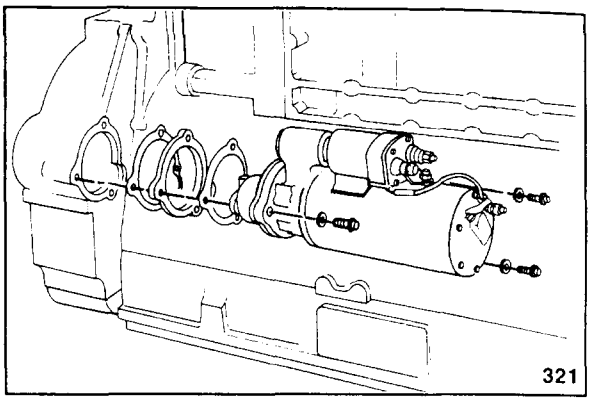


1. Install the electrical connections to the starting motor.
2. Connect the batteries.

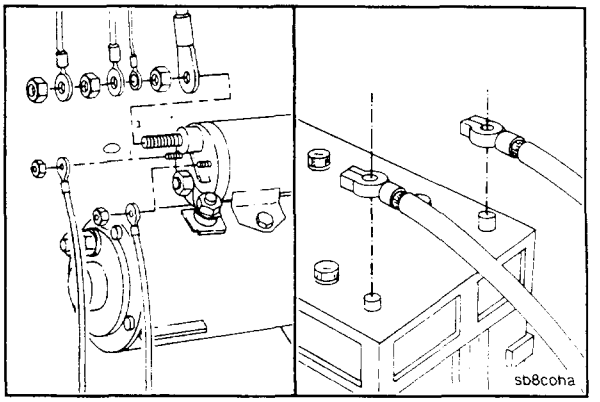


## Starter Motor - Check for Reuse (06-12)

**Warning: Wear protective clothing to prevent personal injury from burns.**

1. Clean the exterior of the motor with steam.
2. Check the gear, shaft, and the bushing for wear or damage.
3. Lubricate the bushing with engine oil.

**Note:** A pipe plug must be removed to lubricate the bushing on some starter motors.

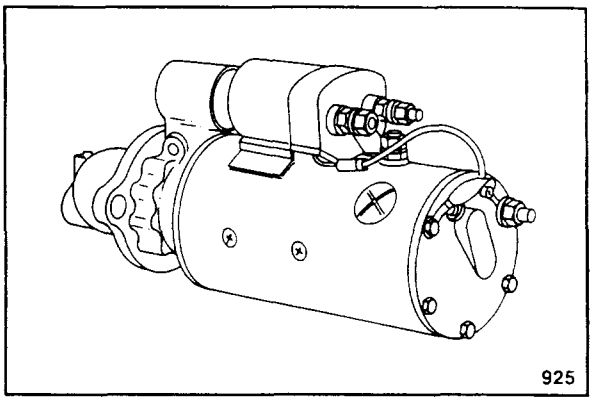

# NOTES

# Section 07 - Base Engine Components

## Section Contents


| | Reference No. | Page No. |
|---|---|---|
| Service Tools | 07-01 | 7-3 |
| General Information | 07-02 | 7-9 |


## System Troubleshooting and Repair List


| | Reference No. | Page No. |
|---|---|---|
| Crankcase Gas (Blowby) - Check | 07-03 | 7-9 |
| Rocker Lever Cover - Replace | 07-04 | 7-13 |
| Check/Adjust Valves and Injectors | 07-05 | 7-17 |
| Jacobs Engine Brake - Adjust | 07-06 | 7-24 |
| Jacobs Engine Brake - Replace | 07-07 | 7-29 |
| Push Rods - Replace | 07-08 | 7-31 |
| Rocker Lever Assembly - Replace | 07-09 | 7-33 |
| Rocker Lever Assembly - Clean and Check for Reuse | 07-10 | 7-35 |
| Rocker Lever Housing - Replace | 07-11 | 7-37 |
| Check Cylinder Head Gasket for Combustion, Coolant, or Oil Leak | 07-12 | 7-43 |
| Power Cylinder - Locate Failed Cylinder | 07-13 | 7-45 |
| Cylinder Head Gasket - Replace | 07-14 | 7-47 |
| Cylinder Head - Clean and Check for Reuse | 07-15 | 7-58 |
| Pressure Test Cylinder Head - Head Removed | 07-16 | 7-60 |
| Cam Follower Assembly - Replace | 07-17 | 7-64 |
| Cam Follower Assembly - Clean and Check for Reuse | 07-18 | 7-68 |
| Injection Timing - General Information | 07-19 | 7-69 |
| Measure the Injection Timing | 07-20 | 7-71 |
| Piston Cooling Nozzles - Replace | 07-21 | 7-80 |
| Main Crankshaft Bearing - Replace | 07-22 | 7-80 |
| Connecting Rod Bearings - Replace | 07-23 | 7-88 |
| Piston Rod Assembly - Replace | 07-24 | 7-93 |
| Piston - Clean and Check for Reuse.. | 07-25 | 7-105 |
| Cylinder Liner - Remove | 07-26 | 7-108 |
| Check Liner Protrusion | 07-27 | 7-119 |
| Accessory Drive Pulley - Replace | 07-28 | 7-120 |
| Wear Sleeve, Accessory Drive Pulley - Replace | 07-29 | 7-121 |
| Accessory Drive Seal - Replace | 07-30 | 7-123 |
| Accessory Drive Assembly - Replace | 07-31 | 7-125 |
| Fuel Pump/Compressor Drive - Clean and Check for Reuse | 07-32 | 7-129 |
| Vibration Damper - Replace | 07-33 | 7-129 |
| Viscous Vibration Damper - Clean and Check for Reuse | 07-34 | 7-132 |
| Rubber Vibration Damper - Clean and Check for Reuse | 07-35 | 7-133 |
| Crankshaft Front Seal - Replace | 07-36 | 7-134 |

| | Reference No. | Page No. |
|---|---|---|
| Water Pump Drive - Replace | 07-37 | 7-137 |
| Water Pump Drive - Clean and Check for Reuse | 07-38 | 7-141 |
| Gear Cover (One Piece) - Replace | 07-39 | 7-141 |
| Camshaft Gear - Replace (Camshaft Installed) | 07-40 | 7-155 |
| Gear Cover Plate (Spacer Plate) - Replace | 07-41 | 7-160 |
| Gear Cover (Two Piece) - Replace | 07-42 | 7-166 |
| Gear Housing (Two Piece Design) - Replace | 07-43 | 7-176 |
| Check Gear Train Backlash | 07-44 | 7-188 |
| Idler Shaft (Press-in) - Replace | 07-45 | 7-188 |
| Front Engine Support - Replace | 07-46 | 7-191 |
| Crankshaft Gear - Remove and Install | 07-47 | 7-193 |
| Camshaft - Replace | 07-48 | 7-195 |
| Camshaft Gear - Remove and Install | 07-49 | 7-204 |
| Cylinder Block Camshaft Bushings | 07-50 | 7-207 |
| Camshaft Rear Cover - Replace | 07-51 | 7-208 |
| Flywheel - Replace | 07-52 | 7-210 |
| Crankshaft Seal Rear - Replace | 07-53 | 7-213 |
| Flywheel Housing - Replace | 07-54 | 7-214 |
| Flywheel Housing - Redowel to Cylinder Block | 07-55 | 7-223 |
| Pipe Plugs and Cup Plugs - Replace | 07-56 | 7-227 |

# Service Tools (07-01)

The following special tools are recommended to perform the procedures in Section 07. The use of these tools is shown in the appropriate procedure. These tools can be purchased from your local Cummins Authorized Repair Location.

| Tool No. | Tool Description | Tool Illustration |
|---|---|---|
| ST-647 | **Puller**<br>Remove the alternator and accessory drive pulleys. | 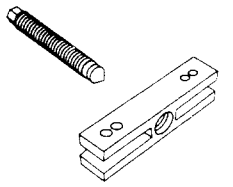 |
| 3375066 | **Cummins Pipe Sealant**<br>Install on pipe plug threads to prevent leaks. | 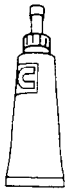 |
| 3376326 | **Pulley Installation Tool**<br>Install the alternator and accessory drive pulleys. | 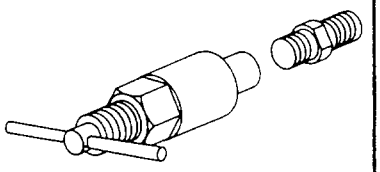 |
| 3376280 | **Camshaft Pilot**<br>Install camshaft without damaging the camshaft bushings or camshaft. | 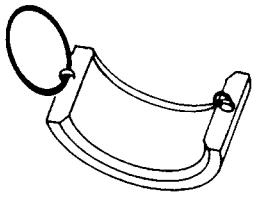 |
| 3376637 | **Camshaft Bushing Driver**<br>Install and remove camshaft bushings. Includes slide hammer and extension shaft. Use with one of the mandrels. | |
| 3376634 | **Camshaft Bushing Mandrel**<br>Install and remove camshaft bushings for engines with a 3.188 inch cam bore. Use with the Part No. 3376637 Driver. | 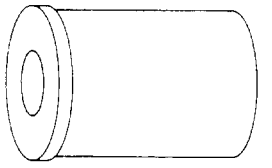 |

| Tool No. | Tool Description | Tool Illustration |
|---|---|---|
| 3376635 | **Camshaft Bushing Mandrel**<br>Install and remove camshaft bushings for engines with a 3.254 inch cam bore. Use with Part No. 3376637 Driver. | 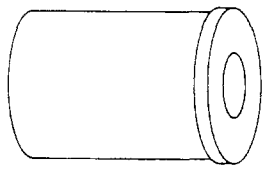 |
| 3376400 | **Camshaft Gear Puller Kit**<br>Remove camshaft gear from camshaft without removing camshaft from the engine. | 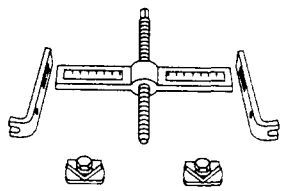 |
| 3375098 | **Connecting Rod Guide Pins**<br>Special nylon pins used to protect the crankshaft journal by guiding the connecting rod during installaltion or removal. | 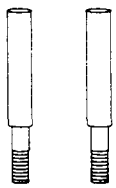 |
| 3375788 | **Engine Blow-by Tool**<br>Measure crankcase pressure by allowing a specific flow of gas through a precision (0.302 inch) orifice. Use with a water manometer or gauge. | 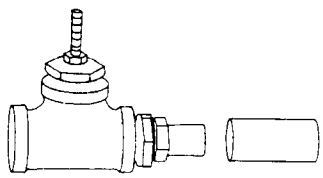 |
| 3377143 | **Engine Blow-by Tool**<br>Measure crankcase pressure by allowing a specific flow of gas through a precision (0.354 inch) orifice. Use with a water manometer or gauge. | 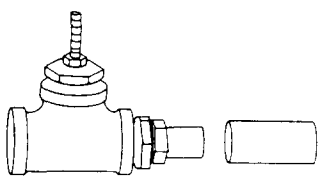 |
| 3377471 | **Engine Blow-by Tool**<br>Measure crankcase pressure by allowing a specific flow of gas through a precision (0.406 inch) orifice. Use with a water manometer or gauge. | 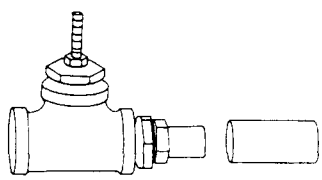 |
| 3375835 | **Puller Jaw**<br>Remove the crankshaft gear from the crankshaft. Use with Part No. 3376834 Bridge Assembly. | 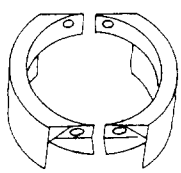 |
| 3375834 | **Bridge Assembly**<br>Remove the crankshaft gear from the crankshaft. Use with Part No. 3375835 Puller Jaw. | 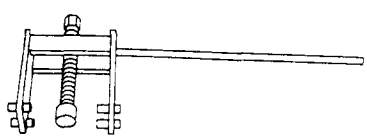 |

| Tool No. | Tool Description | Tool Illustration |
|---|---|---|
| ST-547 | **Gauge Block**<br>Measure cylinder liner protrusion. | |
| ST-448 | **Valve Spring Compressor**<br>Compress the valve spring to allow the valve to be removed or installed. | 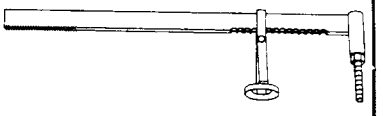 |
| 3375960 | **Valve Spring Compressor**<br>Compress the valve spring to allow the valve to be removed or installed. This tool is air-operated. | 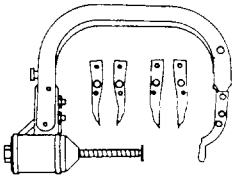 |
| ST-1012 | **Hydrostatic Tester**<br>Check for coolant leaks in the cylinder head. Requires shop air, a lifting hoist, a water tank, and the appropriate Test Adapter Plate and Oring. | 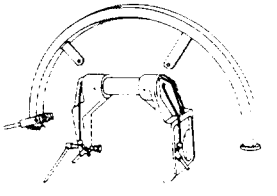 |
| 3375070 | **Water Test Adapter Plate**<br>Check for coolant leaks in the cylinder head. Use with Part No. ST-1012 Hydrostatic Tester. | 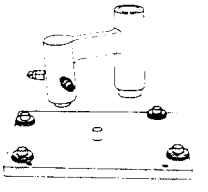 |
| 3375071 | **O-ring, Water Test Adapter Plate**<br>Check for coolant leaks in the cylinder head. Use with Part No. 3375070 Adapter Plate. | |
| 3376015 | **Universal Liner Puller**<br>Remove cylinder liner from engine. | 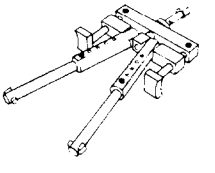 |
| 3375422 | **Liner Installation Tool**<br>Install cylinder liner in engine. | 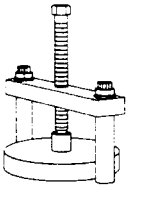 |

| Tool No. | Tool Description | Tool Illustration |
|---|---|---|
| 3375432 | **Crack Detection Kit**<br>Check for cracks in any engine component. Contains Cleaner, Developer, and Penetrant. | 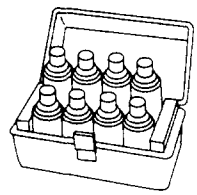 |
| 3376944 | **Cylinder Liner Clamps**<br>Hold cylinder liner in block when checking cylinder liner protrusion. Use with a cylinder head capscrew. | 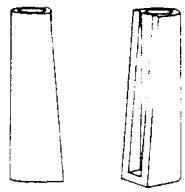 |
| 3376220 | **Gauge Block**<br>Measure cylinder liner counterbore ledge angle. | 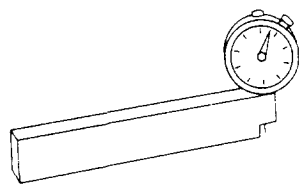 |
| ST-1232 | **Drill Ream Fixture**<br>Machine dowel hole to install oversize dowels in cylinder block and flywheel housing. Use with a drill, reamer, and the appropriate dirll/ream bushing set. | 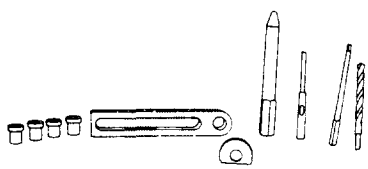 |
| ST-1134 | **Dowel Pin Extractor**<br>Remove dowel pins and crosshead guides. | |
| 3377132 | **Cummins Sealant**<br>Used to prevent coolant or oil leaks. This is a one part Room Temperature Vulcanizing (RTV) silicone rubber, adhesive, and sealant material having high heat and oil resistance and low compression set. | 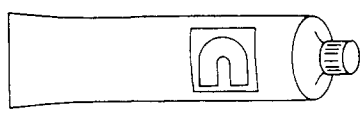 |
| ST-1286 | **Lifting Hook**<br>Attach a lifting fixture to the engine to allow the engine to be lifted. | |
| 3376879 | **Lifting Hook**<br>Attach a lifting fixture to the engine to allow the engine to be lifted. This tool does not require a rocker lever cover with top mounted breather to be removed. | |

| Tool No. | Tool Description | Tool Illustration |
|---|---|---|
| 3375272 | **Engine Support Bracket Kit**<br>Support the front of the engine to allow the front support or oil pan adapter to be removed. | 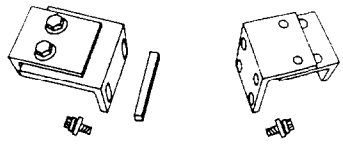 |
| 3375522 | **Injection Timing Tool**<br>Check injection timing. The timing fixture is designed to determine the push tube travel in relation to the piston travel. | 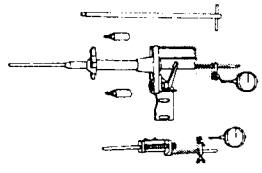 |
| 3376891 | **Flourescent Tracer**<br>Put in engine oil or fuel to check for leaks. | 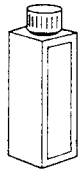 |
| 3377253 | **Blacklight, A.C.**<br>Use with Part No. 3376891 to check for oil or fuel leaks. Requires an A.C. voltage power supply. | 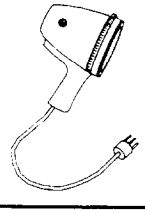 |
| 3377394 | **Blacklight, D.C.**<br>Use with Part No. 3376891 to check for oil or fuel leaks. Requires a D.C. voltage power supply. | 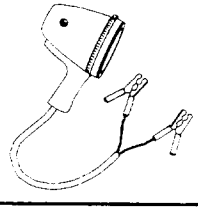 |
| 3375784 | **Light Duty Puller Kit**<br>Remove small bushings, oil seals, and bearings. | 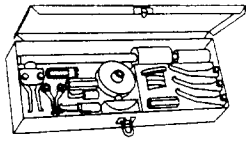 |
| ST-1311 | **Oil Seal Remover/Installer**<br>Remove small bushings, oil seals, and bearings. | 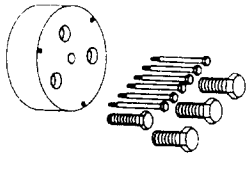 |
| 3375004 | **Injector and Valve Adjustment Kit**<br>Adjust the injectors and valves. Use with Part No. 3376870 Dial Indicator Extension on engines that contain STC. | 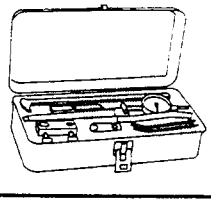 |

| Tool No. | Tool Description | Tool Illustration |
|---|---|---|
| 3376870 | **Dial Indicator Extension**<br>Check and adjust Injector travel on engines that contain STC. Use with Part No. 3375004 Injector and Valve Adjustment Kit. | 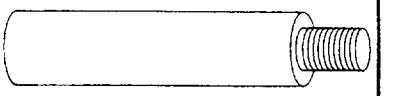 |
| ST-669 | **Torque Wrench Adapter**<br>Hold the rocker lever or crosshead adjusting screw while tightening the locknut. | 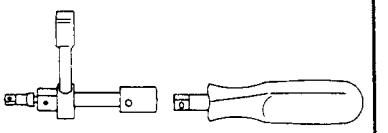 |
| 3376869 | **Rocker Lever Actuator**<br>Depress the injector rocker lever to check or set injector travel. | |
| | | |
| | | |
| | | |
| | | |
| | | |

# General Information (07-02)

The base engine components chapter consist of the removal, cleaning, inspection, testing and assembly of all internal and external components not previously covered in the troubleshooting and repair of the various engine systems.

The rebuild of these components are not covered in this chapter. Refer to the K19 Shop Manual for rebuild instructions.

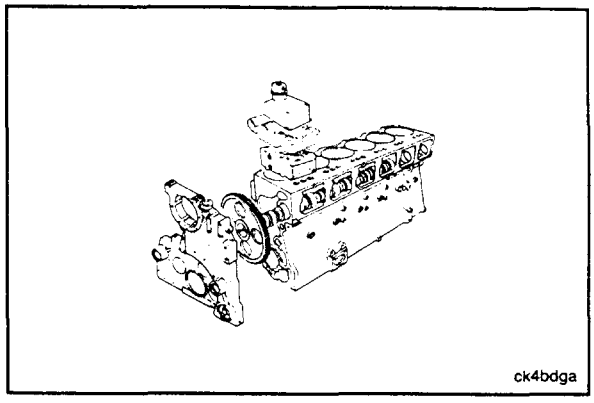


# Crankcase Gas (Blowby) - Check (07-03)

**Note:** Excessive blowby indicates an air compressor, a fan clutch, a turbocharger, or an engine malfunction, allowing combustions gases or air to enter the crankcase and build a pressure higher than normal.

This procedure describes how to measure crankcase pressure and how to determine the component which is malfunctioning.

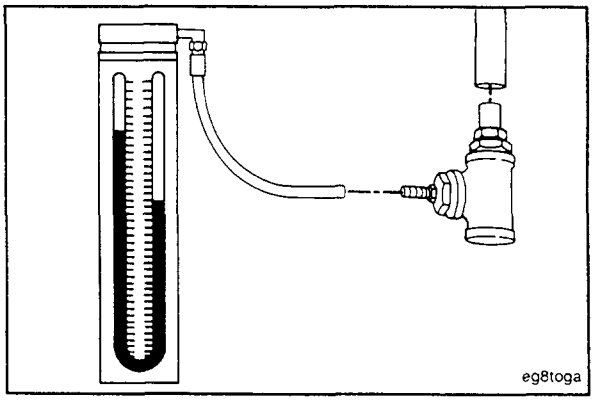


1. Use one of the three blowby service tools and a manometer. Minimum gauge capacity is 1270 mm-H2O [50 in-H2O].

   The engine blowby tools are similar in design. The difference between the tools is in the size of the orifice.

| Blowby Tool | | Orifice Size |
|---|---|---|
| Part No. | mm | in |
| 3375788 | 7.67 | 0.302 |
| 3377143 | 9.0 | 0.354 |
| 3377471 | 10.3 | 0.406 |

Use a length of hose (1) to attach the blowby tool to one of the crankcase breathers.

Plug all of the other breathers.

Attach a manometer to the location shown (2).

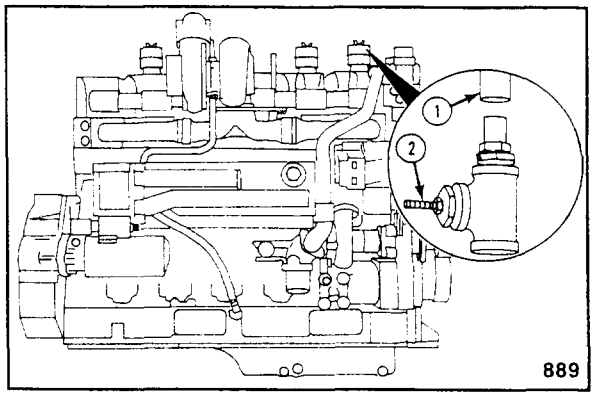

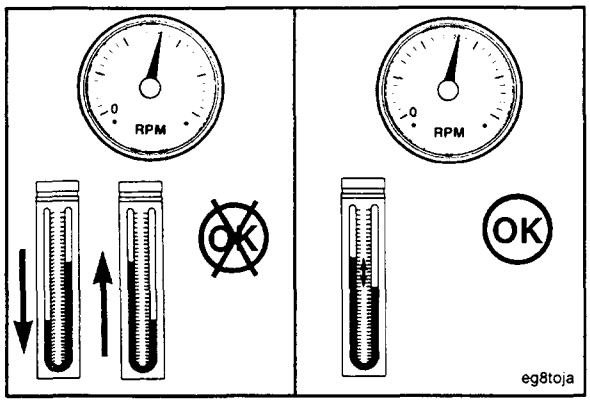


Operate the engine at rated RPM and full load (wide open throttle) until a steady reading is obtained.

Compare the blowby readings to previous readings on the engine. If previous readings for the engine are not available, compare the blowby reading to new engine specifications.

**Note:** A sudden increase in blowby indicates a problem. A gradual increase over a period of time is normal (due to wear of internal engine components).

**Specifications (New Engines)**

**Engine Blowby 7.67mm [0.302in] Orifice**

| Engine | RPM | mm $H_2O$ | [in $H_2O$] |
|---|---|---|---|
| KTTA | all ratings | 508 | [20] |
| KTA | 2000 and above | 355 | [14] |
| KTA | 1200 to 1900 | 305 | [12] |
| KT | 2000 and above | 254 | [10] |
| KT | 1500 to 1900 | 203 | [8] |
| **Engine Blowby 9.0mm [0.354in] Orifice** | | | |
| KTTA | all ratings | 229 | [9] |
| KTA | 2000 and above | 203 | [8] |
| KTA | 1200 to 1900 | 178 | [7] |
| KT | 2000 and above | 152 | [6] |
| KT | 1500 to 1900 | 127 | [5] |
| **Engine Blowby 10.3mm [0.406in] Orifice** | | | |
| KTTA | all ratings | 127 | [5] |

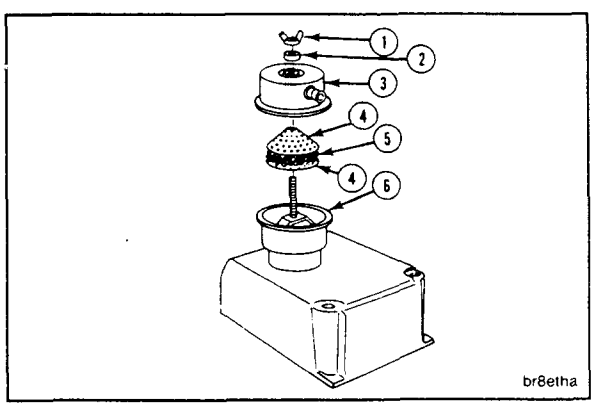


If the blowby is higher than normal, check the crankcase breathers and breather tubes to see if they are plugged. Refer to Procedure 02-13.

Check the engine oil level. If the level is too high it can cause a higher than normal crankcase pressure.

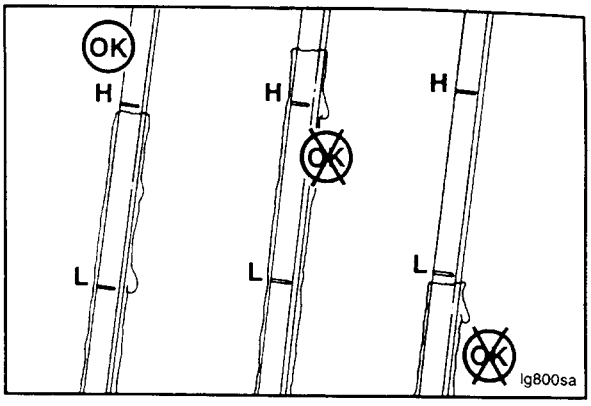


Disconnect the air line from the fan clutch. Check the blowby again to see if compressed air leakage from the fan clutch is causing the high crankcase pressure.

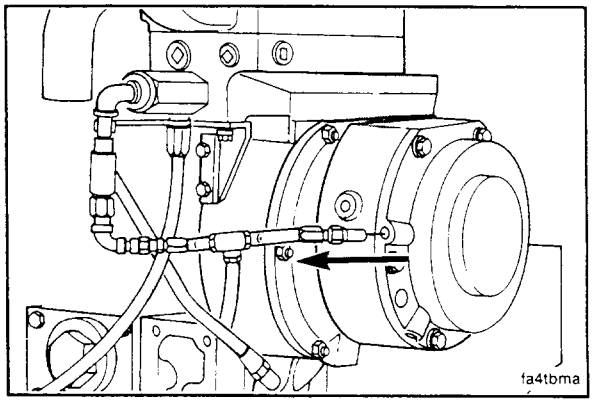


Isolate the turbocharger(s) to determine if the high crankcase pressure is due to seal leakage in the turbocharger. Disconnect the turbocharger drain line from the hand hole cover. For KTTA engines, disconnect only the drain line from the high stage turbocharger.

Install a hose assembly with the two shutoff valves arranged as shown. Place the other hose in an 8 to 19 liter [2 to 5 gallon] bucket.

**Note:** The valves must have a minimum inside diameter of 19 mm [0.75 inch].

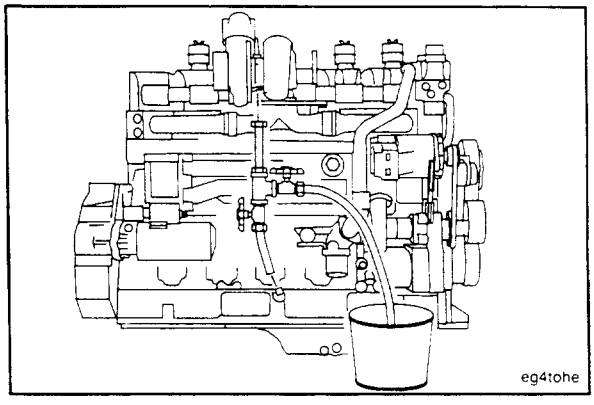


Check the oil level. The oil must be at the "High" mark on the dipstick.

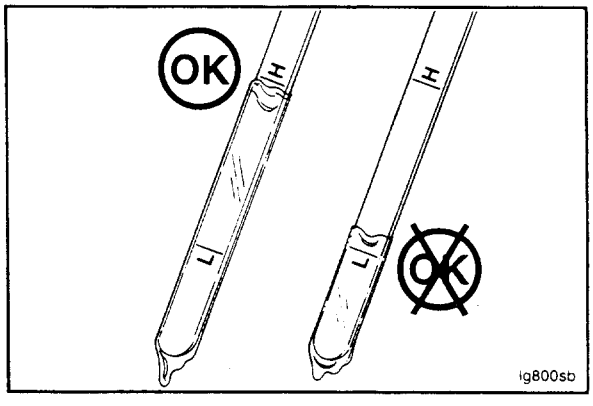

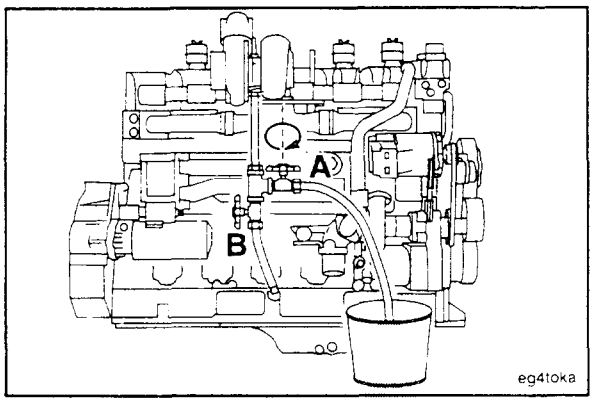


Close the valve (A) that allows the oil to drain to the bucket.

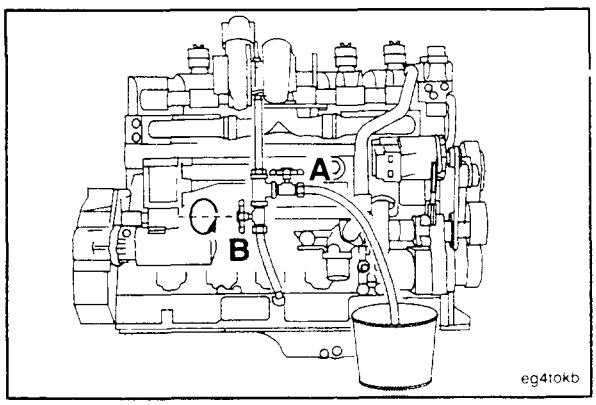


Open the valve (B) that allows the oil to drain into the engine.

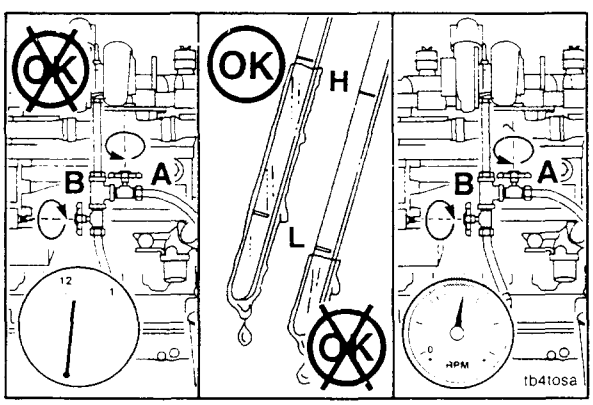


Operate the engine at rated speed

**Caution: Do not operate the engine with valve "A" open and valve "B" closed for more than 1 minute. Operation for more than 1 minute can result in severe engine damage.**

Continue operating at rated speed and load. Open valve "A" and close valve "B". Record the blowby reading.

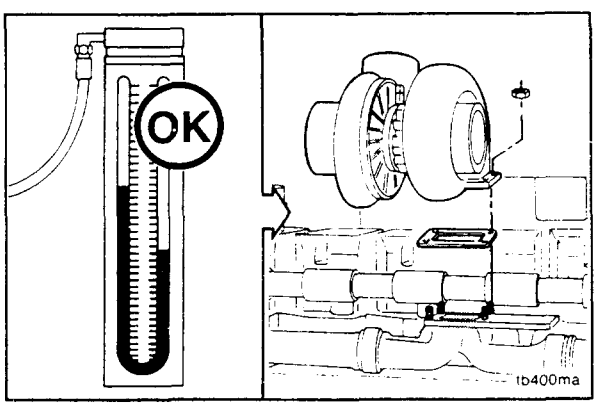


Compare the value to the original reading. If the blowby is now acceptable, replace the turbocharger. Refer to Procedure 03-14 (KTTA) or 03-13 (KT/KTA).

Isolate the air compressor to determine if it is malfunctioning and causing the high blowby pressure.

Relieve the air pressure on the first air tank in the system after the air compressor (wet tank).

Disconnect the air inlet and outlet connections. Plug the intake manifold or air piping where the inlet connection was removed from.

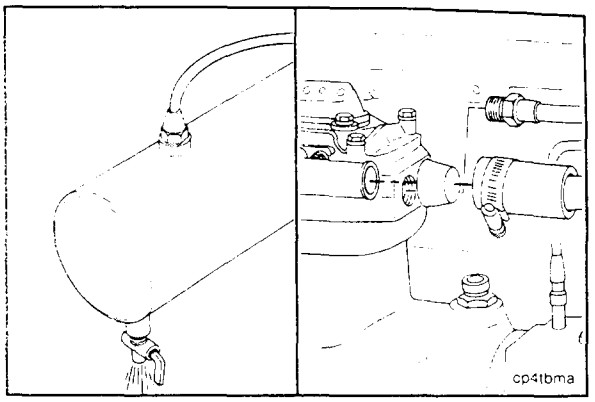


Operate the engine at rated speed and full load (wide open throttle) until a steady blowby reading is obtained.

Compare the blowby readings to the previous value. If the blowby is now satisfactory, replace the air compressor. Refer to Procedure 04-15 or 04-16.

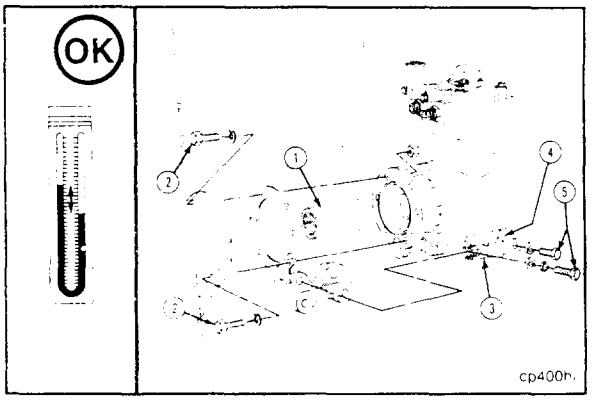


A sudden increase in blowby or a high reading that is not steady indicates that there is internal damage in the engine. To determine which cylinder is at fault, refer to Procedure 07-13.

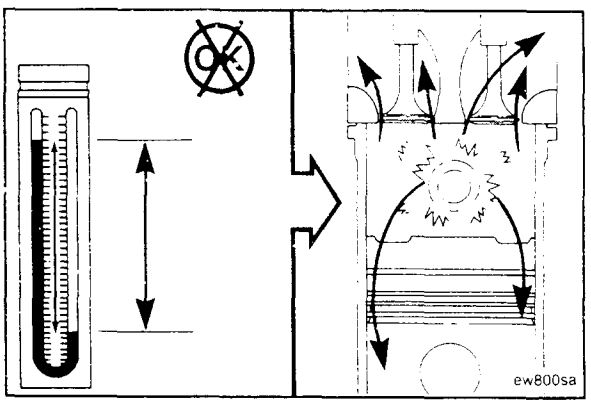


## Rocker Lever Cover - Replace (07-04)

### Remove

1. Remove the two retaining straps (18). Loosen the hose clamps (16) and (17).

   Remove the air transfer pipe (14). Remove and discard the o-rings (12) and (13). Remove and discard the dust seal (15).

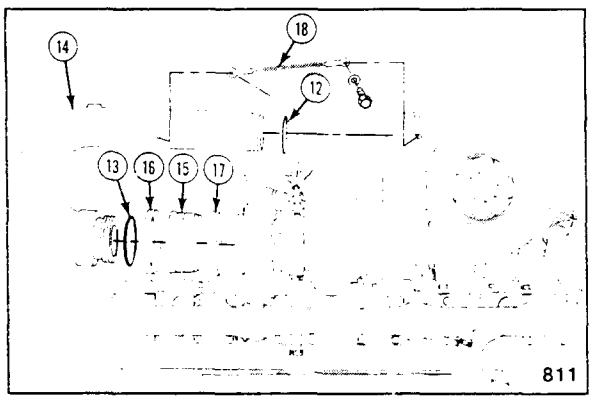

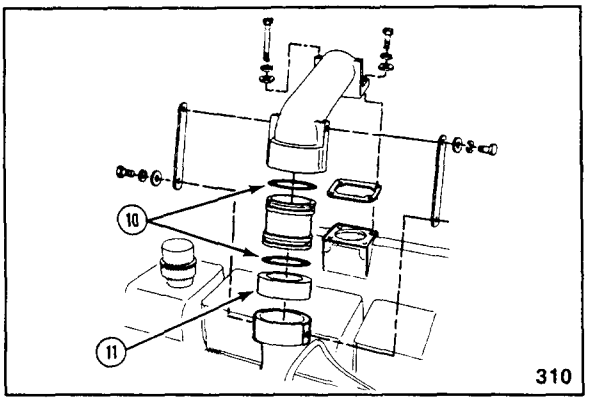


2. Remove the four mounting capscrews at the intake manifold.
3. Loosen the hose clamps and remove the air crossover (hose connection design).
4. Remove the retainer straps (o-ring connection design - shown). Remove the air crossover. Discard the o-rings (10) and the dust seal (11).

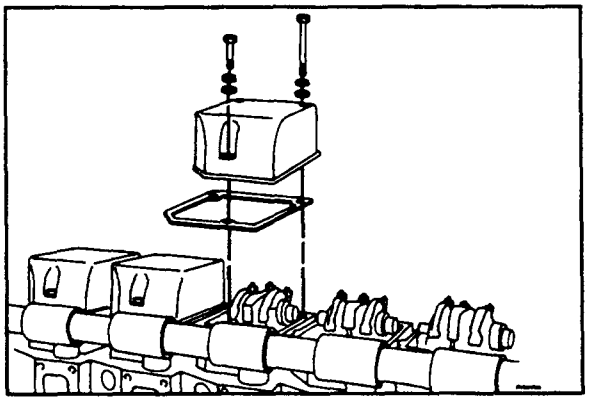

**Note:** Crankcase breathers can be mounted in any cylinder location. Record the number of breathers and there correct location, before removing.

5. Remove the rocker lever cover and discard the gasket.

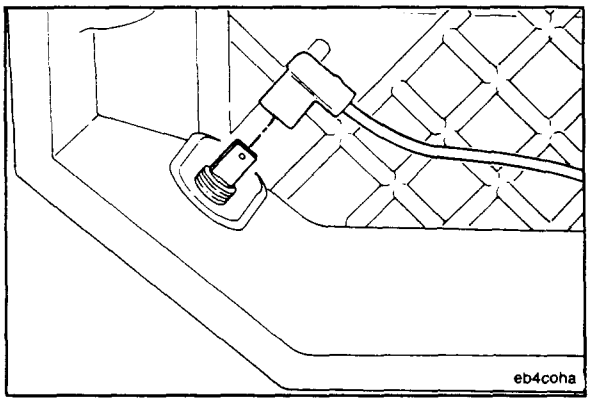


**Note:** Disconnect the solenoid wire from inside the cover on engines equipped with an engine brake.

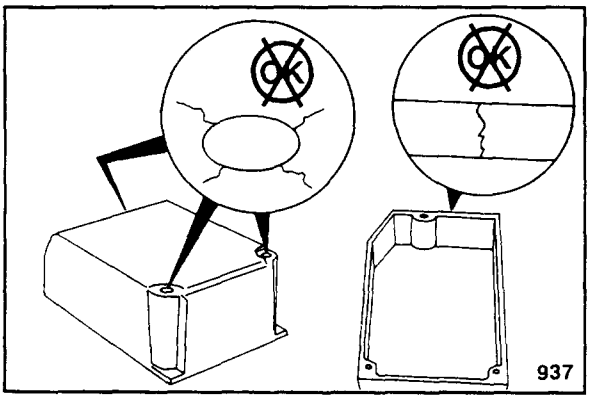


## Check For Reuse

1. Clean the rocker lever cover with a solvent that will not harm aluminum.
2. Check the cover for cracks.

## Install

**Note:** If the engine has an engine brake, connect the solenoid wire to the terminal inside the cover.

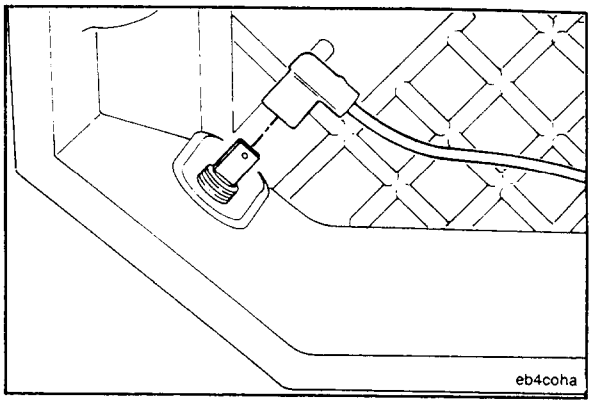


**Caution: Gasket cement will prevent the gasket from sealing properly.**

1. Install the gasket, rocker lever cover, washers, and capscrews. Tighten the short capscrew first. Tighten all the capscrews to 45 N•m [35 ft-lb].

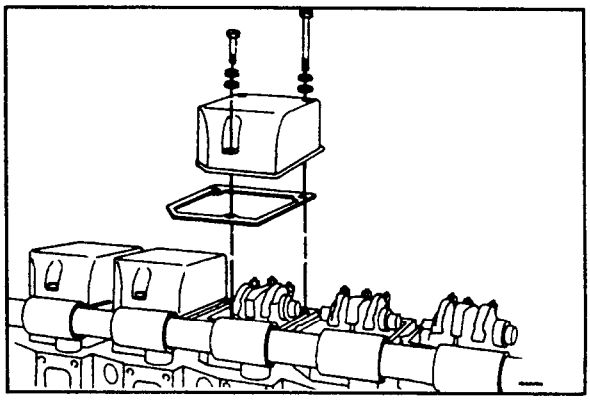

2. Install air crossover (Hose Design)
3. Install the hose (11) and the two clamps (10) on the crossover.
4. Install the gasket, air crossover and capscrews. Tighten the capscrews to 40 N•m [30 ft-lb].
5. Slide the hose down over the turbocharger. Position the clamps and tighten to 8.4 N•m [75 in-lb].

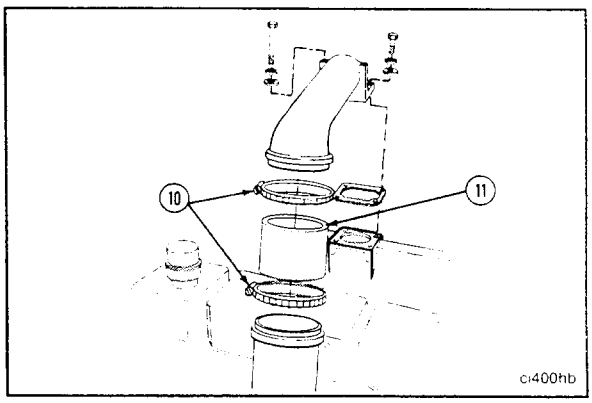


6. Install air crossover (o-ring design)
7. Lubricate the o-rings (10) with vegetable oil and install them on the tube.
8. Install the tube in the crossover. Install the dust seal (11) on the tube.
9. Install the gasket, crossover and capscrews. Tighten the capscrews to 40 N•m [30 ft-lb].
10. Install the retainer straps, washers and capscrews. Tighten the capscrews to 20 N•m [15 ft-lb].

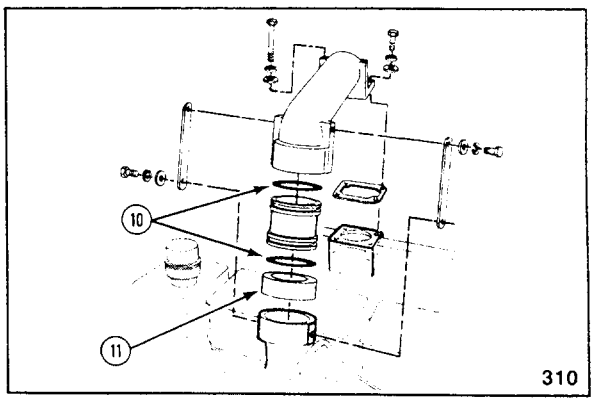

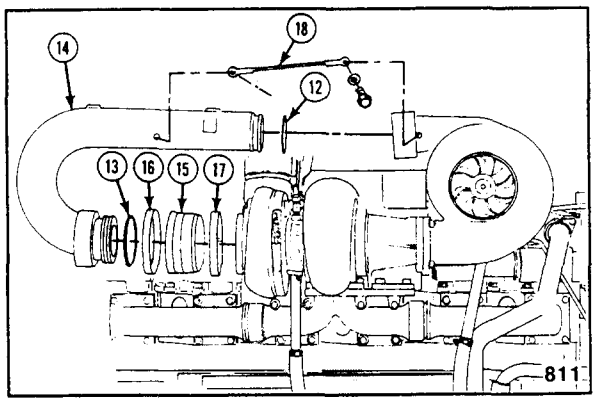

11. Slide the dust seal (15), and clamps (16) on the tube (14).
12. Lubricate the o-rings with vegetable oil and install them on the tube (14).
13. Install the tube into the turbochargers. Put the dust seal and clamps in position. Tighten the clamps to 8.4 N•m [75 in-lb].
14. Install the two adjusting links (18), washers, and capscrews. Tighten the capscrews to 20 N•m [15 ft-lb].

# Check/Adjust Valves And Injectors (07-05)

## General Information

1. Engine firing order 1-5-3-6-2-4.
2. Cylinders are numbered from the front gear cover end of the engine.
3. Two crankshaft revolutions are required to adjust all of the valves and the injectors.
4. One pair of valves and one injector are adjusted at each pulley index mark before rotating the engine to the next index mark.
5. The valves and the injectors on the same cylinder are not adjusted at the same mark.
6. Each cylinder has three rocker levers. The lever nearest to the front of the engine is the exhaust lever.

   The following chart is useful for recording values.

### Inspection Report for Valve Lash and Injector Travel

| Work Sequence | VS Mark and Valves to be Set | Intake | Exhaust | Reset (Y/N) | Crosshead (OK/ Reset) | Cylinder No. | Injector Travel | Reset (Y/N) |
|---|---|---|---|---|---|---|---|---|
| ____ | C-1 | _____ | _____ | ____ | ____ | 5 | _____ | ____ |
| ____ | A-5 | _____ | _____ | ____ | ____ | 3 | _____ | ____ |
| ____ | B-3 | _____ | _____ | ____ | ____ | 6 | _____ | ____ |
| ____ | C-6 | _____ | _____ | ____ | ____ | 2 | _____ | ____ |
| ____ | A-2 | _____ | _____ | ____ | ____ | 4 | _____ | ____ |
| ____ | B-4 | _____ | _____ | ____ | ____ | 1 | _____ | ____ |

Customer:_____

Location:_____

Unit No. _____ Hrs. _____ Date: _____

Job No. _____

Engine Model No. _____ Engine Serial No. _____

Type of inspection: (Failure, Routine, Complaint)_____

_____

Inspection notes:_____

_____

_____

_____

**This page can be copied for your convenience.**

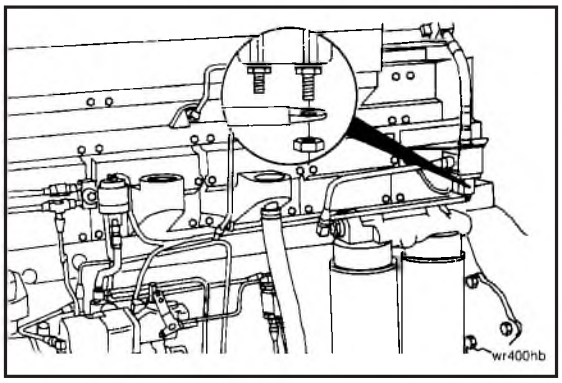


## Check/Adjust Valves And Injectors

1. On engines with STC, remove the wire from the terminal on the oil control valve. This will prevent the engine from going to advance timing.

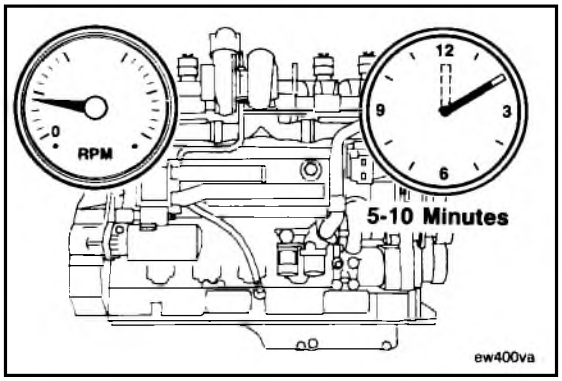


2. Operate the engine at high idle for 5 minutes (in normal timing mode). This will allow all of the oil to pump out of the STC tappets so a correct injector adjustment can be made.

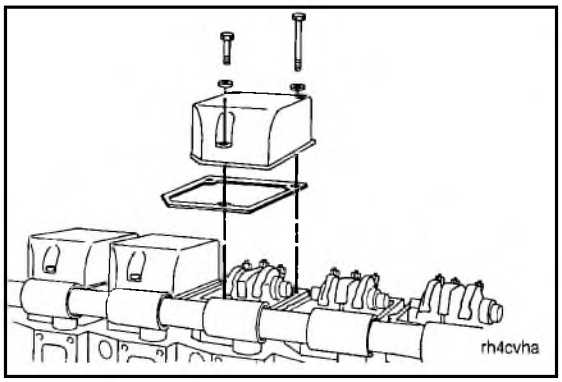


3. Shut the engine off. Remove the rocker lever cover and all related components. Refer to Procedure 07-04.

**Note:** Some older engines have different index marks than 'A', 'B',and 'C'. On older engines,

- 1-6 VS is the same as 'A'.
- 2-5 VS is the same as 'B'.
- 3-4 VS is the same as 'C'.

**Note:** VS represents the valve set. Ignore any 1-6 TC mark during adjustment.

**Note:** The barring device shaft turns approximately two revolutions before the engine begins to turn. The device will not turn the engine opposite the direction of normal rotation.

4. Push the shaft in and turn the barring device until the 'A' mark on the pulley is aligned with the mark that is cast into the boss for the accessory drive seal on the front gear cover.

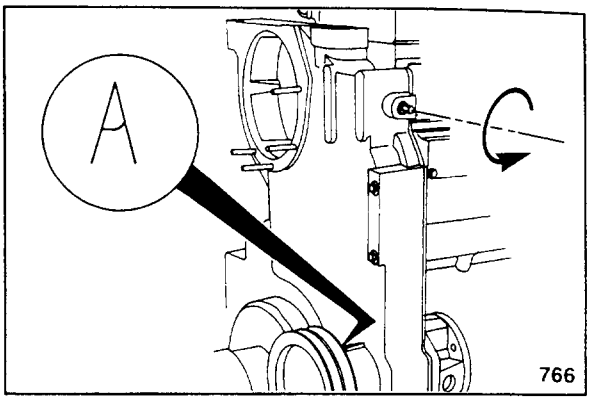


5. On engines with a two-piece front cover,
   - remove the clip,
   - push the shaft in to engage the gears,
   - rotate the device shaft counterclockwise to turn the engine in the direction of normal rotation.

   The alignment mark is also on the boss for the accessory drive seal.

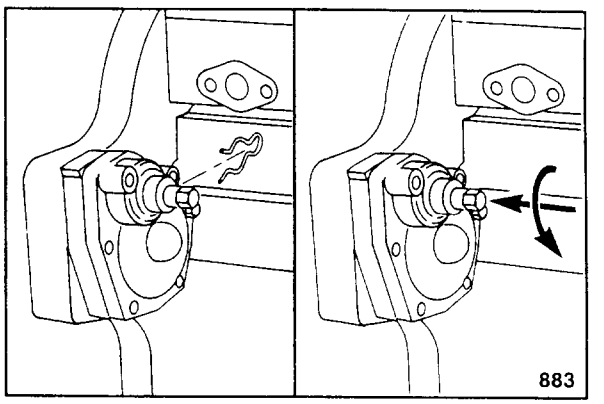


## Determine The Cylinder In Position For Valve Set

1. The valves will be adjusted on the cylinder that has all the valves closed. Use the table to determine the cylinders to check for valve position.

| If Valve Set Mark Is: | Check Valve Position On: |
|---|---|
| A | 2,5 |
| B | 3,4 |
| C | 1,6 |

922

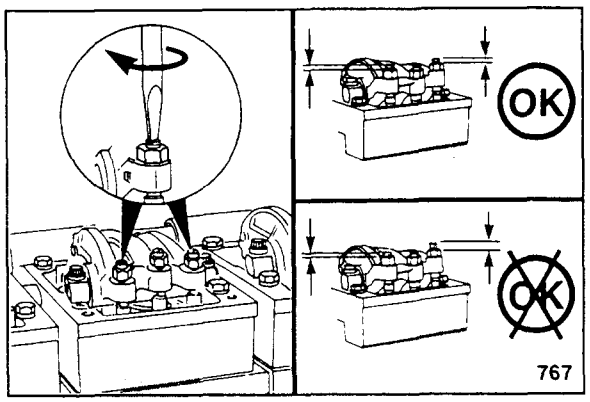


2. If the rocker lever assemblies have been removed, use this step to determine the cylinder to set.

**Note:** All adjusting screws must be loose on all cylinders, and the push rod must remain in alignment.

**Note:** Perform this step on both cylinders to be checked.

Hold both rocker levers against the crossheads. Turn the adjusting screws until they touch the push rods. Turn the locknuts until they touch the levers.

Compare the height of the adjusting screws above the locknut. The cylinder that the adjusting screws are the same height is ready for valve adjustment.

**Note:** The push rods will be the same height above the top of the rocker lever housing on the cylinder ready for valve adjustment.

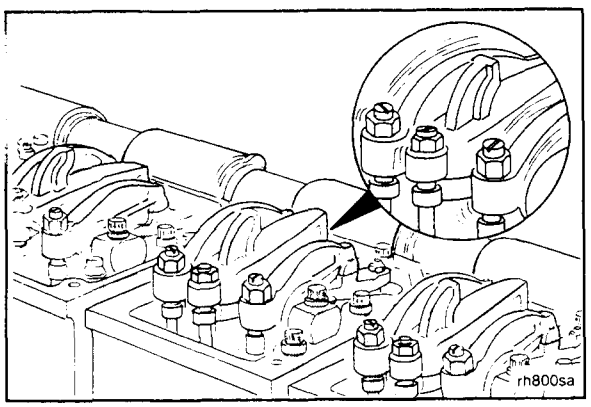


3. If the rocker levers have not been removed, wiggle the valve rocker levers on the two cylinders in question. Set the valves on the cylinder where both levers feel loose.

| | Closed On | V | I |
|---|---|---|---|
| A | 5 | 5 | 3 |
| B | 3 | 3 | 6 |
| C | 6 | 6 | 2 |
| A | 2 | 2 | 4 |
| B | 4 | 4 | 1 |
| C | 1 | 1 | 5 |

768

4. Use the chart to determine the injector that is ready to adjust.

**Note:** Adjustment can begin on any valve set mark.

In our example, assume the 'A' mark is aligned and the adjusting screw height indicates that the valves on cylinder no. 2 are closed (ready to set). The chart shows the injector on cylinder no. 4 is ready to adjust.

5. After the adjustment, bar the engine to the 'B' set mark. Adjust the valves on cylinder no.4 and adjust the injector on cylinder no. 1.

## Adjust the Crossheads

**Note:** Crosshead adjustment **must always** be made before attempting to adjust the valves.

Adjust the crossheads on the cylinder that has both valves closed.

1. Loosen the crosshead adjusting screw locknuts on the intake and exhaust valve crossheads.

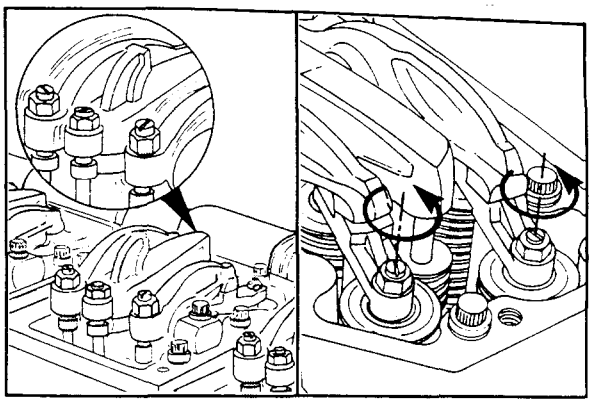

**Note:** Use the following procedure to adjust both the intake and the exhaust crossheads:

2. Turn the adjusting screw out at least one turn.
3. Hold the crosshead down against its mating valve stems.
4. Turn the adjusting screw in until it touches the top of the valve stem but does **not** raise the crosshead.

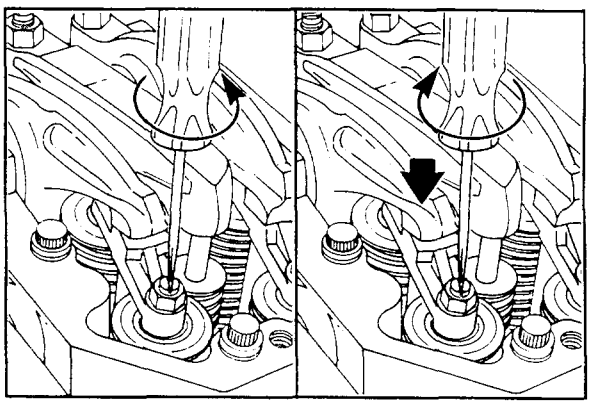

5. Hold the adjusting screw in this position. The adjusting screw **must not** turn when the lock nut is tightened to its torque value. Tighten the lock nut. The following torque values are given with and without Part No. ST-669 Torque Wrench Adapter (1):

| | Torque Values | |
|---|---|---|
| | N•m | ft-lb |
| Less Jacobs® Brake: | | |
| (with adapter) | 35 | 25 |
| (less adapter) | 40 | 30 |
| With Jacobs® Brake: | | |
| (with adapter) | 40 | 30 |
| (less adapter) | 45 | 35 |

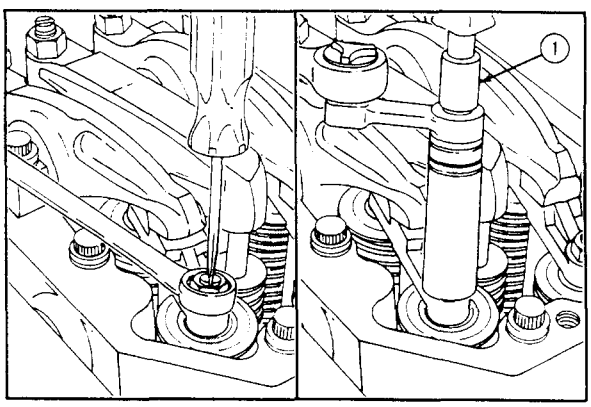


## Adjust The Valves

| Valve Adjustment (Initial Set) | | |
|---|---|---|
| mm | | in |
| 0.69 | Exhaust | 0.027 |
| 0.36 | Intake | 0.014 |

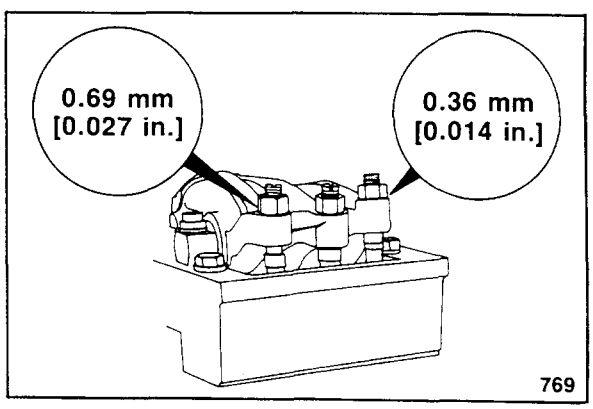

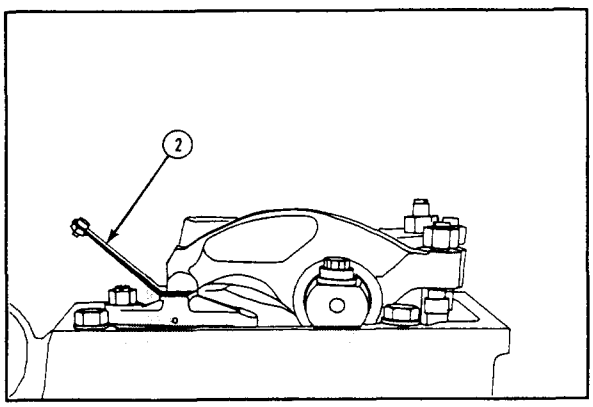


1. Select a feeler gauge for the correct valve lash specification. Insert the gauge (2) between the rocker lever and the crosshead.

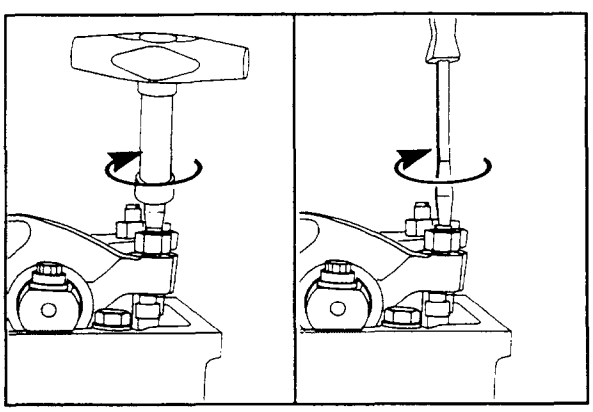

Two different methods for establishing valve lash clearance are described below. Either method can be used; however, the torque wrench method has proven to be the most consistent.

a. **Torque Wrench Method:** Use Part No. 3376592 Inch Pound Torque Wrench and tighten the adjusting screw to 0.68 N•m [6 in-lbs] torque.

b. **Feel Method:** Use a screwdriver and turn the adjusting screw ONLY until the lever touches the feeler gauge.

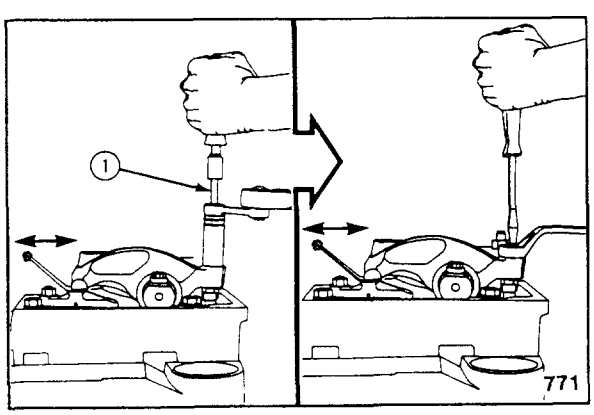


**Note:** The adjusting screw must not turn when the locknut is tightened.

2. Tighten the locknut to the value indicated below.

| | |
|---|---|
| With Torque Wrench Adapter, Part No. ST-669 (1) | 45 N•m [35 ft-lb] |
| Without Adapter | 60 N•m [45 ft-lb] |

The feeler gauge must slide backward and forward with only a slight drag.

3. Attempt to insert a feeler gauge that is 0.03 mm [0.001 inch] thicker. The valve lash is not correct when the thicker gauge will fit.

4. Adjust the slave cylinder clearance on Jacobs Brakes. Refer to Procedure 07-06.

Repeat the adjustment process until the clearance is correct on both the intake and the exhaust valves.

## Adjust The Injector

1. Assemble the parts of an injector and valve adjustment kit (3), Part No. 3375004, or equivalent. Install the adjustment kit on the cylinder to be adjusted as shown. Engines with STC require a Part No. 3376870 Dial Indicator Extension.
2. Adjust the indicator so that the tip is touching the top of the injector plunger.
3. On engines with STC, the tip must touch the tappet as shown. The tip must not touch the rocker lever or retainer ring.
4. Lower the indicator 12.7 mm [0.500 inch] to allow for travel. Lock the indicator support to the post.

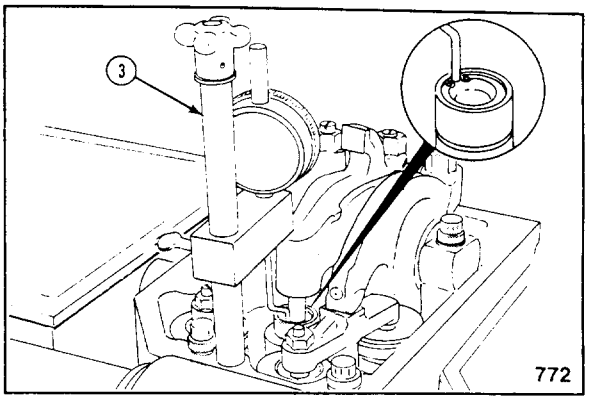


**Warning: The injector plunger is under spring tension. Do not allow the tool to slip. Personal injury can result.**

**Note:** Prevent damage to the indicator by allowing the lever to return slowly.

5. Use a rocker lever actuator, Part No. 3376869, or equivalent. Depress the lever until the injector bottoms two or three times. This will remove fuel and oil from the cup.

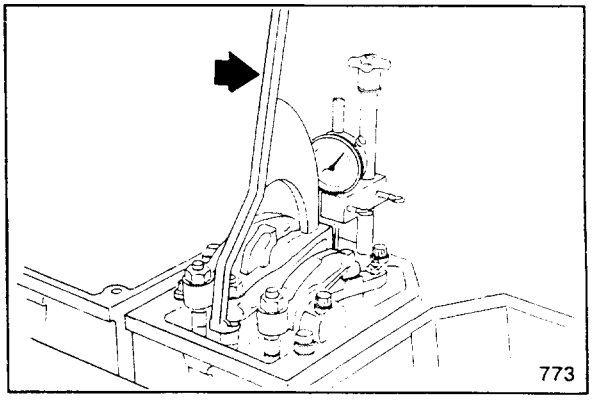


## Check Existing Setting

1. Hold the lever with the injector plunger firmly bottomed in the cup. Set the indicator to "ZERO".

   Raise and lower the lever a few times to confirm the "ZERO".

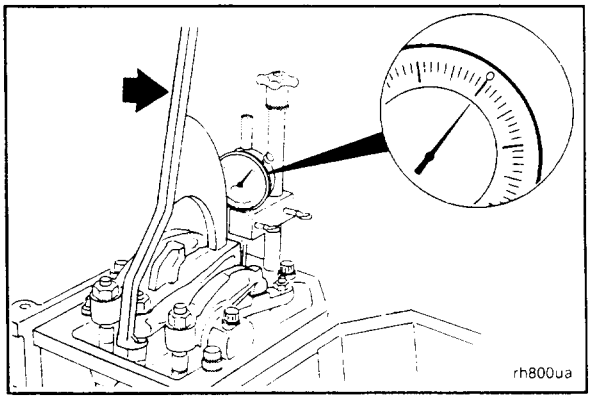


2. Slowly release the lever and observe the travel of the gauge. Press down or tap lightly on the adjusting screw to confirm the reading.

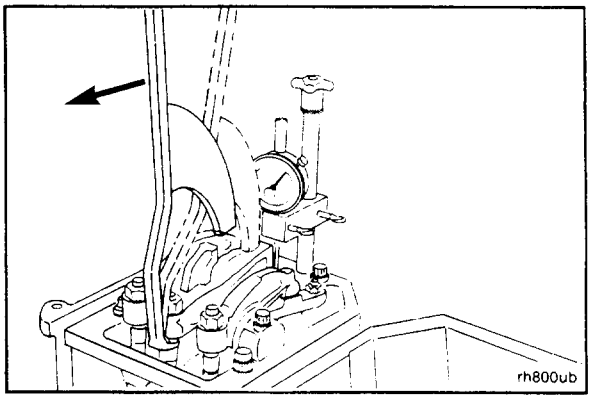

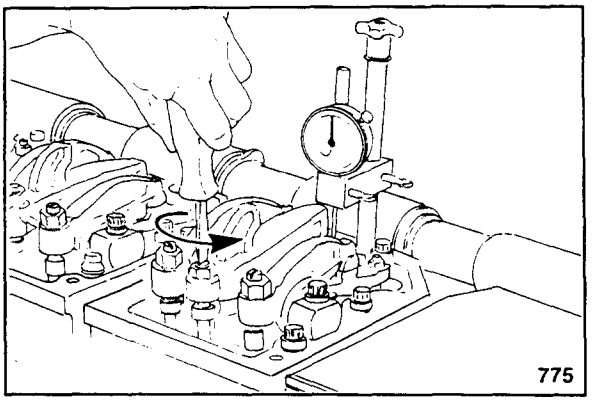


## Reset

1. Turn the adjusting screw until the indicator reads the specified travel.

| Injector Travel Specifications | | |
|---|---|---|
| mm | Model | in |
| 7.72 | Less STC | 0.304 |
| 10.24 | With STC | 0.403 |

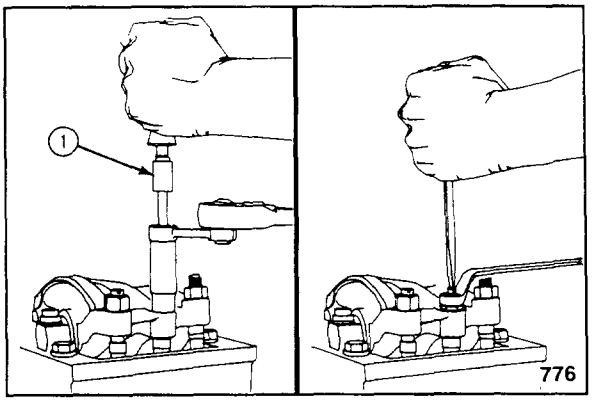


**Note:** The adjusting screw must not turn when the locknut is tightened.

2. Tighten the locknut to the value indicated below.

| | |
|---|---|
| **With** Torque Wrench Adapter, Part No. ST- 669 (1) | 45 N•m 35 ft-lb |
| **Without** Adapter | 60 N•m 45 ft-lb |

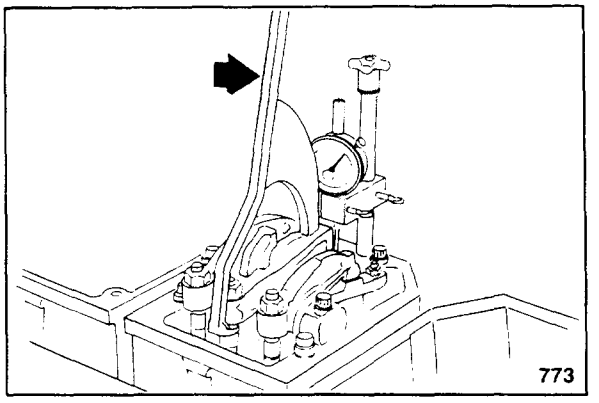


## Check New Setting

**Warning: The injector plunger is under spring tension. Do not allow the tool to slip. Personal injury can result.**

**Note:** Prevent damage to the indicator by allowing the lever to return slowly.

1. Check the injector adjustment. Use the rocker lever actuator. Bottom the injector plunger. Confirm the "ZERO" on the indicator.

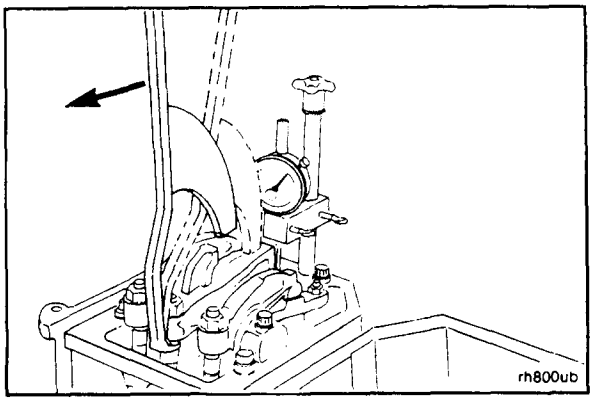


2. Allow the rocker lever to return slowly. Check the injector setting. Repeat the adjustment process if it is not within specification.

3. Rotate the engine. Align the next mark. Adjust the appropriate valves and injectors. Repeat the process to adjust all of the valves and the injectors correctly.

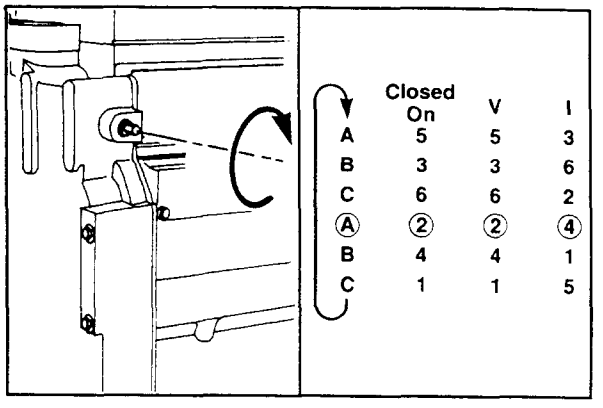


4. Turn the barring device in a clockwise direction to disengage the barring mechanism (worm gear).

**Note:** If the worm gear remains engaged accidently during the engine START, the engine rotation will disengage the parts without damage.

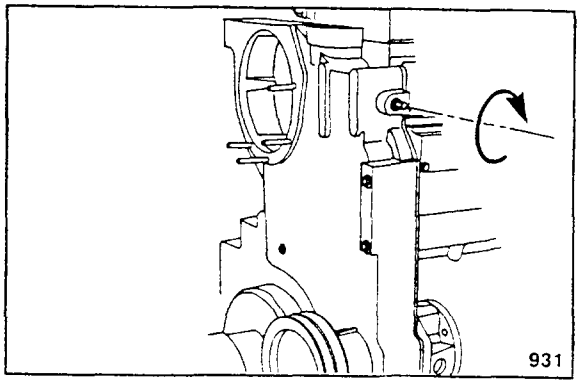


5. On engines with a two-piece cover,
   - pull the shaft out to disengage the gears
   - and install the clip.

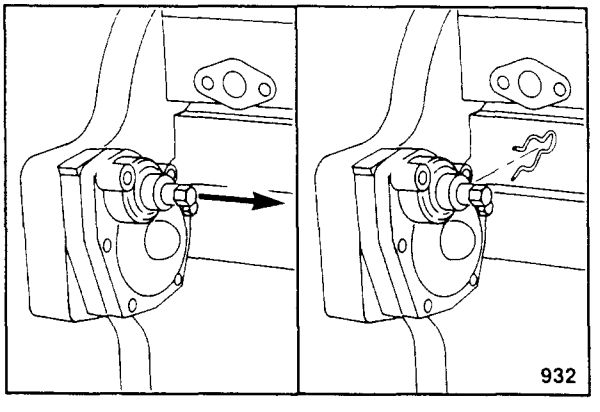


6. Install the rocker lever cover and all related components. Refer to Procedure 07-04.

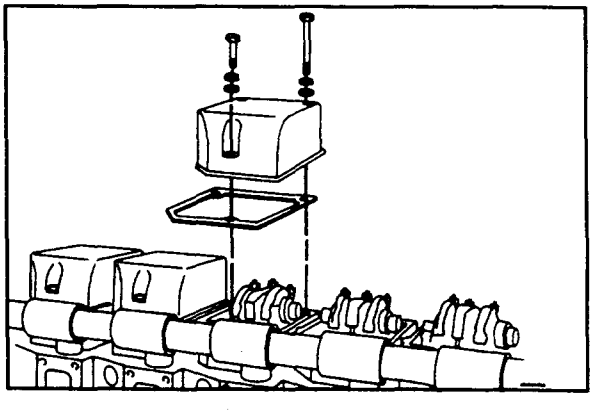

| If Valve Set Mark Is: | Check Valve Position On: |
|---|---|
| A | 2,5 |
| B | 3,4 |
| C | 1,6 |

922

# Jacobs Engine Brake - Adjust (07-06)

1. The slave piston will be adjusted on the cylinder that has all the valves closed.

| | Closed On | V | I |
|---|---|---|---|
| A | 5 | 5 | 3 |
| B | 3 | 3 | 6 |
| C | 6 | 6 | 2 |
| (A) | (2) | (2) | (4) |
| B | 4 | 4 | 1 |
| C | 1 | 1 | 5 |

768

2. If performing an injector and valve adjustment, adjust the Jacobs Engine Brake immediately before adjusting the exhaust valve.

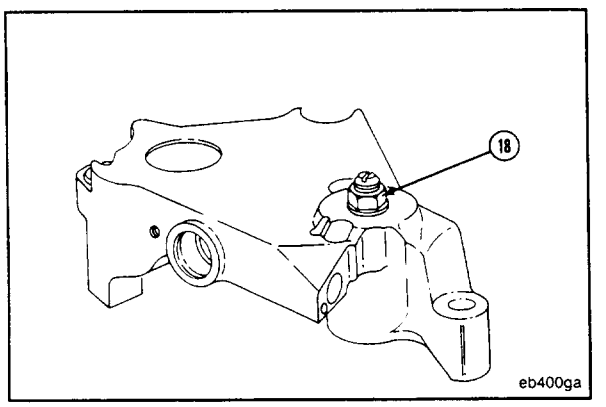


eb400ga

3. The model K-1200 is adjusted by turning the slave piston adjusting screw (18). This adjustment is made when all the valves are closed.

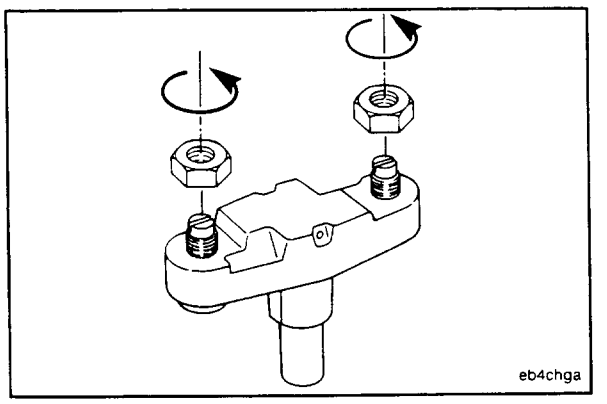

eb4chga

4. The model K-1150 is adjusted by positioning the cross-head in relation to the slave piston. The model K-1150 does not contain a slave adjusting screw.

## Model K-1200 - Adjust

1. Loosen the slave piston adjusting screw locknut, and the adjusting screw.

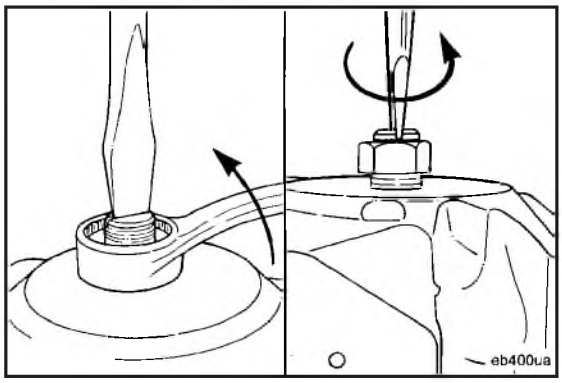


2. Put a 0.46mm [0.018 inch] thick shim between the slave piston feet and the crosshead.

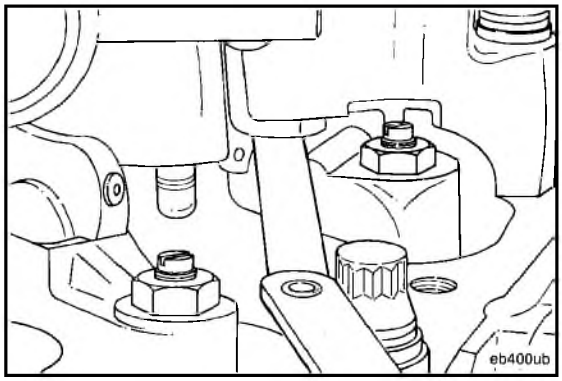


3. Slowly turn the adjusting screw until the slave piston contacts the shim.

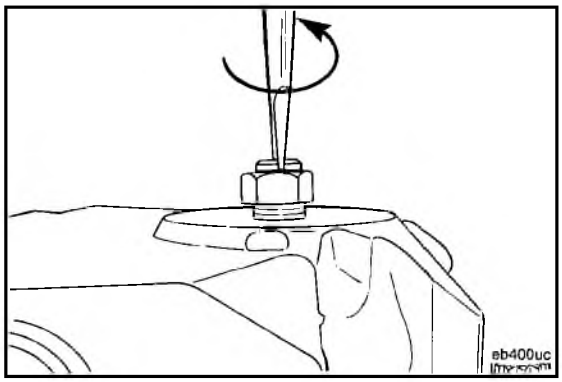


4. Hold the adjusting screw and tighten the locknut to 55N•m [40 ft-lb].

   Proceed to step 5.

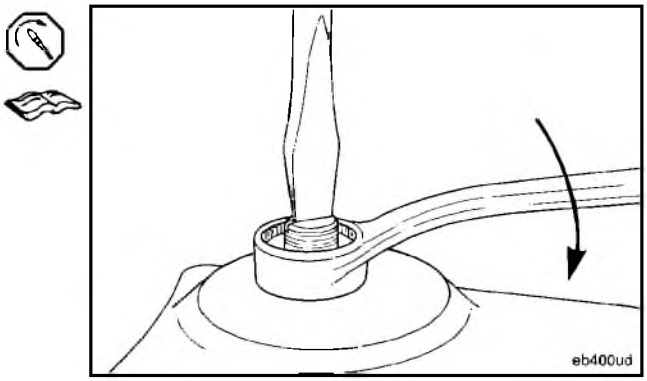

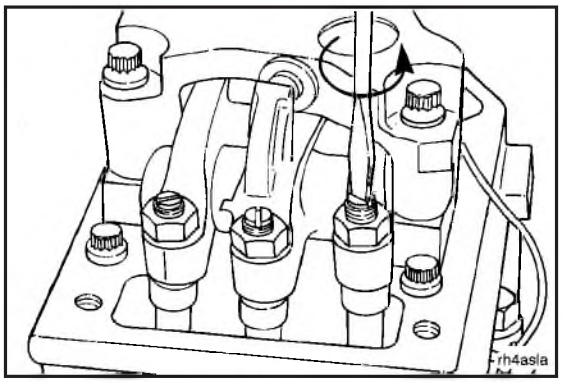


## Model K-1150 - Adjust

1. Loosen the exhaust rocker lever adjusting screw.

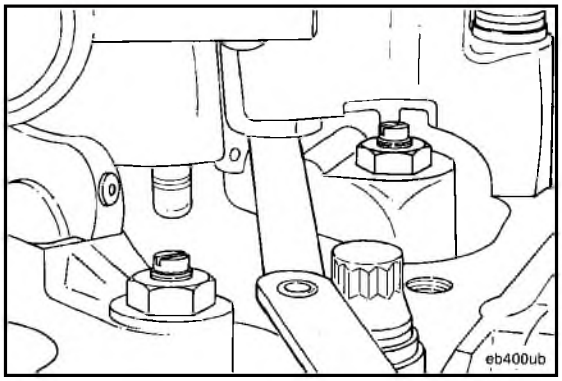


2. Put a 0.46mm [0.018 inch] thick feeler gauge between the slave piston feet and the crosshead.

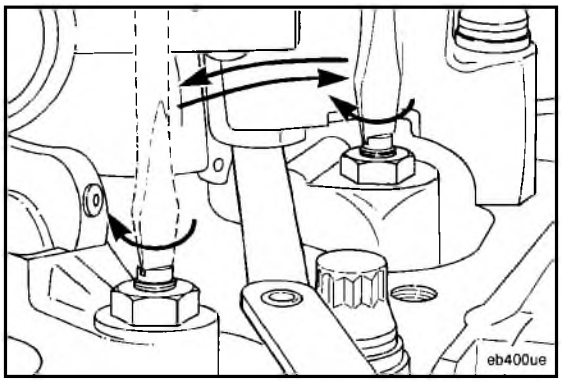


3. Start with the crosshead adjusting screw on the turbocharger side of the engine. Adjust the screws alternately and evenly using 1/8 turns. Adjust the screws until the crosshead and feeler gauge make contact with the slave piston.

**NOTE:** Make sure that the adjusting screw sockets are bottomed on the valve stems.

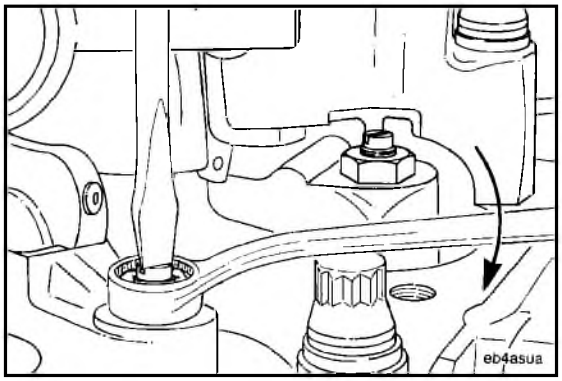

4. Hold the adjusting screw and tighten the locknut to 65 N•m [50 ft-lb].

5. Adjust the valves and injectors if desired. Refer to Procedure 07-05.

**NOTE:** The exhaust valves must be adjusted.

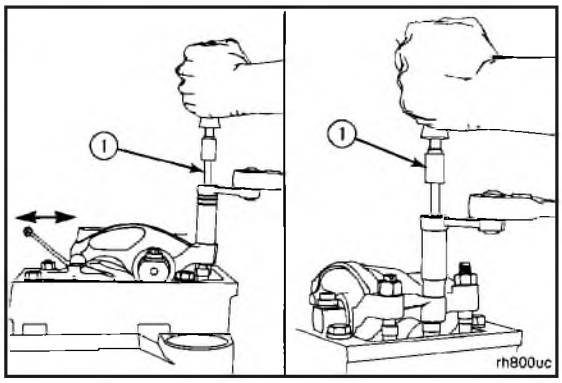


**Caution: Running the engine with the valve covers removed will produce a significant amount of oil splash. To prevent personal injury wear eye protection and stay clear of the engine when it is running at high RPM.**

6. Bleed the brake units. Start the engine and allow it to run for several minutes. Accelerate it to approximately 1800 RPM, release the throttle and then manually depress the solenoid armature. This procedure should be done five to six times to permit the engine oil to fill the brake housing passages.

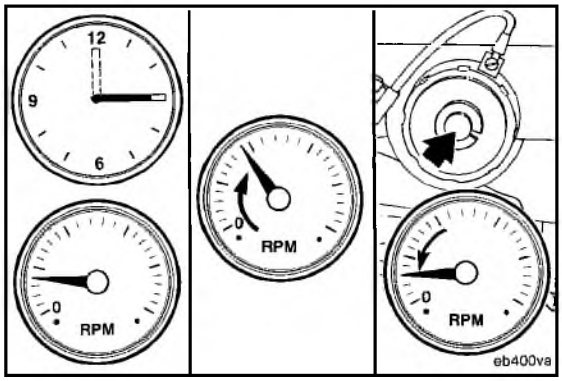


## Jacobs Engine Brake - Replace (07-07)

### Remove

1. Remove the rocker lever cover and all related components. Refer to Procedure 07-04.

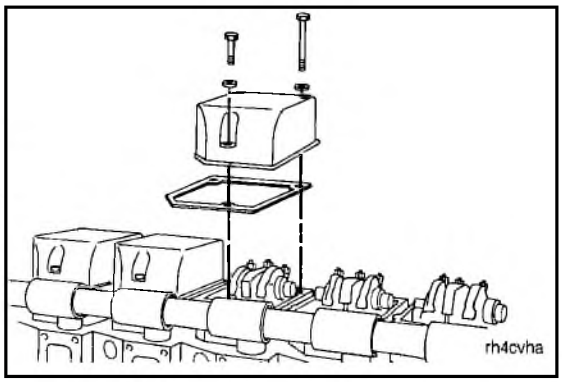


2. Loosen all valve and injector adjusting screw locknuts and back out the adjusting screws one to two turns.

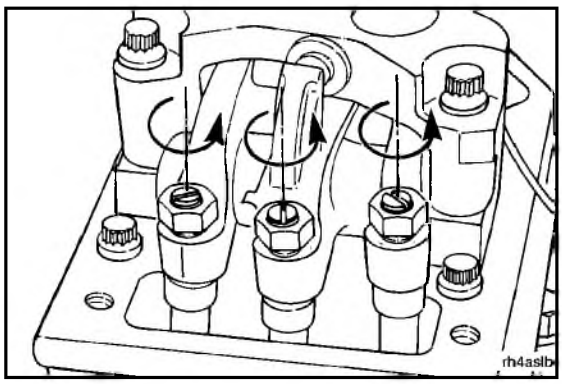

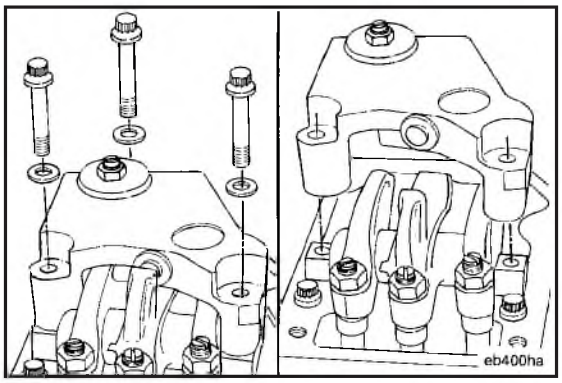


3. Remove the three capscrews and the Jacobs engine brake assembly.

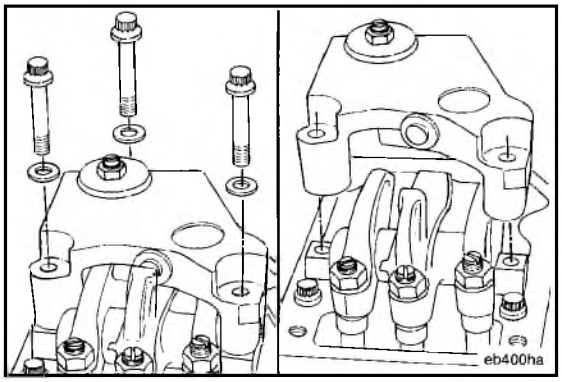


## Install

1. Position the engine brake on the rocker lever housing and install the three washers and capscrews. Tighten the capscrews to 95 N•m [70 ft-lb].

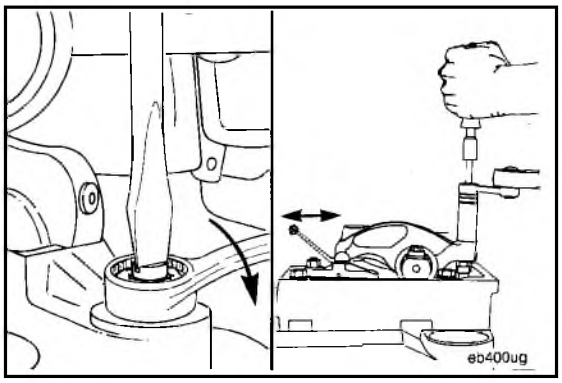


2. Adjust the slave piston travel. Refer to Procedure 07-06.
3. Adjust the valve and injector travel. Refer to Procedure 07-05.

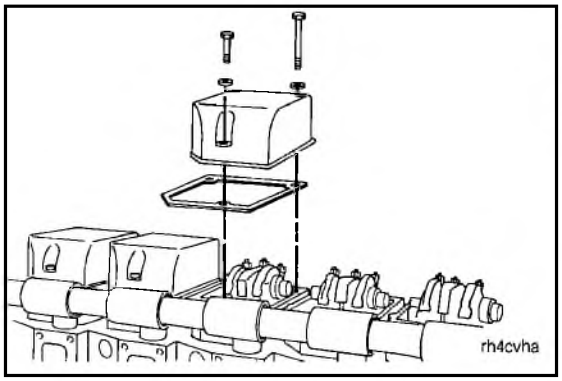


4. Install the rocker lever cover and all related components. Refer to Procedure 07-04.

# Push Rod - Replace (07-08)

## Remove

1. Remove the rocker lever cover. Refer to Procedure 07-04.
2. Remove the Jacobs engine brake. Refer to Procedure 07-07.

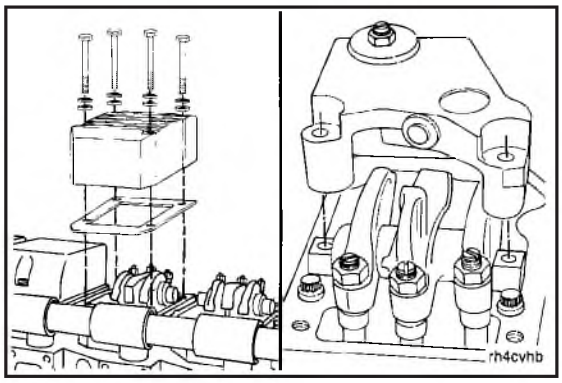


3. Remove the rocker levers and the STC injector link. Refer to Procedure 07-09.

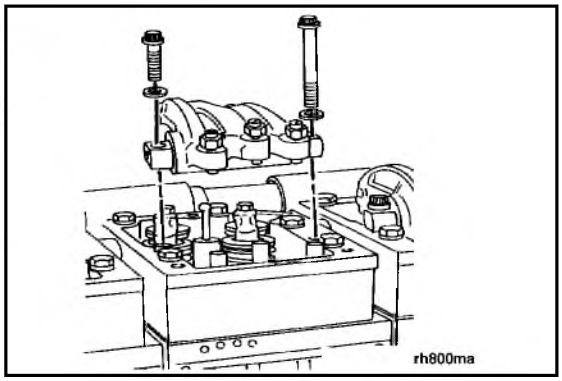


**NOTE:** It is good service practice to mark the push rods so they can be reinstalled in their original location.

4. Remove the push rods and the standard injector link.

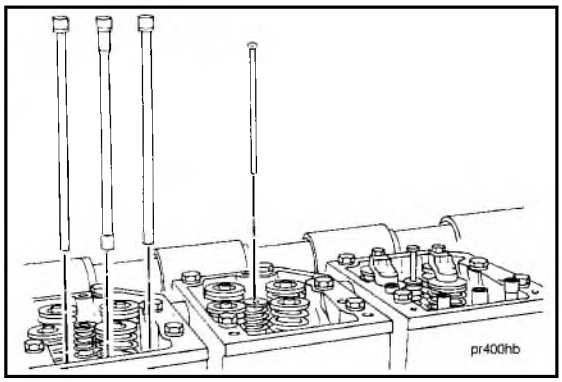


## Check For Reuse

1. Clean and check the push rods. Check to be sure the rod is straight. View the rod while rolling it across a level surface.

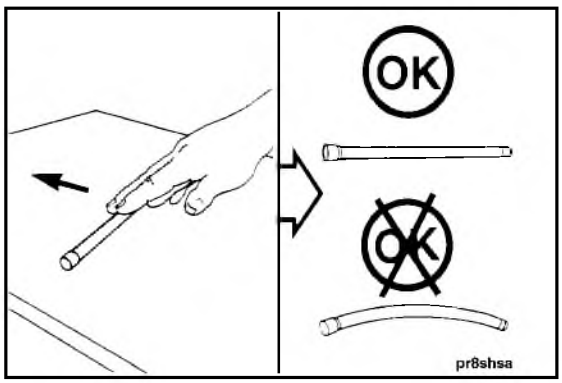

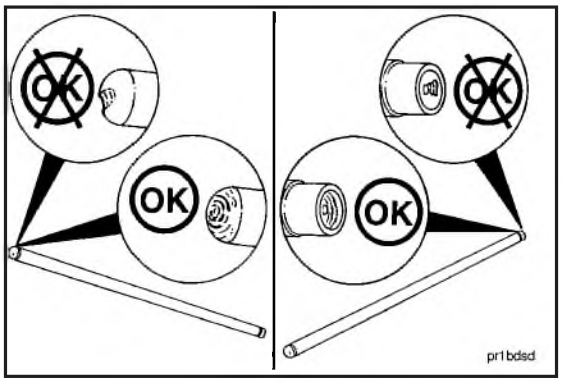


2. Check both ends of the push rods for wear or damage.

**NOTE:** The cam follower socket must be replaced if the push rod is worn or damaged in the area where it contacts the socket. Replace both the rocker lever adjusting screw and the push rod if the socket surface in the rod or on the adjusting screw is damaged.

**NOTE:** A loose socket end retainer on a solid push rod is acceptable for reuse as long as the retainer is not in danger of separating from the rod.

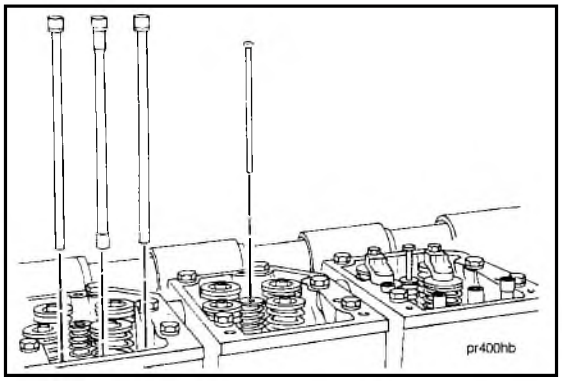


## Install

**NOTE:** The push rods must be seated correctly in the cam followers.

**NOTE:** The injector push rods are thinner in the middle. The valve push rods are the same for both intake and exhaust.

1. Lubricate the sockets in the cam followers with engine oil.
2. Install the push rods and the standard injector link.

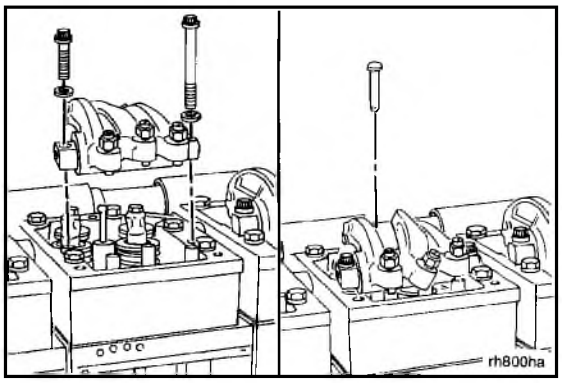


3. Install the rocker levers and the STC injector link. Refer to Procedure 07-09.

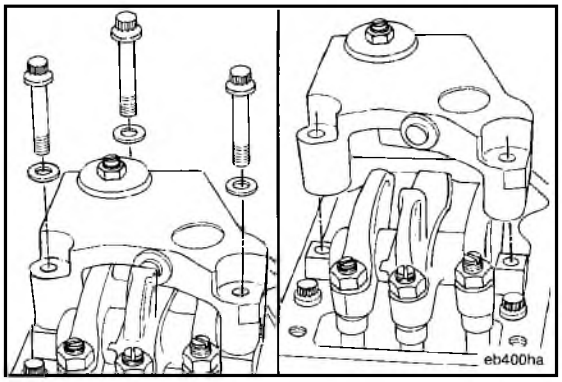


4. Install the Jacobs Engine Brake. Refer to Procedure 07-07.

5. Adjust the Jacobs Engine Brake. Refer to Procedure 07-06.
6. Adjust the valves and injectors. Refer to Procedure 07-05.

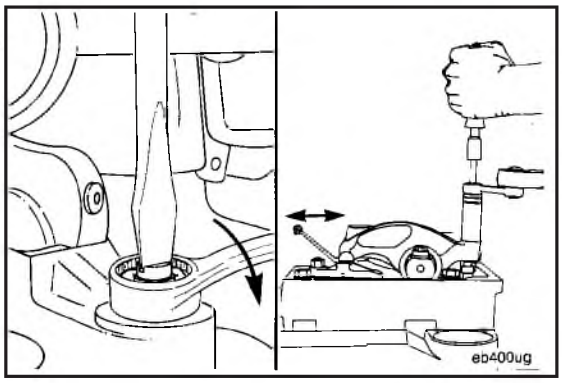


7. Install the rocker lever cover and all related parts. Refer to Procedure 07-04.

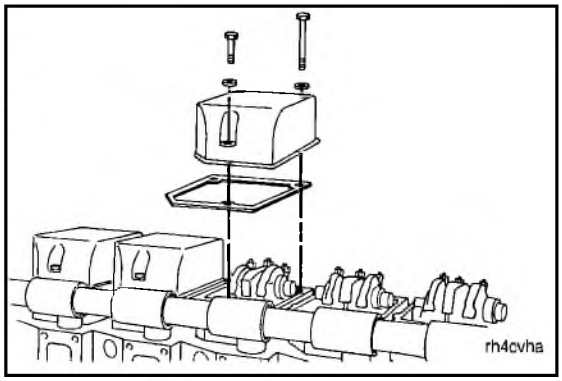


## Rocker Lever Assembly - Replace (07-09)

### Remove

1. Remove the rocker lever cover. Refer to Procedure 07-04.
2. Remove the Jacobs engine brake. Refer to Procedure 07-07.

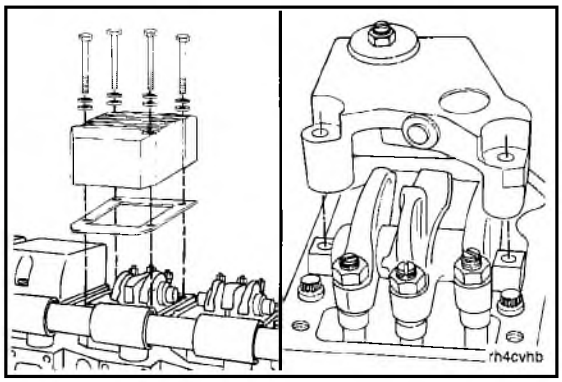


**NOTE:** Hold the STC injector link when loosening the adjusting screw. The link can fall into the cylinder head.

3. Loosen the rocker lever adjusting screw locknuts on all of the rocker levers. Loosen the adjusting screws until the push rods are loose.
4. Remove the STC injector link.

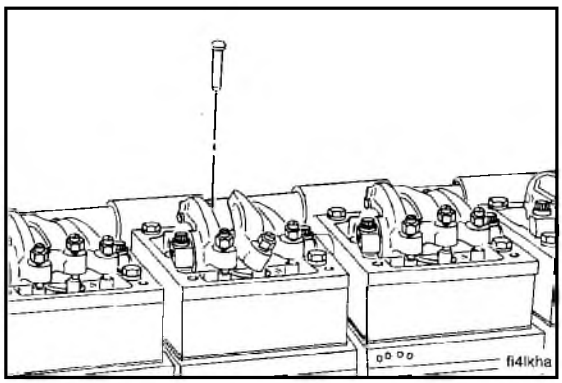

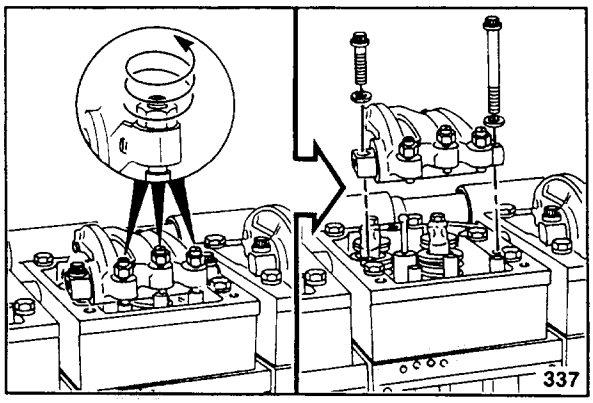


**Note:** Do not allow the rocker levers to fall off the shaft during removal.

5. Remove the rocker lever assemblies.

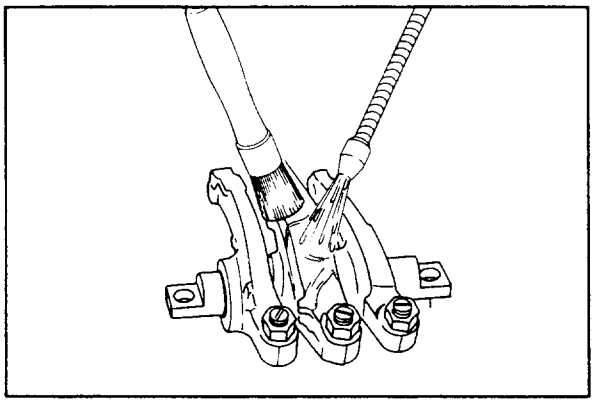

## Check For Reuse

1. Clean and check the rockers and shaft. Refer to Procedure 07-10.

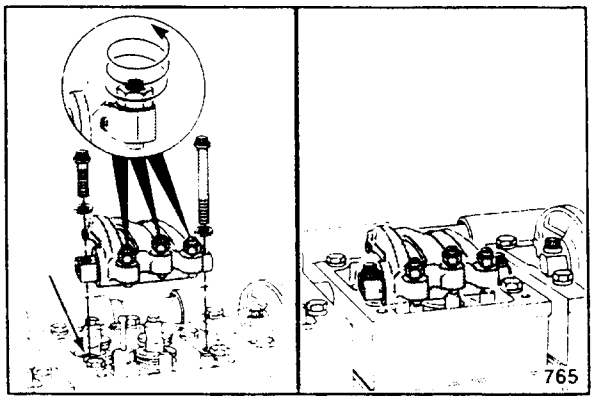


## Install

**Note:** Be sure the ring dowel that aligns the rocker shaft is installed in the housing.

**Note:** Be sure the adjusting screws are loose.

1. Position the rocker lever assembly on the housing. Install the capscrews two or three revolutions.
2. Align the push rod sockets with the adjusting screws. Align the injector links with the sockets in the rocker lever.
3. Tighten the capscrews to 90 N•m [65 ft-lb].

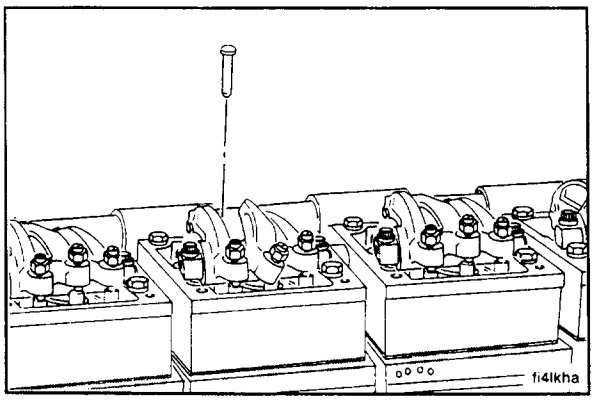


**Caution: The STC link must be installed as shown. Failure will result if it is installed upside down.**

4. Install the STC injector link.

5. Install the Jacobs engine brake. Refer to Procedure 07-07.

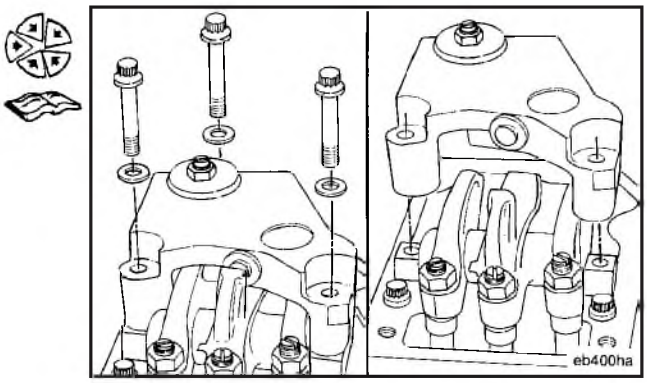


6. Adjust the Jacobs engine brake. Refer to Procedure 07-06.
7. Adjust the valves and injectors. Refer to Procedure 07-05.

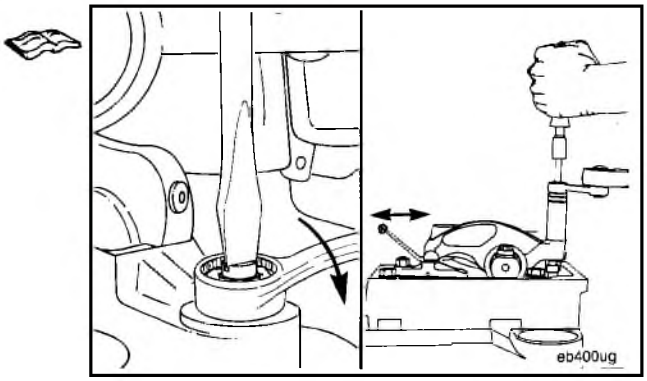


8. Install the rocker lever cover and related parts. Refer to Procedure 07-04.

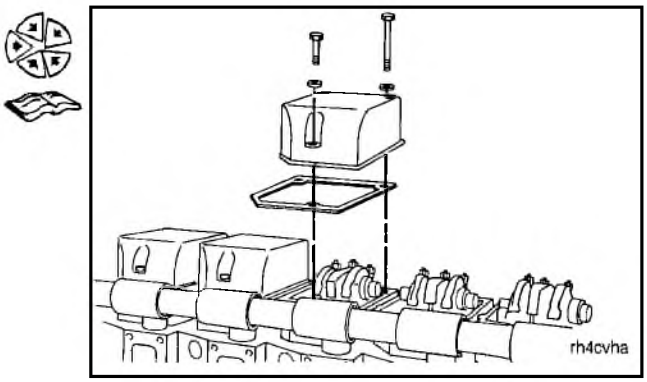


## Rocker Lever Assembly - Clean And Check For Reuse (07-10)

1. Remove the capscrews and lock washers. Pull the shaft out of the rocker levers.
2. Clean and check the parts for damage.

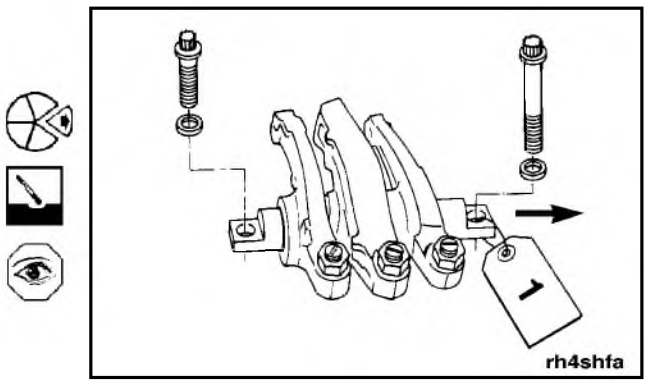

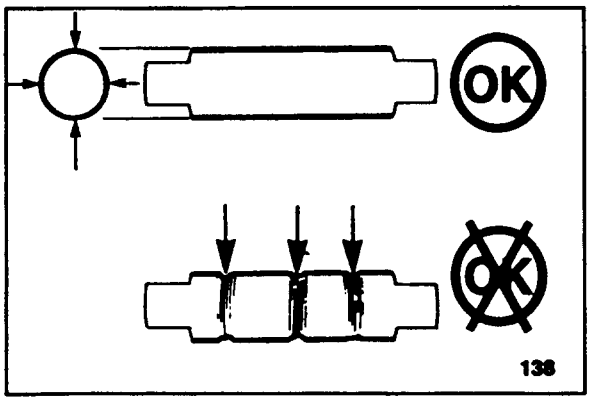


3. Check the shaft for damage or roughness.

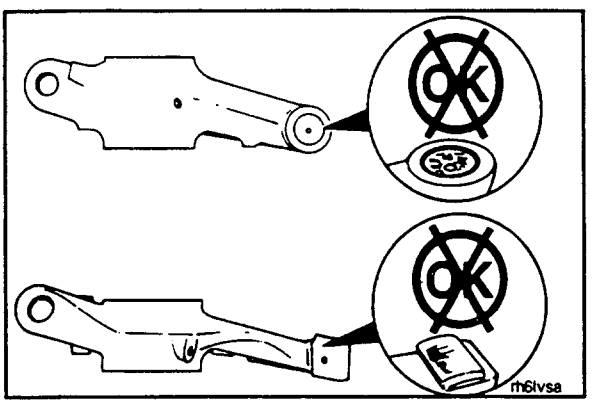


4. Check the socket for wear. Check the valve lever pad for wear.

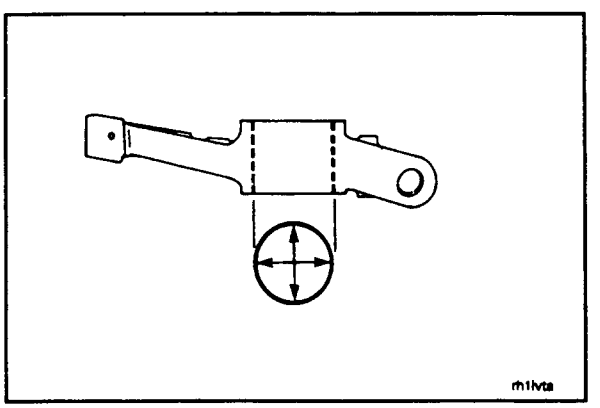


5. Check the bushing wear. Measure the I.D. of the bushing.

| Bushing Bore I.D. | | |
|---|---|---|
| mm | | in |
| 34.890 | MIN | 1.3735 |
| 34.990 | MAX | 1.3776 |

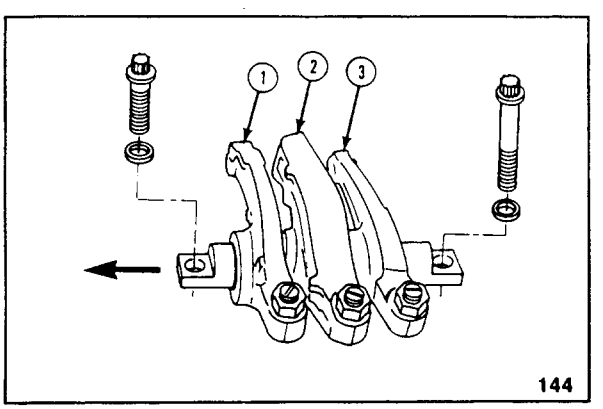


6. Lubricate the shaft with engine oil.

**Note:** The oil drillings in the shaft must be in alignment with the oil drillings in the levers.

7. Slide the levers on the shaft in the sequence shown.
   a. Exhaust lever
   b. Injector lever
   c. Intake lever
8. Install the plain washers and capscrews.

# Rocker Lever Housing - Replace (07-11)

## Remove

1. Drain the cooling system. Open the draincock and remove the lower radiator hose to drain the cooling system. Refer to Procedure 01-06.

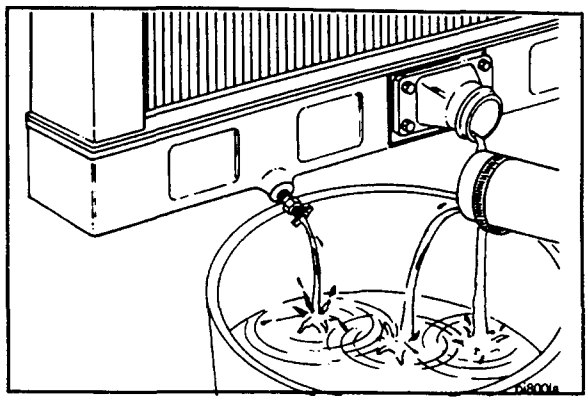

2. Remove the retainer clip.

**Note:** Retainer clips are not used on newer engines. The retainer clip may be discarded on older engines.

3. Use the water tube driver, Part No. ST-1319 (20). Use a hammer. Drive the water tube towards the front of the engine until the back part of the tube clears the rocker lever housing as shown.

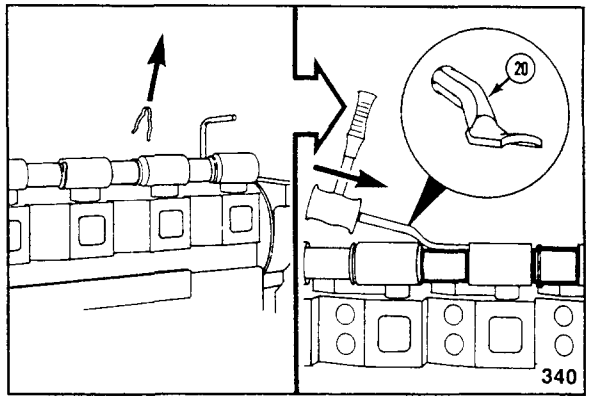


**Note:** If the engine does not have STC, the aftercooler does not need to be removed. Proceed to Step 6.

4. Remove the aftercooler or intake manifold. Refer to Procedure 03-17.

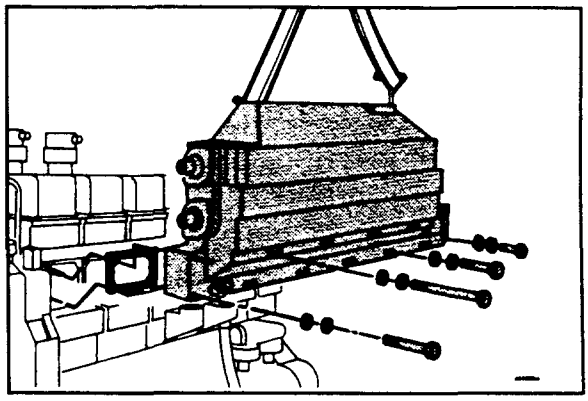

5. Remove the STC oil manifold. Refer to Procedure 05-34.

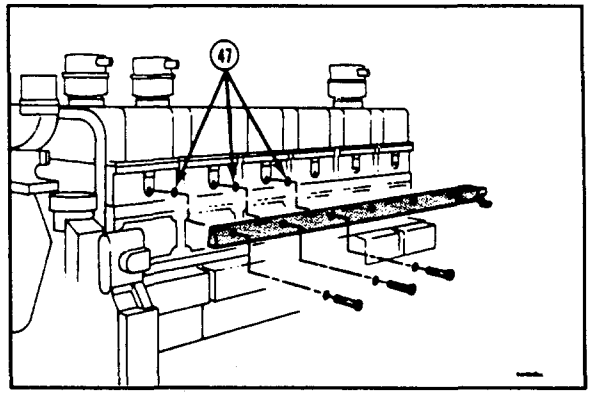

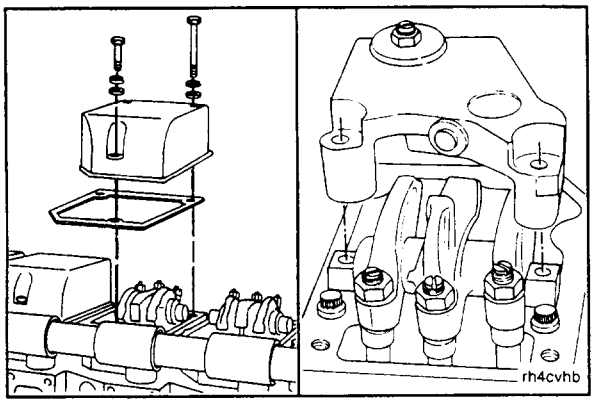


6. Remove the rocker lever cover. Refer to Procedure 07-04.
7. Remove the Jacobs engine brake. Refer to Procedure 07-07.

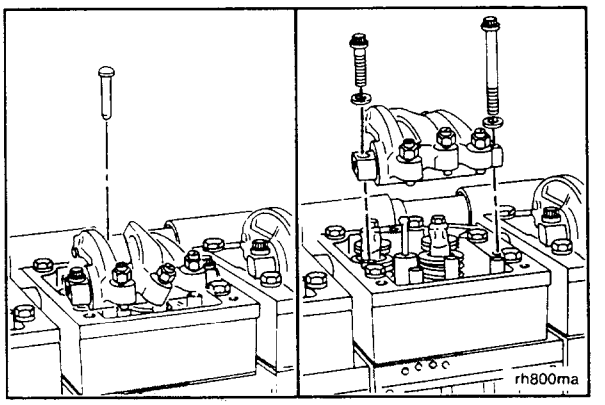


8. Remove the STC injector link and the rocker lever assembly. Refer to Procedure 07-09.

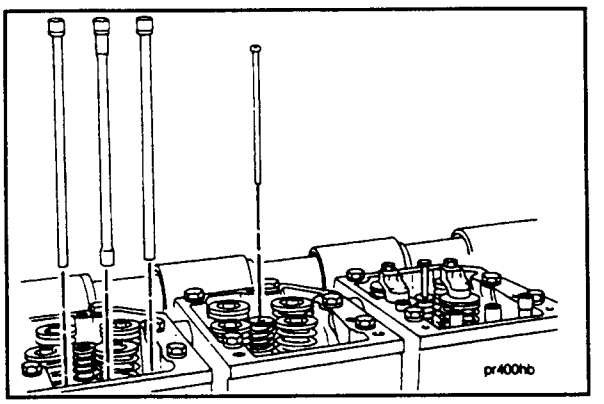


9. Remove the valve push rods, injector push rod, injector link, and crossheads.

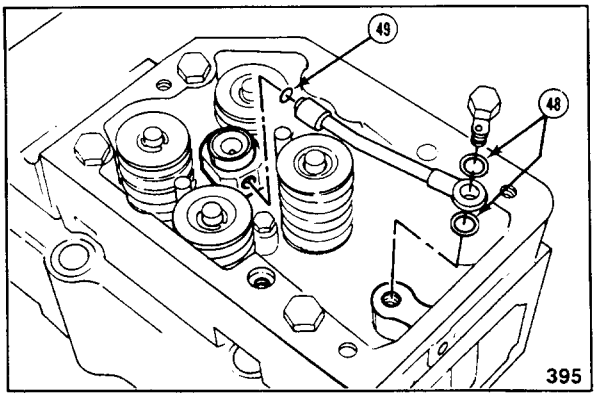


10. Remove the STC banjo connector mounting screw. Remove the banjo connector. Remove and discard the sealing washers (48) and the o-ring (49).

11. Remove the six mounting capscrews and the rocker lever housing.

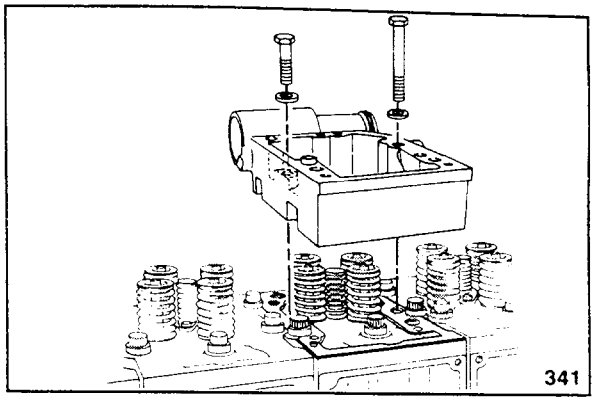


**Caution: Some rocker lever housing gaskets have a thin metal core. Handle with care to avoid personal injury.**

12. Use pliers. Remove and discard the gasket.

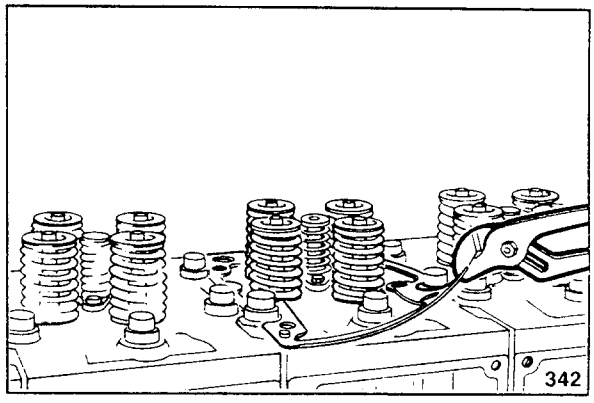


## Check For Reuse

1. Remove the parts.
   a. Water transfer tube
   b. O-rings
      Discard the o-rings.
2. Use steam or solvent to clean the parts.

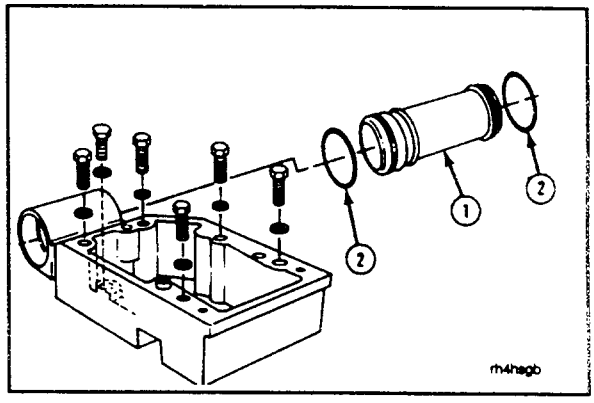


3. Check the parts for damage. If the ring dowel (4) is damaged it must be replaced. Use the blind hole puller contained in Part No. 3375784 Light Duty Puller Kit, or equivalent to remove the dowel ring.
4. Use the dye penetrant method and check the housing for cracks. Discard the housing if it is cracked.

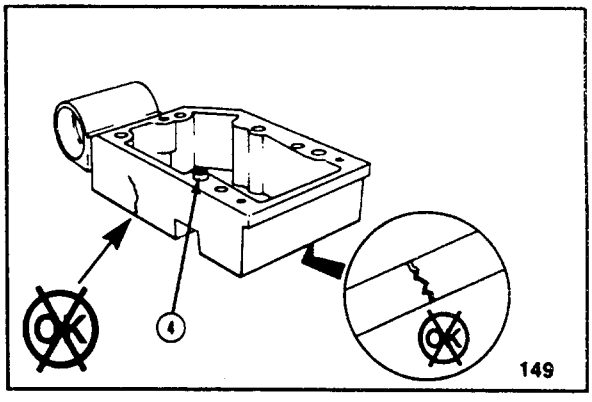

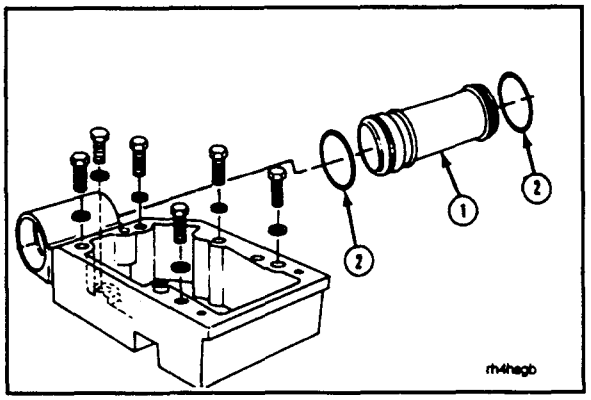


## Install

1. Lubricate the o-rings (2) with vegetable oil. Install the o-rings.
2. Install the water transfer tube (1).

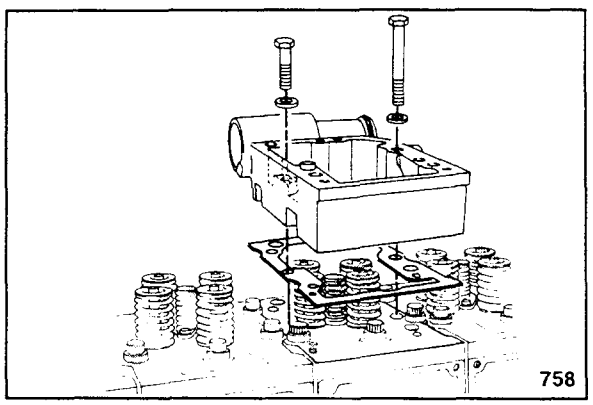


**Note:** The gasket and housing must be aligned correctly with the dowel pins.

3. Install the gasket and housing.

**Note:** One of the capscrews is shorter than the other five.

4. Install the six capscrews.

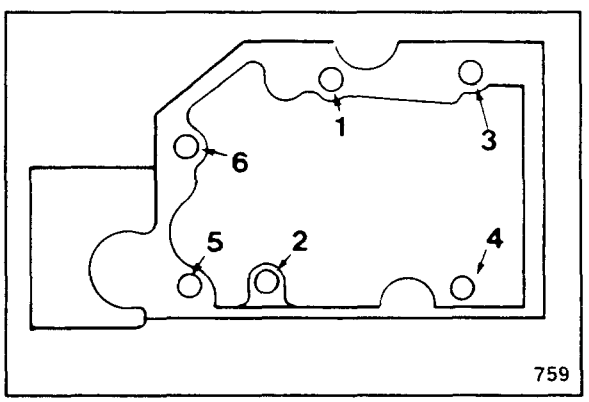


5. Use the sequence shown to tighten the capscrews. Tighten the capscrews to 90 N•m [65 ft-lb].

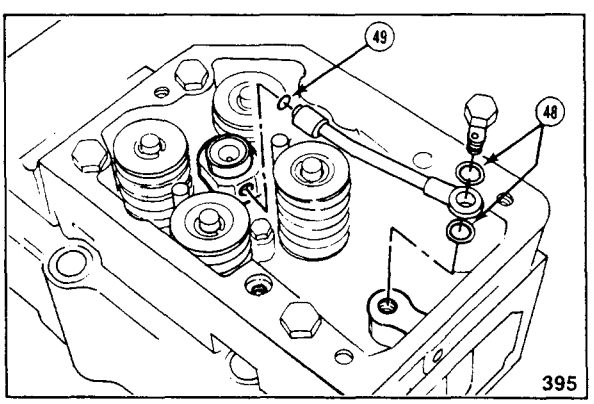


6. Lubricate the o-ring with engine oil. Install the o-ring (49) on the jumper tube.
7. Install the jumper tube, copper sealing washers (48) and connector screw. Tighten the screw to 25 N•m [20 ft-lb].

## Install The Crossheads

1. Lubricate the crosshead guides and valve stems with engine oil.

**Note:** The adjusting screws must be toward the exhaust side of the engine.

2. Install and adjust the crossheads. Push down on the crosshead and slowly turn the adjusting screw until it touches the valve stem. Do not turn it far enough to raise the crosshead.

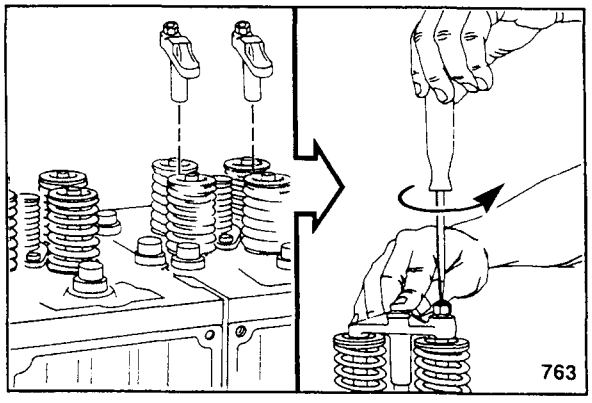


**Note:** The adjusting screw must not turn when the locknut is torqued.

3. Tighten the locknut to the value shown.The torque values given are with and without the use of torque wrench adapter Part No. ST-669.

| | Torque Value | |
|---|---|---|
| | N•m | [ft-lb] |
| **Without Jacobs brake** | | |
| (with adapter) | 35 | [25] |
| (without adapter) | 40 | [30] |
| **With Jacobs brake** | | |
| (with adapter) | 40 | [30] |
| (without adapter) | 45 | [35] |

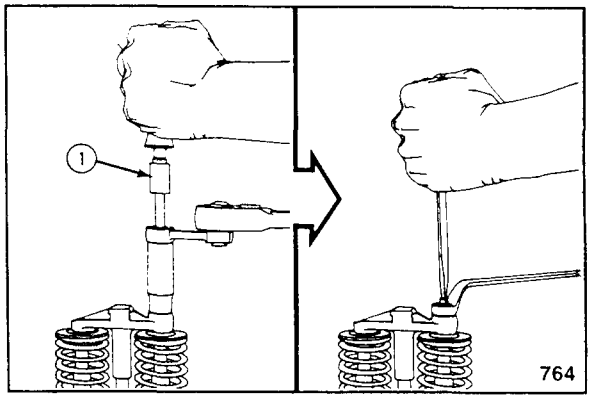


**Note:** The push rods must be seated correctly in the cam followers.

**Note:** The injector push rods are thinner in the middle. The valve push rods are the same for both intake and exhaust.

1. Lubricate the sockets in the cam followers with engine oil.
2. Install the push rods and the standard injector link.

**Note:** Do not install the STC injector link until after the rocker lever assembly is installed.

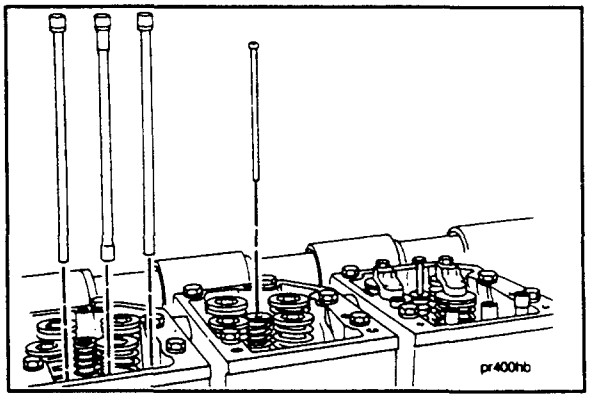


3. Install the rocker levers and STC injector link. Refer to Procedure 07-09.

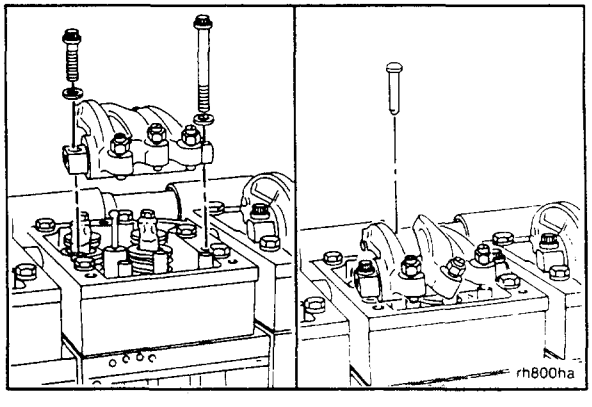

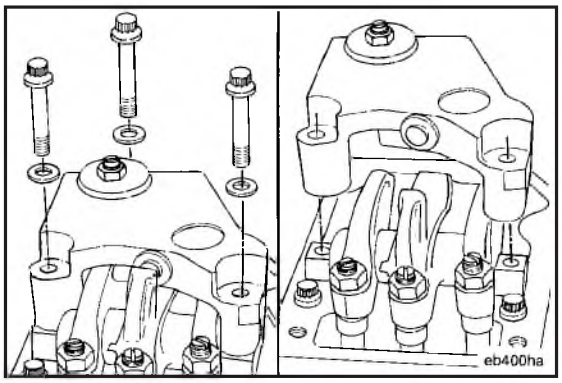


4. Install the Jacobs engine brake. Refer to Procedure 07-07.

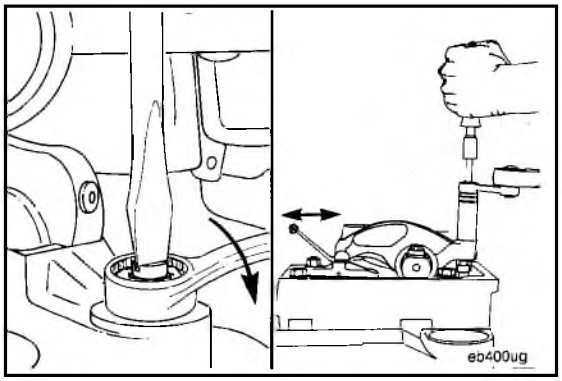


5. Adjust the Jacobs engine brake. Refer to Procedure 07-06.
6. Adjust the valves and injectors. Refer to Procedure 07-05.

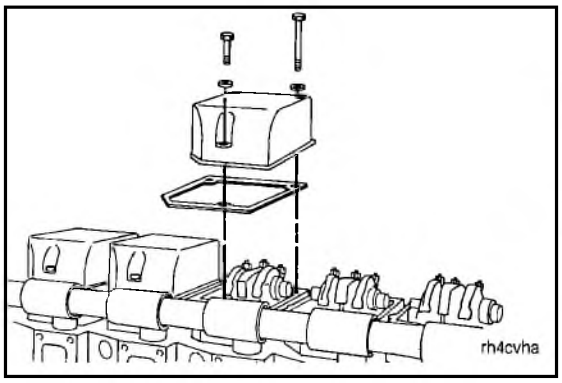


**NOTE:** Gasket cement will prevent the gasket from sealing properly.

7. Install the gasket, rocker lever cover, and capscrews. Tighten the short capscrew first. Tighten the capscrews to 45 N•m [35 ft-lb].

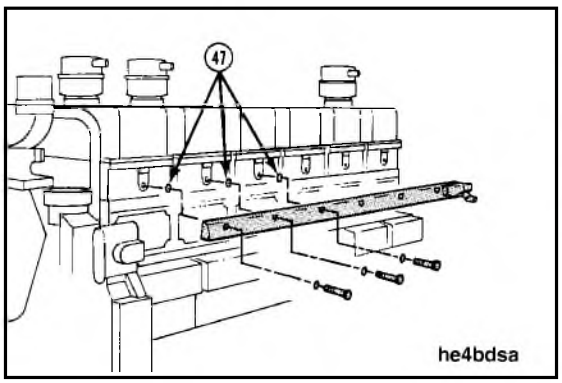


8. Lubricate the o-rings with vegetable oil. Install the o-rings in the STC oil manifold.
9. Install the manifold, washers and capscrews. Begin tightening the capscrews at the center of the manifold and work towards the outer edges. Tighten the capscrews to 9.5 N•m [85 in-lb].

10. Install the aftercooler or intake manifold and related parts. Refer to Procedure 03-17.

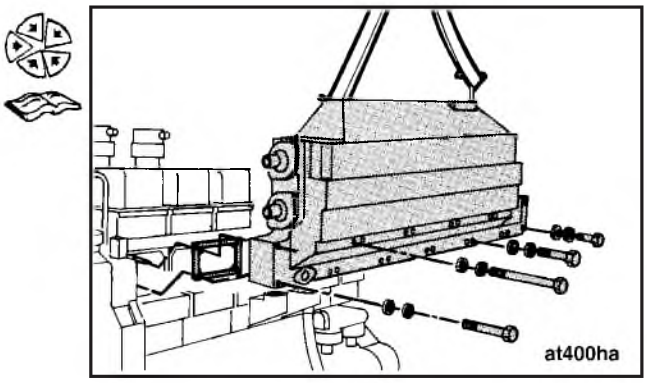


11. Use water tube driver Part No. ST-1319 and a hammer. Drive the water tube into the adjacent housing until the groove is visible.

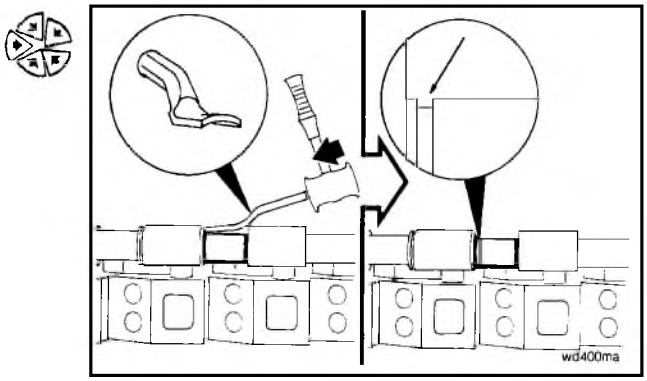


12. Fill the cooling system. Refer to Procedure 01-07.
13. Operate the engine to 70°C [160°F] coolant temperature and check for leaks.

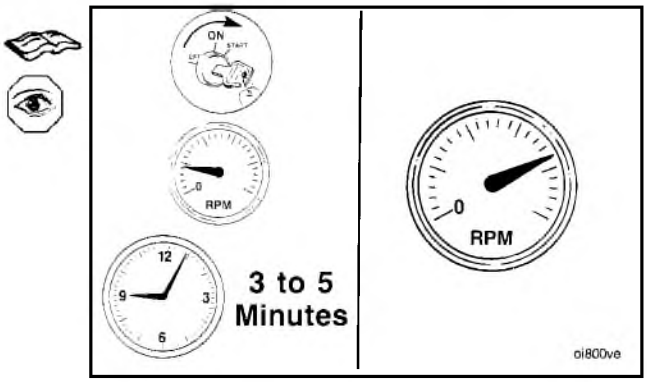


## Check Cylinder Head Gasket For Combustion, Coolant Or Oil Leak (07-12)

1. Clean the exterior of the engine. Use steam or high pressure water.

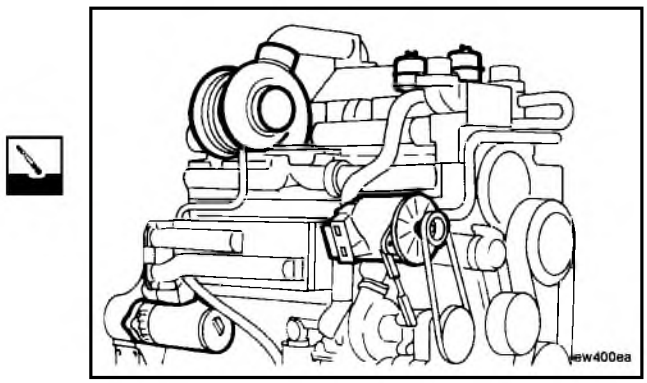

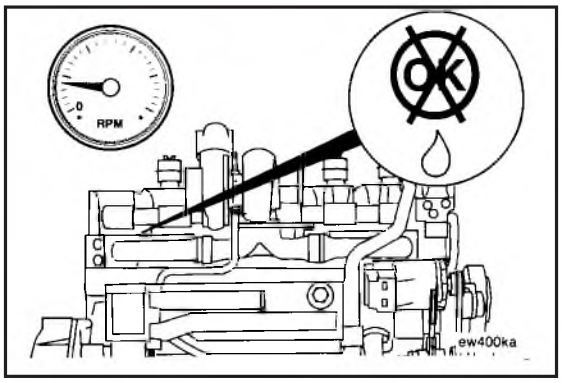


2. Operate the engine at low idle.
3. Check for oil or coolant leaks between the cylinder head and the engine block.

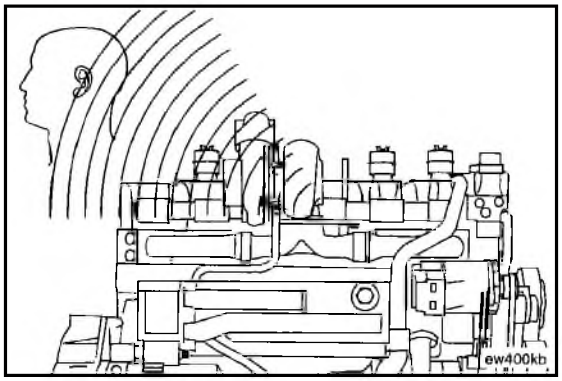


4. Listen for a chirping sound between the cylinder head and engine block. A chirping sound indicates a combustion leak.

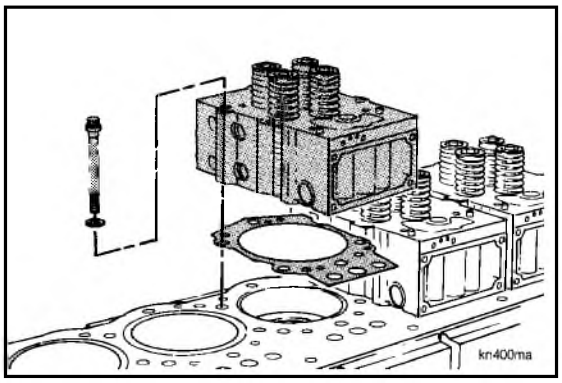


5. If a leak is found, remove the cylinder head and all related components. Refer to Procedure 07-14.

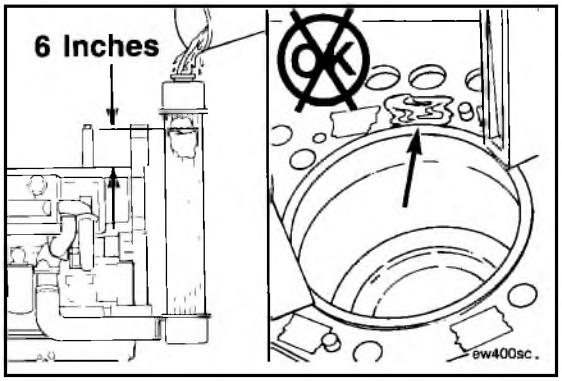


6. Pressure check the cooling system to make sure the leak was at the head gasket and not at the liner counterbore. Refer to Procedure 01-35.

7. Install the cylinder head and all related components. Refer to Procedure 07-14.

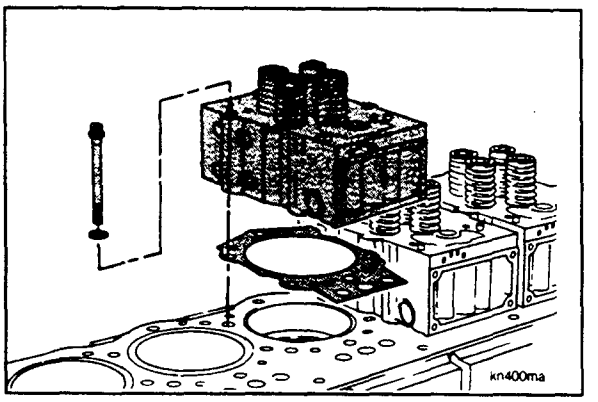


## Power Cylinder - Locate Failed Cylinder (07-13)

**Note:** This procedure describes a method for locating a cylinder which is burning oil or loosing compression due to piston ring leakage.

1. Remove the turbocharger(s). Refer to Procedure 03-14 (KTTA) or 03-14 (KT/KTA).
2. Plug the turbocharger oil supply line.

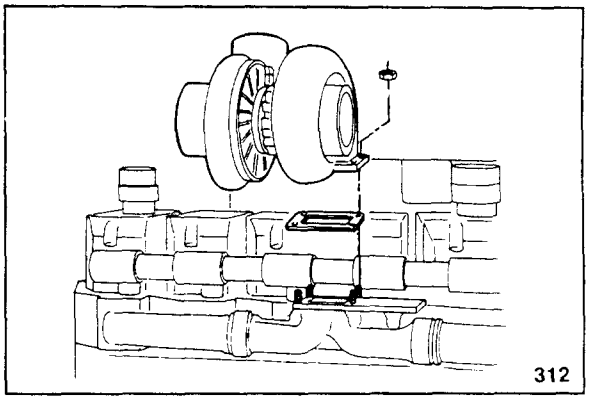


3. Remove the exhaust manifold. Refer to Procedure 03-15.

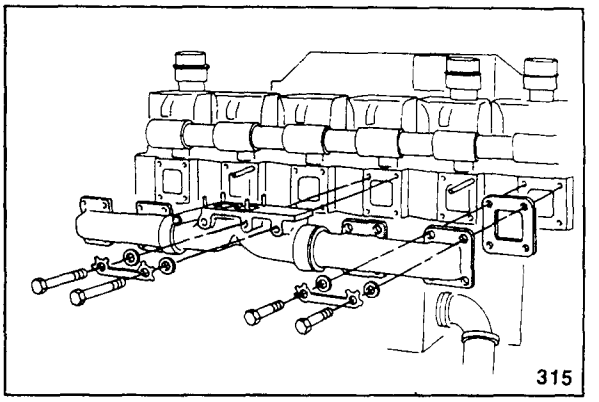


4. Add one unit of Part No. 3376891 Fluorescent Tracer to each 38 liters [10.0 U.S. gallons] of engine oil.
5. Idle the engine for 5-10 minutes or until normal operating temperature is reached, to allow the dye to circulate through the lubricating system.

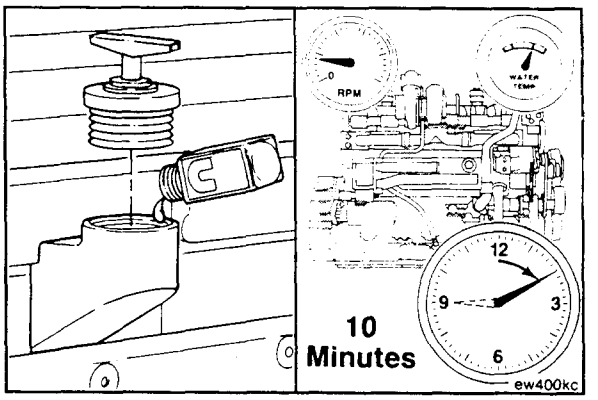

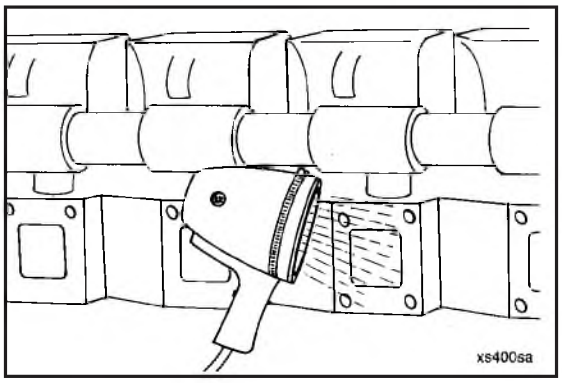


6. Use a high intensity blacklight, Part No. 3377253 or 3377394, or equivalent. Inspect the exhaust ports. A yellow glow indicates a fuel leak. A dark blue glow indicates an oil leak.

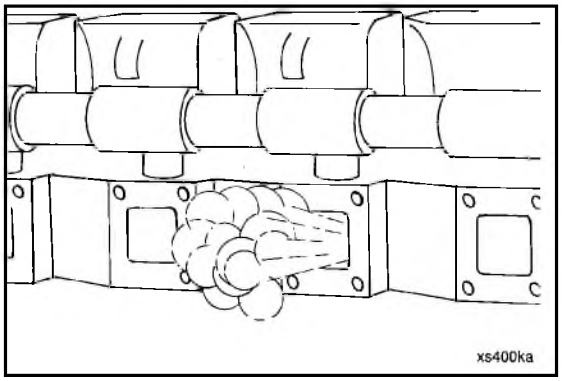


7. Look for excessive blue smoke coming out of the faulty cylinder.

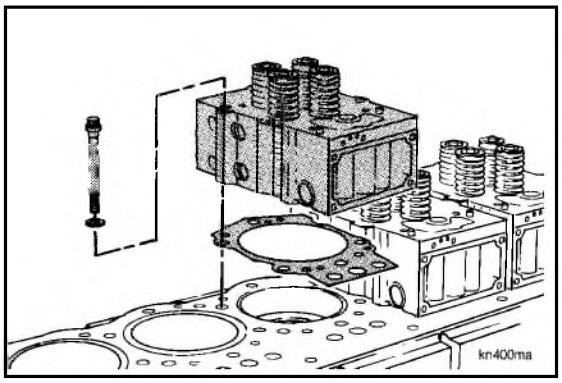


8. Remove the cylinder head. Refer to Procedure 07-14.
9. Check to see if the problem is with the valves or valve guides.

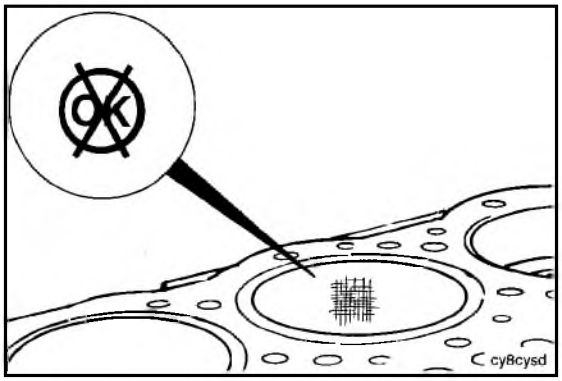


10. Bar the engine over and check the liner bore for damage.

11. Remove the piston. Check the piston and rings for damage. Refer to Procedure 07-24.
12. Remove the liner. Refer to Procedure 07-26.

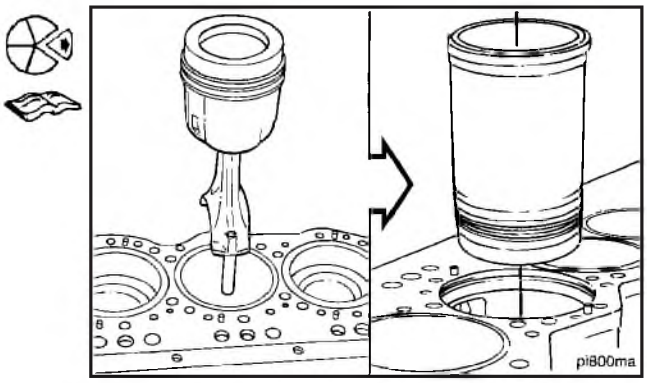


13. Install the liner, piston, cylinder head, exhaust manifold and turbocharger. Refer to Procedures 07-26, 07-24, 07-14, 03-15 and 03-14 or 03-13.

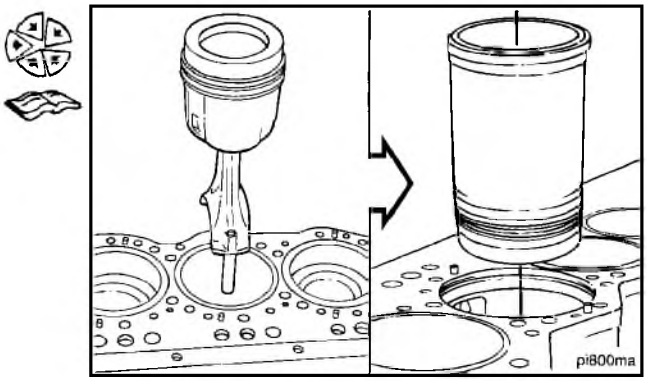


## Cylinder Head Gasket - Replace (07-14)

### Remove

1. Disconnect the batteries or air supply line to the air starter to prevent accidental engine starting.

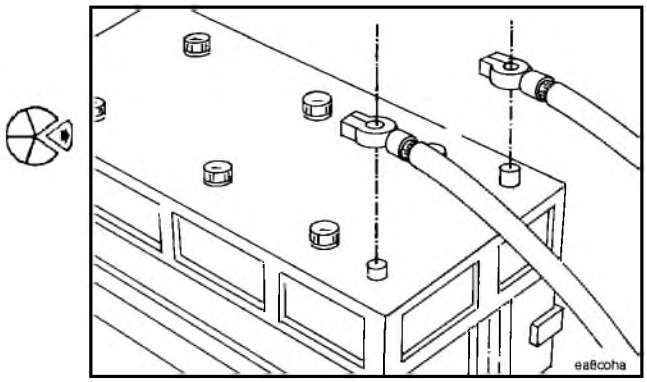


2. Open the draincock on the bottom of the radiator and remove the lower radiator hose to drain the cooling system.

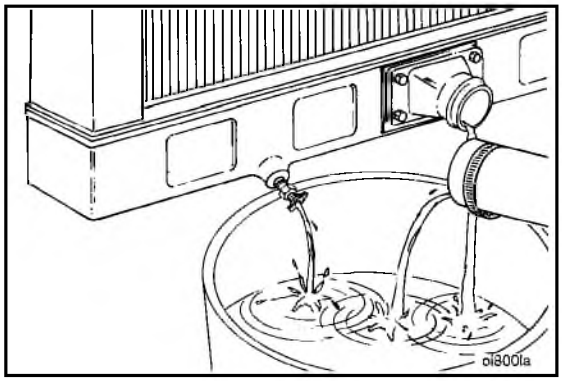

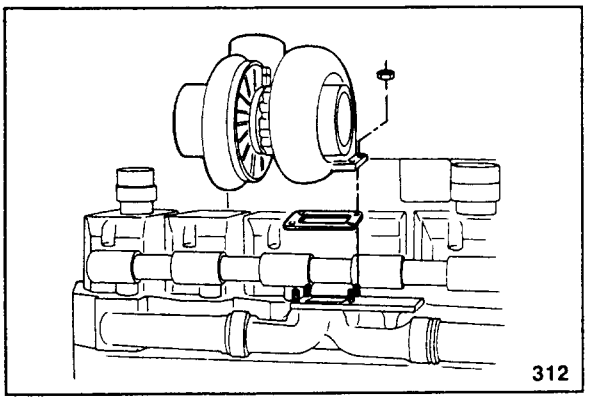


3. Remove the turbocharger(s). Refer to Procedure 03-13 (KT or KTA) or 03-14 (KTTA).

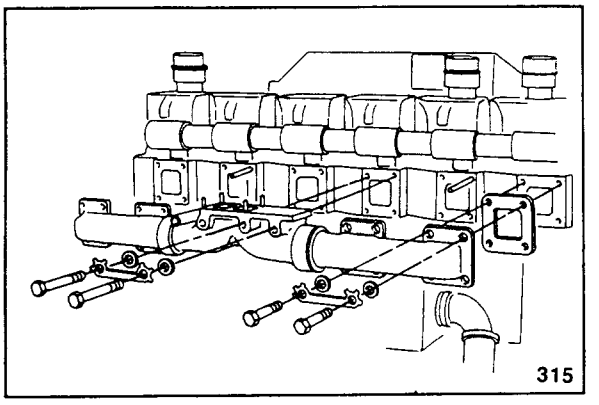


4. Remove the exhaust manifold. Refer to Procedure 03-15.

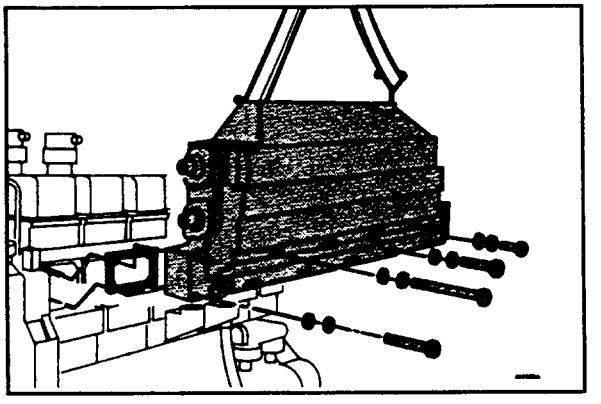

5. Remove the aftercooler or intake manifold. Refer to Procedure 03-17.

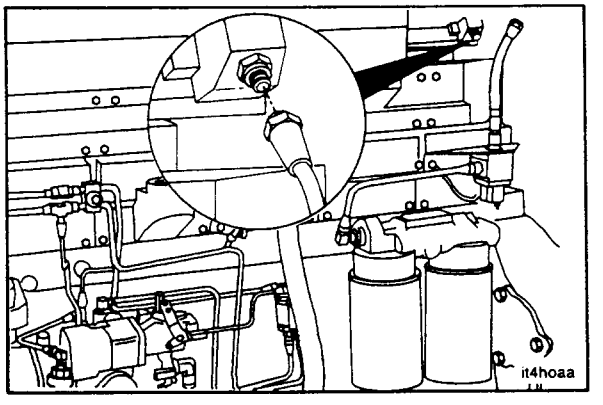


6. If the engine is equipped with STC disconnect the oil supply hose.

7. On engines equipped with STC remove the oil manifold assembly. Discard the six o-rings (47).

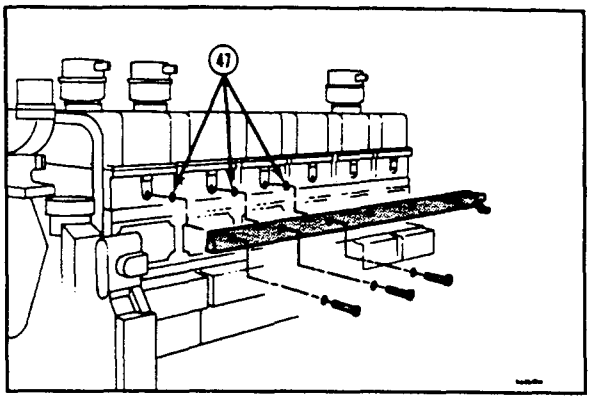


8. Remove the fuel manifold. Discard the twelve o-rings.

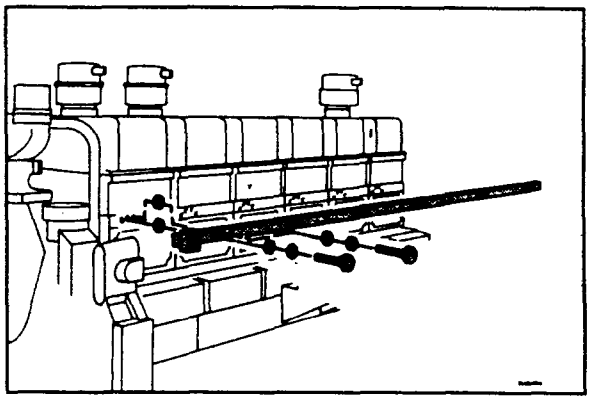

9. Remove the rocker lever cover. Refer to Procedure 07-04.
10. Remove the Jacobs engine brake. Refer to Procedure 07-07.

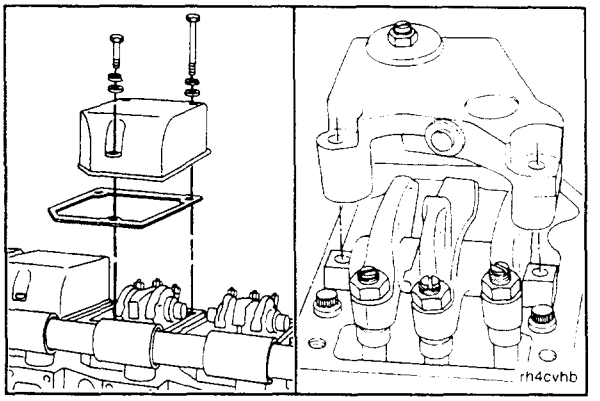


11. Remove the STC injector link and the rocker levers. Refer to Procedure 07-09.

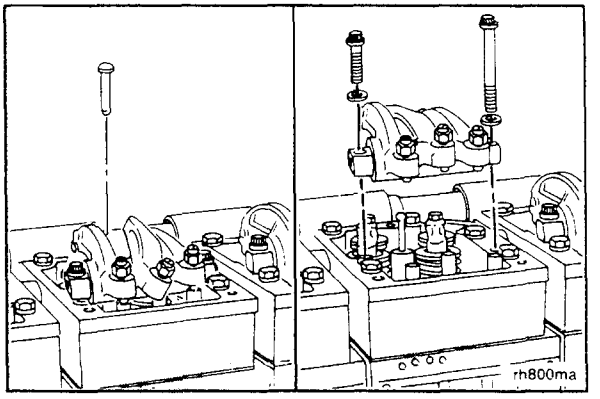

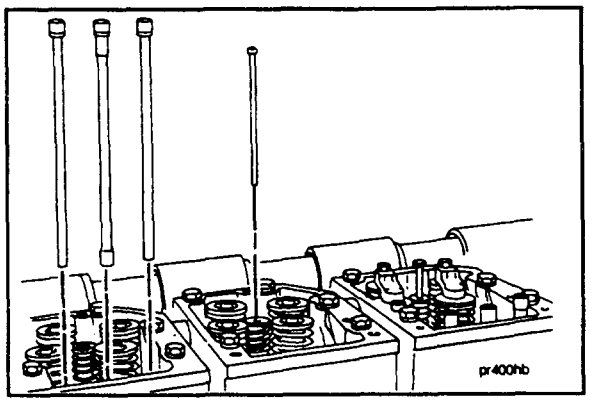


12. Remove the valve push rods (17), the injector push rod (18), the injector standard link, and the crossheads.

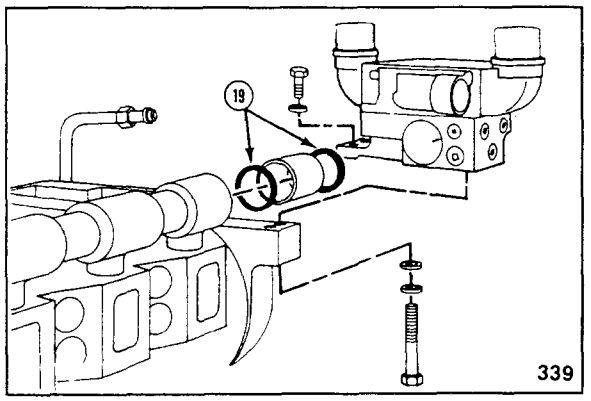


13. Disconnect the air compressor water outlet tube from the thermostat housing.
14. Remove the four mounting capscrews and the thermostat housing assembly.
15. Remove the water transfer tube. Remove and discard the two o-rings (19).

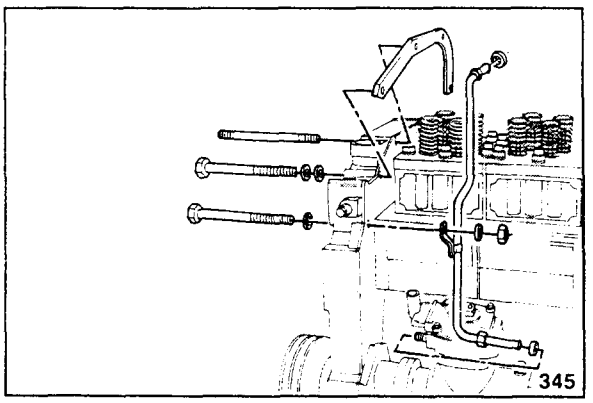


16. Remove the air compressor water outlet tube. Remove and discard the two grommets.

**Note:** If the engine has a belt driven fan hub, the gear cover clamping plate is installed using three studs and one capscrew.

If the engine does not have a belt driven fan hub, the clamping plate is installed using four capscrews.

17. Remove the clamping plate.

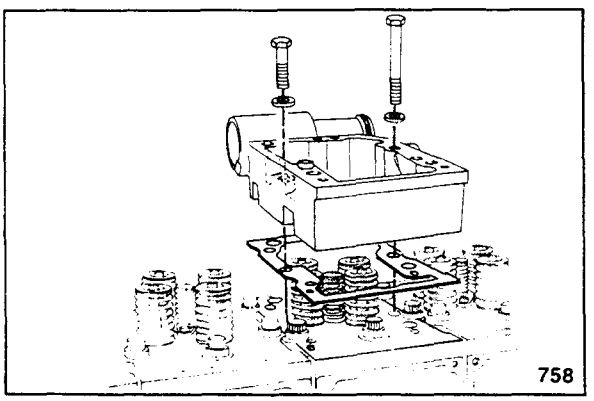


18. Remove the rocker housing. Refer to Procedure 07-11.

19. Remove the injector. Refer to Procedure 05-09.

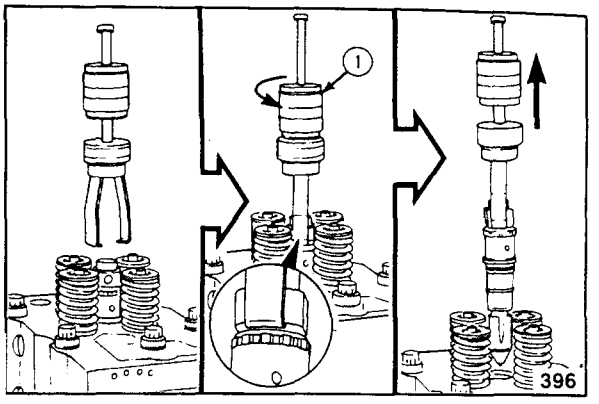


**Caution: This assembly weighs more than 23 kg [50 lb].**

20. Remove the six capscrews and the cylinder head. Remove and discard the gasket.

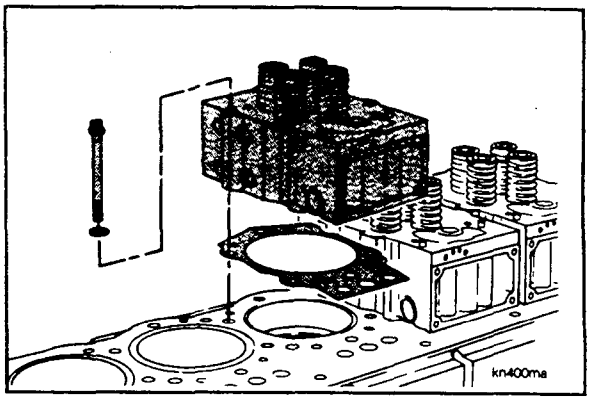


## Check For Reuse

1. Use a scraper or a fibrous abrasive pad such as Scotch-Brite 7477, or equivalent, and solvent to clean the top deck surface of the block. Be careful not to get dirt into the cylinder. The surface must be free of dirt, oil, and gasket material, but need not look like new metal.

**Note:** Check the top surface of the block for wear. If fretting damage is present in an area where a head gasket seal ring or a grommet makes contact, the surface must be repaired. Refer to the Alternative Repair Manual.

**Note:** Fretting damage in any other area is acceptable if it does not change the protrusion measurement of the counterbore or liner.

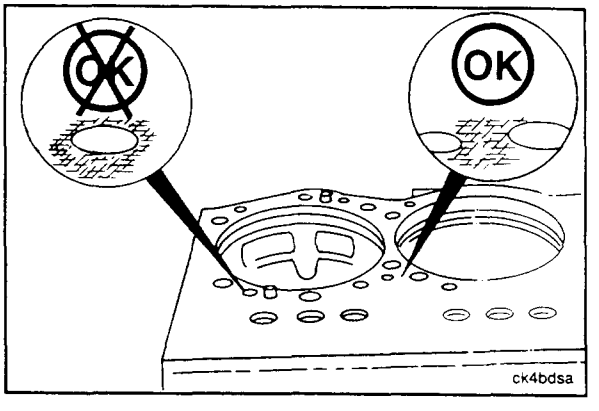


2. Visually inspect the groove pins for damage. Use the ST-1134 dowel pin extractor, or equivalent to remove the pins.

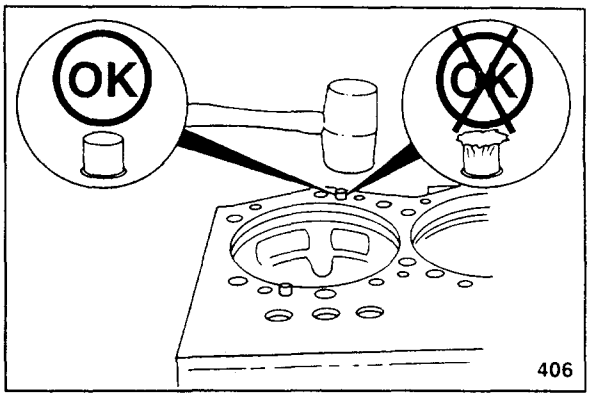

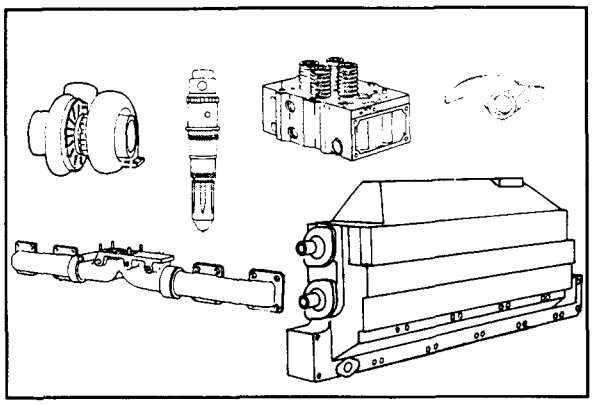

3. Clean and check all of the components removed for reuse. Refer to the following.

| Part | Procedure |
|---|---|
| Cylinder head | 07-15 |
| Injector | 05-10 |
| Aftercooler | 03-19 |
| Exhaust manifold | 03-16 |
| Rocker levers | 07-10 |
| Turbochargers | 03-12 |

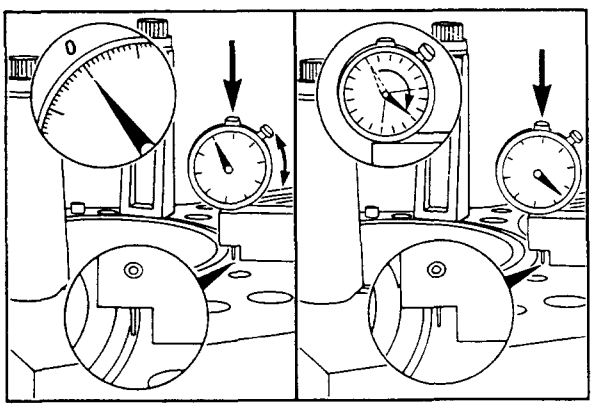

4. Check the liner protrusion. Refer to Procedure 07-27.

**Note:** If the protrusion is not correct remove the liner. Refer to Procedure 07-26. The protrusion can be adjusted using shims, and machining the counterbore ledge. Refer to the K19 Shop Manual.

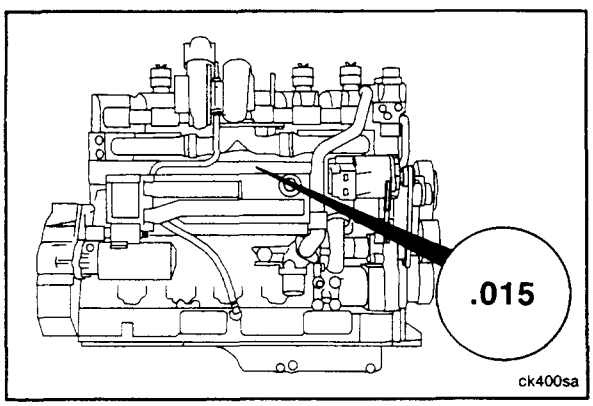


5. Check the cylinder block to determine if an oversize or a standard size head gasket is required.

**Note:** An oversize head gasket must be used on blocks that have had 0.25 mm to 0.76 mm [0.010 inch to 0.030 inch] material removed from the top surface of the block.

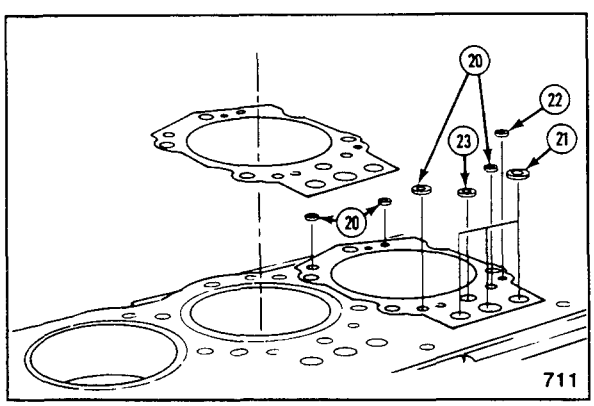


## Install

**Note:** The word "top" stamped on top of the head gasket must be visible after the gasket is installed.

1. Install the gasket and grommets:
   - (20) Water grommet (four)
   - (21) Push rod grommet (three)
   - (22) Oil grommet (one)
   - (23) Capscrew grommet (one)

**Note:** Two different length cylinder head capscrews have been used on the K19 engine. Engines with E.S.N. greater than 31103629 and all service blocks, use 203 mm [8 inch] long capscrews. Engines with E.S.N. less than 31103629 use 171 mm [6 3/4 inch] long capscrews.

2. Check the distance from the top of the block to the first thread in the hole for the cylinder head capscrew. If the distance is approximately 44 mm [1 3/4 inch], the 8 inch capscrews must be used.

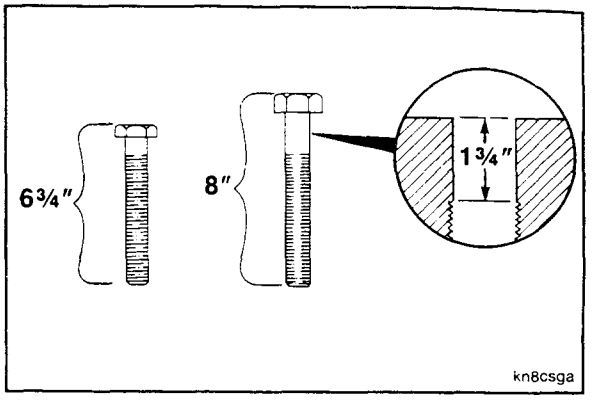


3. Install the cylinder head. It must slide easily over the groove pins.

   Do not mix black and silver capscrews in any one head. The torque values are different.

4. Lubricate the capscrew head, threads and washers with SAE EP 140W oil. Allow excess oil to drip off of the capscrews before installing in the block.

   Install the washers and capscrews.

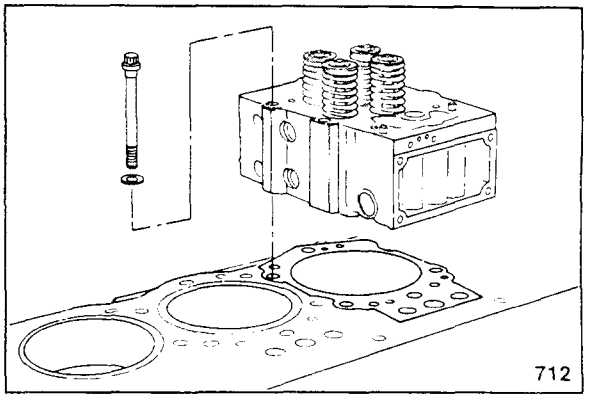


5. Tighten the capscrews using the following steps and in the sequence shown.

| Cylinder Head Capscrew Torque Values | | | | |
|---|---|---|---|---|
| Black | | | Silver | |
| N•m | [ft-lb] | Step | N•m | [ft-lb] |
| 65 | [50] | 1 | 65 | [50] |
| 200 | [150] | 2 | 160 | [120] |
| 340 | [250] | 3 | 250 | [185] |
| 490 | [360] | 4 | 345 | [255] |

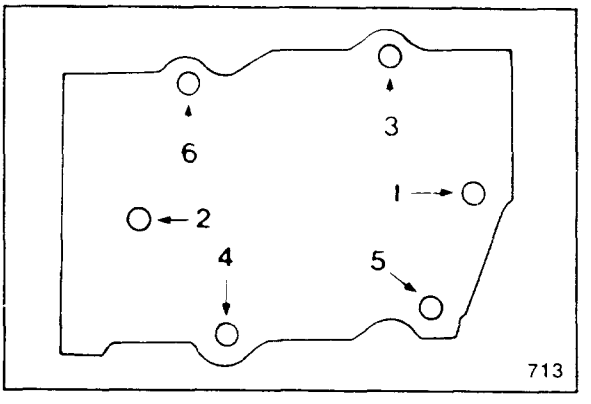


6. Install the gear cover clamping plate. Tighten the capscrews to 45 N•m [35 ft-lb].

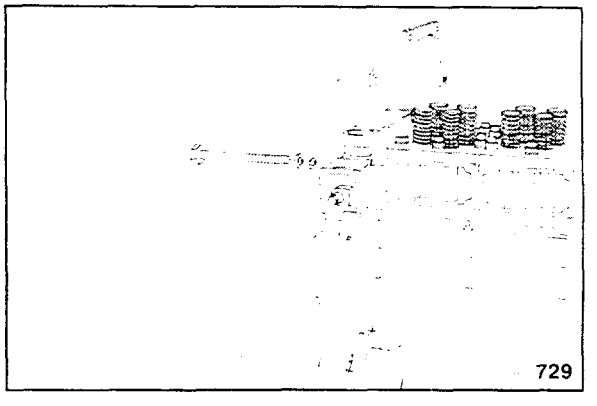

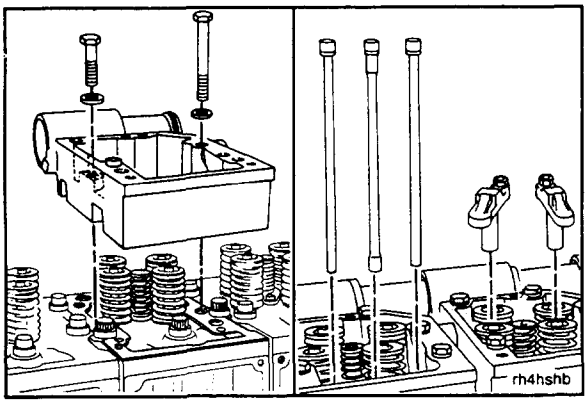


7. Install the rocker lever housing, push rods and cross-heads. Refer to Procedure 07-11.

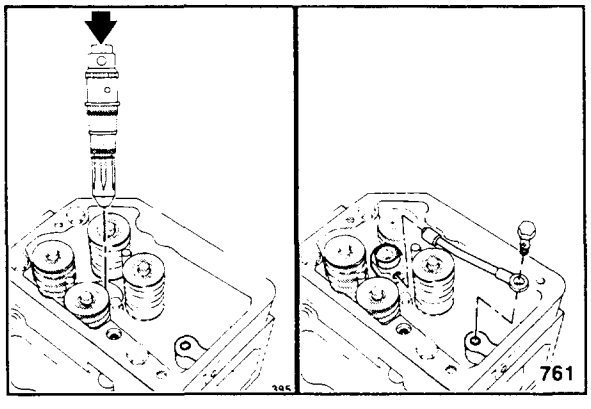


8. Install the injector. Refer to Procedure 05-09.

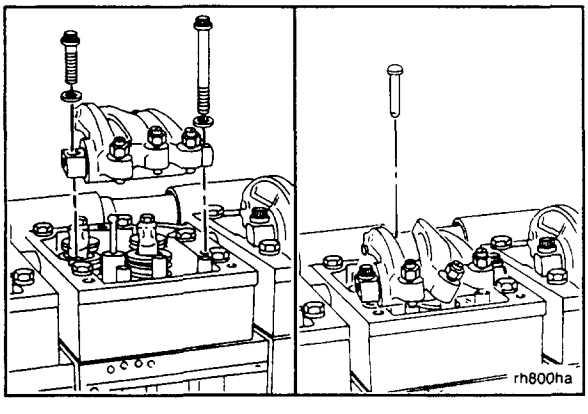


9. Install the rocker levers and the STC injector link. Refer to Procedure 07-09.

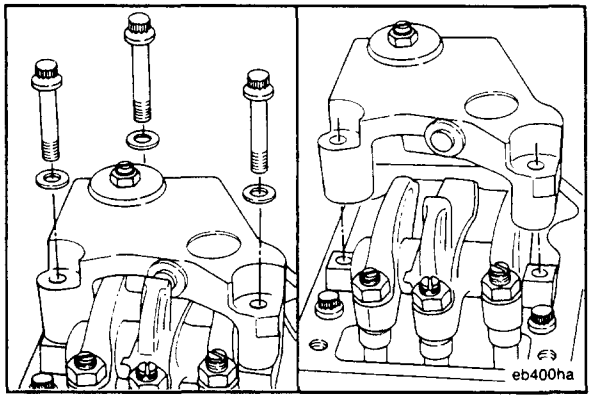


10. Install the Jacobs engine brake. Refer to Procedure 07-07.

11. Adjust the Jacobs engine brake. Refer to Procedure 07-06.
12. Adjust the valves and injectors. Refer to Procedure 07-05.

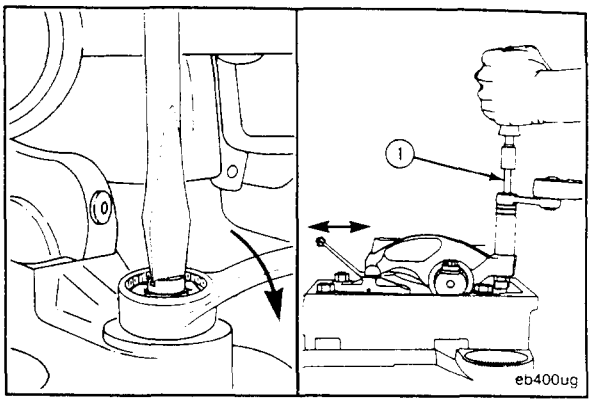


**Note:** If the engine has an engine brake, connect the solenoid wire to the terminal inside the cover.

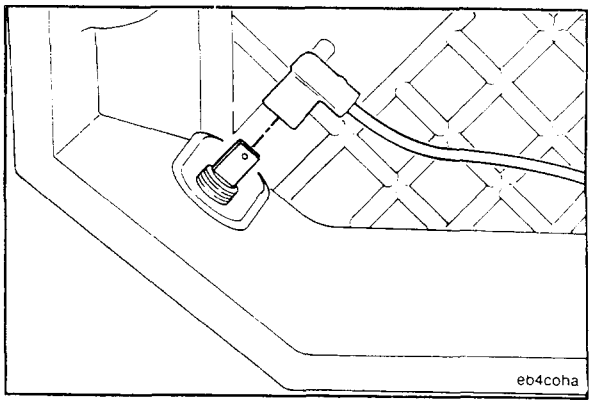


**Note:** Gasket cement will prevent the gasket from sealing properly.

13. Install the rocker lever cover, gasket, washers and capscrews. Tighten the short capscrew first. Tighten all the capscrews to 45 N•m [35 ft-lb].

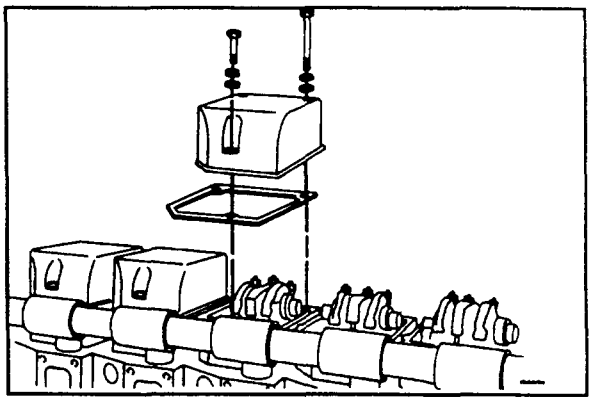

**Note:** The air compressor water outlet tube must be positioned before the fuel manifold is installed.

**Note:** Do not tighten the nut until both ends of the tube have been connected.

14. Install the air compressor water outlet tube and clamp.

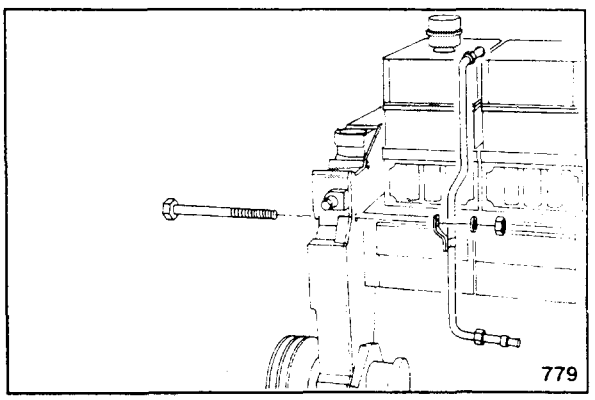

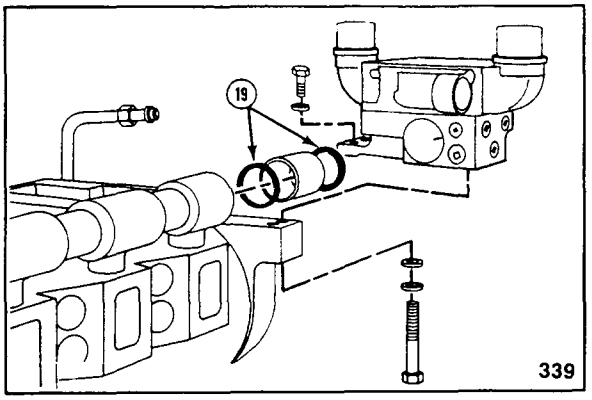

15. Install the o-rings (19) on the transfer tube.
16. Use vegetable oil and lubricate the o-rings. Install the tube in the bore of the rocker lever housing.
17. Align the bore in the thermostat housing support with the transfer tube. Push the support into position.

**Note:** The upper outside capscrew holds a clip for the after-cooler water inlet tube.

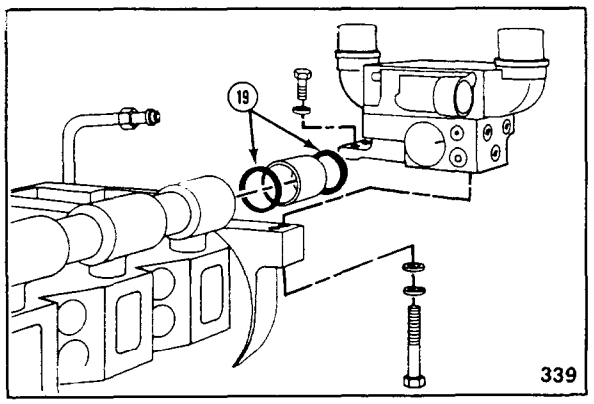

18. Install the four lockwashers and capscrews. Tighten the capscrews to 45 N•m [35 ft-lb].
19. Connect the air compressor water outlet tube and grommet to the fitting on the thermostat housing.
20. Tighten the front cover capscrew that holds the water tube clamp to 45 N•m [35 ft-lb].

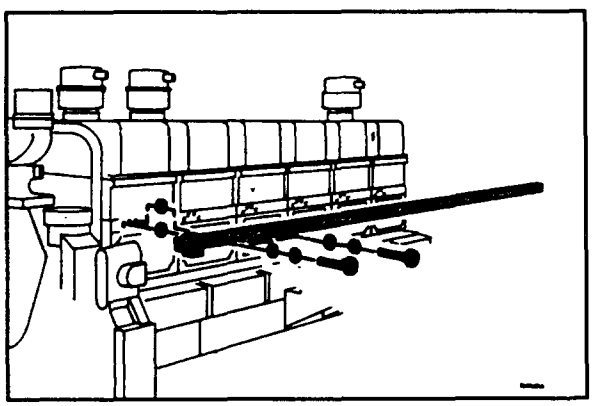

21. Install Fuel Manifold

**Note:** The fuel junction box on older engines can be towards the rear of the engine.

a. Lubricate the o-rings with vegetable oil and install them in the fuel manifold.

b. Install the manifold, washers and capscrews. Begin tightening at the center of the manifold and work toward the outer edges. Tighten the capscrews to 9.5 N•m [85 in-lb].

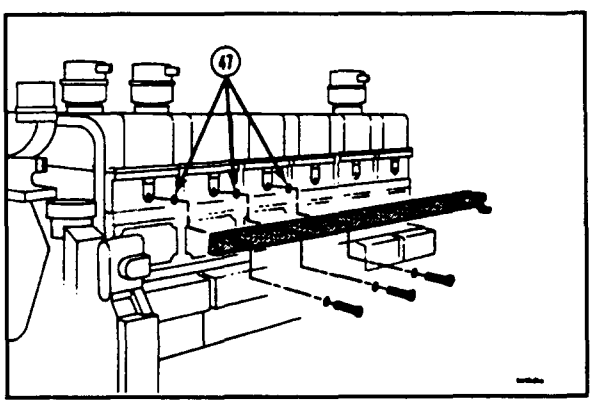

22. Install Oil Manifold

**Note:** This step applies ONLY to engines with STC.

a. Lubricate the o-rings with vegetable oil. Install the o-rings in the manifold.

b. Install the oil manifold, washers and capscrews. Begin tightening the capscrews at the center of the manifold and work towards the outer edges. Tighten the capscrews to 9.5 N•m [85 in-lb].

23. Connect the oil supply hose.

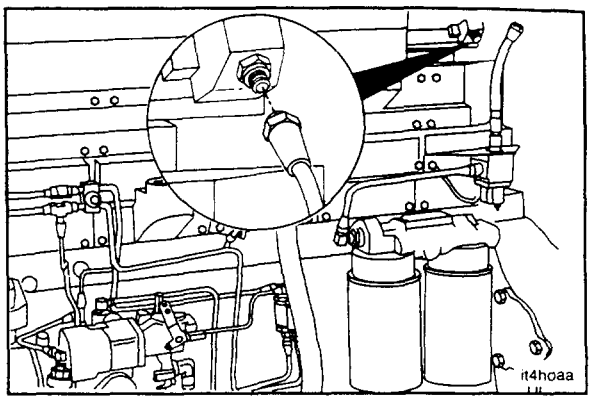


24. Install the aftercooler or intake manifold. Refer to Procedure 03-17.

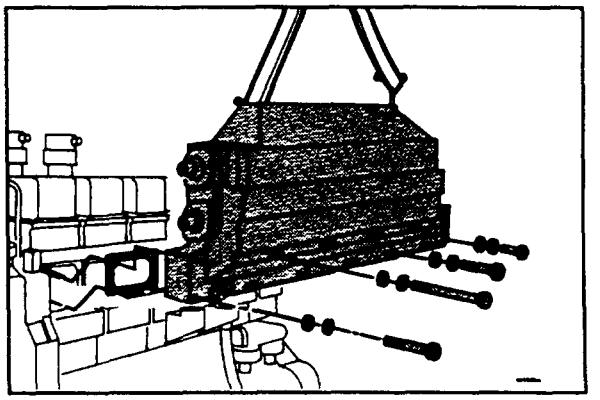

25. Install the exhaust manifold. Refer to Procedure 03-15.

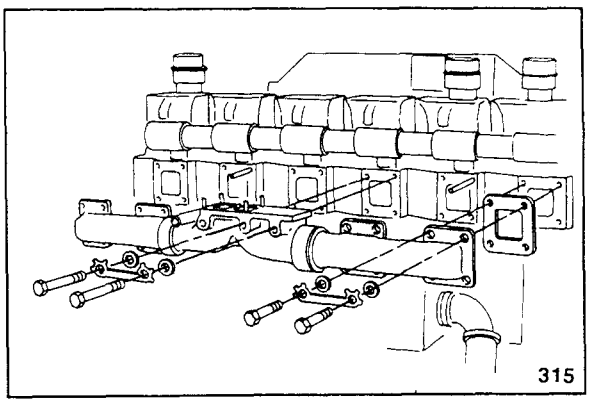


26. Install the turbocharger(s). Refer to Procedure 03-13 (KT or KTA) or 03-14 (KTTA).

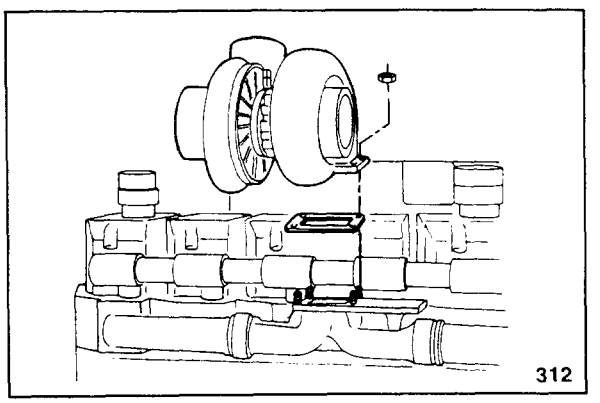

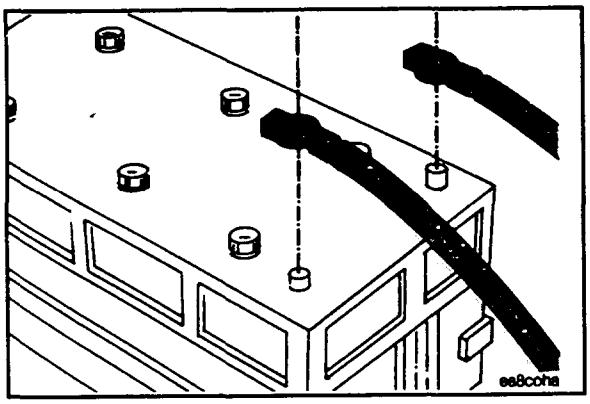


27. Connect the batteries or air starter supply line.

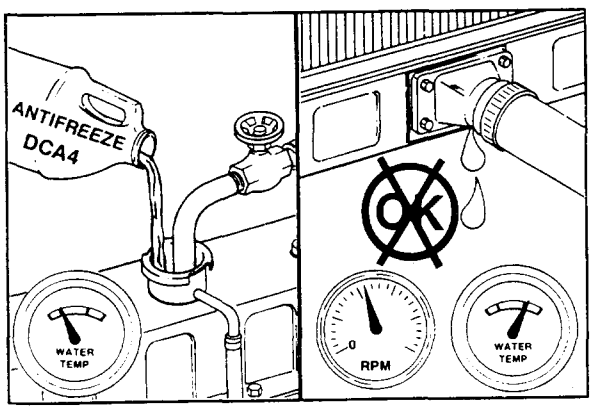


28. Fill the cooling system. Refer to Procedure 01-07.
29. Operate the engine to 70°C [160°F] coolant temperature and check for leaks.

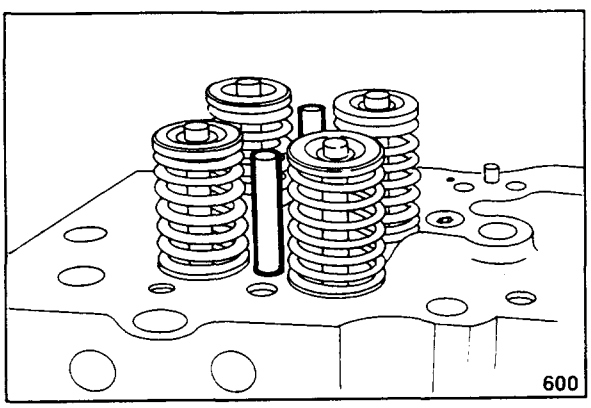


## Cylinder Head - Clean And Check For Reuse (07-15)

1. Clean the heads with solvent. Check for broken springs, bent crosshead guides, or other damage.

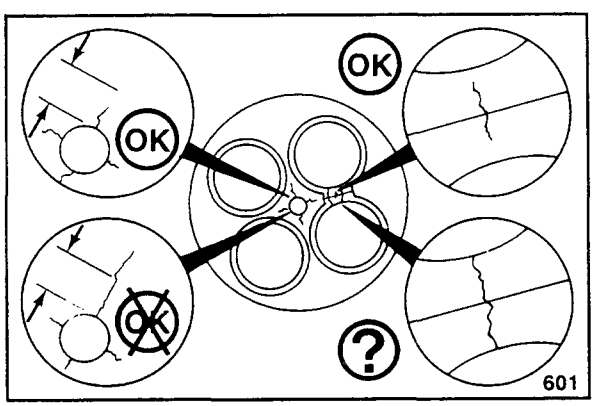


2. Check for cracks on the combustion surface.

   **Note:** If a crack around the injector bore is longer than 6 mm [1/4-inch], the cylinder head must be replaced.

   **Note:** Both ends of a crack between the valves must be visible. If one end of a crack extends into the valve seat bore (behind the valve seat), the condition of the cylinder is questionable. To be sure that the cylinder head is reusable, remove the valve and valve seat. Refer to the K19 Shop Manual.

3. Use a gauge block, Part No. ST-547, or equivalent and measure the valve depth.

   **Note:** If the valve depth is more than 0.51 mm [0.020 inch], the cylinder head must be rebuilt. Refer to the K19 Shop Manual.

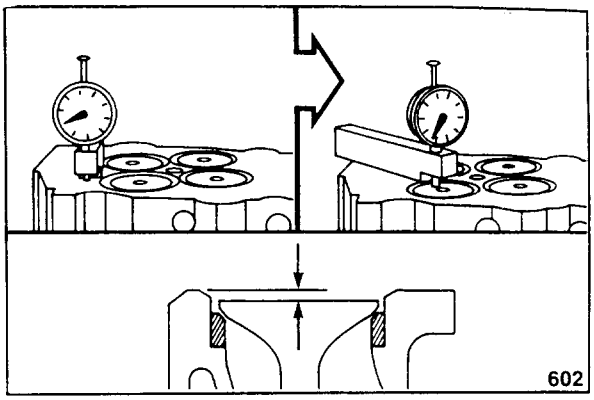


4. New cylinder heads contain a cut-out area (shaded) on the cylinder head combustion face. These heads can be mixed with cylinder heads that do not contain cut-outs on an engine.

   Cylinder heads without cut-outs are still available from Diesel ReCon for use on K19 engines.

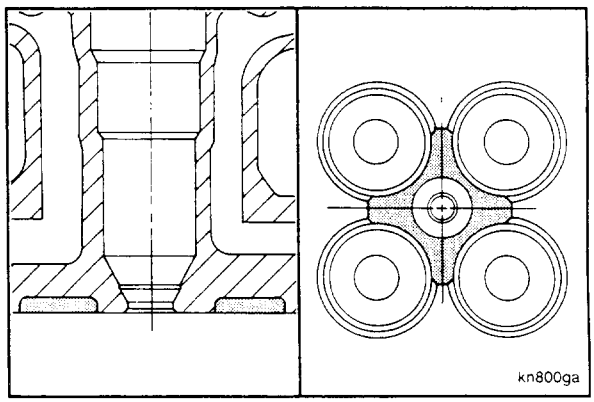


## Check Injector Protrusion

**Caution: Support the cylinder head to prevent damage to the injector tip that protrudes from the combustion face.**

Install the injector in the cylinder head. Install the injector hold down clamp.

Tighten the capscrews.

**Torque Value:** 16.2 N•m 145 in-lb

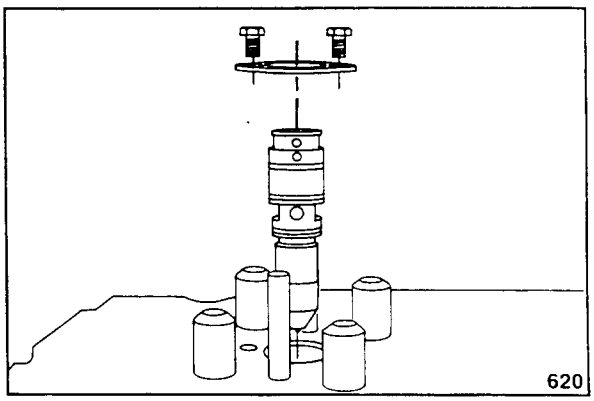

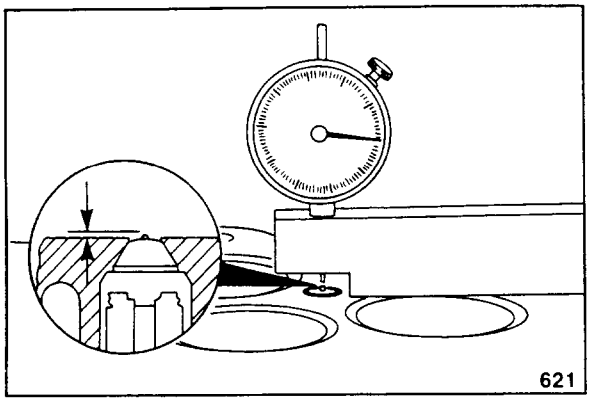


Use a gauge block, Part No. ST-547, or equivalent.

Turn the cylinder head over. Measure as shown.

| Injector Protrusion | | |
|---|---|---|
| mm | | in |
| 2.29 | MIN | 0.090 |
| 2.79 | MAX | 0.110 |

If the protrusion is **not** within specifications, use an oversize sealing ring. Sealing rings are available in various sizes.

| Injector Sealing Rings - MIN/MAX | | | |
|---|---|---|---|
| Wall Thickness | | Protrusion Change | |
| mm | in | mm | in |
| 0.343/0.419 | [0.0135/0.0165]* | 0.00 | [0.000] |
| 0.470/0.546 | [0.0185/0.0215] | 0.25 | [0.010] |
| 0.597/0.673 | [0.0235/0.0265] | 0.51 | [0.020] |
| 0.724/0.800 | [0.0285/0.0315] | 0.76 | [0.030] |

***Note:** The 0.343 mm to 0.419 mm [0.0135 inch to 0.0165 inch] is the standard sealing ring.

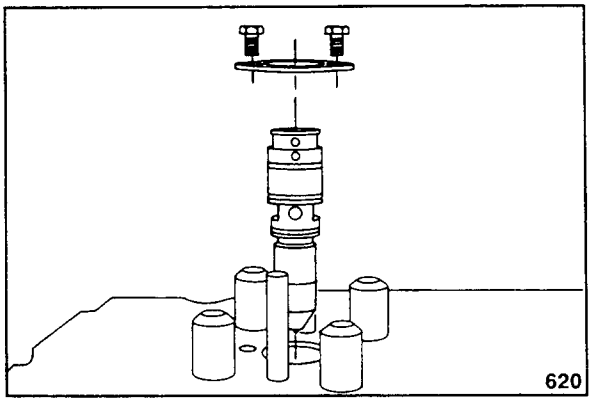


Turn the cylinder head over to the originial position. Remove the injector hold down clamp and the injector.

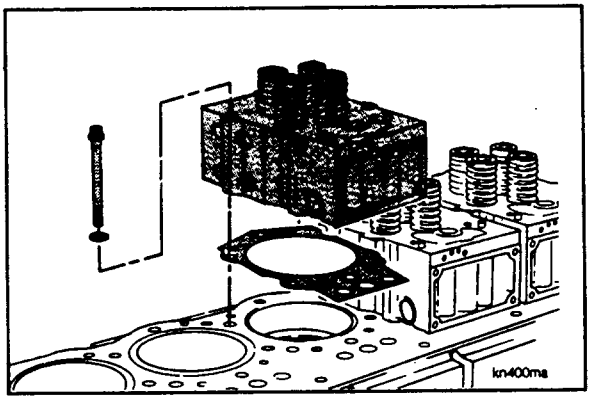


## Pressure Test Cylinder Head - Head Removed (07-16)

### Remove

Remove the cylinder head. Refer to Procedure 07-14.

**Caution: The valve springs are under compression. Use caution when using the valve spring compressor. Personal injury can result.**

Use a valve spring compressor, Part No. ST-448, or Part No. 3375960, or equivalent. Valve spring stand Part No. ST-1022 and the compressor plate, Part No. 3375043 can be used to compress all four springs at the same time.

Mark the valves for location prior to removal. The intake and exhaust valves are different. This practice will help with future installation identification.

Compress the valve spring and remove the following parts:

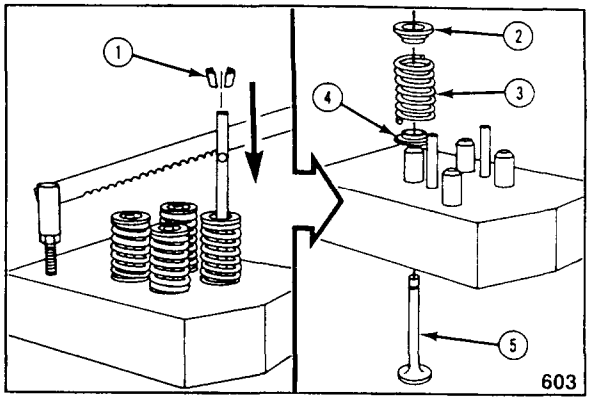


1. (1) Valve collets
2. (2) Valve spring retainer
3. (3) Valve spring

   Valve stem seal (if used)
4. (4) Valve spring guide
5. (5) Valve

Discard the collets.

## Pressure Test

1. Use a hydrostatic tester, Part No. ST-1012 with water test adapter plate, Part No. 3375070 to test the cylinder head.

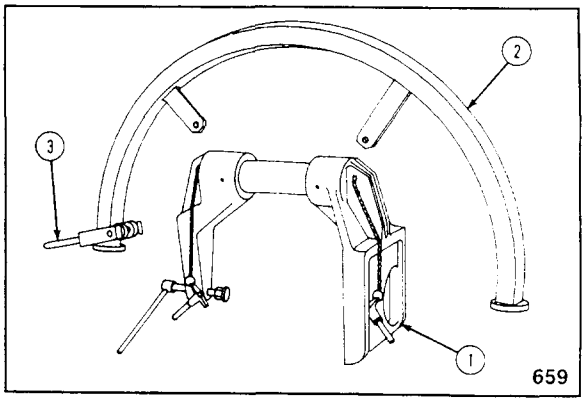


2. Remove one of the two plugs from the pressure regulator. Install the pressure gauge in the regulator.
3. Turn the adjusting knob on the regulator counterclockwise as far as it will turn.

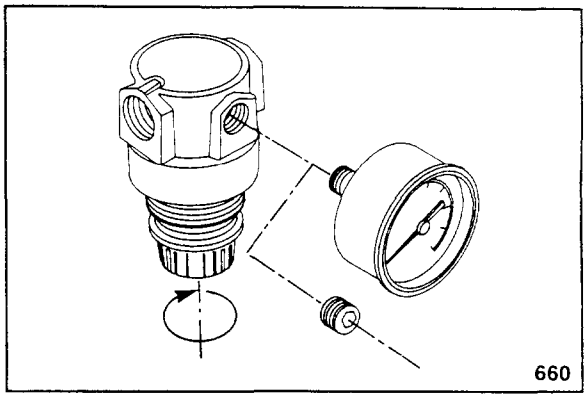

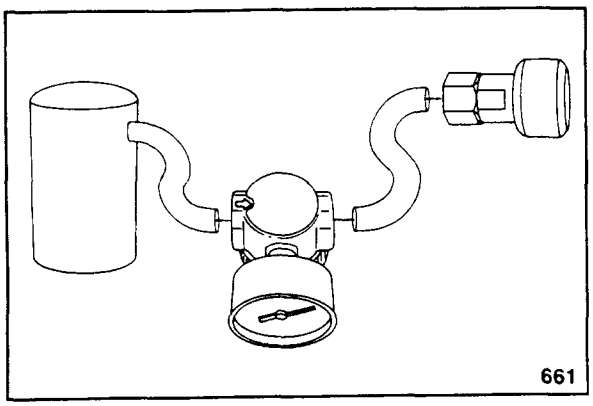


4. Install the pressure regulator between the air supply and the quick disconnect fitting.

   **Note:** The arrow on the top of the pressure regulator must point in the direction of the air flow (towards the quick disconnect fitting).

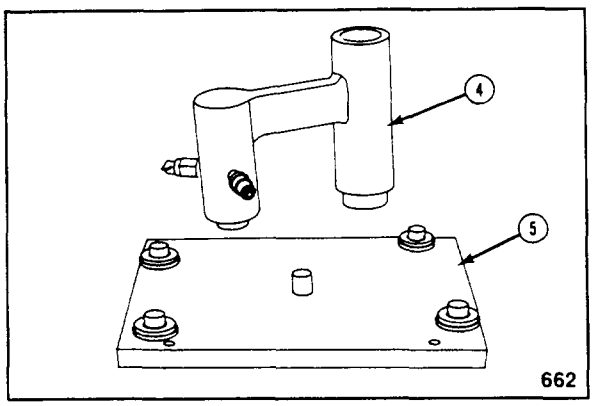


5. Use upper adapter plate (4), Part No. 3375071 and lower adapter plate (5) Part No. 3375070 to test the head.

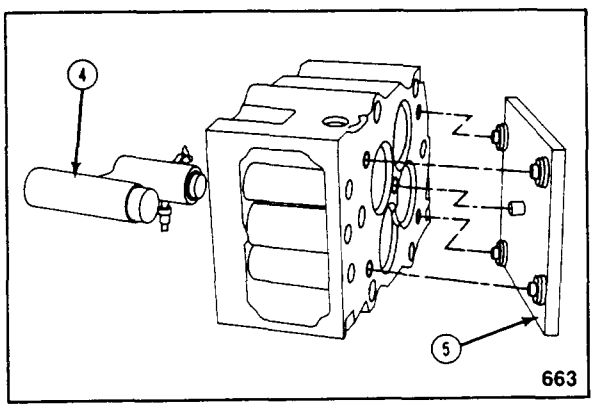


6. With the head as shown, assemble the adapter plates. The guide pins on the lower plate (5) must go in the water passages. The o-ring on the upper plate (4) makes a seal on the upper water passage. The other end of the plate goes into the injector bore.

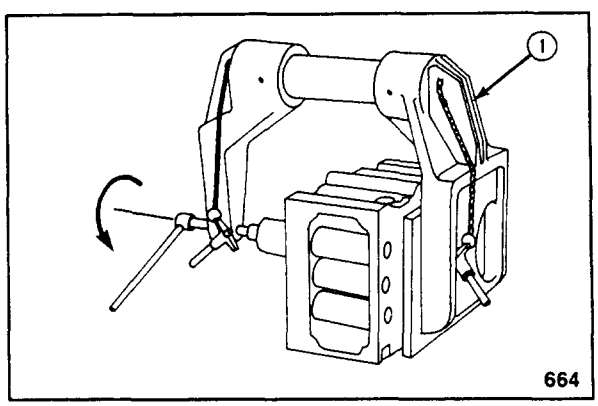


7. Put the clamping assembly (1) over the head and adapters. The guide pins on the clamp must go into the holes in the lower adapter plate.
8. Tighten the clamp on the head. Connect the air hose to the upper adapter fitting.

9. Attach the lifting arm to the clamp assembly with the lock pins.

**Note:** One mounting location on each piece is color coded red.

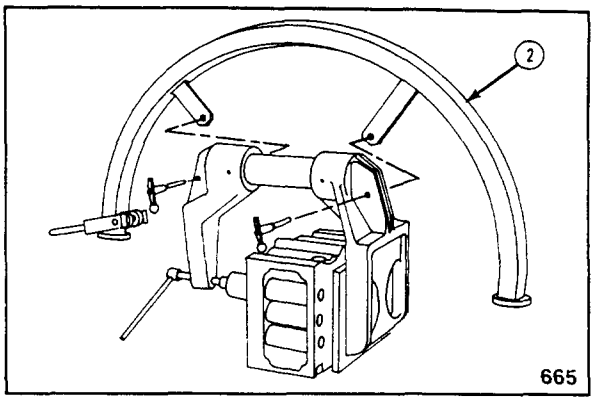


10. Adjust the air pressure to 552 kPa [80 psi]. Lower the head into a tank of water. Bubbles will indicate an air leak.

**Note:** If the cylinder head leaks, it must be repaired or replaced.

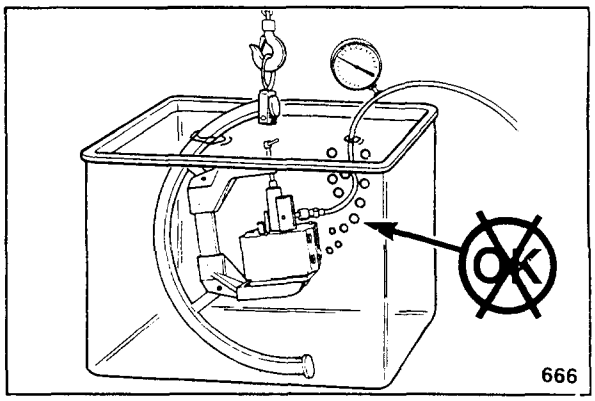


## Install

**Caution: The valve springs are under compression. Use caution when using the valve spring compressor. Personal injury can result.**

1. Use a valve spring compressor, Part No. ST-448, or Part No. 3375960, or equivalent. Valve spring stand Part No. ST-1022 and the compressor plate, Part No. 3375043 can be used to compress all four springs at the same time.
2. Install the following parts:

   (5) Valve

   (4) Valve spring guide

**Note:** Engines that operate at "IDLE" for extended periods of time, such as a locomotive application, require valve stem seals on the exhaust valves. Refer to the next step for installation instructions.

   (3) Valve spring

   Compress the valve spring and install the following parts:

   (4) Valve spring retainer

   (5) New valve collets

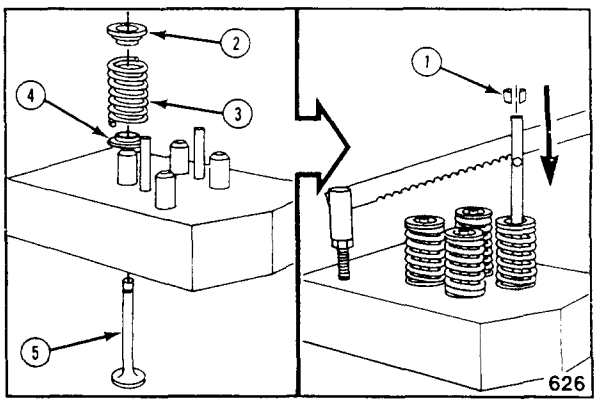

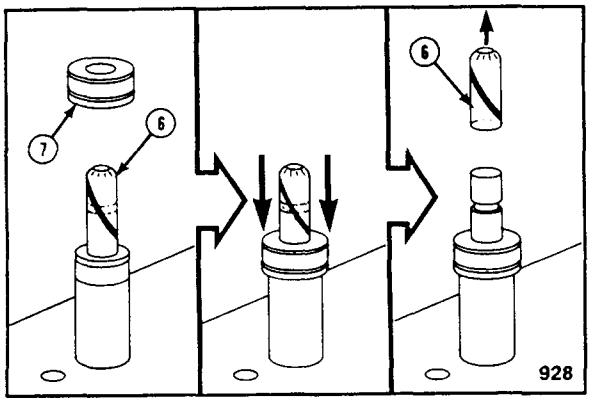


**Note:** The Service valve stem seals (7) include an installation cap (6).

Install the cap (6) on the valve stem. Push the seal (7) over the cap and on the valve guide. Push the seal down on the guide until the lower spring is in the groove on the guide.

Remove the cap.

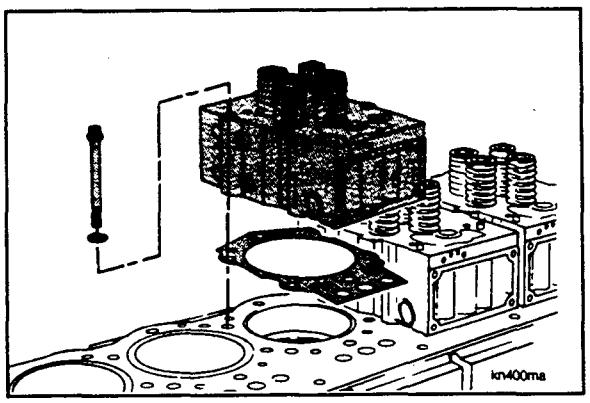


Install the cylinder head and related components. Refer to Procedure 07-14.

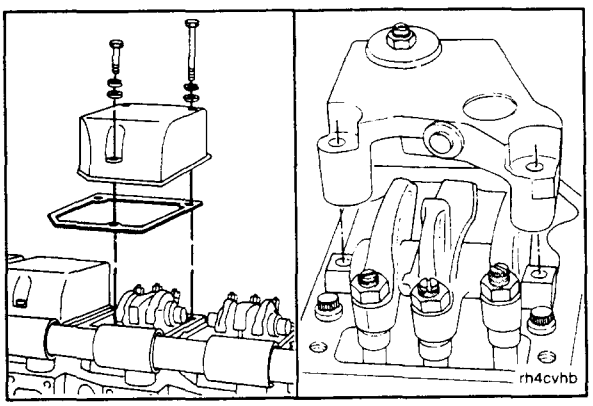


## Cam Follower Assembly - Replace (07-17)

### Remove

1. Remove the rocker lever cover. Refer to Procedure 07-04.
2. Remove the Jacobs engine brake. Refer to Procedure 07-07.

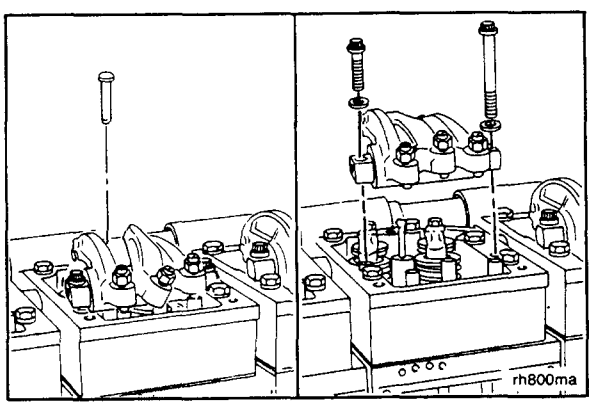


3. Remove the rocker levers and the STC injector link. Refer to Procedure 07-09.

**Note:** It is good service practice to mark the push rods so they can be reinstalled in their original location.

4. Remove the push rods and the standard injector link.

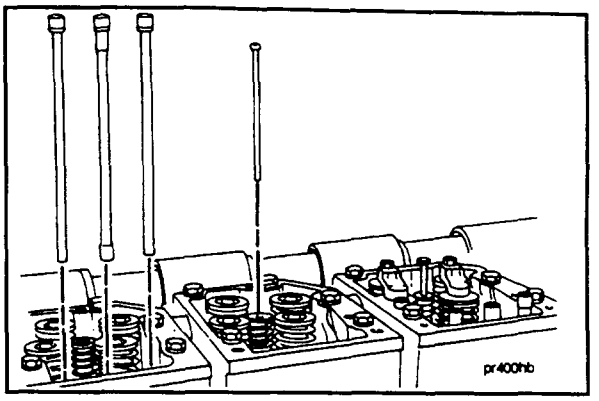


**Note:** Some cam follower covers cannot be removed until other parts, such as the wiring harness, fuel tubing, and the crankcase vent hose (21) are removed.

5. Remove the cam follower cover. Remove and discard the gasket.

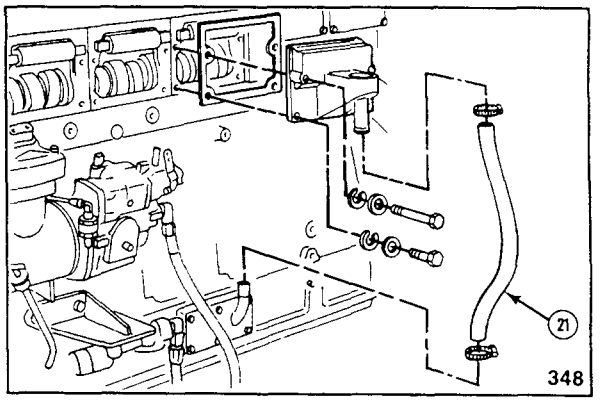


**Note:** The cam follower mounting capscrews are a special slotted design. Tag them for future identification.

6. Remove the cam follower assembly. Pull straight out until the shaft is off the ring dowels.

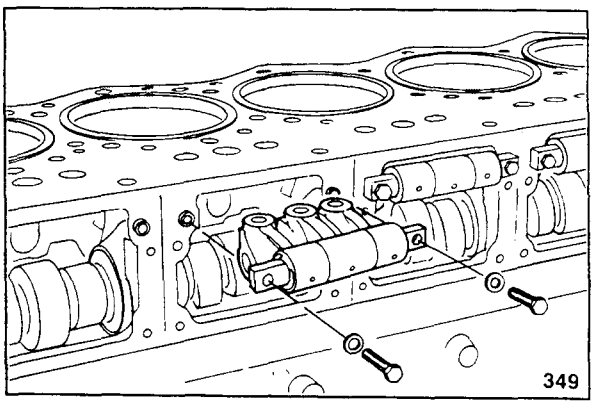


## Check For Reuse

1. Clean and inspect the cam follower assembly for reuse. Refer to 07-18.

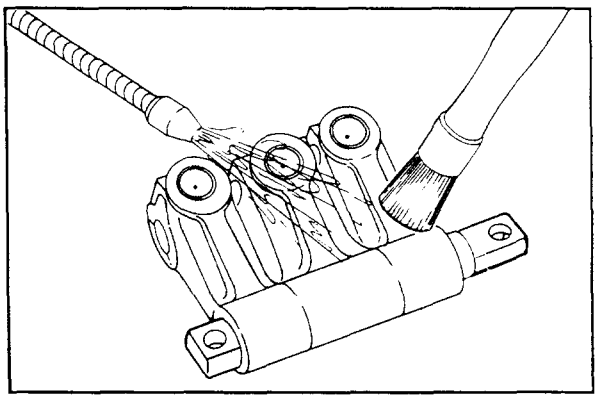

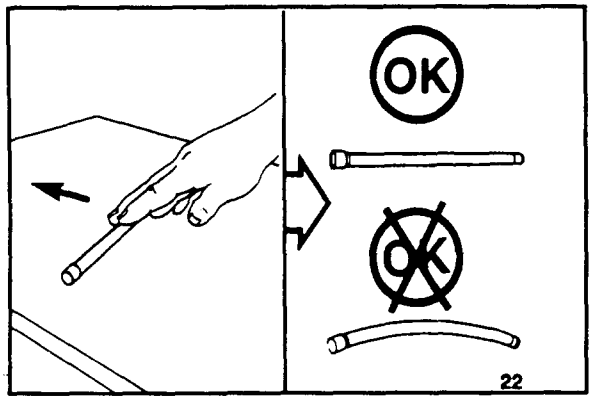


2. Clean and check the push rods. Check to be sure the rod is straight. View the rod while rolling it across a level surface.

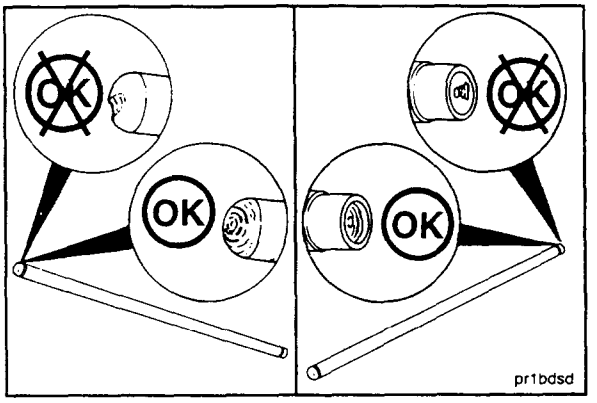


3. Check both ends of the push rods for wear or damage.

**Note:** The cam follower socket must be replaced if the push rod is worn or damaged in the area where it contacts the socket. Replace both the rocker lever adjusting screw and push rod if the socket surface in the rod or on the adjusting screw is damaged.

**Note:** A loose socket end retainer on a solid push rod is acceptable for reuse as long as the retainer is not in danger of separating from the rod.

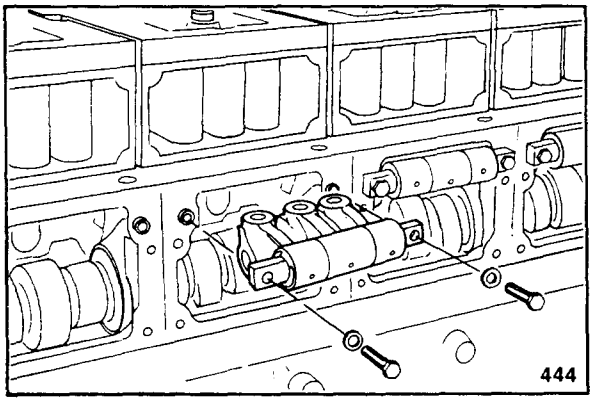


## Install

**Note:** Service replacement cam followers are coated with a heavy preservative to prevent rust. This preservative must be removed completely with solvent before the parts are installed on the engine.

**Note:** The cam follower mounting capscrews are special. They have a slot that allows oil to flow to the cam follower assembly. The oil drilling intersects with the rear capscrew hole. Failure will result if standard capscrews are used.

1. Lubricate the camshaft and cam followers with engine oil. Install the cam follower assembly . The shaft must fit on both ring dowels.
2. Install the capscrews and tighten them to the values listed below.

| Cam Follower Capscrew Mounting Torque | | |
|---|---|---|
| N•m | | ft-lb |
| 39 | MIN | 29 |
| 42 | MAX | 31 |

**Note:** Only one of the cam follower covers contains an oil drainback tube. Install the cam follower cover for the crankcase vent hose in the No. 4 position.

**Note:** Two different types of gaskets have been used on the K19 engine. Gaskets with a raised bead of sealant material must be installed so that the bead touches the cover.

3. Gaskets that do not have a bead of sealant are manufactured from a material that will enlarge when exposed to engine oil. Do not use sealant on this type gasket. These gaskets must be installed dry.
4. Install the gasket, cover, washer and capscrews. Tighten the capscrews to 25 N•m [20 ft-lb].

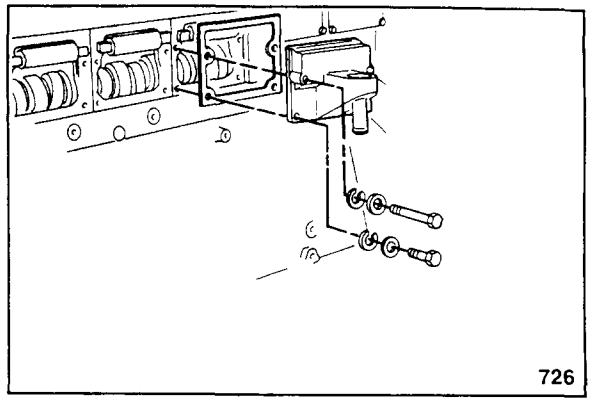


**Note:** The push rods must be seated correctly in the cam followers.

**Note:** The injector push rods are thinner in the middle. The valve push rods are the same for both intake and exhaust.

5. Lubricate the sockets in the cam followers with engine oil.
6. Install the push rods and the standard injector link.

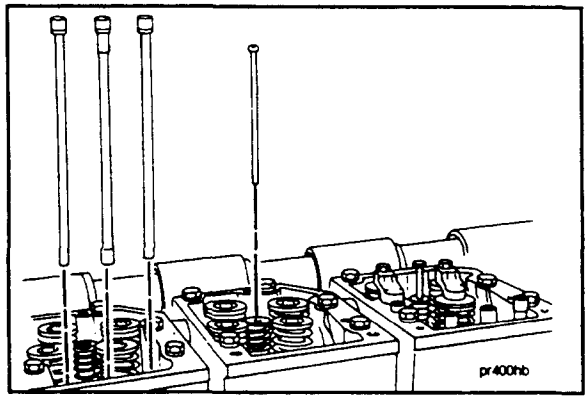


7. Install the rocker levers and the STC injector link. Refer to Procedure 07-09.

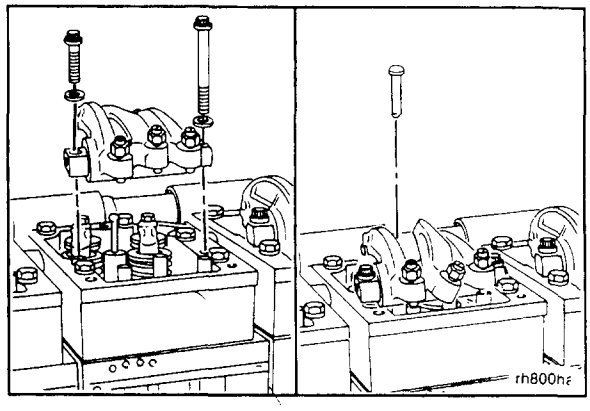


8. Install the Jacobs engine brake. Refer to Procedure 07-07.

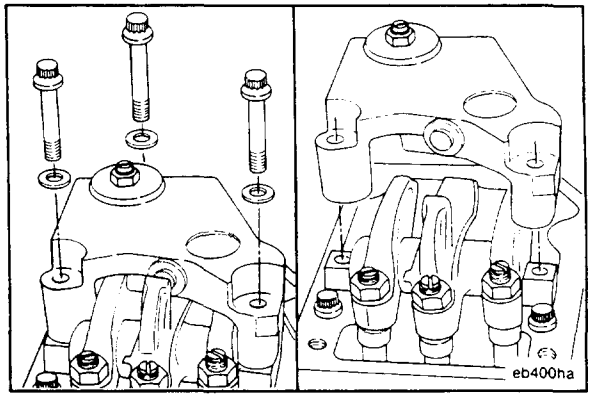

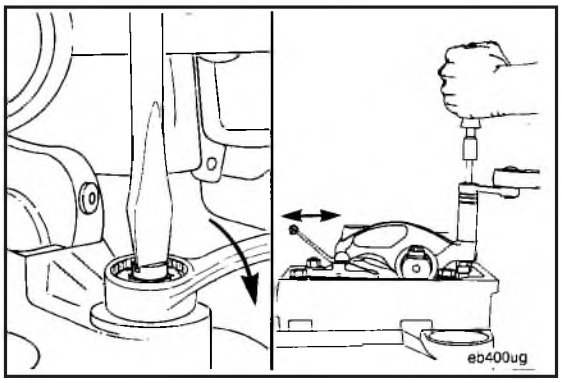


9. Adjust the Jacobs engine brake. Refer to Procedure 07-06.
10. Adjust the valves and injectors. Refer to Procedure 07-05.

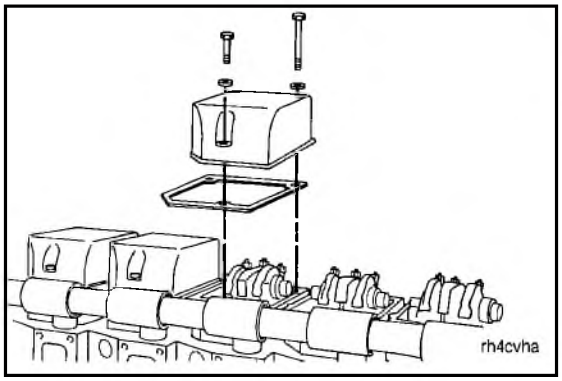


11. Install the rocker lever cover and all related parts. Refer to Procedure 07-04.

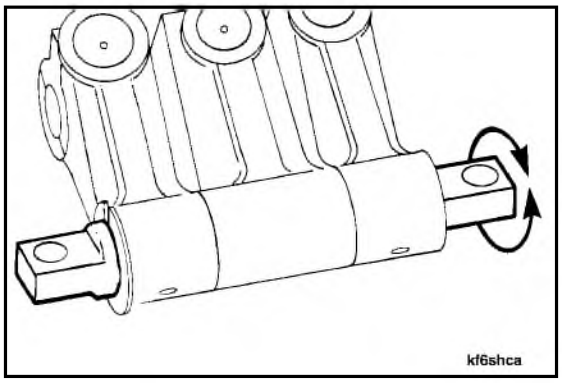


## Cam Follower Assembly - Clean And Check For Reuse (07-18)

### Check For Reuse

1. Clean and check the parts for reuse. The shaft must rotate easily. If resistance is apparent, disassemble and check for burrs on the shaft.

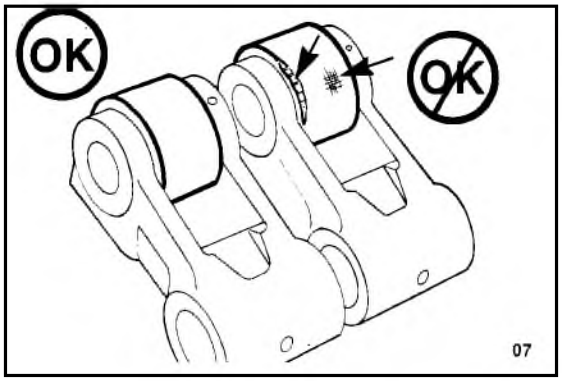


2. Check the cam follower for reuse. The follower must be replaced or rebuilt if any damage is present. Refer to the K19 Shop Manual.

3. The roller must rotate easily. Check roller clearance.

| Roller Clearance | | |
|---|---|---|
| mm | | in |
| (1) 0.23 | MIN | 0.009 |
| 0.61 | MAX | 0.024 |
| (2) 0.076 | MIN | 0.0030 |
| 0.114 | MAX | 0.0045 |

**Note:** If clearances do not meet specifications, rebuild or replace the cam follower. Refer to the K19 Shop Manual.

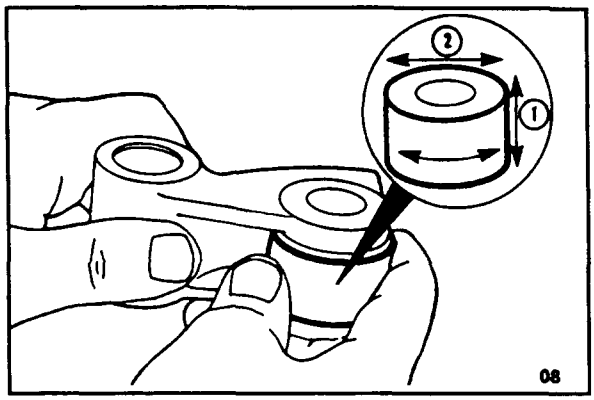


## Injection Timing - General Information (07-19)

The injection timing is the relative measurement of the distance remaining between the injector plunger and the injector cup when the piston is 5.16 mm [0.2032 inch], or 19 degrees before TDC on the compression stroke.

Injector timing is expressed by the amount of push rod travel remaining.

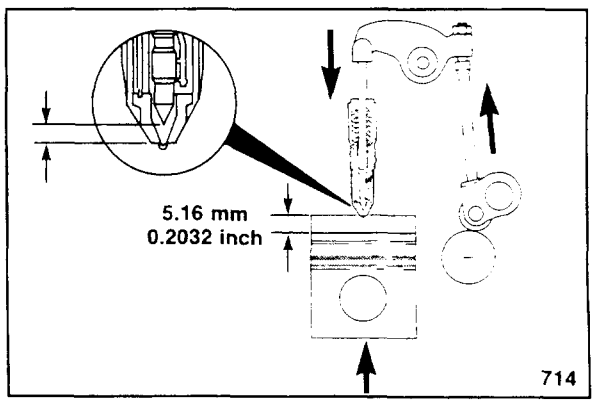


The injector timing code appears on the engine dataplate. Codes are alphabetic letters that relate to a numerical specification.

Specifications can be found in this manual, the CPL Manual, the K19 Specifications Manual, or the K19 Shop Manual.

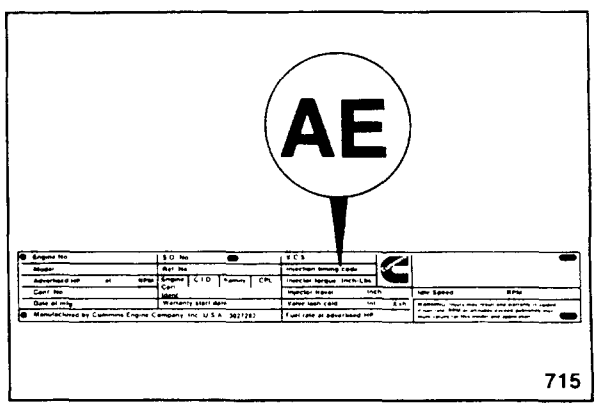


The timing codes and specifications for K19 engines are shown.

| K-19 Timing Codes | | |
|---|---|---|
| Code | Push Rod Travel mm (in.) | Tolerence mm (in.) |
| AE | 2.74 (0.108) | ± .05 (0.002) |
| CI | 2.90 (0.114) | ± .05 (0.002) |
| AM | 3.00 (0.118) | ± .05 (0.002) |
| AJ | 3.20 (0.126) | ± .05 (0.002) |
| CU | 3.25 (0.128) | ± .05 (0.002) |
| CL | 3.66 (0.144) | ± .05 (0.002) |

874

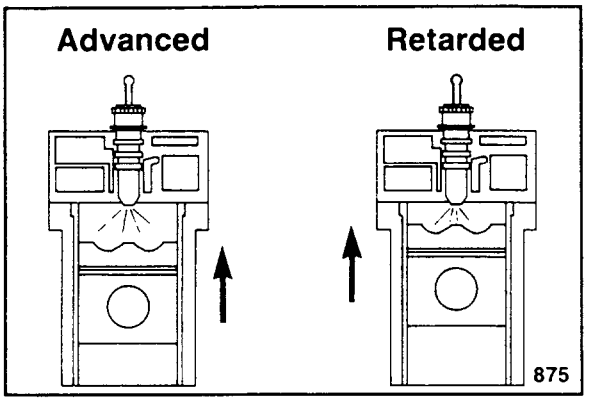


The next six frames are a brief review of injector timing and how it can be adjusted.

Advanced timing means the fuel is injected earlier into the cylinder during the compression stroke. Retarded timing means the fuel injection occurs closer to TDC in the cylinder.

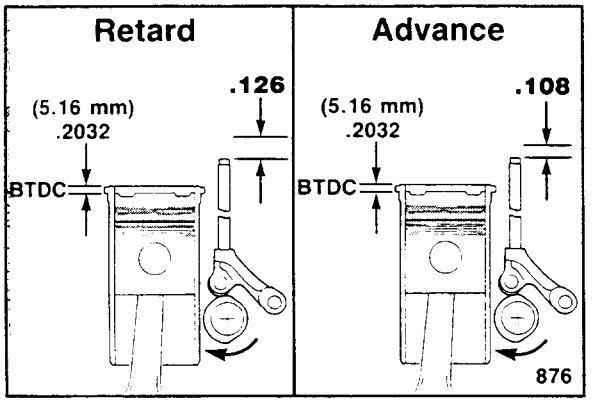


The amount of push rod travel determines the time of fuel injection in relation to the piston position.

The higher the numerical value of the push rod travel remaining indicates a greater degree of retarded or slow timing.

The lower the numerical value of the push rod travel remaining indicates a greater degree of advanced or fast timing.

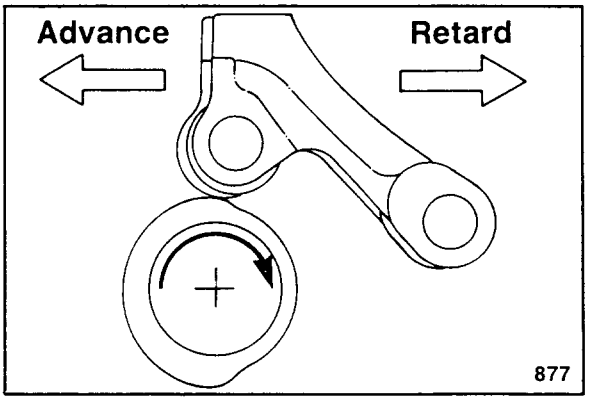


Injector timing changes are accomplished by advancing or retarding the cam follower action in relation to the piston position.

This is accomplished by changing the orientation of the camshaft lobe to the cam follower using different camshaft gear keys.

Gear Train Timing (index mark alignment) Always Remain The Same.

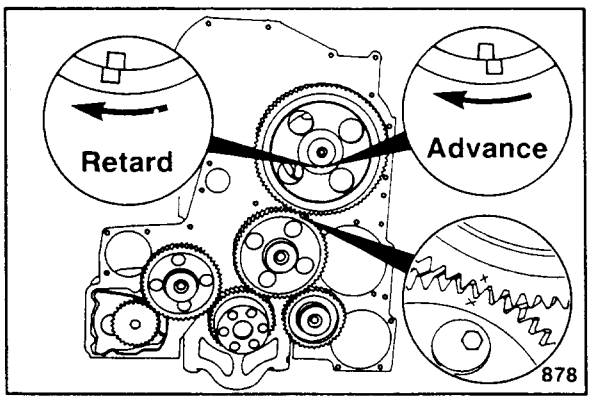


The camshaft key provides a means of indexing the camshaft with the gear.

Offset keys allow the camshaft profile to be rotated slightly while the gear train timing remains the same.

The more the top of the offset is moved in the direction of the camshaft normal rotation, the more the injection timing will be retarded. The push rod travel numerical value will increase.

**Note:** The direction of normal rotation on a K19 engine crankshaft is clockwise as viewed from the front.

Offset keys can be identified by measuring the offset and referring to the following chart.

**Note:** Each 0.025 mm [0.001 inch] of offset will cause a 0.0127 mm [0.0005 inch] change in the push rod travel from a straight key.

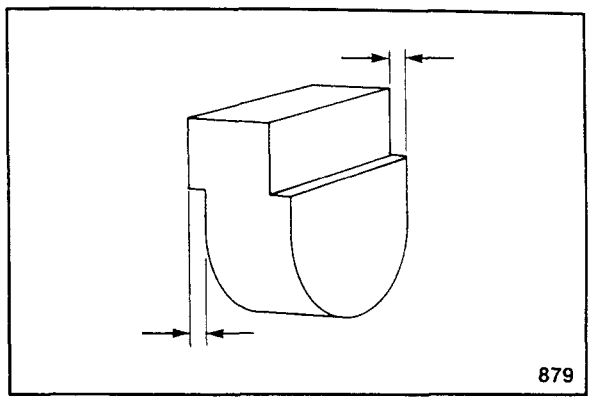


Use the recommended key shown if the camshaft, gear, or the timing code has been changed.

If checking or setting the injection timing, it is recommended to use a testing gear. A testing gear is a camshaft gear that has been modified to provide a slip-fit on the camshaft.

| Timing Code | Recommended Key | Direction of Offset |
|---|---|---|
| AE | 216782 | Opposite Cam Rotation |
| CI | 200711 | With Cam Rotation |
| AM | 216782 | With Cam Rotation |
| AJ | 200706 | With Cam Rotation |
| CU | 3000492 | With Cam Rotation |
| CL | S-302 | None |

880

## Measure The Injection Timing (07-20)

1. Use the injection timing tool, Part No. 3375522. The indicators (1) and (2) are identical.

   a. Push rod travel indicator
   b. Piston travel indicator
   c. Piston plunger support assembly
   d. Push rod plunger support
   e. Hold-down adapter
   f. Extension assembly (adapter wrench)
   g. Indicator stem extension

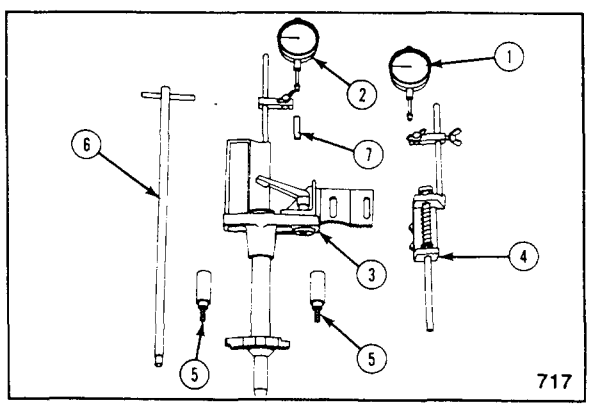


**Note:** The push rod plunger support assembly alignment is critical.

2. Install the push rod plunger support (4) in the outside slot in the piston plunger support (3).

   Align the push rod plunger support with the mark. Tighten the capscrew.

3. Install the indicators (1) and (2) on the posts. Turn the indicators so they are not over the plungers.

   Install the stem extension on the piston travel indicators.

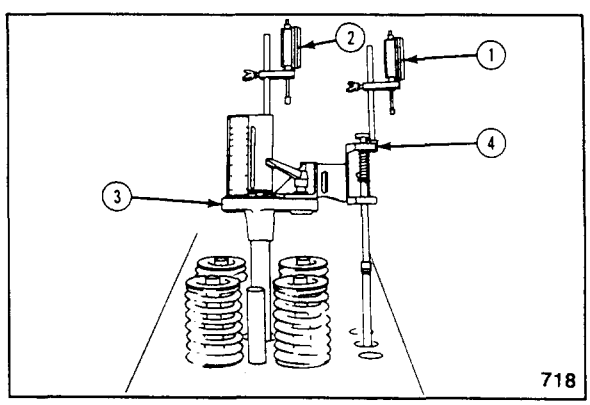

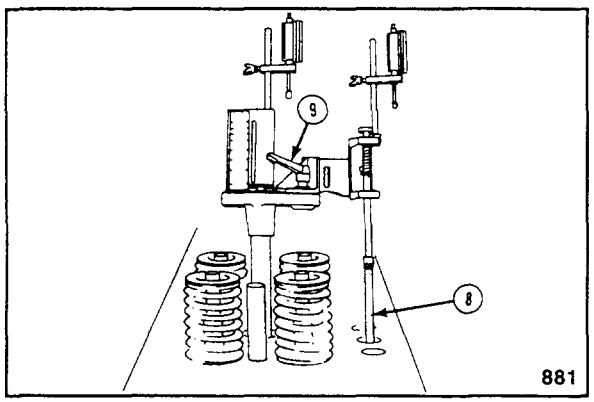


4. Install the injector push rod (8).
5. Install the timing tool in the injector bore. Install the hold-down adapter.

   Align the push rod plunger and the rod to be sure they are straight.

   Tighten the support lock (9).

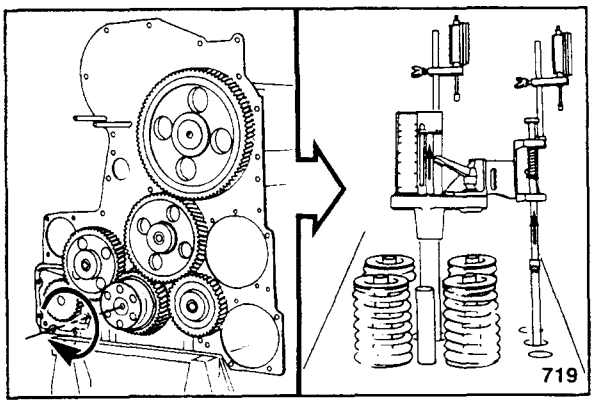


## Put The Engine On The Compression Stroke

**Note:** Use only the crankshaft to rotate the engine. The use of the gears will result in false measurement. Gear lash must be closed up in the direction of normal rotation (crankshaft clockwise).

**Note:** Three guide bolts equally spaced in front of the crankshaft will help rotate the engine.

1. With the engine in the compression stroke, turn the crankshaft in the direction of normal rotation and observe both timing tool plungers.

   Both plungers will begin moving upward when the cylinder is on the compression stroke. The indicators will be rotating in a clockwise direction.

   If both indicators are not rotating in a clockwise direction, the engine is on the exhaust stroke. Rotate the crankshaft one revolution to get to the compression stroke.

## Establish Top Dead Center (TDC)

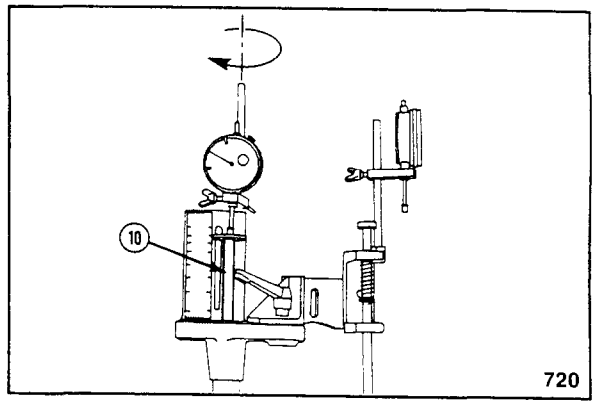


1. Slowly rotate the crankshaft in the direction of normal rotation while observing the piston plunger (10). The plunger will move upward, STOP, then begin to move downward. The STOP point of the plunger is TDC.
2. Rotate the engine opposite the direction of normal rotation until the plunger begins to move downward. The cylinder is now Before Top Dead Center (BTDC) slightly.
3. Turn the indicator so that the stem is touching the plunger.

   Carefully lower the indicator until it bottoms out. Raise the indicator when the needle has turned a minimum of three revolutions (0.300 inch). Lock the indicator in position.
4. Slowly turn the crankshaft in the direction of normal rotation until the indicator needle STOPS turning clockwise (TDC). Adjust the indicator to "ZERO".

**Note:** Always ZERO at TDC with the crankshaft having just been rotated in the direction of normal rotation.

5. Slowly and carefully rotate the crankshaft backward and forward until the needle always STOPS at "ZERO" before reversing the direction to indicate the piston is After Top Dead Center (ATDC).

## "Zero" Setting Of The Push Rod Indicator

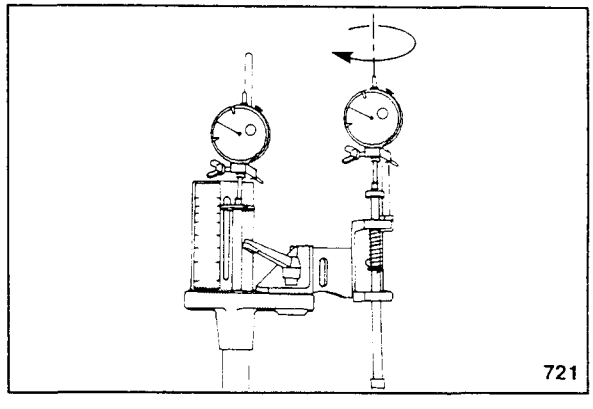


1. Turn the push rod indicator so that the stem touches the plunger.

   Carefully lower the indicator until it bottoms out. Raise the indicator when the needle has turned a minimum of three revolutions (0.300 inch).

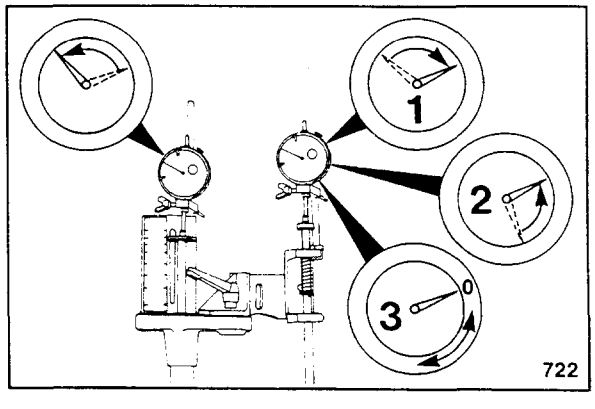


2. Slowly turn the crankshaft in the direction of normal rotation until the push rod indicator STOPS (1), momentarily reverses direction (2) [this is the crush nose on the camshaft],and STOPS again (3). The cam follower is now on the outer base circle of the camshaft. The piston is now approximately 45 degrees ATDC.

**Note:** It is important to record the amount of travel remaining in the push rod travel indicator for later reference.

3. Carefully lower the push rod travel indicator until it bottoms out. Raise the indicator approximately one-fourth of a revolution (0.025 inch). LOCK the indicator in position.

   Set the indicator at "ZERO".

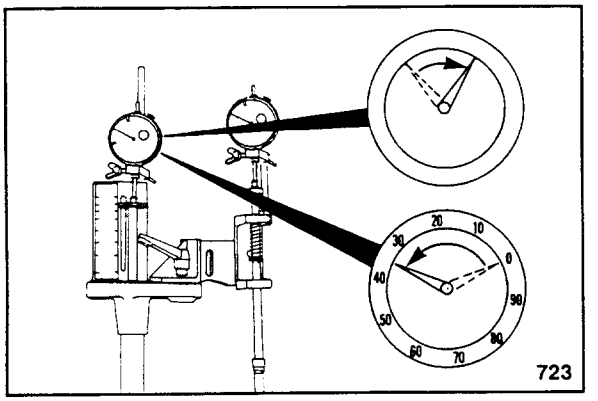


## Set The Piston At 0.2032 Inch BTDC

1. Observe the piston travel indicator as you slowly rotate the crankshaft opposite the direction of normal rotation.

   STOP rotating the crankshaft when the piston travel indicator indicates the piston is at TDC ("ZERO").

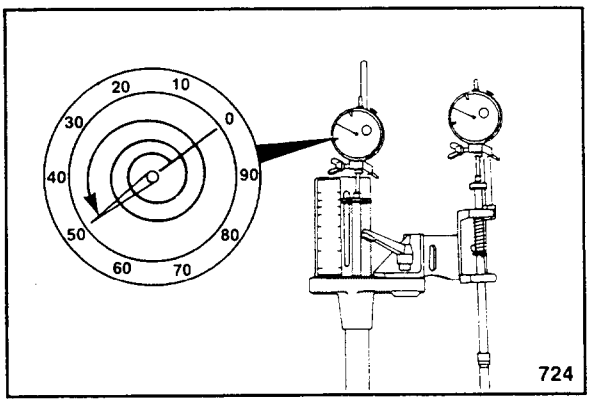


**Note:** The crankshaft must be turned slowly to accurately count the indicator revolutions.

2. Turn the crankshaft opposite the direction of normal rotation until the indicator needle moves two and one-half revolutions (0.250 inch).

   The piston is now 0.250 inch BTDC.

**Note:** ONLY move the piston to 0.2032 inch BTDC by turning the crankshaft in the direction of normal rotation. If you accidently turn the crankshaft too far, you must turn the crankshaft opposite the direction of normal rotation MORE than 0.2032 inch BTDC. Then very slowly turn the crankshaft in the direction of normal rotation until the indicator indicates that the piston is 0.2032 inch BTDC.

**Note:**Remember that all K19 injection timing specifications are more than one indicator revolution (0.100 inch).

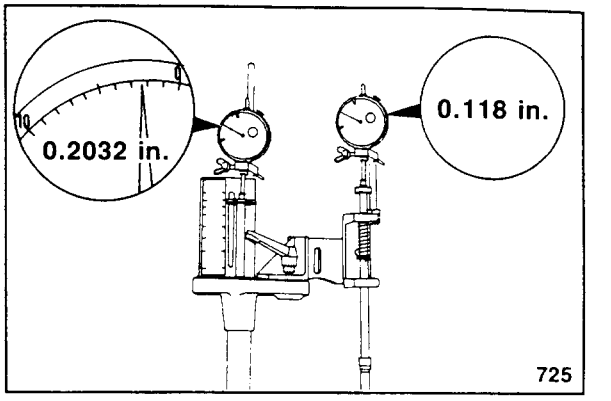


3. Read the push rod travel indicator counterclockwise from "ZERO". This is the injection timing measurement to compare to the specification. An example of 0.118 inch is shown.

   If you are not sure of the number of push rod indicator revolutions, check by carefully lifting the indicator stem until the indicator has bottomed out. Lower the stem the amount of excess travel you set in Step 14. Lower the stem to the plunger. Read the indicator.

4. If the injection timing is within specification and you are using a slip-fit gear, install the standard gear. Refer to Procedure 07-40. Repeat the injection timing procedure after the camshaft gear has cooled.

5. If the injection timing is not within specification, repeat the measurement procedure to check the tool set-up and the ZERO settings.

6. If the timing is still not within specification, the camshaft key must be changed. Refer to Procedure 07-40 for instructions to remove the camshaft gear.

   Record the orientation of any offset of the key. Use the following worksheet to determine an alternate key.

**Note:** You must confirm the timing measurement after changing the key.

Answer each of the following questions in the spaces provided. The answers to the questions and the use of Tables A, B, and C will determine the timing key required to correct the injection timing.

A working example is attached for your review to illustrate the use of this worksheet.

1. What is the current timing? _____

2. What is the timing code? _____

3. What is the timing specification for this code? (±0.002 inch) _____

4. Is the current timing a larger or smaller number than the specification? _____

   If larger, advance the timing. _____

   If smaller, retard the timing. _____

5. What is the difference between the current timing (answer to Question 1) and the specification (answer to Question 3). _____

6. Does the offset of the current key point in the same or opposite direction that the camshaft normally rotates? _____

7. Use TABLE A to determine the current key part number.

   * What is the amount of offset of the current key? _____

   * What is the part number of the current key? _____

TABLE A

| Timing Key (Part No.) | Offset mm | Offset in |
|---|---|---|
| S-302 | None | [ None ] |
| 216294 | 0.089 | [0.0035] |
| 200711 | 0.179 | [0.0070] |
| 216782 | 0.279 | [0.0110] |
| 200709 | 0.381 | [0.0150] |
| 200704 | 0.500 | [0.0197] |
| 200708 | 0.584 | [0.0230] |
| 3000491 | 0.686 | [0.0270] |
| 200706 | 0.833 | [0.0328] |
| 3000492 | 0.914 | [0.0360] |
| 200714 | 0.991 | [0.0390] |
| 3000493 | 1.092 | [0.0430] |
| 3000494 | 1.194 | [0.0470] |
| 3000495 | 1.295 | [0.0510] |

8. Use TABLE B to determine how to use TABLE C. Circle or check the appropriate answer.

TABLE B

| Answer to Question 4 | Answer to Question 6 | Beginning Point on TABLE C | |
|---|---|---|---|
| Advance | Same | Top of column | _____ |
| Advance | Opposite | Bottom of column | _____ |
| Retard | Same | Bottom of column | _____ |
| Retard | Opposite | Top of column | _____ |

9. Answer the following questions BEFORE using TABLE C to determine the new timing key part number.

   * Find the current key part number listed at the TOP of the column on TABLE C.

   * Move up or down the column (the answer to question 8). Do not pass 0.000 (ZERO)*.

   *If you pass 0.000 (ZERO), you will be choosing a key that does the opposite of what you want it to do.

   STOP when you locate the number nearest (±0.002 inch) to the required change in push rod travel (answer to Question 5). Remain in this row. Move your finger to the right. The result is the New Key Part No. and the Direction of Offset the timing key must point.

   What is the part number of the new key? _____

   Note: Each column on TABLE C indicates the change in the push rod travel. The change will result if the key at the top of the column is removed and the new key indicated in the second column from the right is installed. The Direction of Offset will be pointing as indicated in the last column to the right on TABLE C.

## TABLE C

| S-302 | 200704 | 200706 | 200708 | 200709 | 200711 | 200714 | 216294 | 216782 | 3000491 | 3000492 | 3000493 | 3000494 | 3000495 | New Key Part No. | New Key Direction of Offset |
|---|---|---|---|---|---|---|---|---|---|---|---|---|---|---|---|
| 0.0256 | 0.0351 | 0.0411 | 0.0366 | 0.0326 | 0.0289 | 0.0441 | 0.0273 | 0.0311 | 0.0391 | 0.0436 | 0.0471 | 0.0491 | 0.0512 | 3000495 | Opposite |
| 0.0235 | 0.033 | 0.039 | 0.0345 | 0.0305 | 0.0268 | 0.042 | 0.0252 | 0.029 | 0.037 | 0.0415 | 0.045 | 0.0471 | 0.0491 | 3000494 | Opposite |
| 0.0215 | 0.031 | 0.037 | 0.0325 | 0.0285 | 0.0248 | 0.040 | 0.0232 | 0.027 | 0.035 | 0.0395 | 0.043 | 0.0441 | 0.0471 | 3000493 | Opposite |
| 0.0185 | 0.028 | 0.034 | 0.0295 | 0.0255 | 0.0218 | 0.037 | 0.0202 | 0.024 | 0.032 | 0.0365 | 0.040 | 0.042 | 0.0441 | 200714 | Opposite |
| 0.018 | 0.0275 | 0.0335 | 0.029 | 0.025 | 0.0213 | 0.0365 | 0.0197 | 0.0235 | 0.0315 | 0.036 | 0.0395 | 0.0415 | 0.0436 | 3000492 | Opposite |
| 0.0155 | 0.025 | 0.031 | 0.0265 | 0.0225 | 0.0188 | 0.034 | 0.0172 | 0.021 | 0.029 | 0.0335 | 0.037 | 0.039 | 0.0411 | 200706 | Opposite |
| 0.0135 | 0.023 | 0.029 | 0.0245 | 0.0205 | 0.0168 | 0.032 | 0.0152 | 0.019 | 0.027 | 0.0315 | 0.035 | 0.037 | 0.0391 | 3000491 | Opposite |
| 0.011 | 0.0205 | 0.0265 | 0.022 | 0.018 | 0.0143 | 0.0295 | 0.0127 | 0.0165 | 0.0245 | 0.029 | 0.0325 | 0.0345 | 0.0366 | 200708 | Opposite |
| 0.0095 | 0.019 | 0.025 | 0.0205 | 0.0165 | 0.0128 | 0.028 | 0.0112 | 0.015 | 0.023 | 0.0275 | 0.031 | 0.033 | 0.0351 | 200704 | Opposite |
| 0.007 | 0.0165 | 0.0225 | 0.018 | 0.014 | 0.0103 | 0.0255 | 0.0087 | 0.0125 | 0.0205 | 0.025 | 0.0285 | 0.0305 | 0.0326 | 200709 | Opposite |
| 0.0055 | 0.015 | 0.021 | 0.0165 | 0.0125 | 0.009 | 0.024 | 0.0072 | 0.011 | 0.019 | 0.0235 | 0.027 | 0.029 | 0.0311 | 216782 | Opposite |
| 0.0033 | 0.0128 | 0.0188 | 0.0143 | 0.0103 | 0.006 | 0.0218 | 0.005 | 0.009 | 0.0168 | 0.0213 | 0.0248 | 0.0268 | 0.0289 | 200711 | Opposite |
| 0.0017 | 0.0112 | 0.0172 | 0.0127 | 0.0087 | 0.0051 | 0.0202 | 0.0034 | 0.0072 | 0.0152 | 0.0197 | 0.0232 | 0.0252 | 0.0273 | 216294 | Opposite |
| 0.000 | 0.0095 | 0.0155 | 0.011 | 0.007 | 0.003 | 0.0185 | 0.0017 | 0.006 | 0.0135 | 0.018 | 0.0205 | 0.0235 | 0.0256 | S-302 | N/A |
| 0.0017 | 0.0078 | 0.0138 | 0.0093 | 0.0053 | 0.0016 | 0.0168 | 0.000 | 0.0038 | 0.0118 | 0.0163 | 0.0198 | 0.0218 | 0.0239 | 216294 | Same |
| 0.0033 | 0.0062 | 0.0122 | 0.0077 | 0.0037 | 0.000 | 0.0152 | 0.0016 | 0.002 | 0.0102 | 0.0147 | 0.0182 | 0.0202 | 0.0223 | 200711 | Same |
| 0.0055 | 0.004 | 0.010 | 0.0055 | 0.0015 | 0.002 | 0.013 | 0.0038 | 0.000 | 0.008 | 0.0125 | 0.016 | 0.018 | 0.0201 | 216782 | Same |
| 0.007 | 0.0025 | 0.0085 | 0.004 | 0.000 | 0.0037 | 0.0115 | 0.0053 | 0.0015 | 0.0065 | 0.011 | 0.0145 | 0.0165 | 0.0186 | 200709 | Same |
| 0.0095 | 0.000 | 0.006 | 0.0015 | 0.0025 | 0.0062 | 0.009 | 0.0078 | 0.004 | 0.004 | 0.0085 | 0.012 | 0.014 | 0.0161 | 200704 | Same |
| 0.011 | 0.0015 | 0.0045 | 0.000 | 0.004 | 0.0077 | 0.0075 | 0.0093 | 0.0055 | 0.0025 | 0.007 | 0.0105 | 0.0125 | 0.0146 | 200708 | Same |
| 0.0135 | 0.004 | 0.002 | 0.0025 | 0.0065 | 0.0102 | 0.005 | .0.0118 | 0.008 | 0.000 | 0.0045 | 0.008 | 0.010 | 0.0121 | 3000491 | Same |
| 0.0155 | 0.006 | 0.000 | 0.0045 | 0.0085 | 0.012 | 0.003 | 0.0138 | 0.010 | 0.002 | 0.0025 | 0.006 | 0.008 | 0.0101 | 200706 | Same |
| 0.018 | 0.0085 | 0.0025 | 0.007 | 0.011 | 0.0147 | 0.0005 | .0.0163 | 0.0125 | 0.0045 | 0.000 | 0.0035 | 0.0055 | 0.0076 | 3000492 | Same |
| 0.0185 | 0.009 | 0.003 | 0.0075 | 0.0115 | 0.0152 | 0.000 | 0.0168 | 0.013 | 0.005 | 0.0005 | 0.003 | 0.005 | 0.0071 | 200714 | Same |
| 0.0215 | 0.012 | 0.006 | 0.0105 | 0.0145 | 0.0182 | 0.003 | 0.0198 | 0.016 | 0.008 | 0.0035 | 0.000 | 0.002 | 0.0041 | 3000493 | Same |
| 0.0235 | 0.014 | 0.008 | 0.0125 | 0.0165 | 0.202 | 0.005 | 0.0218 | 0.018 | 0.010 | 0.0055 | 0.002 | 0.000 | 0.0021 | 3000494 | Same |
| 0.0256 | 0.0161 | 0.010 | 0.0146 | 0.0186 | 0.0223 | 0.0071 | 0.0239 | 0.0020 | 0.0121 | 0.0076 | 0.0041 | 0.0021 | 0.000 | 3000495 | Same |

Answer each of the following questions in the spaces provided. The answers to the questions and the use of Tables A, B, and C will determine the timing key required to correct the injection timing.

A working example is attached for your review to illustrate the use of this worksheet.

1. What is the current timing? 0.120
2. What is the timing code? AJ
3. What is the timing specification for this code? (±0.002 inch) 0.126
4. Is the current timing a larger or smaller number than the specification? SMALLER

   If larger, advance the timing. ____

   If smaller, retard the timing. RETARD
5. What is the difference between the current timing (answer to Question 1) and the specification (answer to Question 3). 0.006
6. Does the offset of the current key point in the same or opposite direction that the camshaft normally rotates? SAME
7. Use TABLE A to determine the current key part number.
   * What is the amount of offset of the current key? 0.033
   * What is the part number of the current key? 200706

TABLE A

| Timing Key (Part No.) | Offset mm | Offset in |
|---|---|---|
| S-302 | None | [ None ] |
| 216294 | 0.089 | [0.0035] |
| 200711 | 0.179 | [0.0070] |
| 216782 | 0.279 | [0.0110] |
| 200709 | 0.381 | [0.0150] |
| 200704 | 0.500 | [0.0197] |
| 200708 | 0.584 | [0.0230] |
| 3000491 | 0.686 | [0.0270] |
| 200706 | 0.833 | [0.0328] |
| 3000492 | 0.914 | [0.0360] |
| 200714 | 0.991 | [0.0390] |
| 3000493 | 1.092 | [0.0430] |
| 3000494 | 1.194 | [0.0470] |
| 3000495 | 1.295 | [0.0510] |

8. Use TABLE B to determine how to use TABLE C. Circle or check the appropriate answer.

TABLE B

| Answer to Question 4 | Answer to Question 6 | Beginning Point on TABLE C | |
|---|---|---|---|
| Advance | Same | Top of column | ____ |
| Advance | Opposite | Bottom of column | ✓ |
| Retard | Same | Bottom of column | ____ |
| Retard | Opposite | Top of column | ____ |

9. Answer the following questions BEFORE using TABLE C to determine the new timing key part number.
   * Find the current key part number listed at the TOP of the column on TABLE C.
   * Move up or down the column (the answer to question 8). Do not pass 0.000 (ZERO)*.

   *If you pass 0.000 (ZERO), you will be choosing a key that does the opposite of what you want it to do.

   STOP when you locate the number nearest (±0.002 inch) to the required change in push rod travel (answer to Question 5). Remain in this row. Move your finger to the right. The result is the New Key Part No. and the Direction of Offset the timing key must point.

   What is the part number of the new key? 3000493

   Note: Each column on TABLE C indicates the change in the push rod travel. The change will result if the key at the top of the column is removed and the new key indicated in the second column from the right is installed. The Direction of Offset will be pointing as indicated in the last column to the right on TABLE C.

## TABLE C

| S-302 | 200704 | 200706 | 200708 | 200709 | 200711 | 200714 | 216294 | 216782 | 3000491 | 3000492 | 3000493 | 3000494 | 3000495 | New Key Part No. | New Key Direction of Offset |
|---|---|---|---|---|---|---|---|---|---|---|---|---|---|---|---|
| 0.0256 | 0.0351 | 0.0411 | 0.0366 | 0.0326 | 0.0289 | 0.0441 | 0.0273 | 0.0311 | 0.0391 | 0.0436 | 0.0471 | 0.0491 | 0.0512 | 3000495 | Opposite |
| 0.0235 | 0.033 | 0.039 | 0.0345 | 0.0305 | 0.0268 | 0.042 | 0.0252 | 0.029 | 0.037 | 0.0415 | 0.045 | 0.0471 | 0.0491 | 3000494 | Opposite |
| 0.0215 | 0.031 | 0.037 | 0.0325 | 0.0285 | 0.0248 | 0.040 | 0.0232 | 0.027 | 0.035 | 0.0395 | 0.043 | 0.0441 | 0.0471 | 3000493 | Opposite |
| 0.0185 | 0.028 | 0.034 | 0.0295 | 0.0255 | 0.0218 | 0.037 | 0.0202 | 0.024 | 0.032 | 0.0365 | 0.040 | 0.042 | 0.0441 | 200714 | Opposite |
| 0.018 | 0.0275 | 0.0335 | 0.029 | 0.025 | 0.0213 | 0.0365 | 0.0197 | 0.0235 | 0.0315 | 0.036 | 0.0395 | 0.0415 | 0.0436 | 3000492 | Opposite |
| 0.0155 | 0.025 | 0.031 | 0.0265 | 0.0225 | 0.0188 | 0.034 | 0.0172 | 0.021 | 0.029 | 0.0335 | 0.037 | 0.039 | 0.0411 | 200706 | Opposite |
| 0.0135 | 0.023 | 0.029 | 0.0245 | 0.0205 | 0.0168 | 0.032 | 0.0152 | 0.019 | 0.027 | 0.0315 | 0.035 | 0.037 | 0.0391 | 3000491 | Opposite |
| 0.011 | 0.0205 | 0.0265 | 0.022 | 0.018 | 0.0143 | 0.0295 | 0.0127 | 0.0165 | 0.0245 | 0.029 | 0.0325 | 0.0345 | 0.0366 | 200708 | Opposite |
| 0.0095 | 0.019 | 0.025 | 0.0205 | 0.0165 | 0.0128 | 0.028 | 0.0112 | 0.015 | 0.023 | 0.0275 | 0.031 | 0.033 | 0.0351 | 200704 | Opposite |
| 0.007 | 0.0165 | 0.0225 | 0.018 | 0.014 | 0.0103 | 0.0255 | 0.0087 | 0.0125 | 0.0205 | 0.025 | 0.0285 | 0.0305 | 0.0326 | 200709 | Opposite |
| 0.0055 | 0.015 | 0.021 | 0.0165 | 0.0125 | 0.009 | 0.024 | 0.0072 | 0.011 | 0.019 | 0.0235 | 0.027 | 0.029 | 0.0311 | 216782 | Opposite |
| 0.0033 | 0.0128 | 0.0188 | 0.0143 | 0.0103 | 0.006 | 0.0218 | 0.005 | 0.009 | 0.0168 | 0.0213 | 0.0248 | 0.0268 | 0.0289 | 200711 | Opposite |
| 0.0017 | 0.0112 | 0.0172 | 0.0127 | 0.0087 | 0.0051 | 0.0202 | 0.0034 | 0.0072 | 0.0152 | 0.0197 | 0.0232 | 0.0252 | 0.0273 | 216294 | Opposite |
| 0.000 | 0.0095 | 0.0155 | 0.011 | 0.007 | 0.003 | 0.0185 | 0.0017 | 0.006 | 0.0135 | 0.018 | 0.0205 | 0.0235 | 0.0256 | S-302 | N/A |
| 0.0017 | 0.0078 | 0.0138 | 0.0093 | 0.0053 | 0.0016 | 0.0168 | 0.000 | 0.0038 | 0.0118 | 0.0163 | 0.0198 | 0.0218 | 0.0239 | 216294 | Same |
| 0.0033 | 0.0062 | 0.0122 | 0.0077 | 0.0037 | 0.000 | 0.0152 | 0.0016 | 0.002 | 0.0102 | 0.0147 | 0.0182 | 0.0202 | 0.0223 | 200711 | Same |
| 0.0055 | 0.004 | 0.010 | 0.0055 | 0.0015 | 0.002 | 0.013 | 0.0038 | 0.000 | 0.008 | 0.0125 | 0.016 | 0.018 | 0.0201 | 216782 | Same |
| 0.007 | 0.0025 | 0.0085 | 0.004 | 0.000 | 0.0037 | 0.0115 | 0.0053 | 0.0015 | 0.0065 | 0.011 | 0.0145 | 0.0165 | 0.0186 | 200709 | Same |
| 0.0095 | 0.000 | 0.006 | 0.0015 | 0.0025 | 0.0062 | 0.009 | 0.0078 | 0.004 | 0.004 | 0.0085 | 0.012 | 0.014 | 0.0161 | 200704 | Same |
| 0.011 | 0.0015 | 0.0045 | 0.000 | 0.004 | 0.0077 | 0.0075 | 0.0093 | 0.0055 | 0.0025 | 0.007 | 0.0105 | 0.0125 | 0.0146 | 200708 | Same |
| 0.0135 | 0.004 | 0.002 | 0.0025 | 0.0065 | 0.0102 | 0.005 | .0.0118 | 0.008 | 0.000 | 0.0045 | 0.008 | 0.010 | 0.0121 | 3000491 | Same |
| 0.0155 | 0.006 | 0.000 | 0.0045 | 0.0085 | 0.012 | 0.003 | 0.0138 | 0.010 | 0.002 | 0.0025 | 0.006 | 0.008 | 0.0101 | 200706 | Same |
| 0.018 | 0.0085 | 0.0025 | 0.007 | 0.011 | 0.0147 | 0.0005 | .0.0163 | 0.0125 | 0.0045 | 0.000 | 0.0035 | 0.0055 | 0.0076 | 3000492 | Same |
| 0.0185 | 0.009 | 0.003 | 0.0075 | 0.0115 | 0.0152 | 0.000 | 0.0168 | 0.013 | 0.005 | 0.0005 | 0.003 | 0.005 | 0.0071 | 200714 | Same |
| 0.0215 | 0.012 | 0.006 | 0.0105 | 0.0145 | 0.0182 | 0.003 | 0.015 | 0.016 | 0.008 | 0.0035 | 0.0[illegible] | 0.002 | 0.0041 | 3000493 | Same |
| 0.0235 | 0.014 | 0.008 | 0.0125 | 0.0165 | 0.202 | 0.005 | 0.0218 | 0.018 | 0.010 | 0.0055 | 0.002 | 0.000 | 0.0021 | 3000494 | Same |
| 0.0256 | 0.0161 | 0.010 | 0.0146 | 0.0186 | 0.0223 | 0.0071 | 0.0239 | 0.0020 | 0.0121 | 0.0076 | 0.0041 | 0.0021 | 0.000 | 3000495 | Same |

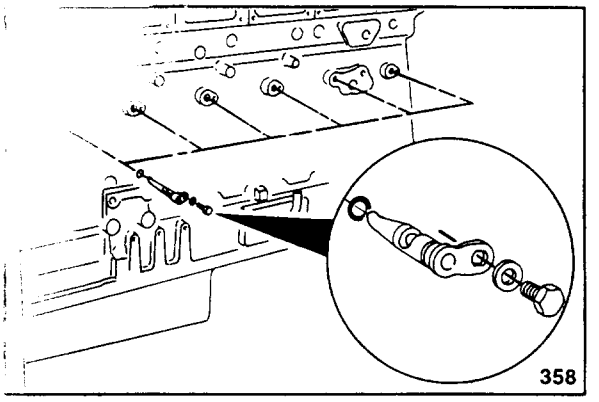


# Piston Cooling Nozzle - Replace (07-21)

## Remove

Remove the piston cooling nozzles. If the fuel pump or air compressor must be removed to gain access to the piston cooling nozzles, refer to Procedure 05-11 or 04-15.

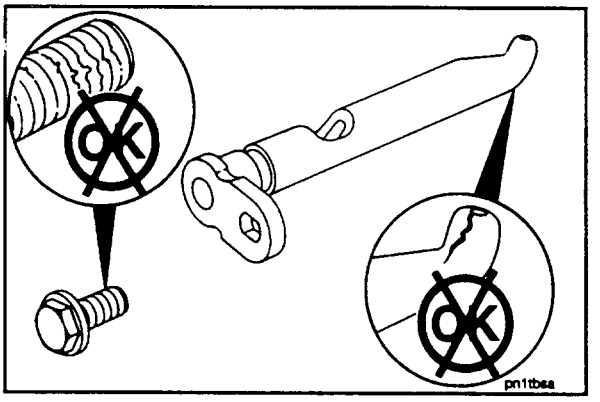


## Check For Reuse

Clean and check the nozzles for reuse. Check for damage at the o-ring groove and at the spray tip. A damaged nozzle cannot be repaired, it must be replaced.

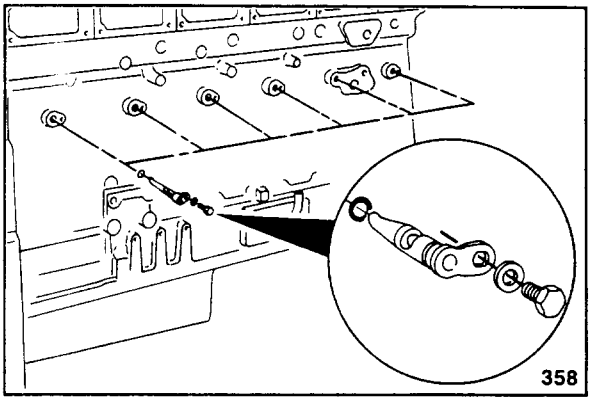


## Install

Lubricate the o-ring with vegetable oil and install it on the nozzle. Install the nozzle, washer and capscrew. Tighten the capscrews to 12.5 N•m [110 in-lb].

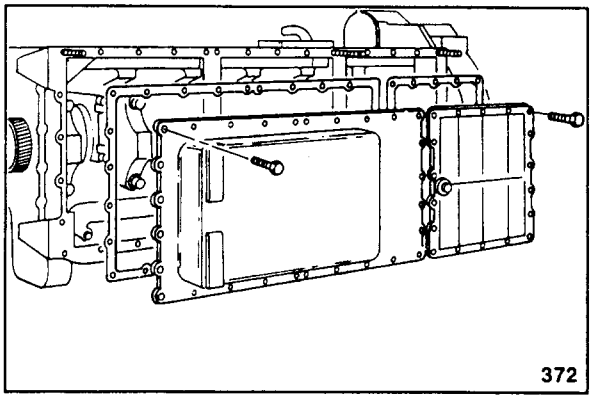


# Main Crankshaft Bearing - Replace (07-22)

## Remove

1. Drain the oil, remove the oil sump and adapter cover. Refer to Procedure 02-16.

2. Remove the oil suction tube. Discard the gasket.

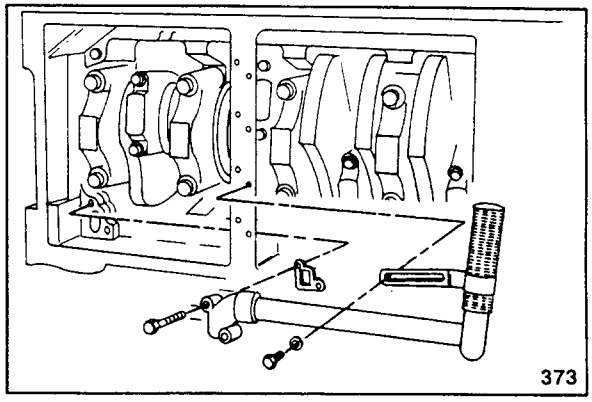


3. Remove the oil pan adapter. Refer to Procedure 02-17.

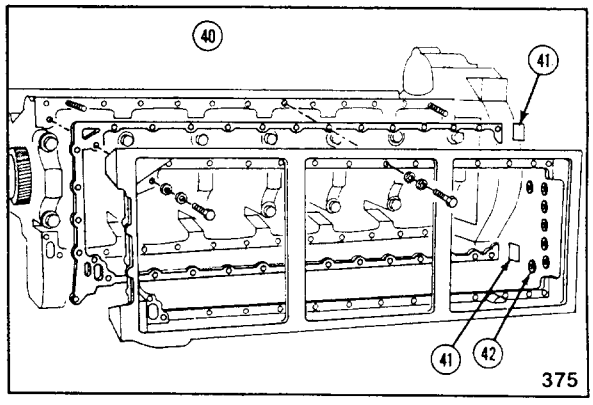


**Caution: Replace the bearings one at a time. Personal injury and damage to the crankshaft can result if the crankshaft falls.**

4. The main bearing caps must be marked for position. In this example, 5B14 identifies the block. The last number on each bearing cap identifies the cap location.

   Use a steel stamp and mark any cap that is not marked correctly.

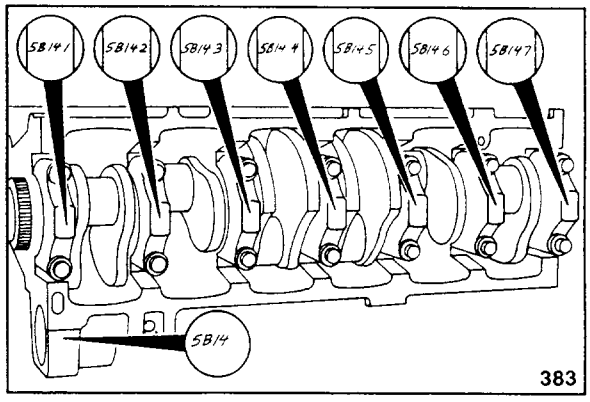


5. Remove the main bearing cap capscrews. Use a main bearing cap puller, Part No. ST-1178 or two pry bars to remove the cap. Put the pry bars in the notches at the sides of the caps.

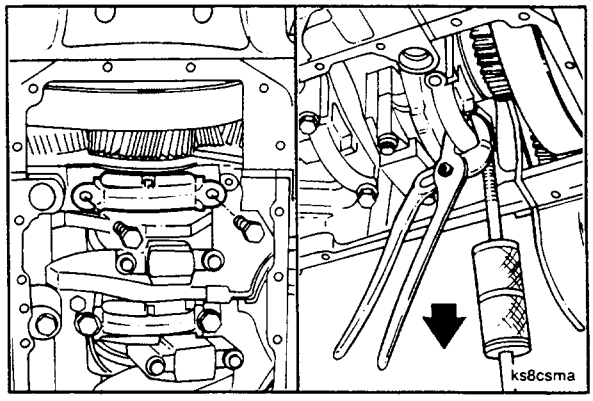

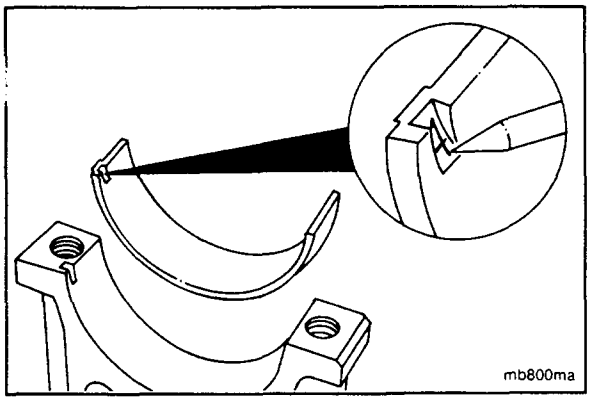


6. Remove the lower bearing. Use an awl and mark the bearing position in the tang area.

**Note:** Mark the bearing position for future identification or for failure analysis.

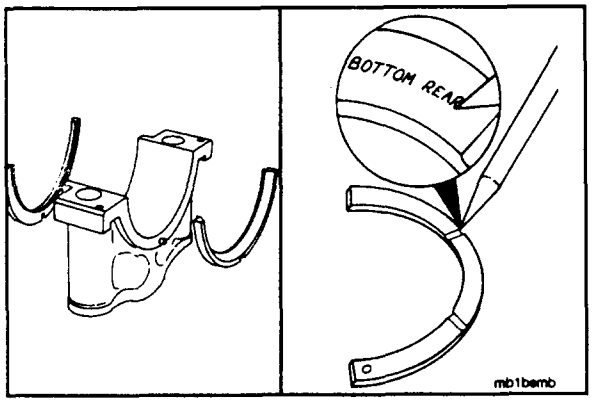


7. The number 6 cap contains two thrust bearings. Remove and mark them for position in the notched area.

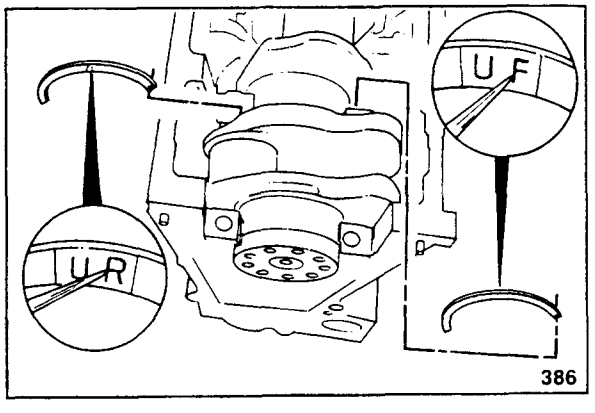


8. Remove the two upper thrust bearings from the block at the No. 6 location. Mark them for position.

**Note:** If necessary, slide the crankshaft to the front or to the rear to allow the thrust bearings to be removed.

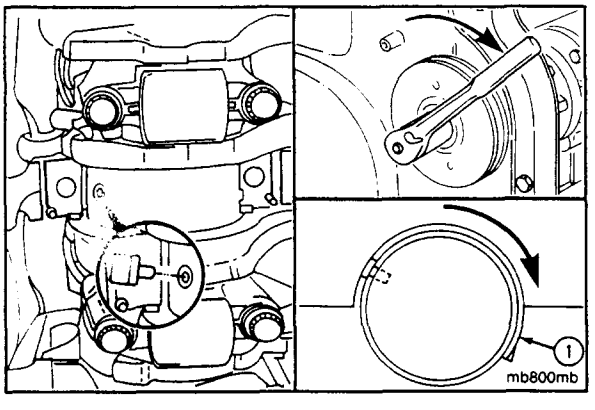


To remove the upper main bearing shell, use a tool similar to the one shown and install it in the crankshaft main bearing journal oil hole.

**Note:** Rotate the crankshaft so the tang (1) of the main bearing shell rolls out of the block first.

9. Use the barring mechanism and slowly turn the crankshaft until the bearing shell is out of the block.

## Check For Reuse

1. Use a lint free cloth or a paper towel and clean the crankshaft journal.

   Visually inspect the journal for damage.

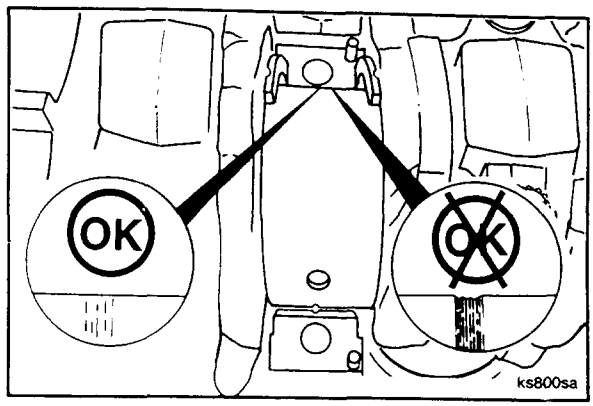


## Install

**Note:** The upper bearings contain an oil hole. The lower bearings do not. Both bearings are marked on the back side indicating location (UPPER or LOWER) and size (STANDARD std. or OVERSIZE OS). The amount of OS is indicated in U.S. customary inches.

1. Use the same size (std. .010,.015, .020, or .030) bearing that was removed.

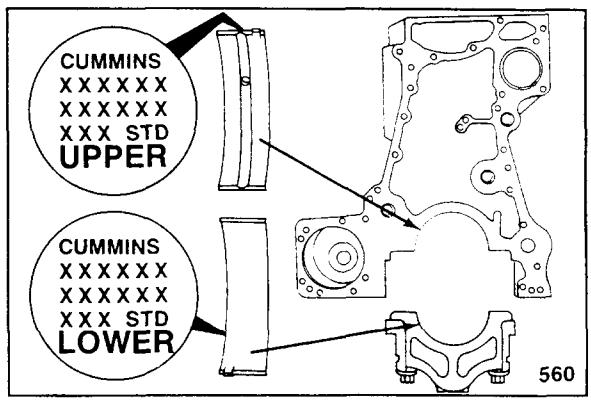


2. The crankshaft will be stamped on the end of the number 1 counterweight to show if it has been ground undersize. Thrust bearing size is stamped on a crankshaft counterweight adjacent to the thrust location.

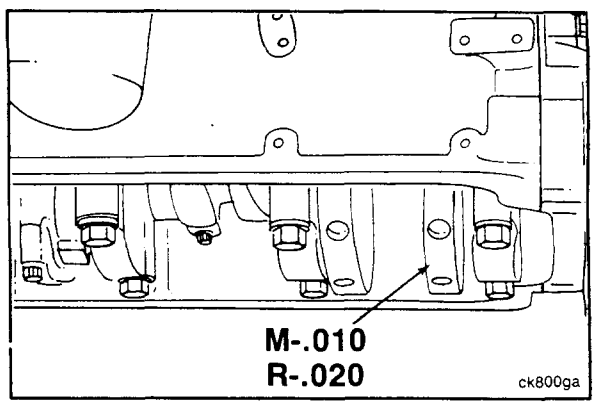


**Note:** Used bearings must be installed in their original location.

3. Install the upper main bearing shells, using the same method that was used to remove them.

**Caution: The bearing tang (1) must fit into the slot (2) in the bearing saddle.**

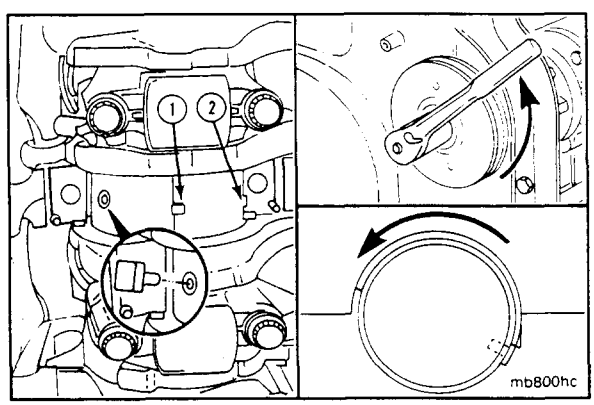

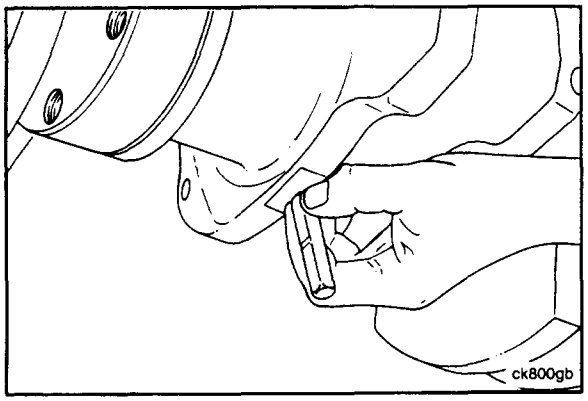


Thrust bearings are available in 3 sizes, std., .010, .020 OS. The upper and lower thrust bearings must be the same size. The front and rear may be different sizes.

Use the same size as those removed. The crankshaft will be marked if the thrust flange has been machined for oversize thrust bearings.

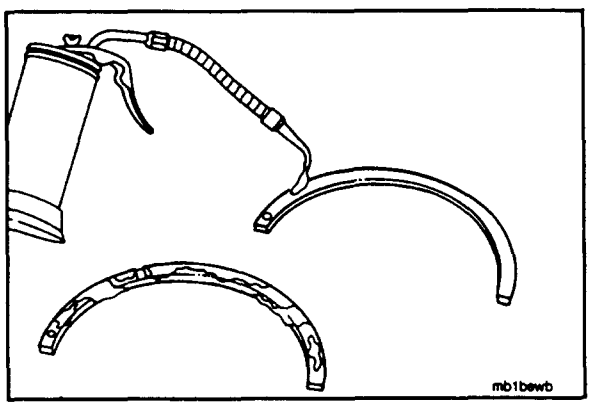


4. Lubricate the upper thrust bearings with engine oil.

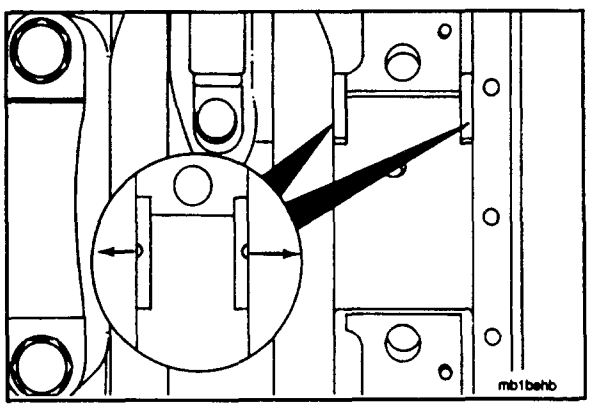


**Caution: The grooves in the thrust bearings must point towards the crankshaft.**

5. Install the bearings in the No. 6 location.

**Note:** Move the crankshaft to the front or to the rear to enable the second thrust bearing to be installed.

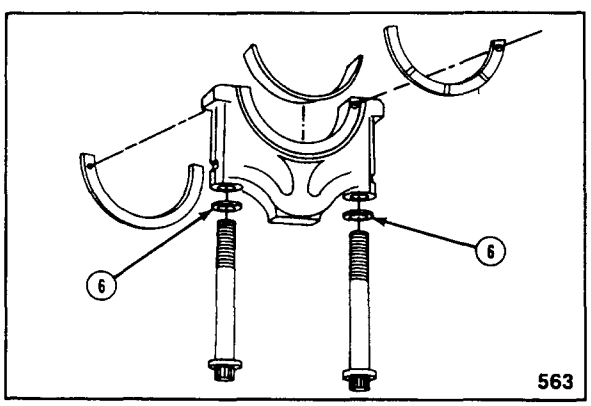


6. Use a lint free cloth. Clean the lower main bearings, the lower thrust bearings, and the mounting surfaces.

**Note:** Do not lubricate the back of the main bearings.

7. Align the tang in the bearing with the slot in the main bearing cap. Install the bearing. The end of the bearing must be even with the main bearing cap mounting surface. Lubricate the bearing surface with engine oil.

**Caution: Use ONLY the correct capscrew and washer combination.**

Two types of main bearing capscrews have been used on K19 engines.

- The capscrews with ONLY an "x34" marking on the top have a small radius between the shank and the head.
- The capscrews with OTHER markings on the top have a large radius between the shank and the head.

Use ONLY one type of capscrew in an engine. This will avoid assembly problems.

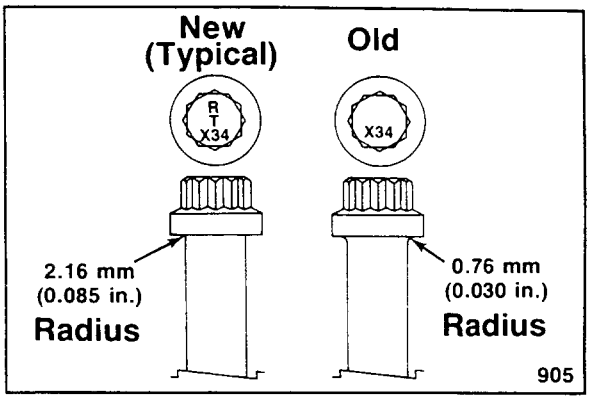


The main bearing caps on engines with a ESN greater than 31118624 have been chamfered. Use the larger radius capscrew with chamfered main bearing caps.

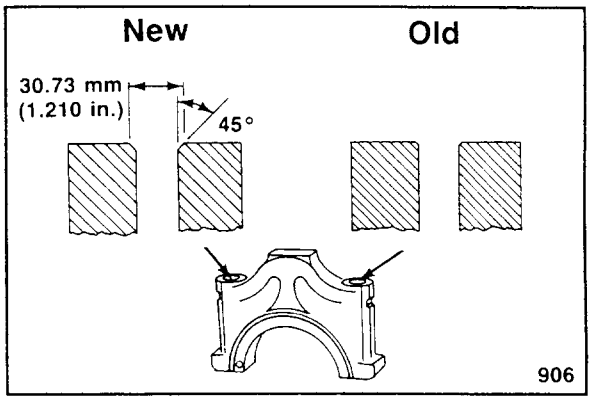


**Caution: The old style washer must not be used with a large radius capscrew.**

New style washers must be used with large radius capscrews if the main bearing caps are not chamfered. Large radius capscrews do not require a washer if the main bearing cap is chamfered.

The small radius capscrews can be used with all main bearing caps.

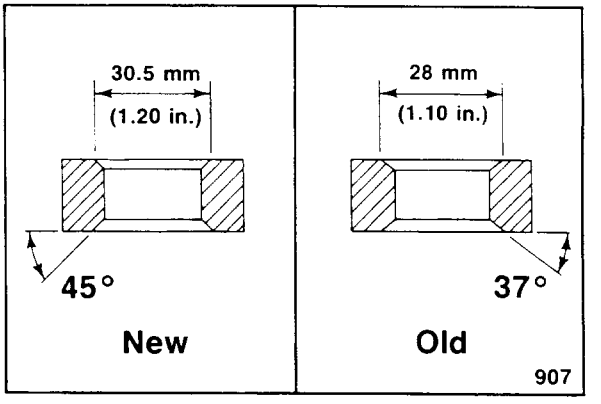


8. Lubricate the capscrew head, threads, and washer with SAE EP 140W oil. Allow the excess oil to drip off of the capscrews before installing in the block.
9. Install the washer and capscrew in the cap.

**Caution: The grooves in the thrust bearings must point towards the crankshaft. The dowels that secure the bearings must not protrude above the bearing.**

10. Install the two thrust bearings on the No. 6 main bearing cap.

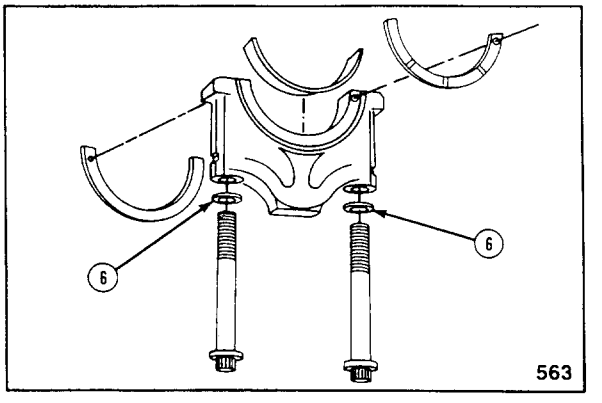

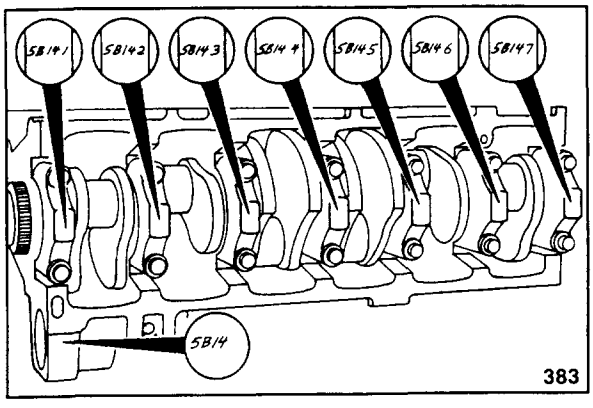

383

**Caution: The numbers on the main bearing caps must be the same as the numbers on the block.**

11. Check the number on the main bearing caps. The last digit of each number (1 to 7), as illustrated on the caps, shows the location.

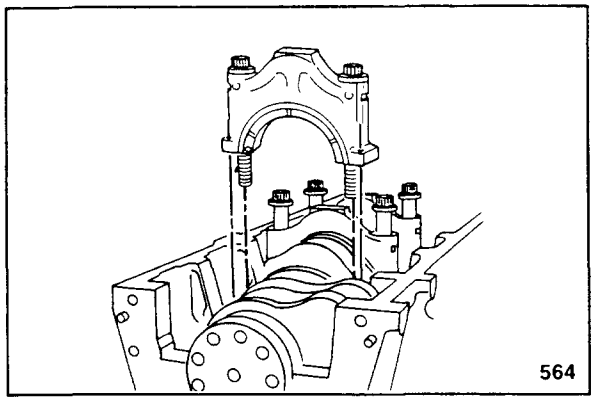
564

12. Lubricate the bearing surface with engine oil. The bearing shells must be firmly seated in the cap and the correct capscrew, washer combination in position. Install the main bearing caps.

**Note:** Do not hit the main bearing caps with a hammer. The bearing shells can fall out.

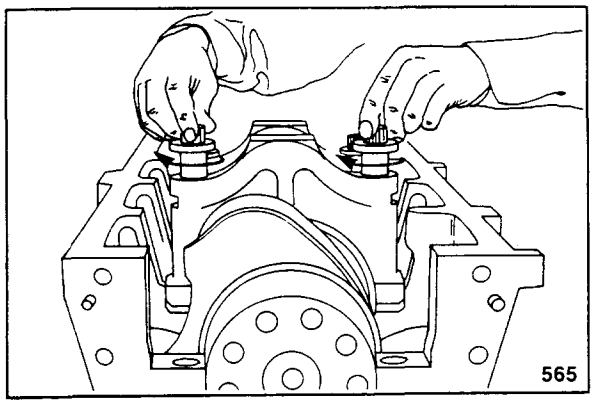
565

**Note:** Use your hands to install the capscrews.

13. Turn the capscrew until they touch the washer or the main bearing caps.

**Note:** Do not rotate the crankshaft until the main bearing capscrews are tightened. This will keep the bearings in place.

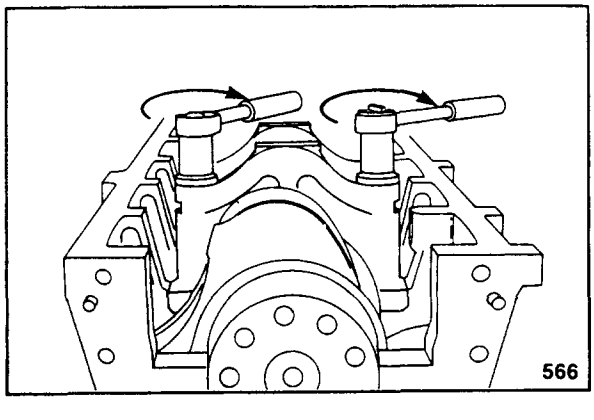
566

**Note:** Do not use an impact wrench. The main bearing shells can fall out.

14. Use both of the capscrews to pull the main bearing cap into position.

    Use two wrenches and tighten both capscrews at the same time.

    Check to be sure the No. 7 cap is even with the back of the block.

15. Use the following steps and tighten the capscrews in the sequence shown.

| Main Bearing Capscrew Torque Values | | |
|---|---|---|
| N•m | Step | ft-lb |
| 265 | 1 | 195 |
| 605 | 2 | 445 |
| Loosen | 3 | Loosen |
| 265 | 4 | 195 |
| 605 | 5 | 445 |

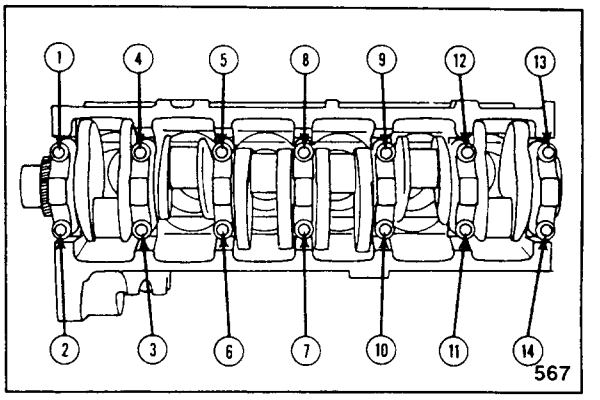


16. Turn the crankshaft. If the pistons have been removed use your hands. If the pistons have not been removed use the barring mechanism.

**Note:** The crankshaft will turn freely if the main bearings are installed correctly.

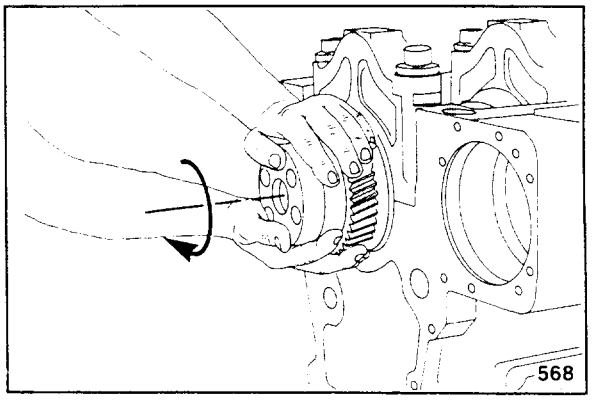


17. Use a dial indicator and measure the crankshaft end clearance.

| Crankshaft End Clearance | | |
|---|---|---|
| mm | | in |
| 0.10 | MIN | 0.004 |
| 0.41 | MAX | 0.016 |

If the clearance is not within specifications, check for foreign material. Oversize thrust bearings are available to adjust the end clearance.

**Note:** The upper and lower thrust bearing on the same side of the main caps must be the same thickness.

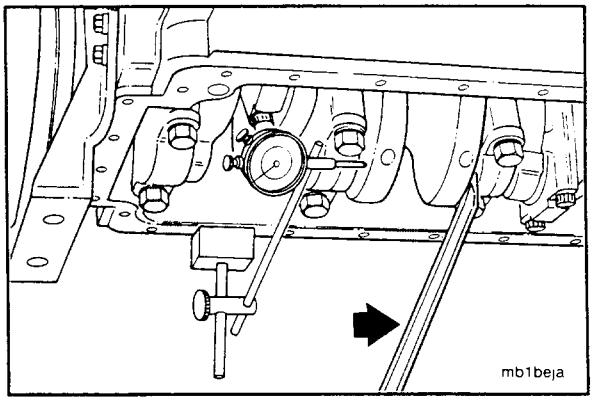


18. Install the oil pan adapter. Refer to procedure 02-17.

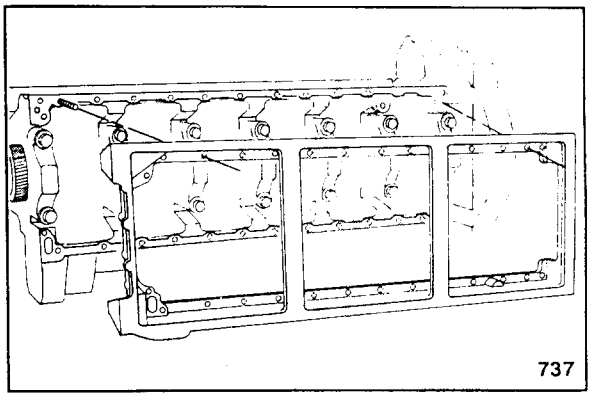

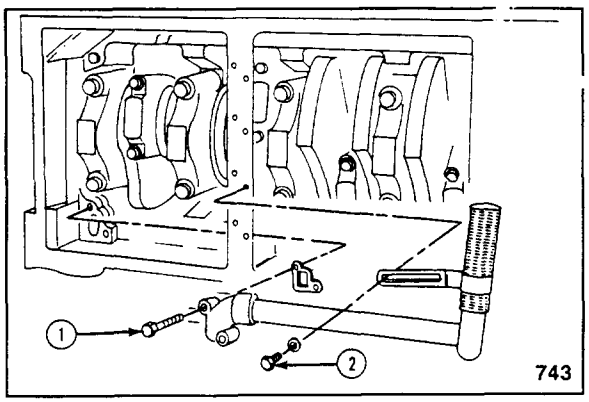


**Note:** Tighten the suction tube to block capscrews (1) before installing any support bracket capscrews.

**Note:** The suction tube shape can vary from the illustration. All suction tubes attach to the block in the same manner.

19. Install the gasket, suction tube, washers, and capscrews (1). Tighten to 60 N•m [45 ft-lb].

**Caution: Do not pry or bend the suction tube to get the support bracket capscrew holes to align.**

20. Connect the support bracket to the adapter with the capscrew (5) (2). Tighten to 35 N•m [25 ft-lb].

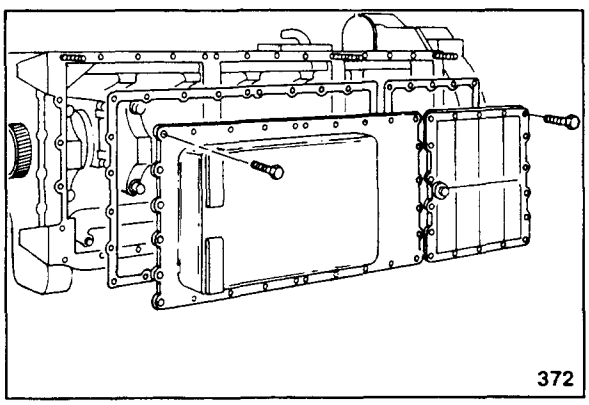


21. Install the oil sump and related components. Refer to Procedure 02-16.
22. Install new oil filter elements. Refer to Procedure 02-11.

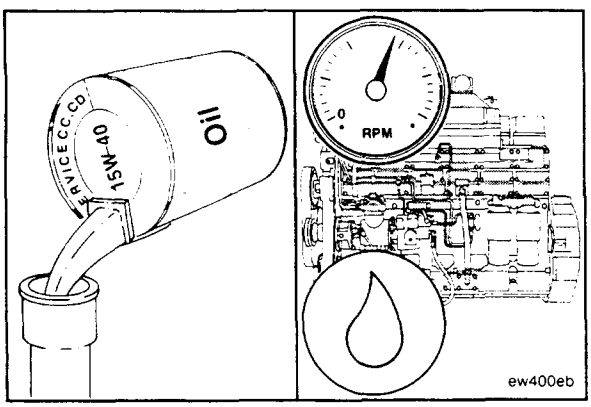


23. Fill the engine with clean 15W-40 oil. Refer to Procedure 02-10 for engine oil capacity.
24. Operate the engine to 70°C [160°F] coolant temperature and check for leaks.

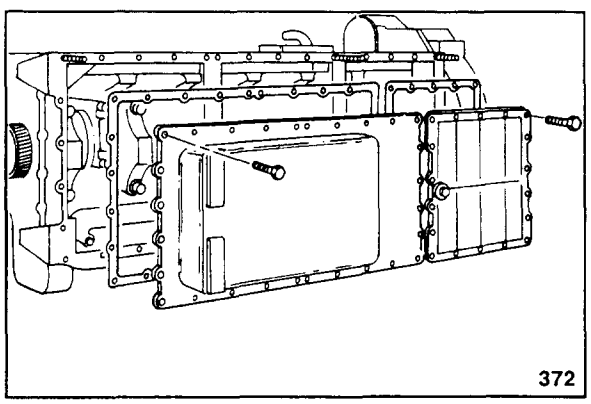


## Connecting Rod Bearing - Replace (07-23)

### Remove

1. Drain the oil, remove the oil sump and adapter cover. Refer to Procedure 02-16.

2. Remove the oil suction tube. Discard the gasket.

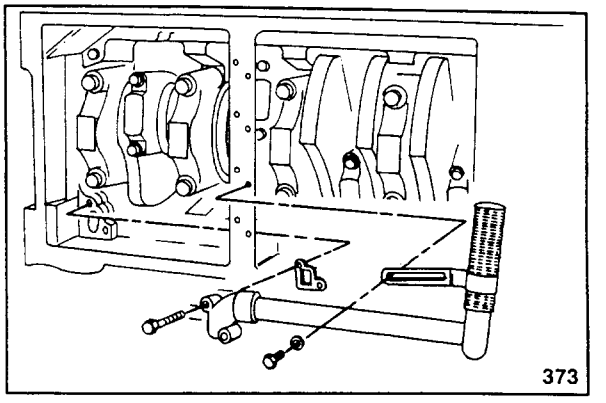


3. Use the barring mechanism to rotate the engine. Rotate the crankshaft to position the connecting rod at "BDC" (bottom dead center).

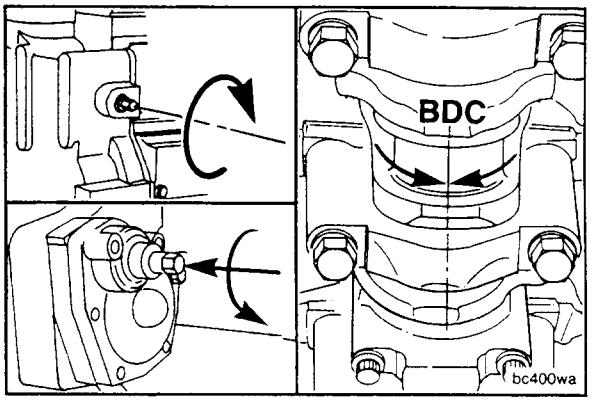


4. The connecting rods must have the cylinder number marked on both the rod and the cap on the side positioned towards the camshaft. Check the rods for correct markings. Use a steel stamp and mark any rod not correctly marked.
5. Loosen the capscrews until there is 6 mm [1/4 inch] of clearance between the rod cap and the capscrew head.

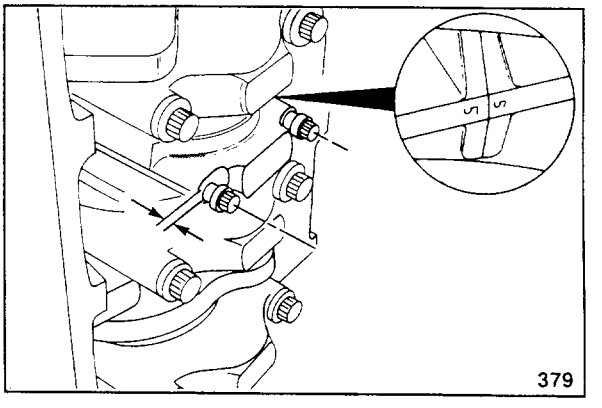


6. Use a mallet. Tap the connecting rod capscrews until the connecting rod cap and rod separate. Remove the capscrews and the cap.
7. Remove the lower rod bearing. Use a awl and mark the bearing position in the tang area.

Note: Mark the bearing for future identification or for failure analysis.

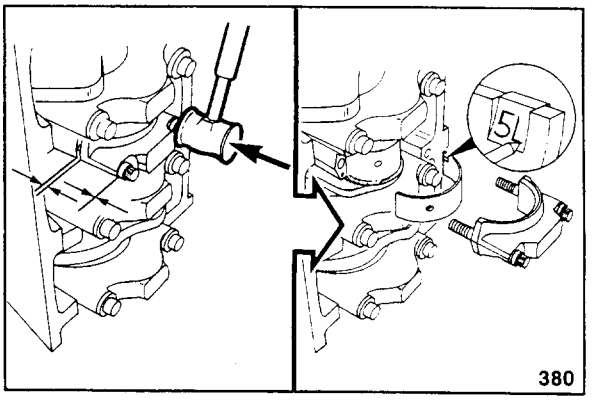

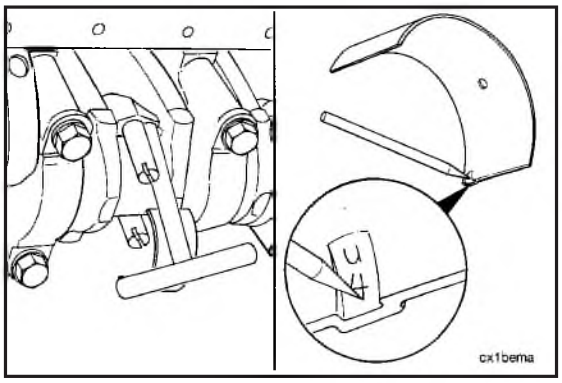


8. Push the rods up enough to allow the upper bearing shells to be removed. Remove the bearing shell and mark its location.

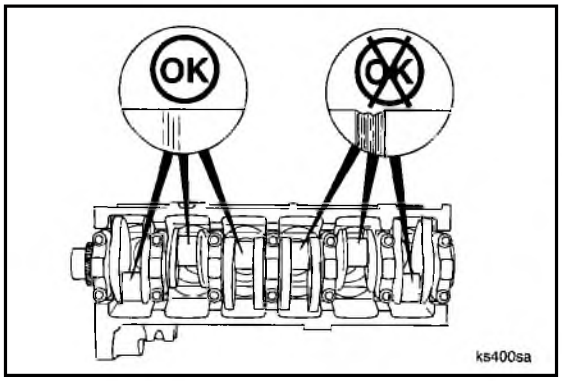


## Check For Reuse

1. Use a lint free cloth or paper towel and clean the connecting rod journal.

   Visually inspect the journal for damage.

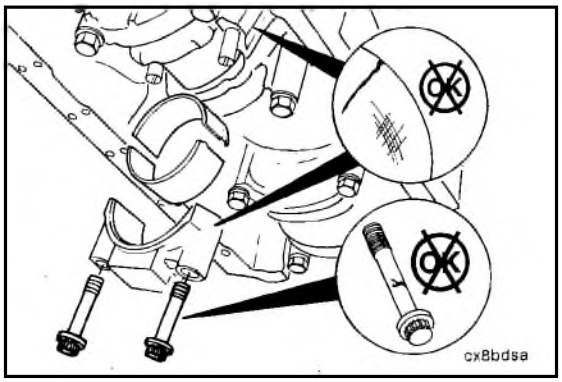


2. Visually inspect the rod caps, connecting rod bearing saddles, and capscrews for nicks, cracks, burrs, scratches or fretting.

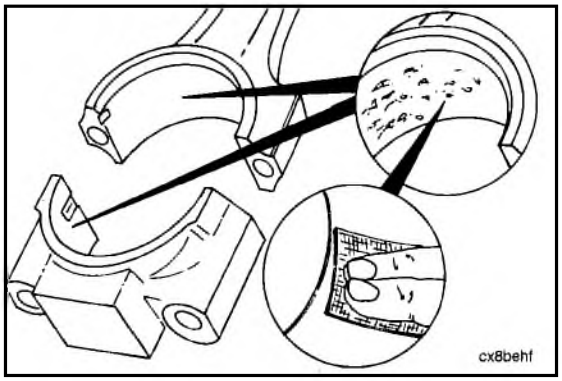


3. Visually inspect the bearing seating surface for nicks or burrs. If nicks or burrs cannot be removed with fine crocus cloth, the rod must be replaced.

## Install

**Note:** Used bearings must be installed in the same location they were removed from.

1. Lubricate the bearing shell with engine oil. Install the upper bearing shell in the connecting rod with the tang (1) of the bearing in the slot (2) of the rod.

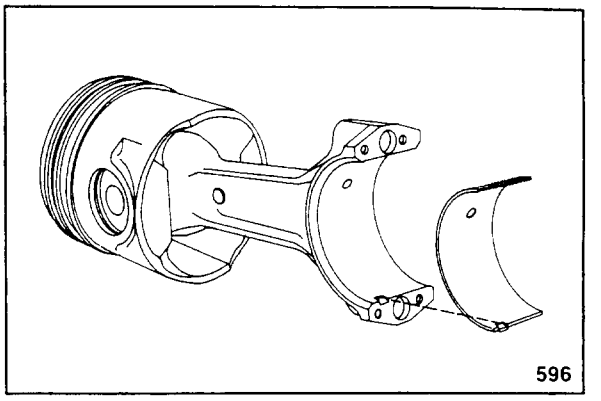


**Caution: Do not lubricate the back of the bearing shells.**

2. Install the lower bearing shell in the rod cap. Make sure the tang of the bearing shell is in the slot of the cap and the end of the bearing is even with the cap surface.

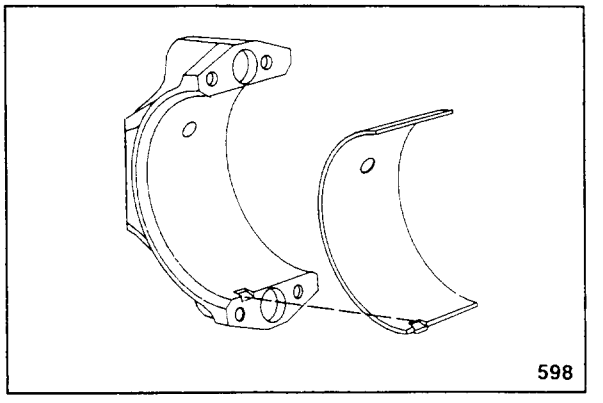


3. Lubricate the connecting rod capscrews and washers with engine oil as shown. Install the washers and capscrews in the caps.

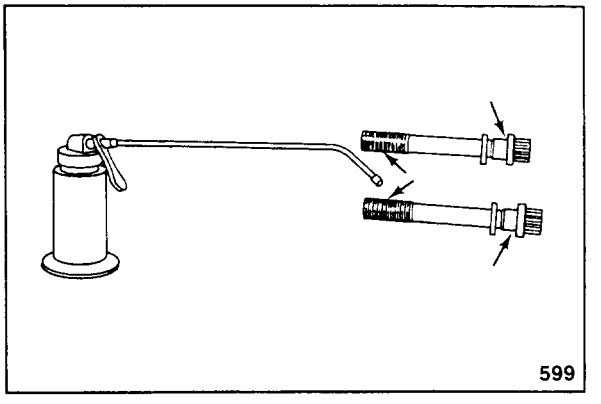

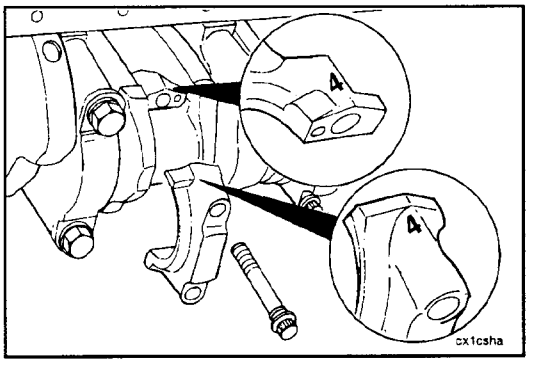


**Caution: The connecting rods and caps are not interchangeable. The rods and the caps are machined as an assembly. Failure will result if they are mixed.**

**Caution: The cylinder number on the rod and cap must be the same.**

**Caution: The side of the cap with the cylinder number marking (bearing tang side) must be towards the camshaft.**

4. Install the connecting rod cap.
5. Tighten the capscrews alternately and evenly to pull the cap over the dowel pins. Use the following steps to tighten the capscrews.

**Connecting Rod Cap Torque Values**

| N•m | Step | ft-lb |
|---|---|---|
| 100 | 1 | 75 |
| 205 | 2 | 150 |
| 290 | 3 | 215 |
| Loosen | 4 | Loosen |
| 100 | 5 | 100 |
| 205 | 6 | 150 |
| 290 | 7 | 215 |

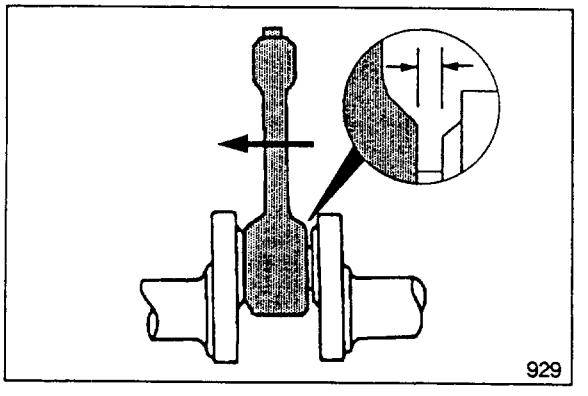


6. Check the side clearance between the rod and the crankshaft. The side clearance must be a minimum of 0.20 mm [0.008 inch].

   The rod must move freely from side- to-side.

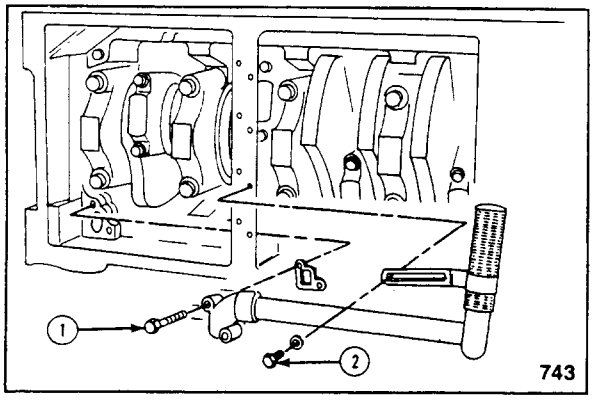


**NOTE:** Tighten the suction tube to the block capscrews (1) before installing any support bracket capscrews.

**NOTE:** The suction tube shape can vary from the illustration. All suction tubes attach to the block in the same manner.

7. Install the gasket, oil suction tube, washers, and capscrews. Tighten the capscrews to 60 N•m [45 ft-lb].

**Caution: Do not pry or bend the suction tube to get the support bracket capscrew holes to align.**

8. Connect the support bracket to the adapter with the capscrew (2). Tighten the capscrews to 35 N•m [25 ft-lb].

9. Install the oil sump and related components. Refer to Procedure 02-16.

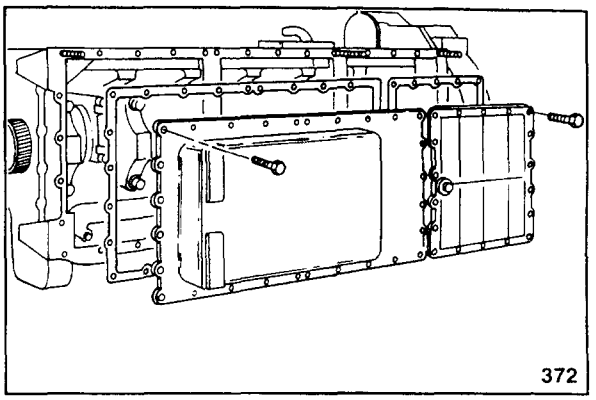


10. Install new oil filter elements. Refer to Procedure 02-11.

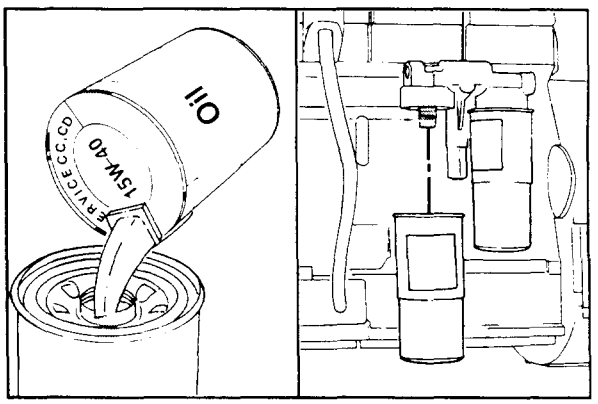


11. Fill the engine with clean 15W-40 oil. Refer to Procedure 02-10 for engine oil capacity.
12. Operate the engine to 70°C [160°F] coolant temperature and check for leaks.

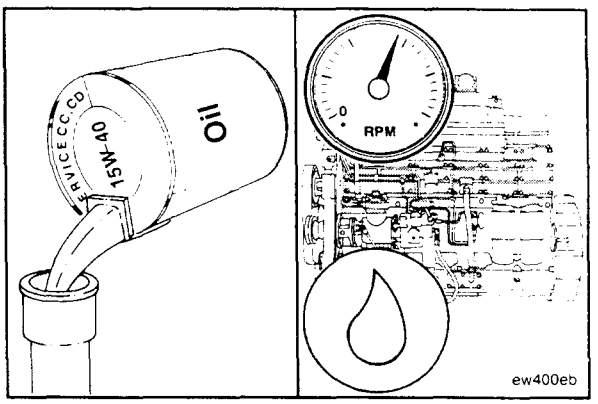


## Piston And Rod Assembly - Replace (07-24)

### Remove

1. Remove the cylinder head. Refer to Procedure 07-14.

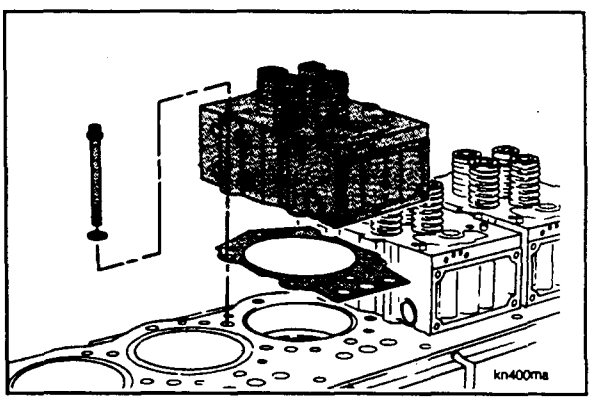

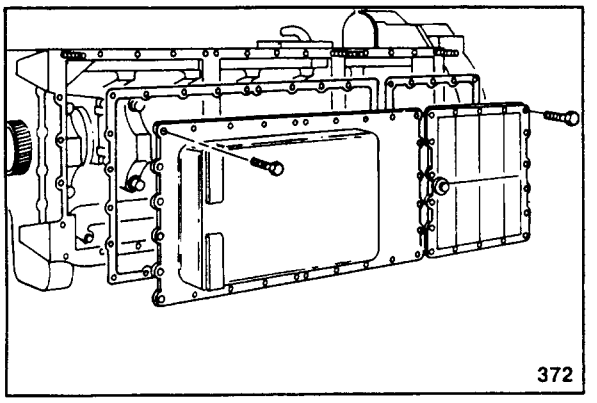


2. Drain the oil, remove the oil sump and adapter cover. Refer to Procedure 02-16.

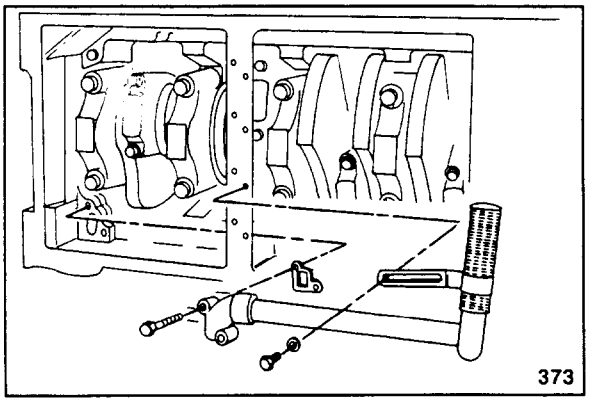


3. Remove the capscrew from the mounting clamp.

   Remove the two capscrews from the mounting flange. Remove the oil pan suction tube. Remove and discard the gasket.

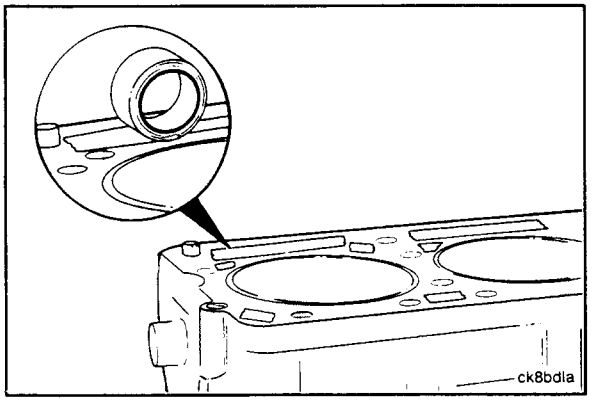


## Remove Carbon Ridge

1. Protect the push rod galleys, coolant and oil passages from contamination.

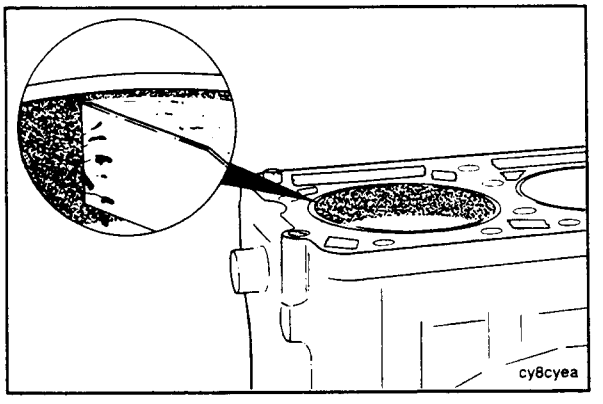


**Caution: Do not use abrasive paper to remove the carbon ring. Small particles of abrasive paper will cause severe engine damage.**

2. Use a scraper or similar blunt edged tool to loosen the carbon deposits.

**Caution: Use extreme care to assure that no abrasive is used in the ring travel area.**

3. Remove the remaining carbon with a nylon abrasive pad, Scotch-Brite 7448, or equivalent, and solvent. The carbon must be removed but the surface need not look like new metal.

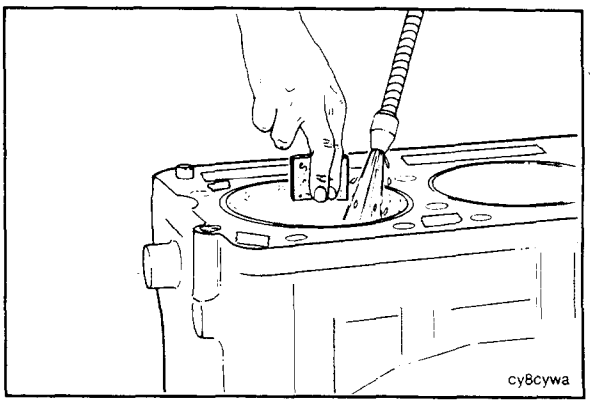


**Warning: To prevent serious eye damage wear eye protection during this operation.**

4. An alternative method to remove the carbon ridge is to use a high quality steel wire wheel installed in a drill.

**Note:** An inferior quality wire wheel will lose steel bristles during operation, thus causing additional contamination.

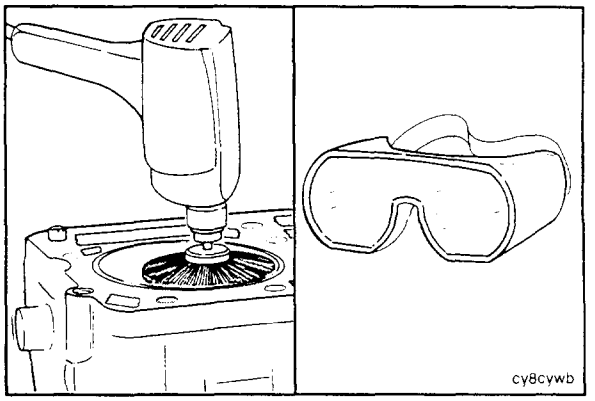


5. Do not use the steel wire wheel in the piston travel area. Operate the wheel in a circular motion to remove the deposits.

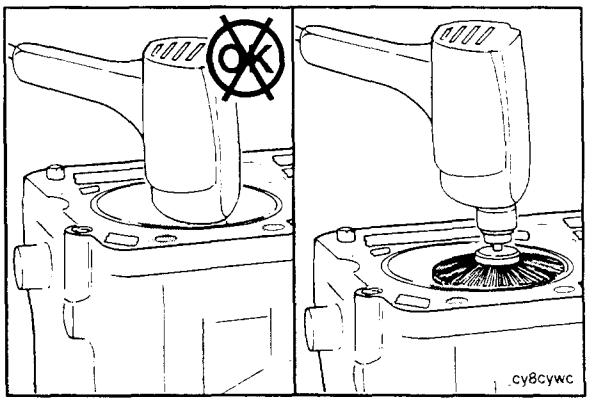


6. Use the barring mechanism to rotate the engine. Rotate the crankshaft to position the connecting rod at "BDC" (bottom dead center).

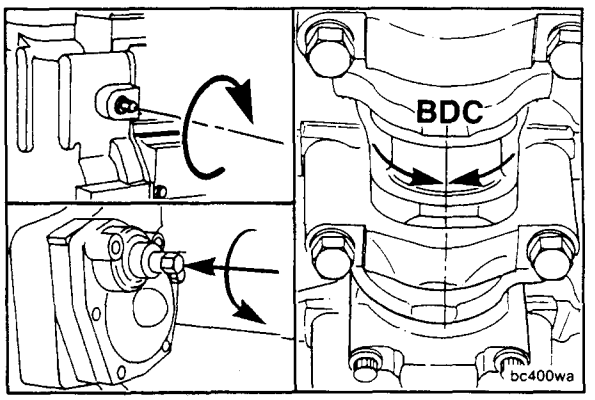

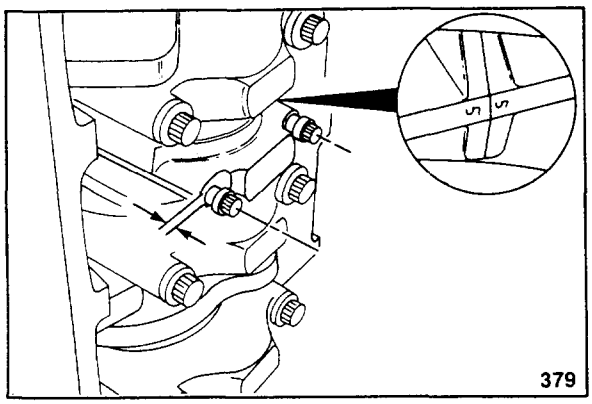

379

7. Connecting rods must have the cylinder number marked on both the rod and the cap on the side positioned towards the camshaft. Check the rods for correct markings. Use a steel stamp and mark any rod not correctly marked.
8. Loosen the capscrews until there is 6 mm [1/4 inch] of clearance between the rod cap and the capscrew head.

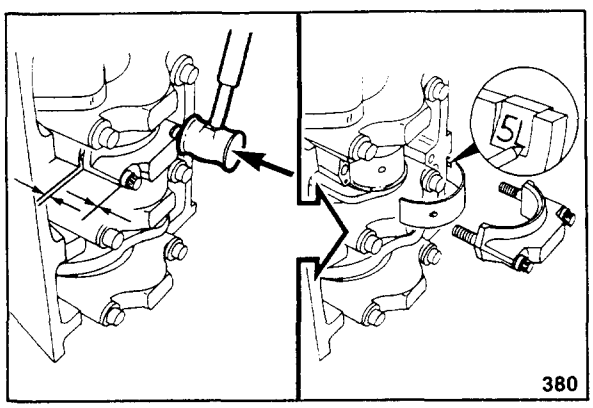

380

9. Use a mallet. Tap the connecting rod capscrews until the connecting rcd cap and rod separate. Remove the capscrews and the cap.
10. Remove the lower rod bearing. Use a awl and mark the bearing position in the tang area.

**Note:** Mark the bearing for future identification or for failure analysis.

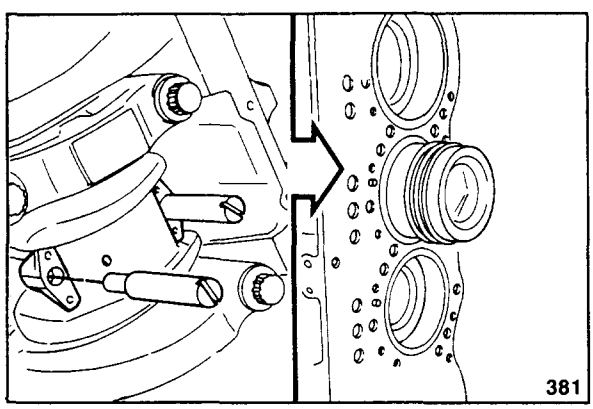
381

11. Use two connecting rod guide pins, Part No. 3375098, or equivalent. Install the guide pins in the connecting rod.

    Push the piston and connecting rod up until the piston rings are above the cylinder liner.

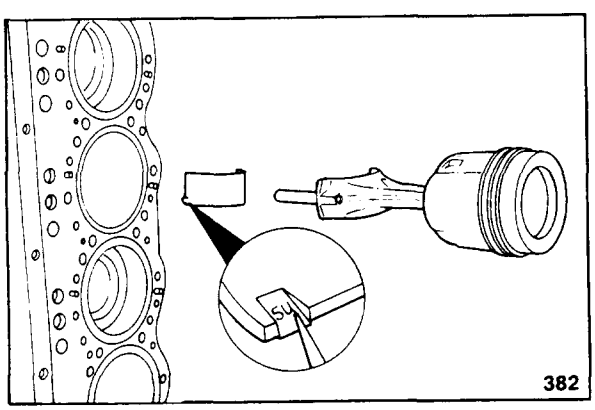

382

**Caution: Put the piston and rod assembly in a rack to prevent damage.**

12. Remove the piston and rod assembly.
13. Remove the upper connecting rod bearing. Use an awl and mark the bearing position in the tang area.

**Caution: Do not attempt to remove the piston pin without applying heat as directed. Damage to the piston will result.**

14. Remove one piston pin retaining ring.

**Caution: Wear protective gloves to prevent personal injury when handling hot parts.**

15. Put the assembly in hot water for three to five minutes. The water must be heated between 82°C to 100°C [180°F to 212°F] and must completely cover the piston.

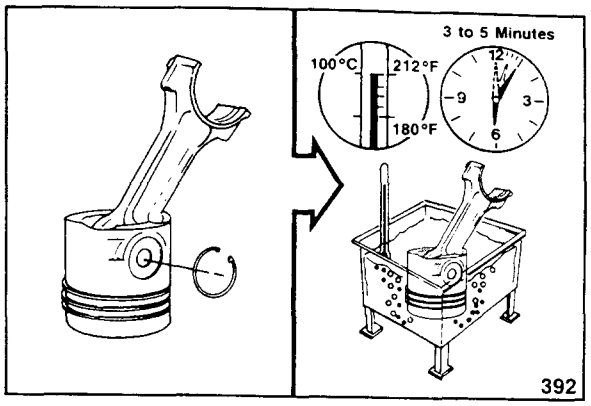


**Caution: Wear protective gloves to prevent personal injury when handling hot parts.**

16. Remove the assembly from the hot water. Turn the piston so the remaining retainer ring is positioned up. Tap the piston on a block of wood until the piston pin slides out.

**Note:** Force can be used if the piston is not reuseable. Use a brass drift and a hammer to remove the pin. Use caution to avoid damaging the connecting rod bushing.

17. Remove the connecting rod and retaining ring from the piston.

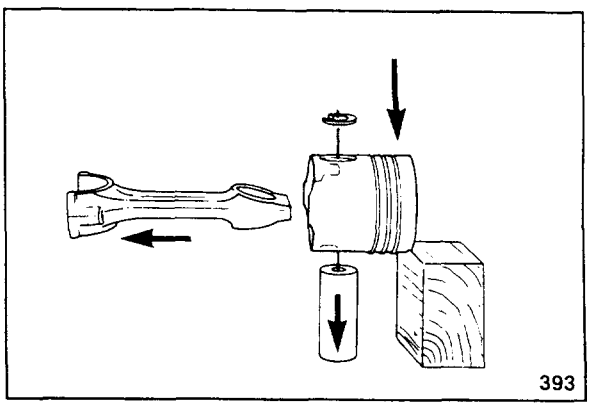


## Clean Liner Bore

1. Lubricate the inside of the liner with engine oil. Allow the liner to soak for five to ten minutes.

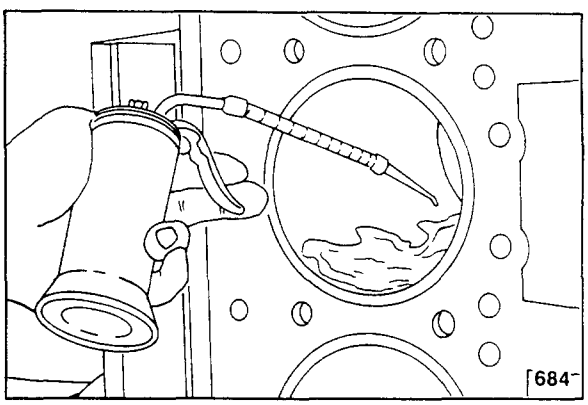


**Caution: Do not use a cloth towel. Lint will cause severe engine damage.**

2. Use a paper towel and wipe the inside of the liner.

   Repeat these three cleaning steps until the paper towel shows no black or gray residue.

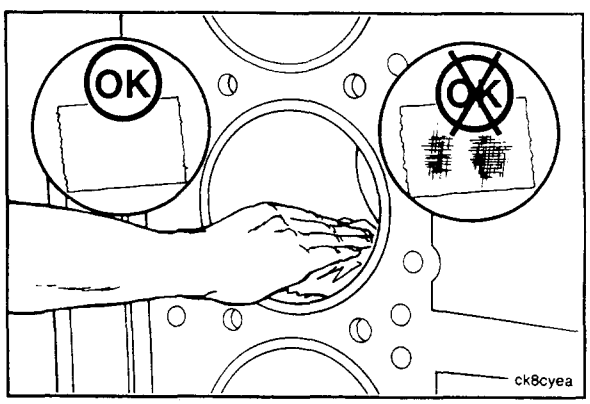

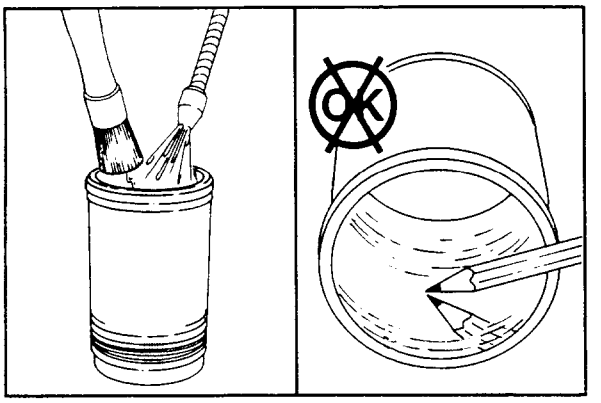


## Check for Reuse

**Note:** The cross-hatching visible in the bore is the result of the final honing process which establishes a surface finish to retain an oil film for ring lubrication and sealing.

1. Check the inside of the liner. If the liner contains a heavily polished area (cross-hatching not visible) the liner must be replaced. Refer to Procedure 07-26.

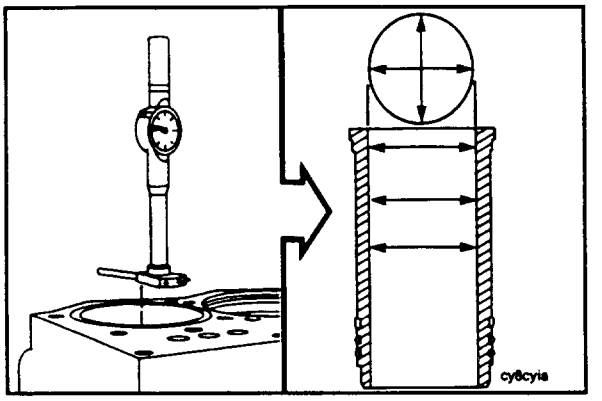


2. Use a dial bore gauge. Measure the I.D. of the liner at the top, the bottom, and the middle of the piston ring travel area.

   Take two measurements at each location. The measurements must be 90 degrees apart.

| Cylinder Liner I.D. | | |
|---|---|---|
| mm | | in |
| 158.737 | MIN | 6.2495 |
| 158.877 | MAX | 6.2550 |

**Note:** The I.D. of a new cylinder liner can be 0.015 mm [0.0006 inch] smaller than specifications because of the Lubrite coating.

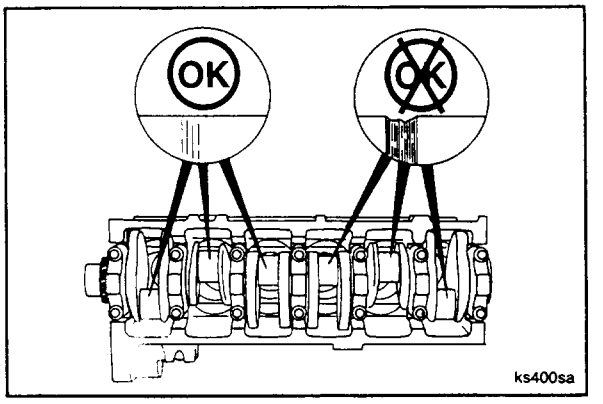


3. Check the crankshaft rod journals for damage.

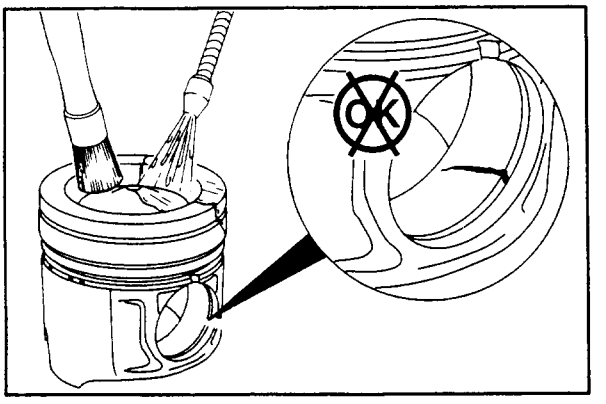


4. Clean and check the pistons for reuse. Refer to Procedure 07-25.

## Check Piston Ring Gap

1. To check the ring gap, install the piston ring in the cylinder liner which it will be used. Use the top part of the piston to position the ring in the liner correctly.

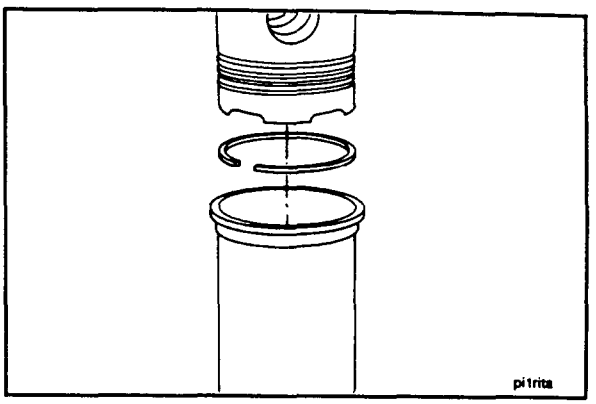


2. Use a feeler gauge to check the ring gap. Replace the ring if it does not meet the following specifications.

| Piston Ring Gap | | |
|---|---|---|
| Top | Intermediate | Oil |
| MIN 0.46 mm [0.018 in] | 0.76 mm [0.030 in] | 0.25 mm [0.010 in] |
| MAX 0.71 mm [0.028 in] | 1.14 mm [0.045 in] | 0.64 mm [0.025 in] |

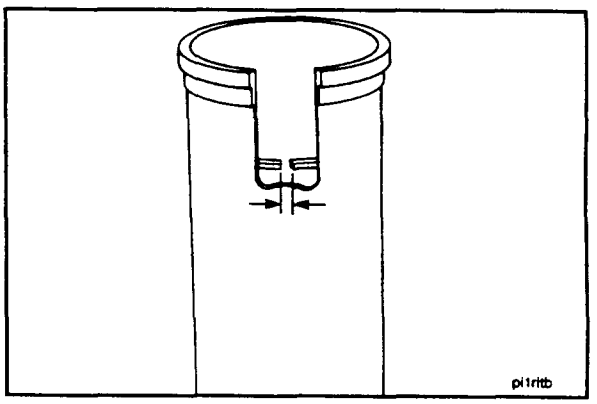


## Assemble Piston And Rod

1. Install one retaining ring in each piston.

**Caution: Wear protective gloves to prevent personal injury when handling hot parts.**

**Caution: The piston must be heated before installation.**

2. Use an oven with the temperature adjusted to 93°C [200°F]. Heat the piston for 15 minutes.

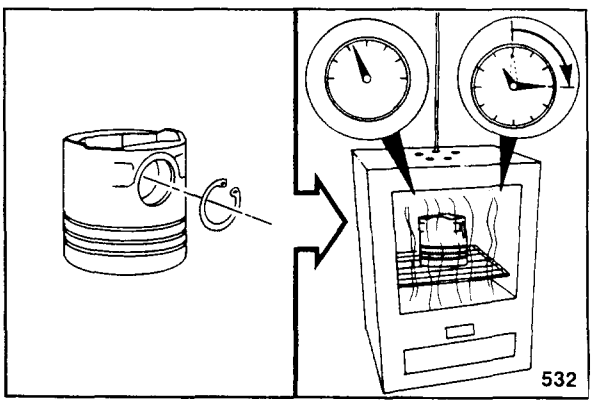


3. Lubricate the piston pin and connecting rod bushing with engine oil.

**Caution: Wear protective gloves to prevent personal injury when handling hot parts.**

**Caution: Do not use force to install the piston pin into the piston. Damage to the pin bore will result.**

4. Install the piston pin and the second retaining ring.

**Caution: Both retaining rings must be installed completely in the grooves.**

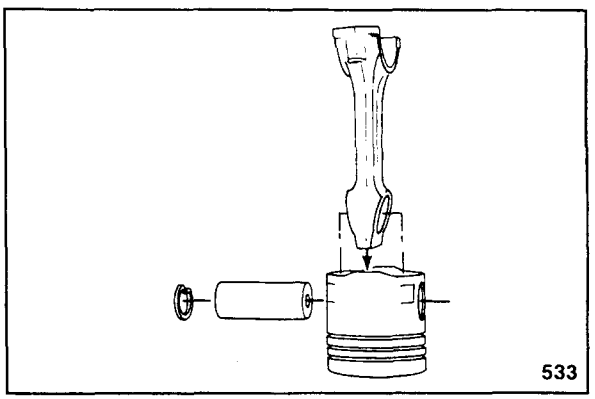

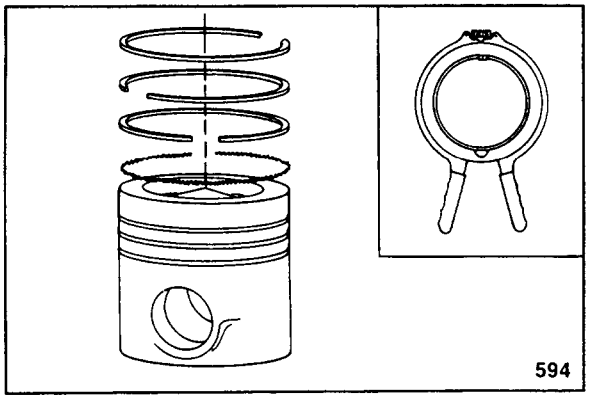


## Install

**Note:** The piston rings are marked with the part number. The shipping package is marked with the location.

The part number on the ring must be positioned toward the top of the piston.

1. Use a ring expander, Part No. ST-1269, or equivalent and install the piston rings.

**Note:** Do not align the gap of a ring with the piston pin bore.

**Note:** The gap in the oil ring expander (10) must be turned 180 degrees opposite the gap on the oil ring (11).

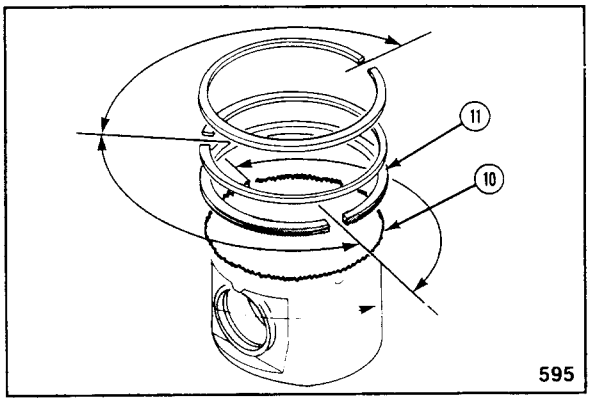


2. Rotate the rings until the gaps are positioned as shown.

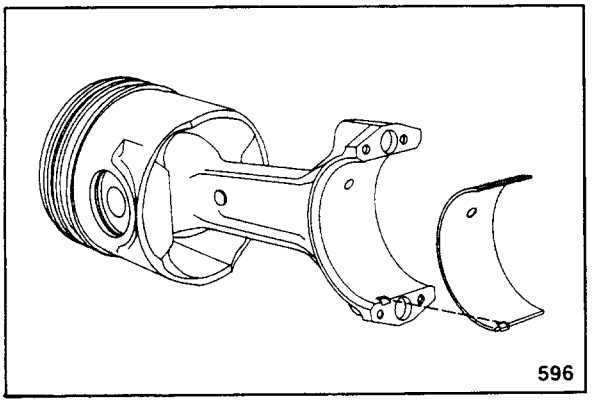


3. Use a lint free cloth. Clean the connecting rod and the bearing shells.
4. Install the rod bearing. Be sure the tang is positioned as shown. The end of the bearing must be even with the cap mounting surface.

**Caution: Do not lubricate the back side of the bearing shells.**

5. Lubricate the bearing surface with engine oil.The bearings must be installed in their original location if new bearings are not used.

**Note:** All of the rod bearings are identical.

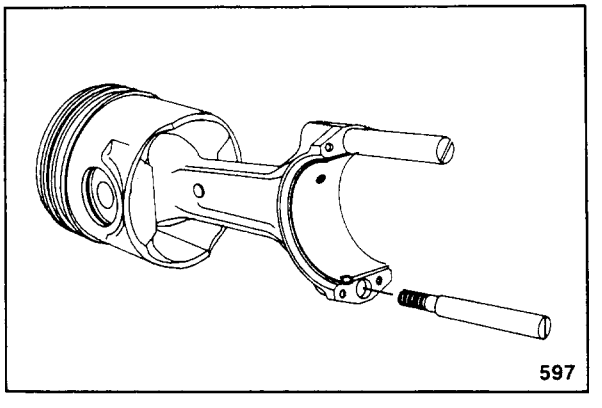


6. Install two connecting rod guide pins, Part No. 3375098, in the rod.

   The guide pins will help with assembly and protect the crankshaft.

**Caution: The connecting rods and caps are not interchangeable. The rods and the caps are machined as an assembly. Failure will result if they are mixed.**

7. Install the lower bearing shell in the rod cap. Make sure the tang of the bearing shell is in the slot of the cap and the end of the bearing is even with the cap surface.

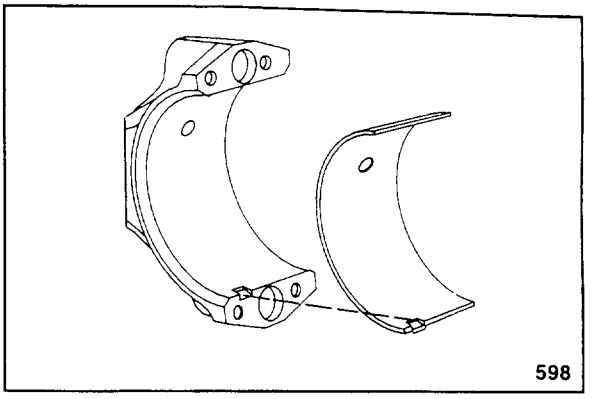


8. Lubricate the connecting rod capscrews and washers with engine oil as shown. Install the washers and capscrews in the caps.

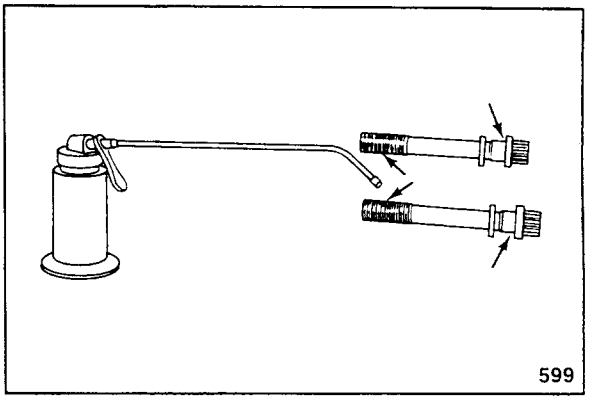


9. Lubricate the cylinder liner with engine oil. The entire bore must be lubricated.

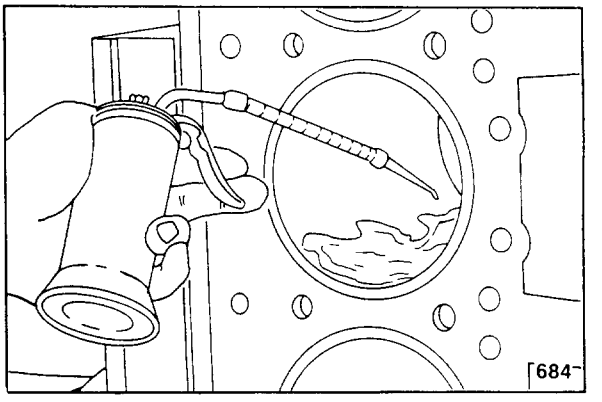


10. Immerse the piston in engine oil until the rings are covered.

    Allow the excess oil to drip off the assembly.

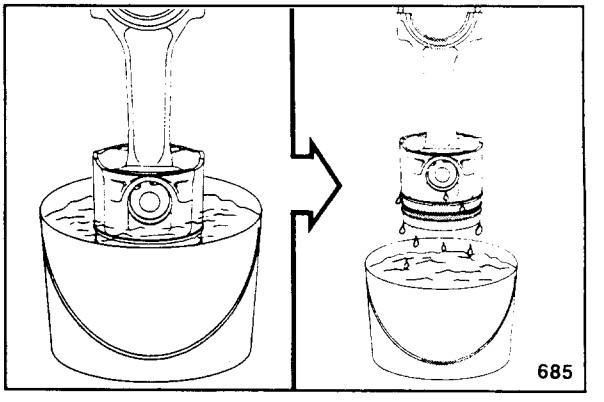

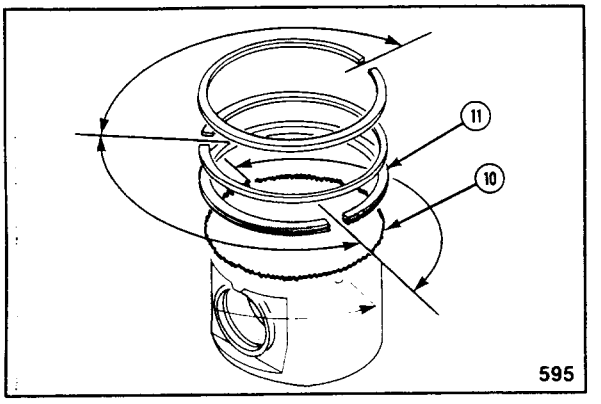


11. Check to be sure the ring gap position is still correct.

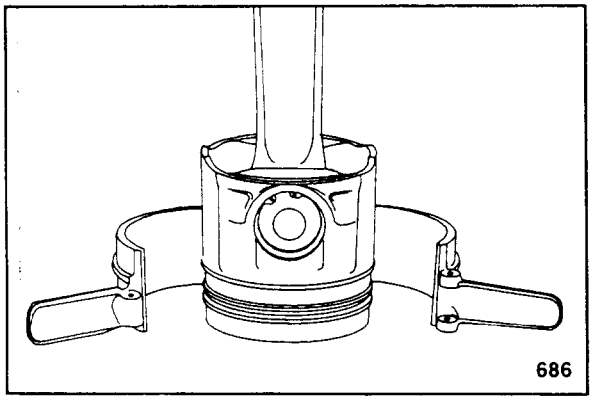


**Caution: Be sure the rings fit correctly in the piston ring grooves.**

12. Use a piston ring compressor, Part No. 3375342, or equivalent. Install the ring compressor on the piston.

**Note:** The ring compressor has a tapered bore. The small end of the taper must be towards the piston skirt.

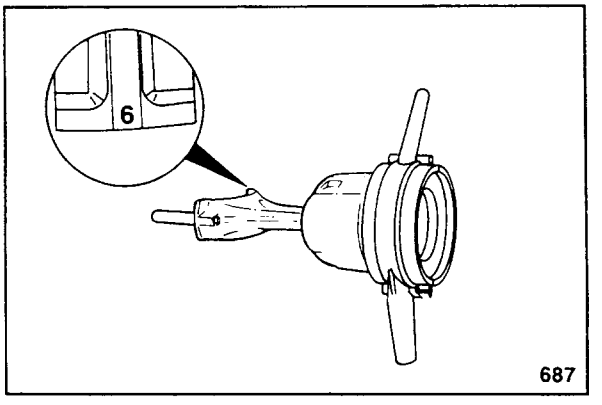


**Caution: The cylinder number on the rod and cap must be the same.**

**Caution: The side of the rod with the cylinder number (bearing tang side) must be toward the camshaft.**

13. Rotate the crankshaft until the journal for the rod being installed is at "BDC" bottom dead center.

**Note:** If the engine has a crankshaft with bolt-on counterweights, the journal must be at "TDC" top dead center.

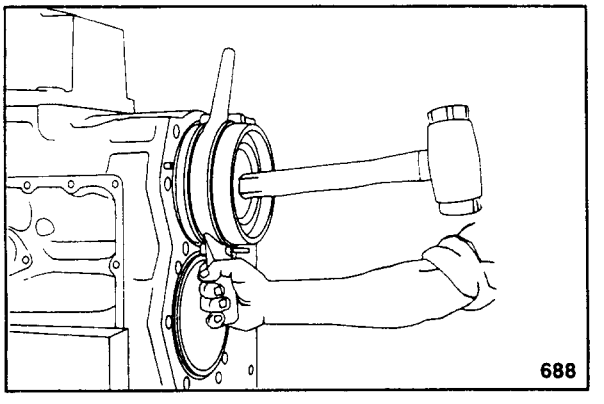


14. Install the rod and piston until the ring compressor touches the block. Align the rod with the crankshaft journal.

15. Hold the ring compressor firmly against the block. Use a wooden hammer handle to push the piston into the liner.

16. Push the piston into the bore until the rod bearing contacts the crankshaft journal. Remove the guide pins.

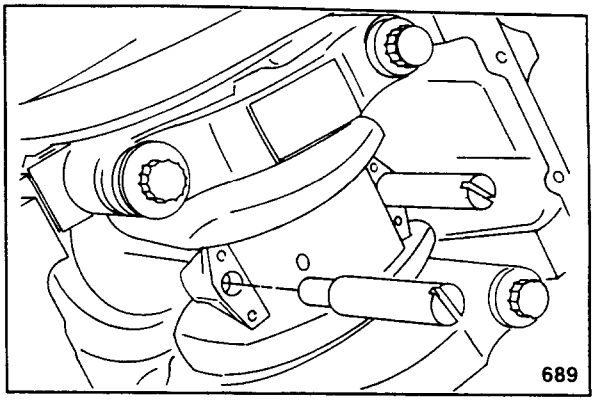


**Caution: The cylinder number on the rod and cap must be the same.**

**Caution: The side of the cap with the cylinder number marking (bearing tang side) must be towards the camshaft.**

17. Install the connecting rod cap.

18. Tighten the capscrews alternately and evenly to pull the cap over the dowel pins. Use the following steps to tighten the capscrews.

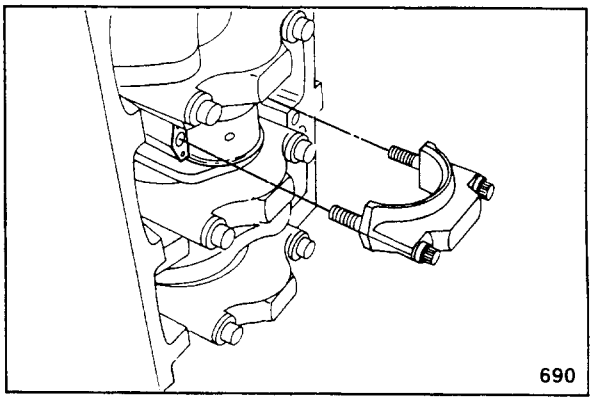


| Connecting Rod Cap Torque Values | | |
|---|---|---|
| N•m | Step | ft-lb |
| 100 | 1 | 75 |
| 205 | 2 | 150 |
| 290 | 3 | 215 |
| Loosen | 4 | Loosen |
| 100 | 5 | 100 |
| 205 | 6 | 150 |
| 290 | 7 | 215 |

19. Check the side clearance between the rod and the crankshaft. The side clearance must be a minimum of 0.20 mm [0.008 inch].

    The rod must move freely from side- to-side.

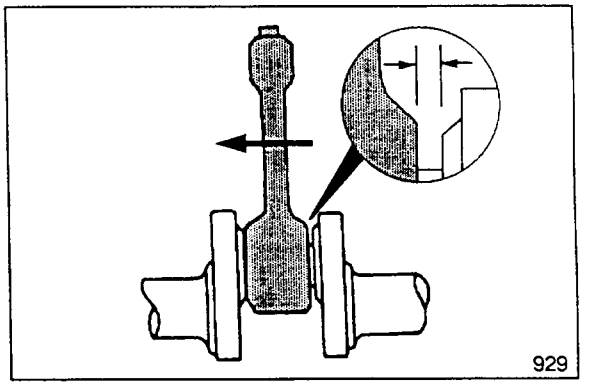

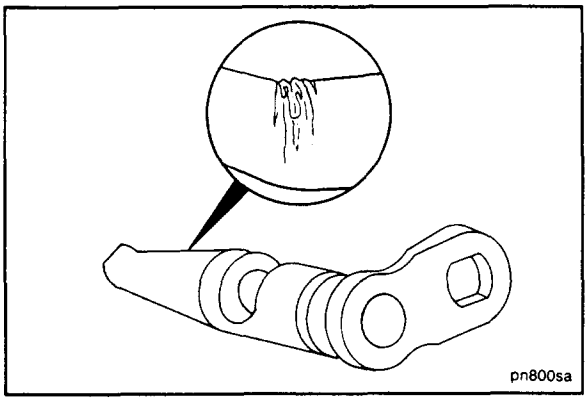


20. Check for missing or bent piston cooling nozzles. Refer to Procedure 07-21 to replace the nozzle.

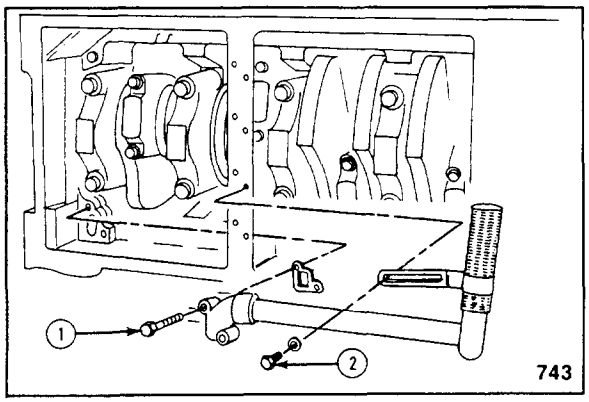


**Note:** Tighten the suction tube to the block capscrews (1) before installing any support bracket capscrews.

**Note:** The suction tube shape can vary from the illustration. All suction tubes attach to the block in the same manner.

21. Install the gasket, oil suction tube, washers, and capscrews. Tighten the capscrews to 60 N•m [45 ft-lb].

**Caution: Do not pry or bend the suction tube to get the support bracket capscrew holes to align.**

22. Connect the support bracket to the adapter with the capscrew (2). Tighten the capscrews to 35 N•m [25 ft-lb].

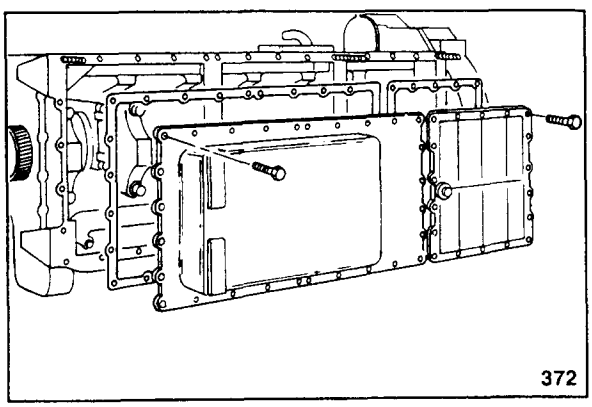


23. Install the oil sump and related components. Refer to Procedure 02-16.

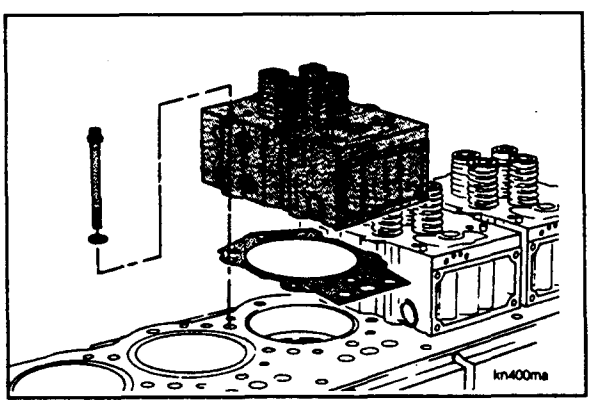


24. Replace the cylinder head and related components. Refer to Procedure 07-14.

25. Install new oil filter elements. Refer to Procedure 02-11.

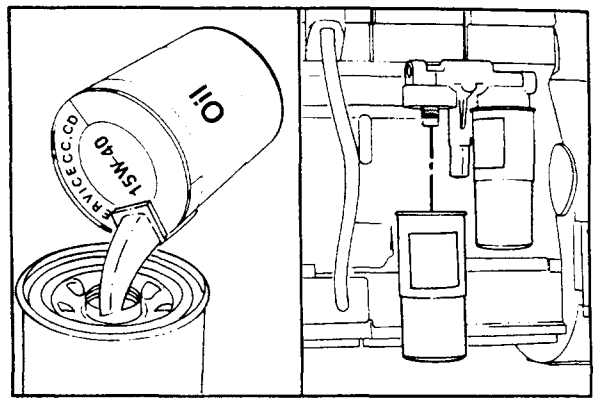


26. Fill the engine with clean 15W-40 oil. Refer to Procedure 02-10 for engineoil capacity.
27. Operate the engine to 70°C [160°F] coolant temperature and check for leaks.

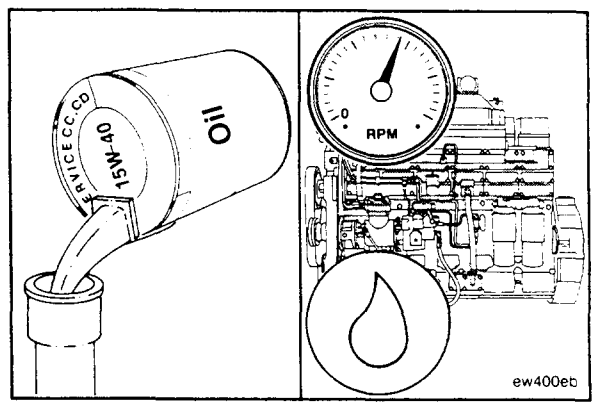


## Piston - Clean And Check For Reuse (07-25)

1. Use a piston ring expander, Part No. ST-1269, or equivalent. Remove and discard the piston rings.

**Caution: Wear protective clothing to prevent personal injury from burns.**

**Note:** Premium pistons have an anodized surface that is gray in appearance. Do not attempt to remove this surface when cleaning.

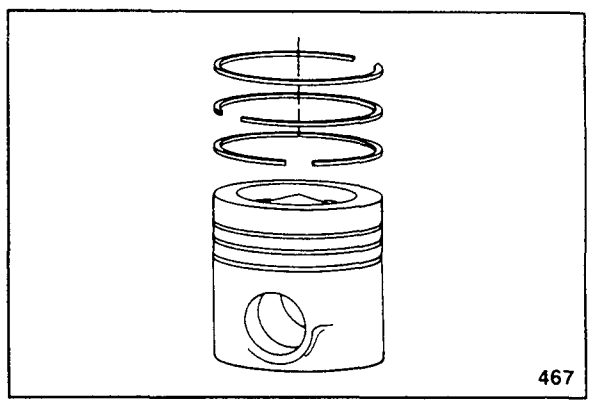


2. Use steam to clean the outer layers of carbon from the piston surface. The bead blast method can be used to clean the top of the piston. If this method is used cover the ring grooves and skirt securely.

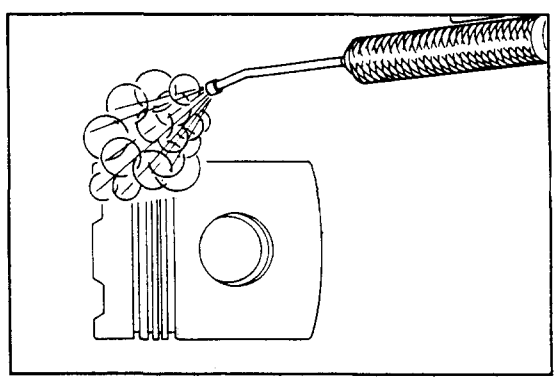

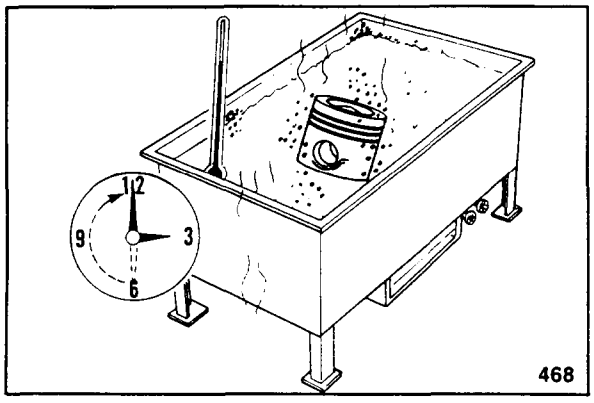


**Caution: Do not contaminate the wash tank solution with bead blast materials.**

**Use a kerosene emulsion based solvent. Do not use a solvent that is higher than 9.5 pH. Do not use a solvent that contains chlorinated hydrocarbons with cresols, phenols, or cresylic components.**

3. Allow the pistons to soak in the solvent a minimum of 30 minutes.

**Note:** For best results soak the pistons several hours, or overnight. Use a solvent that can be heated 90°C to 95°C [180°F to 200°F]. Use a cleaning tank that will circulate and filter the solvent.

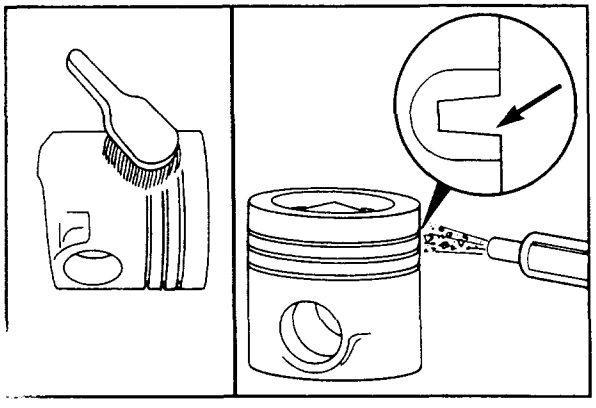

**Caution: Do not use the bead blast method to clean the ring grooves or the skirt. The piston will be damaged by blast material being embedded in the aluminum.**

**Caution: Do not use a metal bristle brush to clean the pistons. Damage to the ring grooves will result.**

4. Use a brush to clean the aluminum ring grooves. Walnut shell blasting can be used on the ni-resist insert.

   Repeat the soaking and scrubbing process until the piston is thoroughly clean.

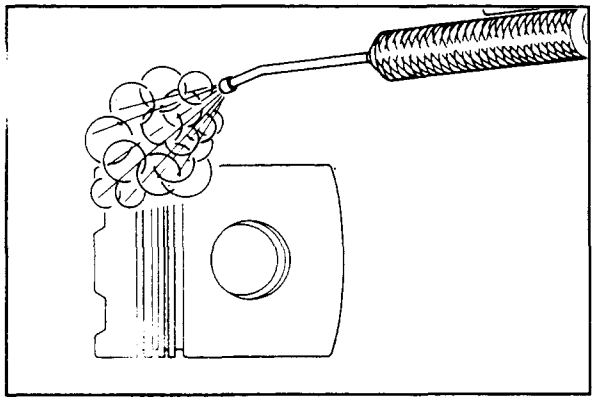

5. Use steam to rinse the solvent from the pistons. Dry the pistons with compressed air.

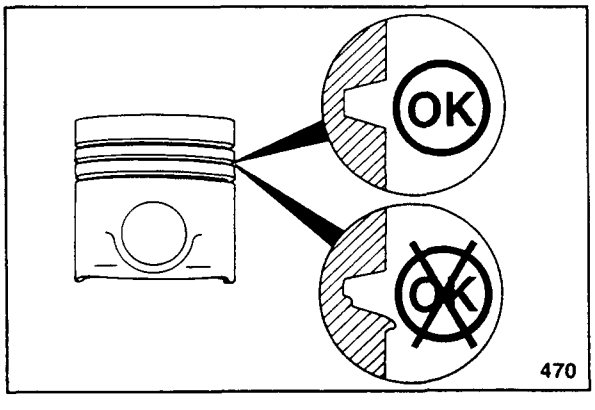


6. Check the ring grooves. The pistons must be replaced if there is a visible ridge in the back of the groove. The piston must be replaced if a lip has formed on the O.D. of the groove.

7. Use piston ring gauge, Part No. ST-560, and measure both compression ring grooves.

   The piston must be replaced if any measurement is not within specification.

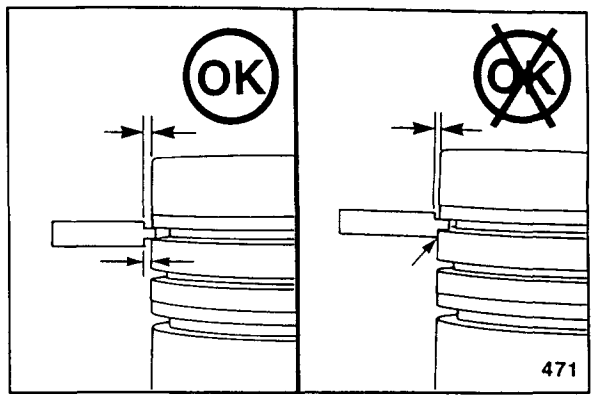


8. Use crack detection kit, Part No. 3375432, or equivalent. Check for cracks on the top of the piston and in the piston pin bore.

**Note:** The crack detection kit contains the cleaner, penetrant, and developer necessary to check for cracks using the dye penetrant method.

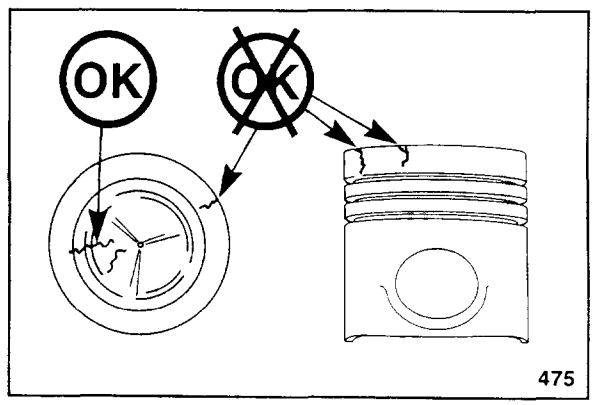


9. The piston must be replaced if there is a crack in any of the following areas:
   - In the piston pin bore.
   - On the top of the piston that extends more than half the distance across the shaded area as shown.
   - On the top that extends over the rim and towards the ring groove.

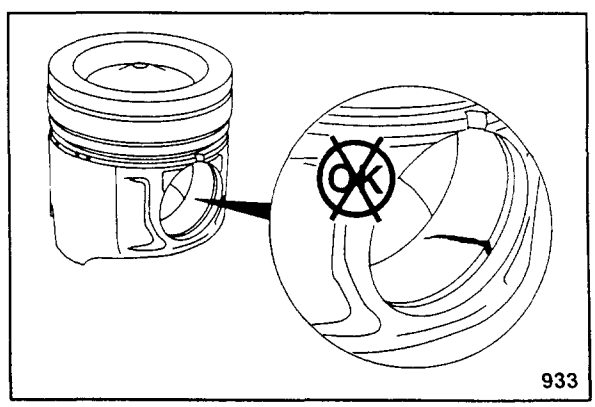


10. Measure the oil ring groove. The piston must be replaced if it is not within specification.

| Piston Oil Ring Groove Width | | |
|---|---|---|
| mm | | in |
| 4.788 | MIN | 0.1885 |
| 4.851 | MAX | 0.1910 |

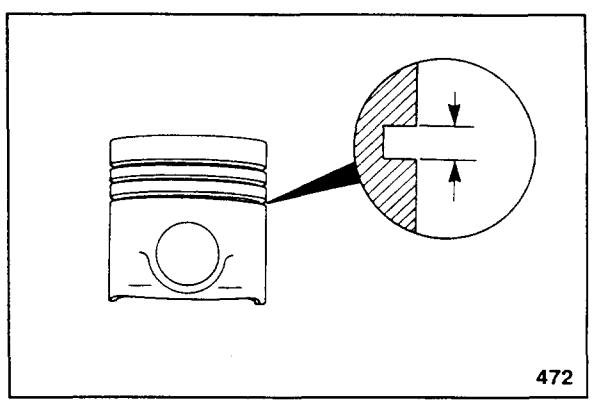

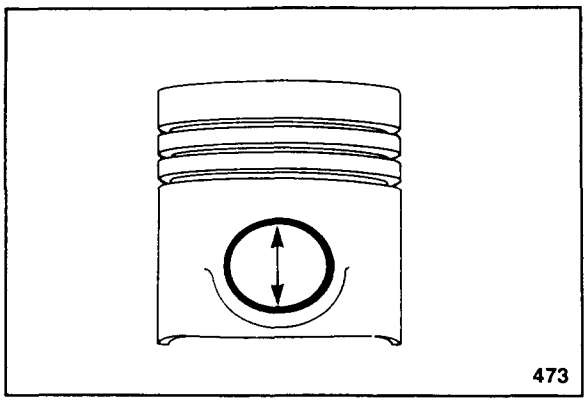


The piston measurement is to be recorded at room temperature of approximately 21°C [70°F].

11. Measure and record the I.D. of the piston pin bore at several points as shown. The piston must be replaced if the smallest I.D. measurement is not within specifications.

| Piston Pin Bore I.D. | | |
|---|---|---|
| mm | | in |
| 60.922 | MIN | 2.3985 |
| 60.932 | MAX | 2.3989 |

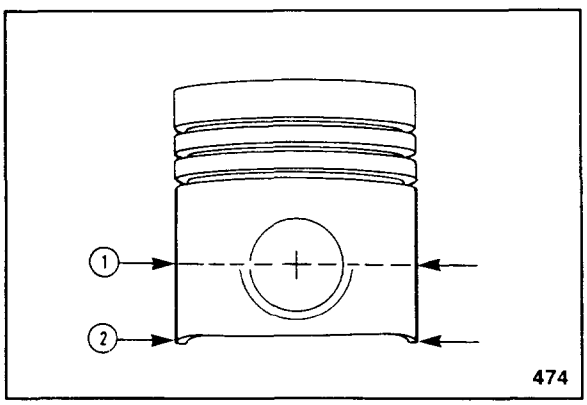


The piston measurement is to be recorded at room temperature of approximately 21°C [70°F].

12. Measure the piston skirt at the center line of the piston pin bore (1) and about 3 mm [1/8 inch] from the bottom (2).

| Piston Skirt O.D. | | |
|---|---|---|
| mm | | in |
| (1)158.42 | MIN | 6.237 |
| 158.471 | MAX | 6.2390 |
| (2) *158.47 | MIN | 6.239 |
| 158.540 | MAX | 6.2418 |
| (2)**158.42 | MIN | 6.237 |
| 158.493 | MAX | 6.2399 |

* Part No. 3004730 only

** All other pistons

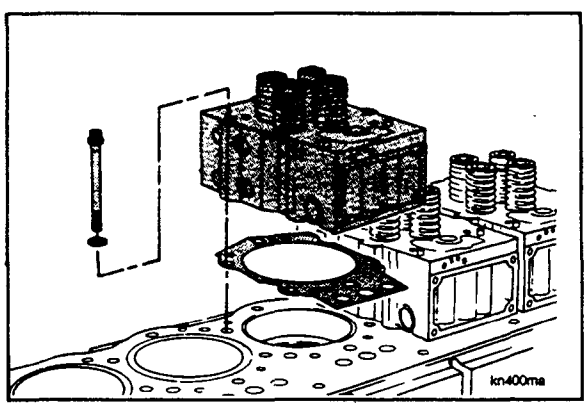


# Cylinder Liner - Remove (07-26)

## Remove

1. Remove the cylinder head. Refer to Procedure 07-14.

2. Remove the piston and connecting rod. Refer to Procedure 07-24.

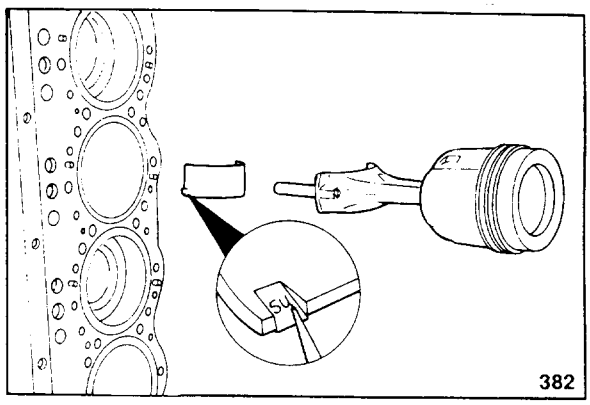

382

## Remove The Cylinder Liner

1. Use the universal liner puller, Part No. 3376015.

   Loosen the set screws (44). Turn the feet (45) of the puller until the curved side turns away from the center as shown. Move the holding pins (46) to the last hole as shown.

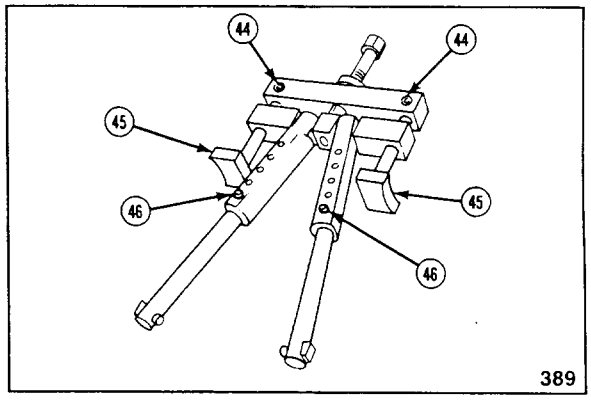

389

2. Install the tool in the cylinder liner. The puller feet must not touch the top of the liner. The puller arms must be positioned firmly on the bottom of the liner.

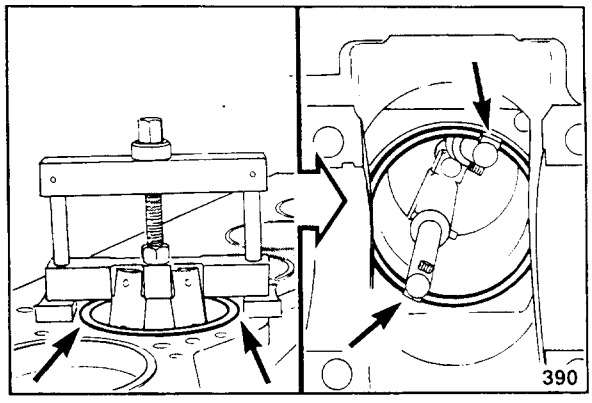
390

3. Turn the puller screw until the liner loosens in the block. Remove the tool and the liner.

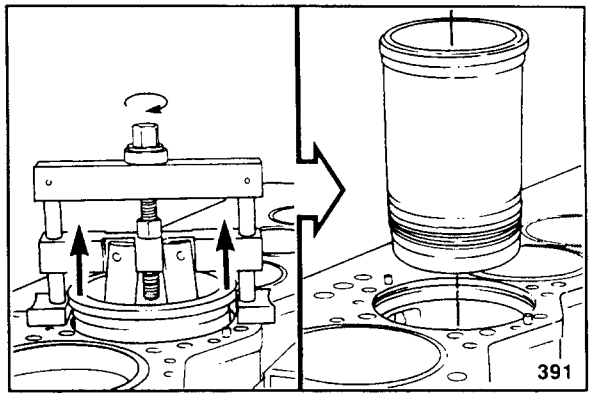
391

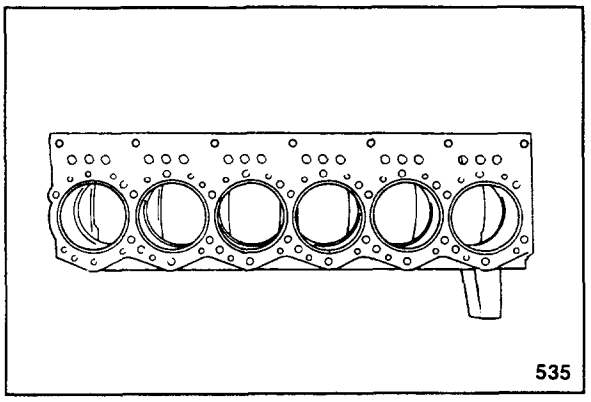


## Check for Reuse

**Warning: Naptha and methyl ethyl ketone are flammable materials. Use caution to prevent personal injury. Follow the manufacturer's instructions. Do not use starting fluid.**

1. Use a hydrocarbon solvent, such as naptha, methyl ethyl ketone, trichorethane 1,1,1 (methyl chloroform), or equivalent to clean the counterbore.

**Note:** The counterbore ledge must be clean and dry. The sealant used in assembly will not dry if there is oil on the ledge.

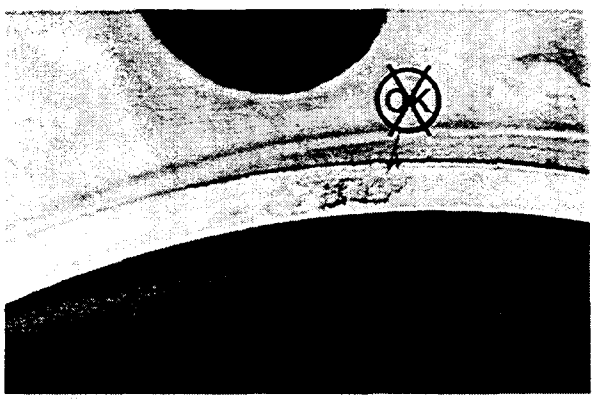


2. Pitting on the liner seat is not acceptable. This close-up view of the damage area reveals the pitting.

   This block requires counterbore machining before it can be reused. Refer to the K19 Shop Manual.

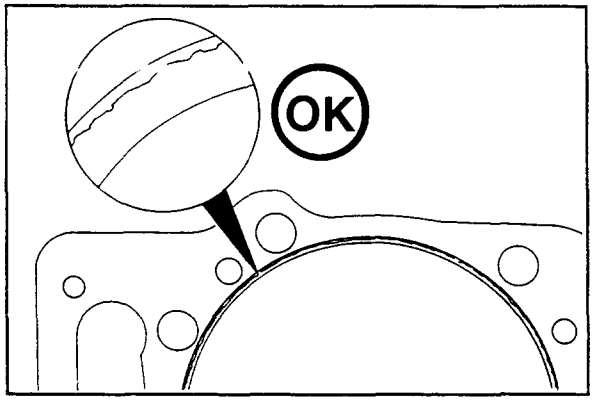


## Check For Cracks

1. Use a crack detection kit, Part No. 337532 or equivalent, and check the counterbore ledge for cracks.
2. Hairline cracks on the counterbore seat are not detrimental.
3. Hairline cracks which remain after machining for an oversize liner or salvage sleeve are acceptable.

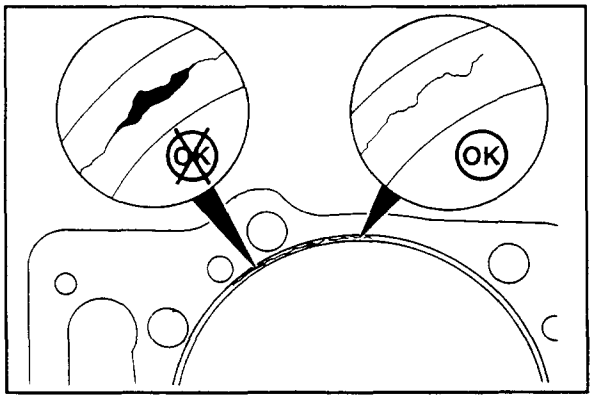


4. Open cracks require counterbore machining and re-evaluation.

   If the cracks are closed after machining, the counterbore is acceptable for reuse.

## Capscrew Hole Cracks

1. Cracks which extend from the counterbore wall to the capscrew hole are acceptable for reuse if it does not extend into threaded portion of hole.

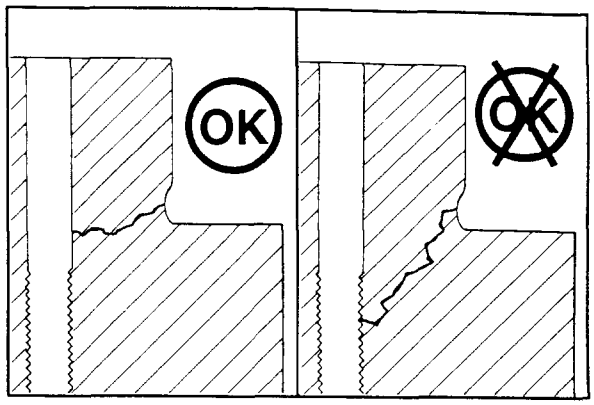


2. Cracks which extend into threaded portion of the hole require salvage with a blind end thread insert. Refer to the Alternative Repair Manual.

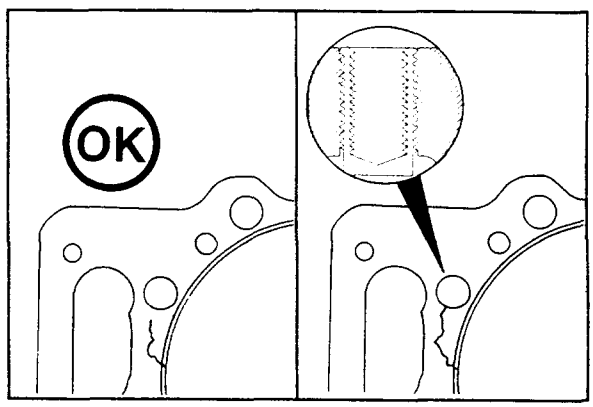


## Identify Counterbore Design

To measure the block properly, the counterbore design must be determined first.

Definition of numerical terms (call-outs):

a. Upper counterbore inside diameter

b. Counterbore depth

c. Lower counterbore inside diameter

d. Packing ring bore

e. Counterbore ledge

f. Counterbore radius

Use the following illustrations to determine the counterbore design of the block being serviced.

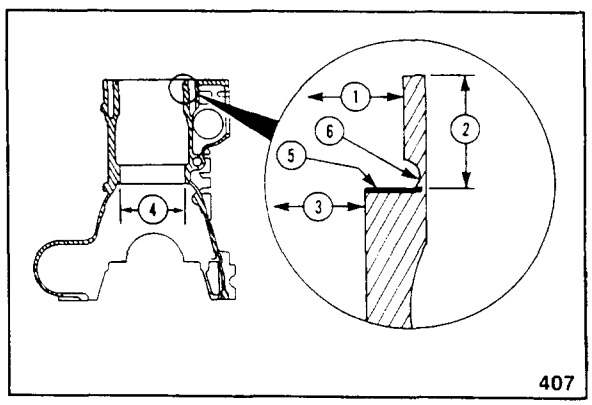

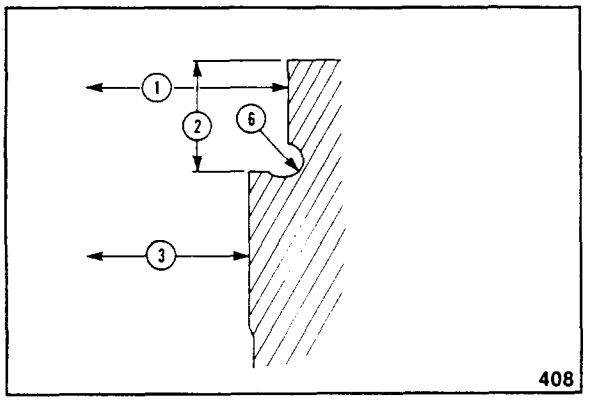


## Thick flange production:

1. Most engines with engine serial number (E.S.N.) greater than 31121670 contain this design.

   (1) The actual size will depend on whether standard or oversize liners were installed.

| mm | in |
|---|---|
| 188.16 to 188.21 | [7.408 to 7.410] |
| 188.66 to 188.71 | [7.428 to 7.430] |
| 189.17 to 189.22 | [7.448 to 7.450] |
| 189.69 to 189.74 | [7.468 to 7.470] |
| 190.27 to 190.32 | [7.491 to 7.493] |
| 190.58 to 190.63 | [7.503 to 7.505] |

   (2) 13.23 to 13.28 [0.521 to 0.523]

   The depth can be as much as 2.37 mm [0.093 inch] greater if the block was machined previously to use shims.

   (3) 180.07 to 180.14 [7.090 to 7.092]

   (6) The counterbore radius has a double undercut.

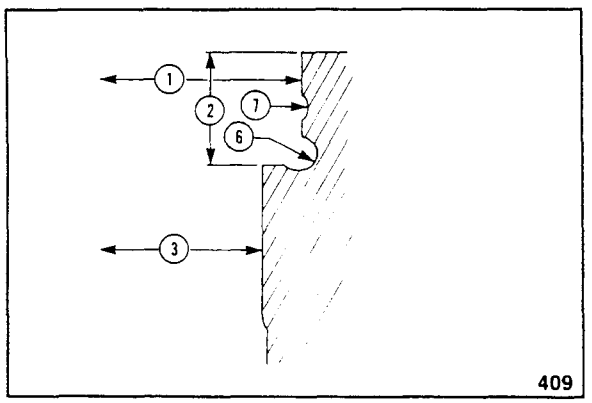


## Thin flange - factory modified to thick flange design

1. Some blocks with an E.S.N. greater than 31121670 will contain this counterbore design. The dimensions are identical to the dimensions for the thick flange design.

   (7) The groove is a result of the factory modification. The groove has no functional use.

   (6) The counterbore radius has a double undercut identical to the thick flange design.

## Thin flange - field modified to thick flange design.

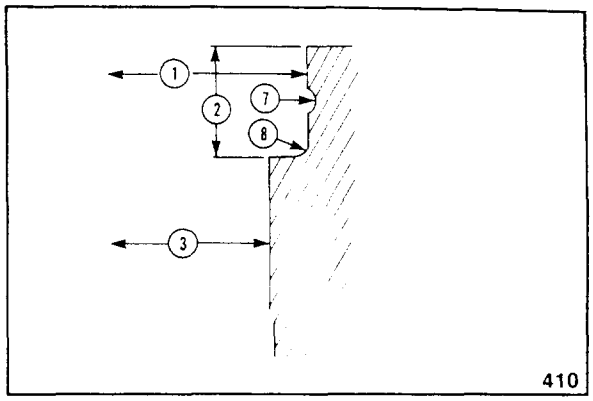


1. Engines with an E.S.N. between 31103629 and 31121669 were originally manufactured with the thin flange design. Some of the engines have been modified to the thick flange design in the field.

   (1) The actual size will depend on the oversize liners that were installed at the time of the field modification.

| mm | in |
|---|---|
| 189.69 to 189.74 | [7.468 to 7.470] |
| 190.27 to 190.32 | [7.491 to 7.493] |
| 190.58 to 190.63 | [7.503 to 7.505] |

   (2) 13.23 to 13.29 [0.521 to 0.523]

   The depth can be as much as 2.37 mm [0.093 inch] greater if the block was machined previously to use shims.

   (3) 180.07 to 180.14 [7.090 to 7.092]

   (7) The groove is a result of the factory modification. The groove has no functional use.

   (8) The counterbore radius is not a double undercut. This design has a radius of 1.73 mm to 1.85 mm [0.068 to 0.073 inch].

## Thin flange design

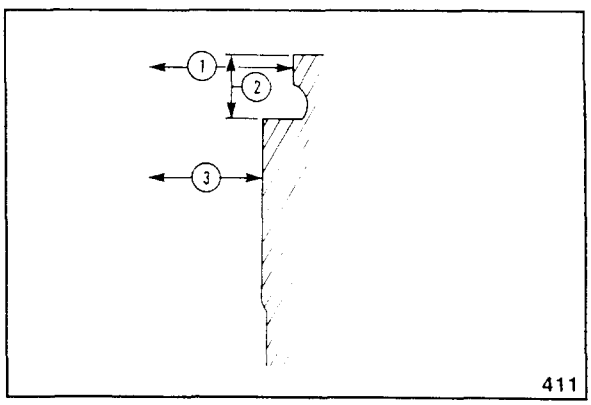


1. Engines with an E.S.N. between 31103629 and 31121669 contained this design at the time of manufacture.

   (1) The actual size will depend on whether standard or oversize liners were installed.

| mm | in |
|---|---|
| 187.93 to 187.99 | [7.399 to 7.401] |
| 188.19 to 188.24 | [7.409 to 7.411] |
| 188.44 to 188.49 | [7.419 to 7.421] |

   (2) 7.62 to 7.67 [0.300 to 0.302]

   The depth can be as much as 2.88 mm [0.113 inch] greater if the block was machined previously to use shims.

   (3) 180.07 to 180.14 [7.090 to 7.092]

**Note:** Oversize thin flange cylinder liners are no longer available. If oversize liners are required, the block must be machined to use the thick flange liners.

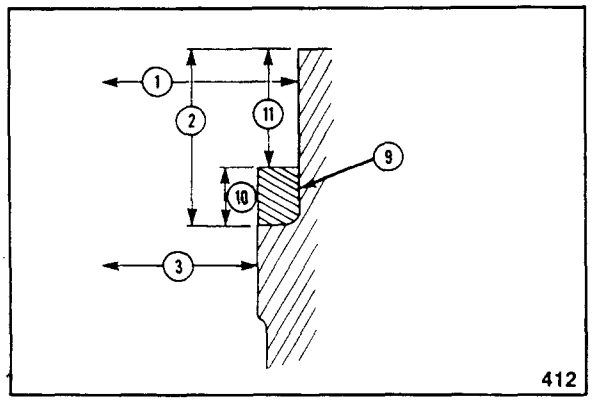


## Counterbore ring - thick flange design

1. Engines with an E.S.N. between 31101150 and 31103628 contain this design.

   (1) The actual size will depend on whether standard or oversize liners were installed.

| mm | in |
|---|---|
| 190.284 to 190.335 | [7.4915 to 7.4935] |
| 190.538 to 190.589 | [7.5015 to 7.5035] |
| 190.792 to 190.843 | [7.5155 to 7.5135] |
| 191.046 to 191.097 | [7.5215 to 7.5235] |
| 191.300 to 191.351 | [7.5315 to 7.5335] |

   (2) 18.31 to 18.36 [0.721 to 0.723]

   The depth can be as much as 3.39 mm [0.133 inch] greater if the block was machined previously to use shims and oversize liners.

   (3) 181.74 to 181.79 [7.155 to 7.157]

**Note:** This design contains a counterbore ring (9) to obtain the same counterbore depth (11) as the thick flange design. (10) Standard counterbore ring thickness is 5.055 to 5.067 mm [0.1990 to 0.1995 in.].

**Note:** Counterbore rings (9) that are thicker than the standard rings are available in two sizes 0.05 mm [0.002 inch] and 0.10 mm [0.004 inch] thicker than standard.

**Note:** If the upper counterbore is not within standard specifications, the block must be machined to use oversize K38 and K50 cylinder liners.

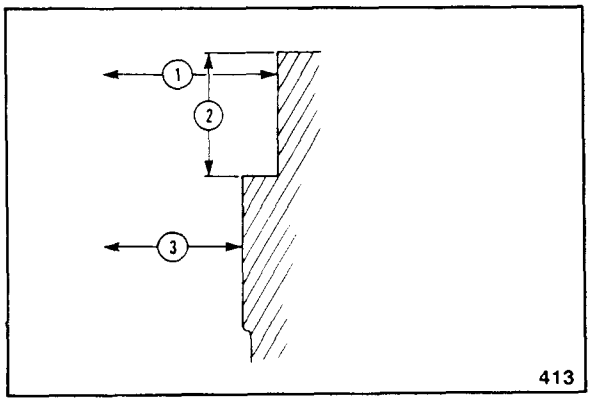


## K38 or K50 counterbore design

1. Engines with an E.S.N. between 31100101 and 31101149 contain this design. Most of the engines have been modified in the field to the counterbore ring thick flange design.

| mm | in |
|---|---|
| (1) 190.284 to 190.335 | [7.4915 to 7.4935] |
| (2) 13.23 to 13.29 | [0.521 to 0.523] |

   The depth can be as much as 2.37 mm [0.093 inch] greater if the block was machined previously to use shims.

   (3) 181.74 to 181.79 [7.155 to 7.157]

**Note:** If the upper counterbore is not within standard specifications, the block must be machined to use oversize K38 and K50 cylinder liners.

## Measure Counterbore Dimensions

**Note:** Be sure the micrometer contacts the flat surface of the ledge. It must not touch the radius.

1. Use a depth micrometer and measure the counterbore depth at the four places shown.

   The four measurements must not vary more than 0.25 mm [0.001 inch]. If the measurements exceed the specifications, the counterbore ledge must be machined. Refer to the K19 Shop Manual.

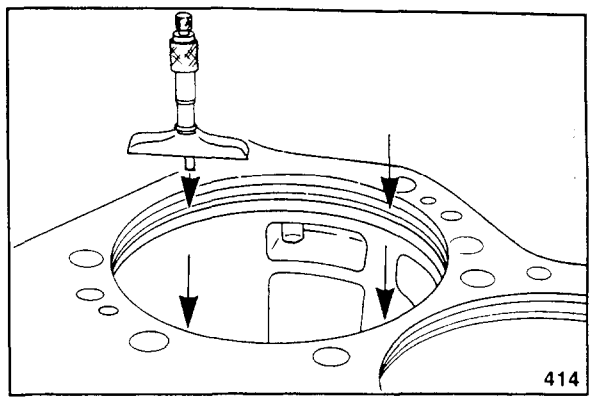


**Note:** Be sure that the indicator does not contact the counterbore radius on a block that does not have a double undercut.

2. Use A gauge block, Part No. ST-547. Measure the angle of the counterbore ledge at four places on the counterbore circumference.

   The measurement of the ledge depth must be as near to the counterbore radius as possible, and as near to the counterbore edge as possible.

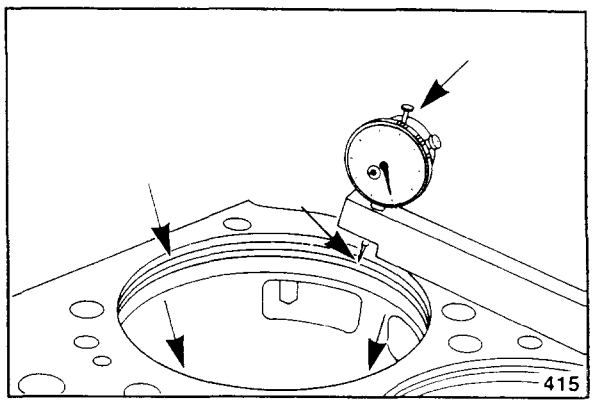


## Inspect Counterbore

1. The angle (12) of the counterbore ledge is acceptable (OK) if the measurement that is near the counterbore edge (1) is the same or on more than 0.036 mm [0.0014 inch] shorter than the measurement near the counterbore radius (2).

   If the measurement near the counterbore ledge is longer than the measurement near the counterbore radius, the ledge must be machined. Refer to the K19 Shop Manual.

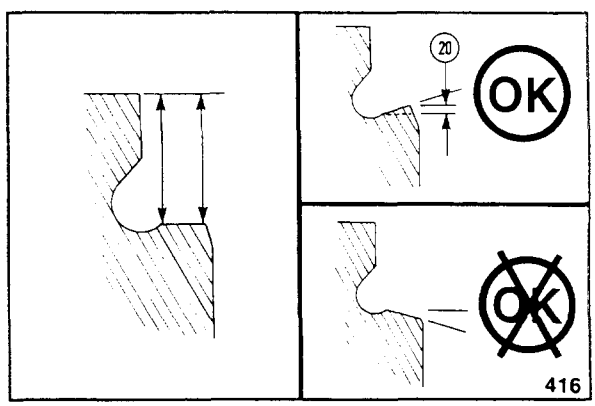


2. Measure the I.D. of the upper counterbore. The point of measurement must be within 2.54 mm [0.100 inch] from the top of the block.

   The I.D. of the upper counterbore must be completely round within 0.025 mm [0.001 inch]. If the measurement is not within specification, check to see if the block can be machined to use oversize liners. Refer to the K19 Shop Manual.

**Note:** The upper counterbore must be no more than 0.025 mm [0.001 inch] larger than the cylinder liner flange, or no more than 0.076 mm [0.003 inch] smaller than the cylinder liner flange.

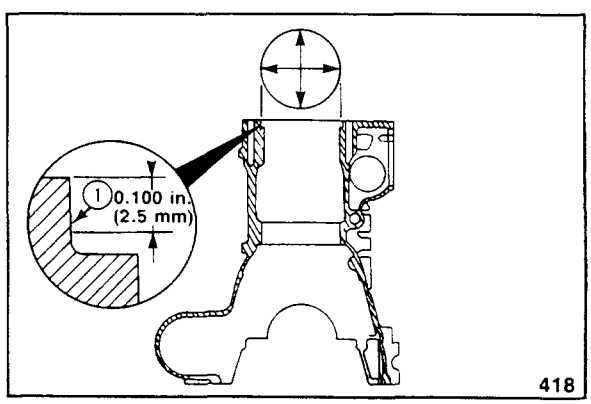

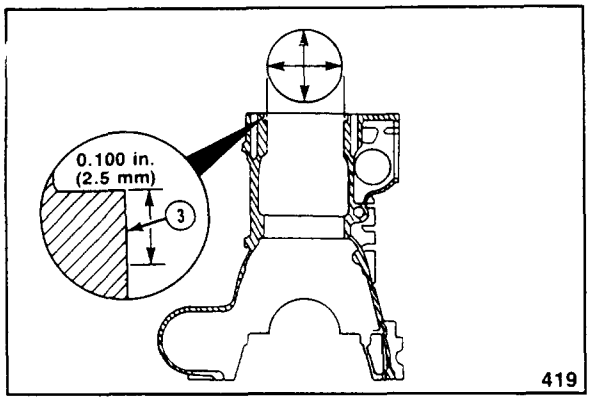


3. Measure the I.D. of the lower counterbore. The point of measurement must be within 2.54 mm [0.100 inch] from the top of the counterbore ledge.

   The I.D. of the lower counterbore must be completely round within 0.025 mm [0.001 inch].

   If the block is not within specifications, do not use the block.

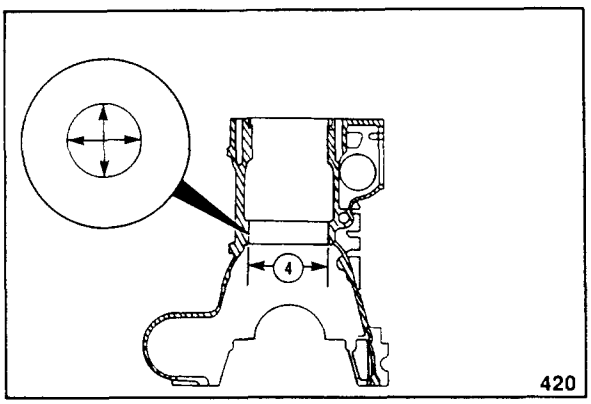


4. Check the chamfer at the top of the packing ring bore. Excessive pitting must be repaired. Refer to the Alternative Repair Manual.

| (4) Packing Ring Bore | | |
|---|---|---|
| mm | | in |
| 177.34 | MIN | 6.982 |
| 177.39 | MAX | 6.984 |

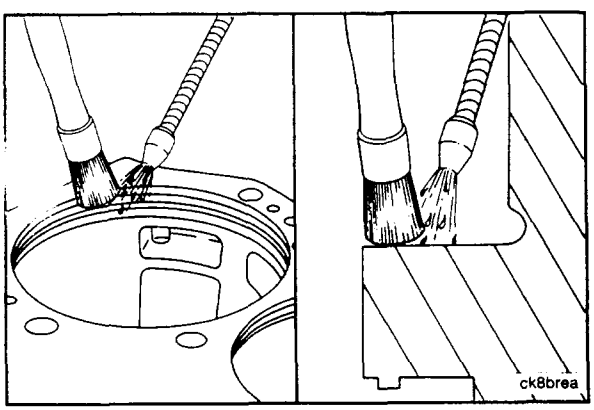


## Install Cylinder Liner

**Warning: Naptha and methyl ethyl ketone are flammable materials. Use caution to prevent personal injury. Follow the manufacturers instructions. Do not use starting fluid.**

1. Use a hydrocarbon solvent, such as naptha, methyl ethyl ketone, trichorethane 1,1,1 (methyl chloroform), or equivalent to clean the counterbore.

   Clean the bottom of the cylinder liner flange.

**Caution: The cylinder liner flange must be clean and dry. The sealant used in assembly will not dry if there is oil on the ledge.**

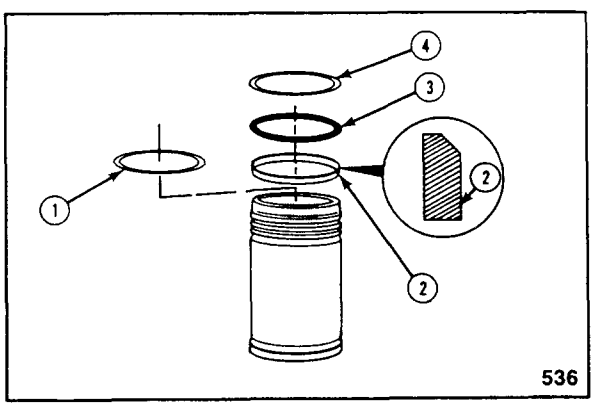


2. Install the shim(s) (1) if required.

**Caution: Do not lubricate the crevice seal and o-rings. Oil may get on the counterbore ledge during assembly.**

3. Install the crevice seal. The beveled edge of the crevice seal (2) must be positioned as shown.

**Note:** Some o-rings have a "D" shape cross section. This type of o-ring must be installed with the flat side against the cylinder liner.

4. Install o-rings in the position shown. Use the mold mark on the o-ring to check if the o-ring is twisted.

   (3) Black o-ring
   (4) Red o-ring

5. Lubricate the I.D. of the packing ring bores with vegetable oil.

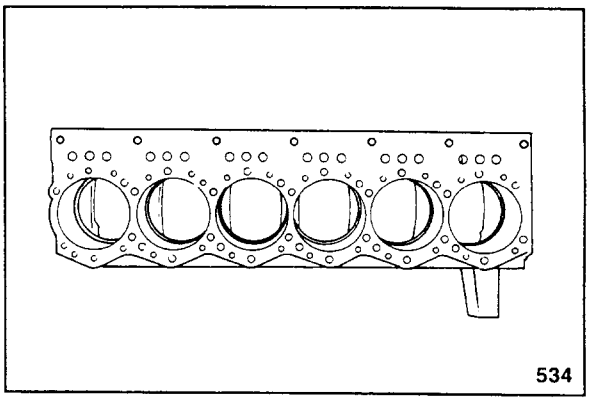


**Note:** The parts must be installed within 10 minutes after applying the sealant.

**Caution: An excessive amount of sealant will cause engine damage.**

6. Use Cummins sealant, Part No. 3377132. Apply a bead of sealant to the bottom of the cylinder liner. If the block is a counterbore ring type, the sealant must be applied to the bottom of the counterbore ring (5).

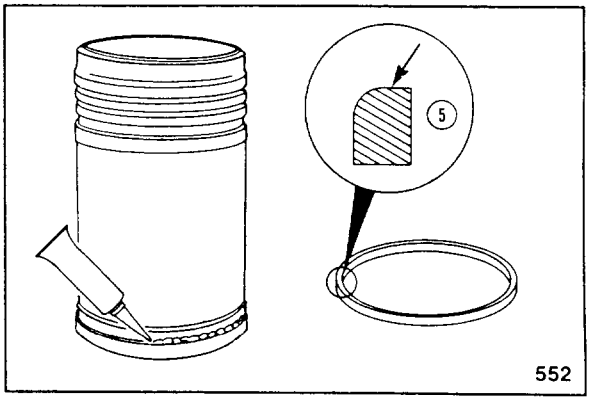


| Sealant Bead Size | | |
|---|---|---|
| mm | | in |
| 1.1 | MIN | 3/64 |
| 1.6 | MAX | 1/16 |

**Note:** The sealant will not alter the cylinder liner protrusion measurement. It will prevent coolants leaks by filling small spaces between the liner flange and the block.

**Note:** Some blocks do not require counter ring.

Install the counterbore ring. The counterbore ring must be positioned with the curved edge as shown.

7. Use your hands to push the liner into the block.

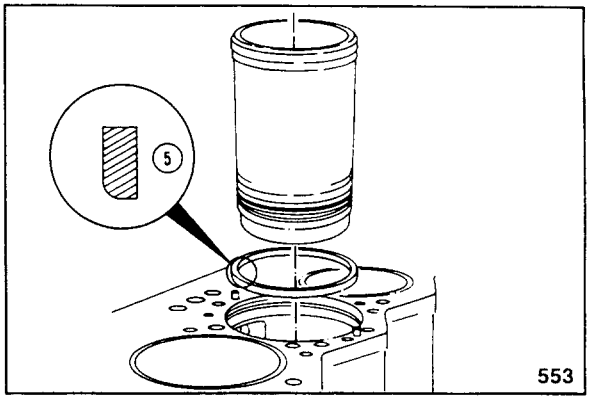


8. Use liner installation tool, Part No. 3375422, or equivalent. Install the bridge assembly and two cylinder head capscrews. Tighten the capscrews to 45 N•m [35 ft-lb].

   Install the pusher plate in the liner. Be sure it is aligned correctly in the liner. Turn the pusher screw until it touches the plate.

   Turn the pusher screw until the liner flange touches the counterbore ledge. Do not use more than 65 N•m [50 ft-lb] of torque. Remove the tool.

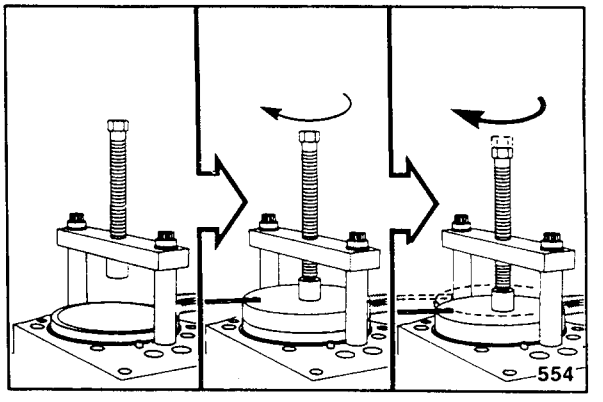

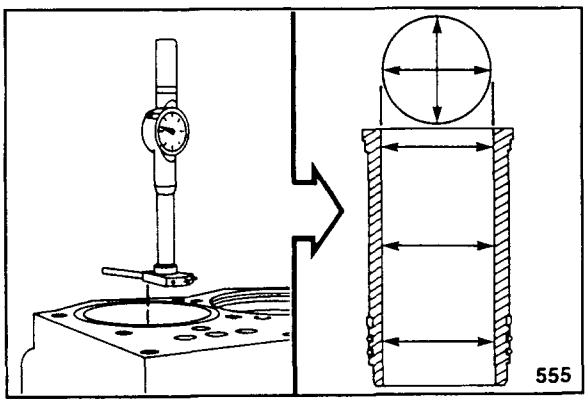


**Note:** New cylinder liners can be 0.005 mm to 0.015 mm [0.0002 inch to 0.0006 inch] smaller than the minimum specifications because of the Lubrite coating.

Use a dial bore gauge and measure the I.D. of the liner at the Top, Bottom, and Middle.

9. Take two measurements at each location. The measurements must be 90 degrees apart.

| Cylinder Liner I.D. (New) | | |
|---|---|---|
| mm | | in |
| 158.737 | MIN | 6.2495 |
| 158.775 | MAX | 6.2510 |

The I.D. must be no more than 0.076 mm [0.003 inch] out-of-round at the top two measurements.

If the I.D. is more than 0.05 mm [0.002 inch] out-of-round in the bottom measurement location, the liner must be removed. Check for a twisted o-ring.

**Note:** A new bead of sealant must be applied if the liner is removed and installed again.

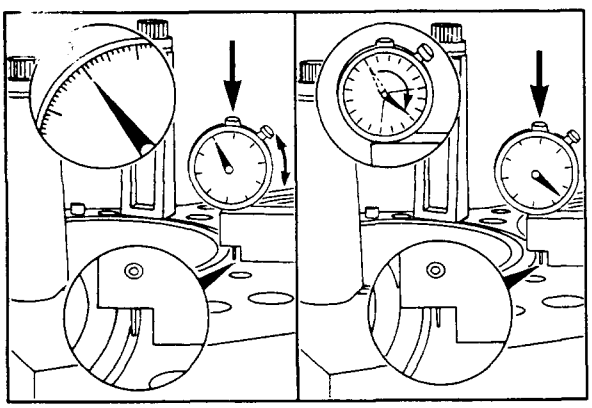

10. Check the liner protrusion. Refer to Procedure 07-27.

    If the protrusion is not correct remove the liner. The protrusion can be adjusted using shims and/or machining the counterbore ledge. Refer to the K19 Shop Manual.

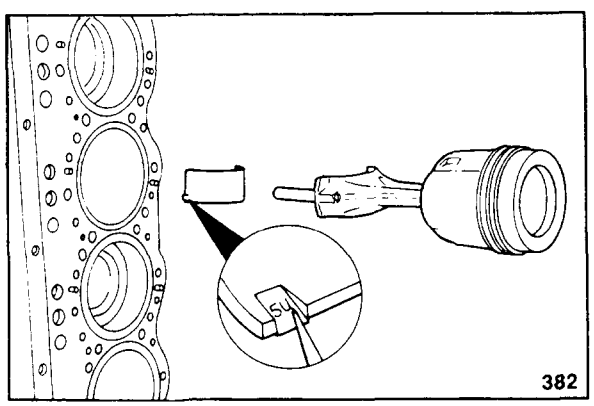


11. Install the piston and connecting rod assemblies. Refer to Procedure 07-24.

12. Install the cylinder head and related components. Refer to Procedure 07-27.

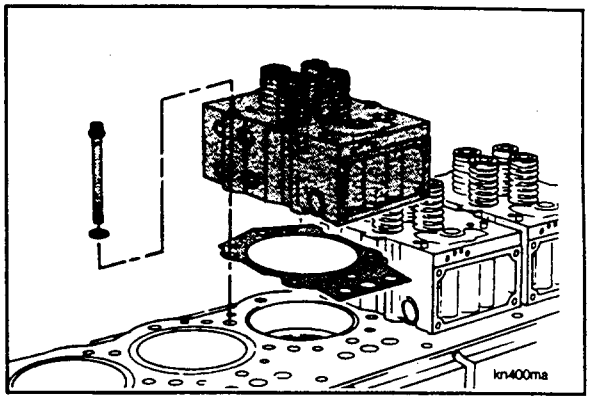


## Check Liner Protrusion (07-27)

**Caution: The clamps must touch the highest part of the liner.**

1. Use two cylinder liner clamps, Part No. 3376944 and two cylinder head capscrews. Install the clamps and capscrews. Tighten the capscrews to 65 N•m [50 ft-lb].

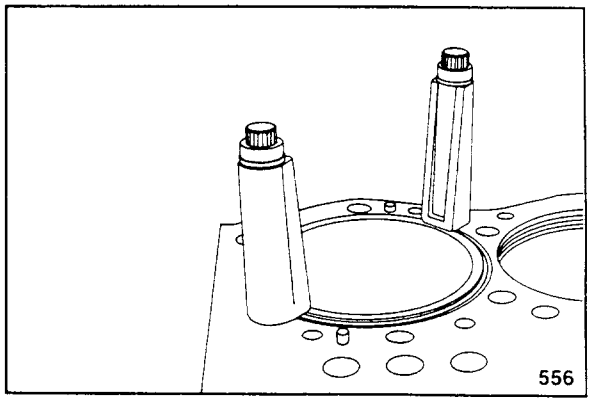


2. Use a gauge block, Part No. 3376220, or equivalent. Position the gauge block so the indicator needle will contact the liner flange on the outside of the sealing bead as shown.
3. Gently push the indicator needle down until it touches the liner. Turn the gauge until the "ZERO" is aligned with the head of the dial. Repeat this step several times to be sure the gauge is set to "ZERO".

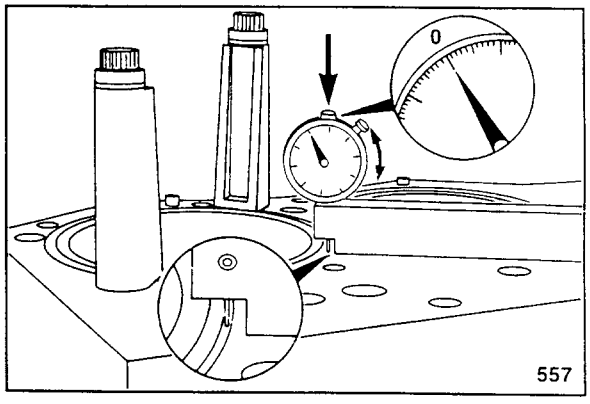


4. Raise the indicator and move the gauge block until the indicator will touch the block surface.

   Gently push the indicator down until it touches the block. Read the indicator.

| Cylinder Liner Protrusion | | |
|---|---|---|
| mm | | in |
| 0.13 | MIN | 0.005 |
| 0.18 | MAX | 0.007 |

5. Read the liner protrusion in four places equally spaced on the liner O.D. The measurements on each liner must not vary more than 0.03mm [0.001 inch].

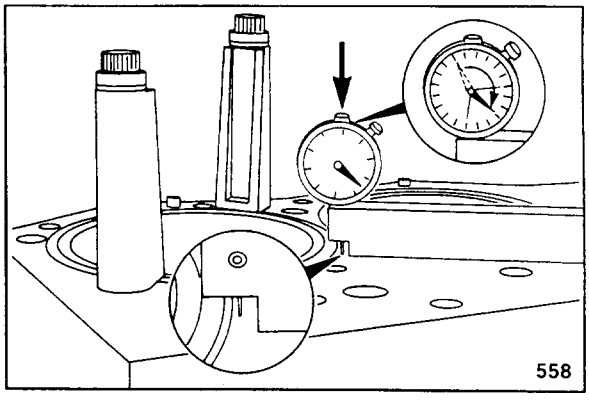

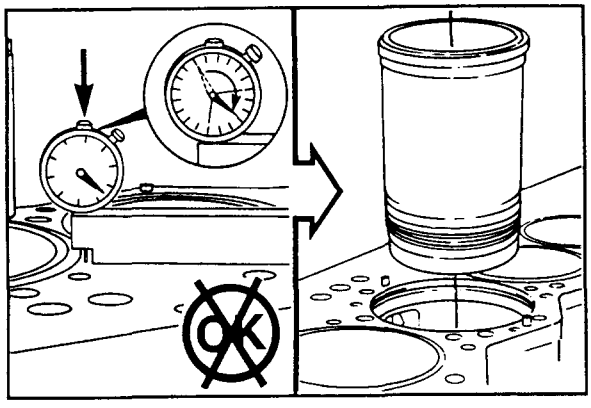

6. If the liner protrusion is not correct the liner must be removed. Refer to Procedure 07-26.

**Note:** Use shims to increase the protrusion. Machine the counterbore ledge to decrease the protrusion. Refer to the K19 Shop Manual.

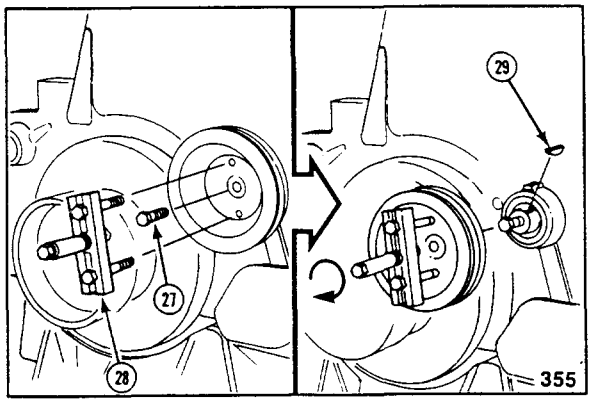


## Accessory Drive Pulley - Replace (07-28)

### Remove

**Caution: Use a capscrew in the shaft to prevent damage to the shaft threads.**

Install a 7/16-20x1 inch capscrew in the shaft.

Use a standard puller, Part No. ST-647, or equivalent (28). Remove the accessory drive pulley.

Use a brass drift and remove the woodruff key (29) from the shaft. Remove the capscrew (27) from the shaft.

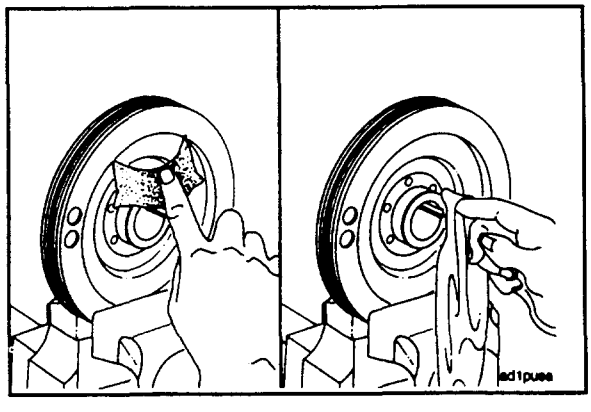


### Check For Reuse

1. Clean and check the pulley for reuse. Refer to Procedure 06-10.

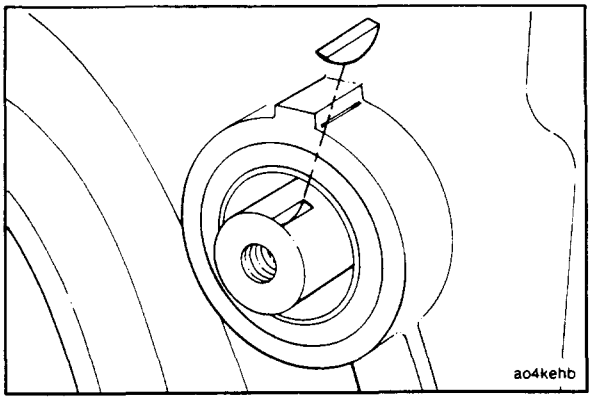


### Install

1. Install the woodruff key (5).

**Caution: Do not use a hammer to drive the pulley into position. Damage to the thrust bearing will result.**

2. Use the pulley installation tool kit, Part No. 3376326. Install the appropriate adapter (7) in the pusher.

**Note:** Do not lubricate. The lips on the seal and the seal surface on the pulley wear sleeve must be clean and dry.

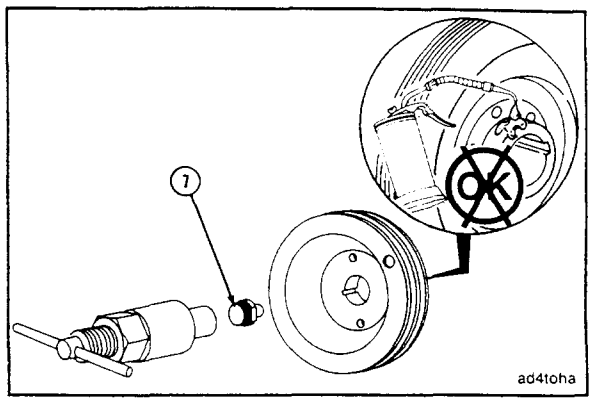


3. Lubricate the shaft O.D. and the pulley I.D. with engine oil.

**Caution: The dust lip on the accessory drive seal must not be folded under when the pulley is installed. To prevent the dust lip (yellow lip) from folding under, bend the lip outward by running your finger around it 8 to 10 times applying gentle pressure. Avoid touching the sealing lip. The dust lip will remain bent approximately one minute, then return slowly to the operating position.**

4. Align the keyway in the pulley with the key in the shaft. Use the tool to push the pulley on the shaft until it touches the step on the shaft.

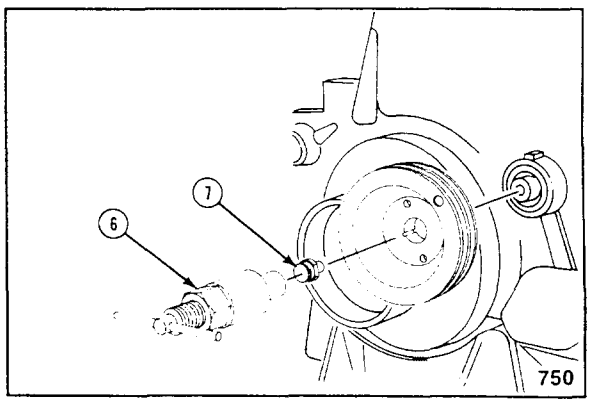


## Wear Sleeve, Accessory Drive Pulley - Replace (07-29)

### Remove

**Caution: The jaws of the vise must have copper plates to prevent damage to the pulley.**

1. Put the accessory drive pulley in a vise.

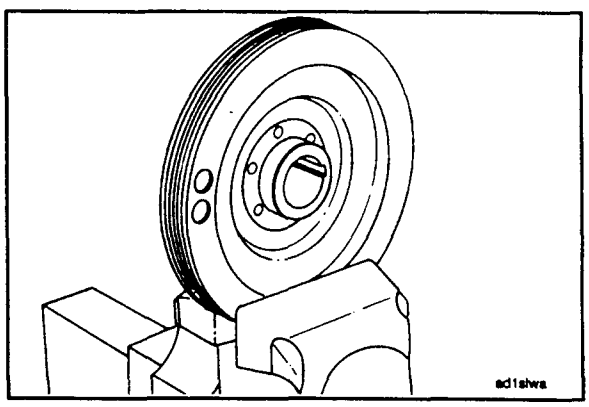


2. Grind a 1.5 mm [1/16 inch] radius on the cutting edge of a 19 mm [3/4 inch] chisel.
3. Place the chisel as shown and strike the wear sleeve in four places. This will relieve the press fit and allow the wear sleeve to be removed.

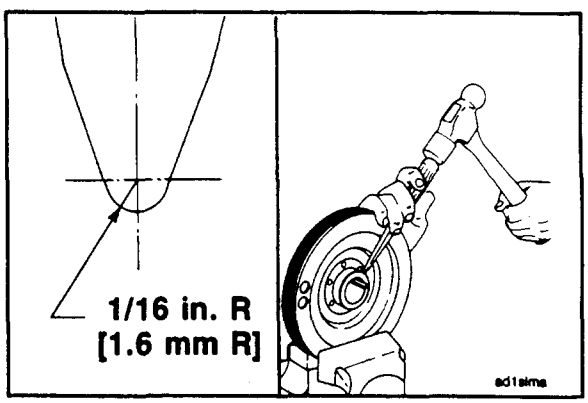

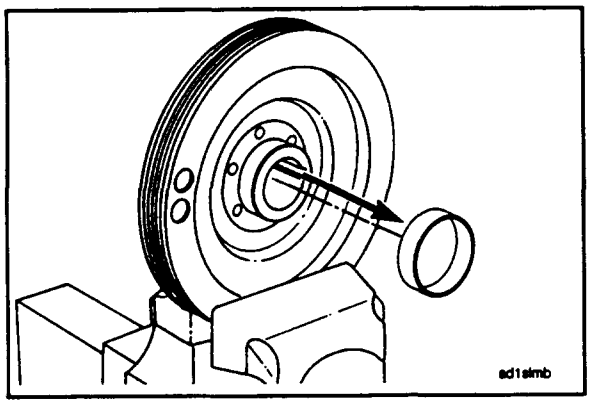


4. Remove the wear sleeve.

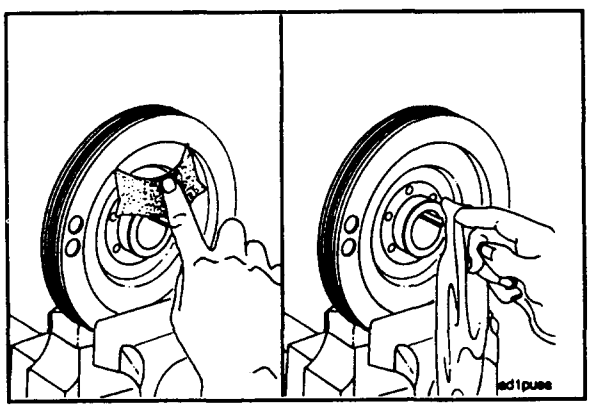


## Check For Reuse

1. Clean and check the pulley for reuse.
2. Use crocus cloth to clean the wear sleeve area of the pulley.

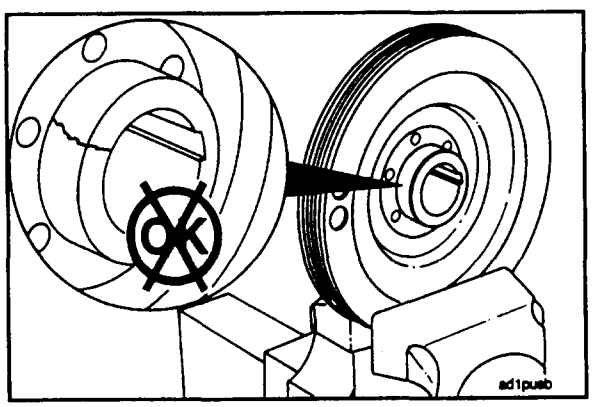


3. Inspect the sleeve wear surface for damage.

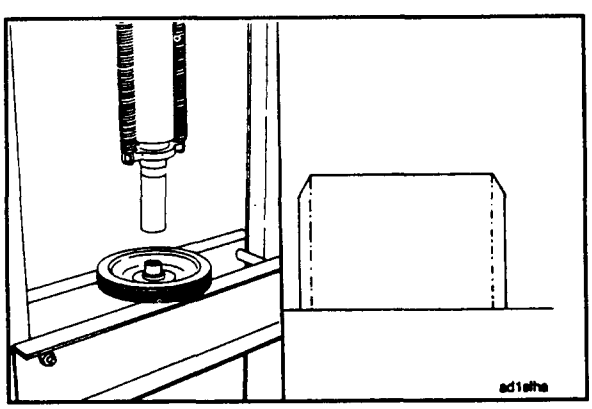


## Install

1. Support the accessory drive pulley in an arbor press.
2. Install the wear sleeve on the pulley with the chamfer on the outside diameter of the sleeve facing away from the pulley.

3. Place a flat steel plate on top of the wear sleeve. Press the sleeve on the pulley until the steel plate contacts the pulley.
4. Inspect the wear sleeve for damage or burrs.

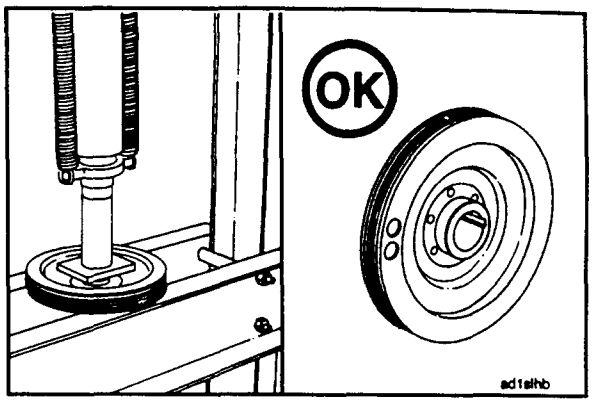


# Accessory Drive Seal - Replace (07-30)

## Remove

**Caution: Use a capscrew in the shaft to prevent damage to the shaft threads.**

1. Install a 7/16-20x1 inch capscrew in the shaft.
2. Use a standard puller, Part No. ST-647, or equivalent. Remove the accessory drive pulley.
3. Use a brass drift and remove the woodruff key (29) from the shaft. Remove the capscrew (27) from the shaft.

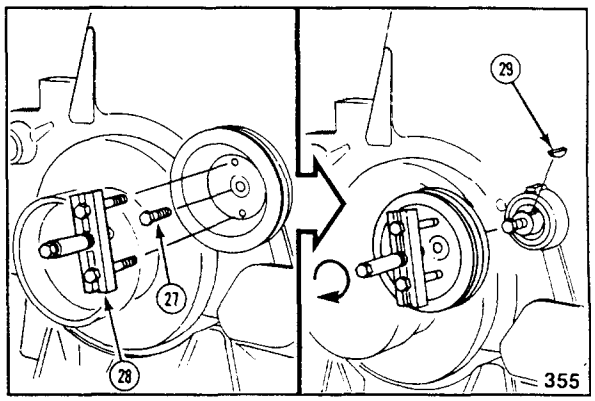


4. Remove the oil slinger (30) and the seal (31).

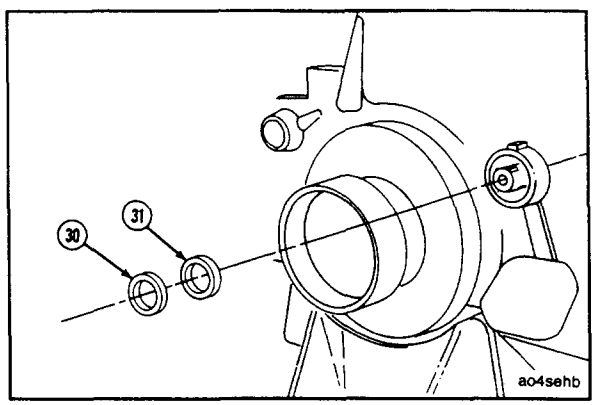


## Check For Reuse

Clean and check the pulley for reuse. Refer to Procedure 06-10.

To replace the wear sleeve refer to Procedure 07-29.

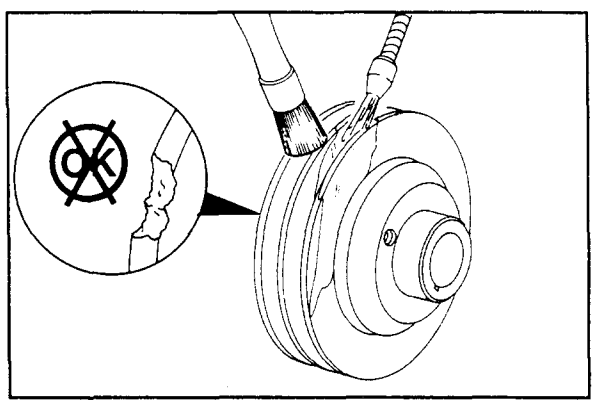

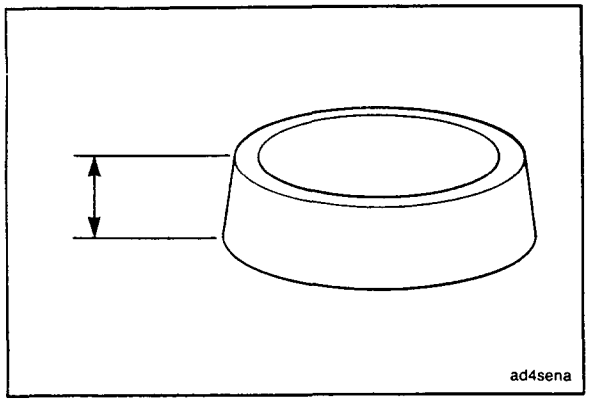


## Install

1. Measure the height of the accessory drive seal boss.

| Height of Boss: | Install Seal to: |
|---|---|
| 35 mm [1 3/8 inch] | even with the top of the boss |
| 38 mm [1 1/2 inch] | 3 mm [1/8inch] below the top of the boss |

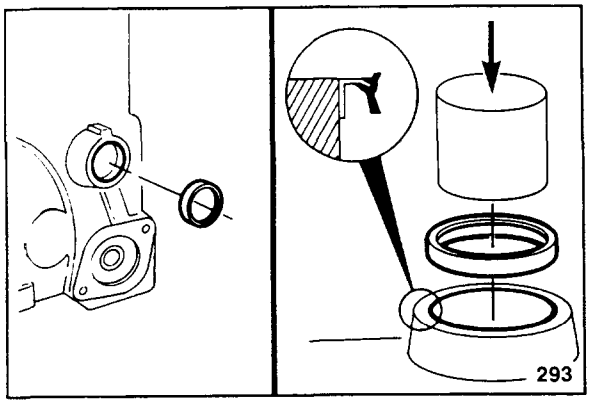


2. Use a mandrel and install the accessory drive seal. Install the oil slinger.

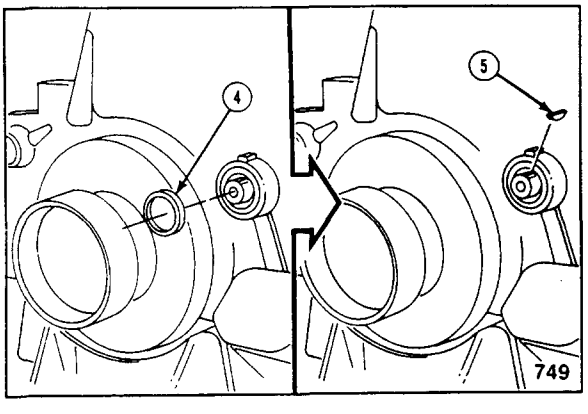


3. Install the oil slinger (4) and the accessory drive pulley alignment key (5).

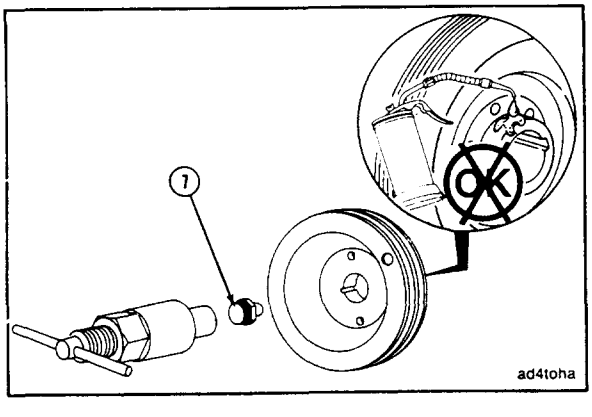


**Caution: Do not use a hammer to drive the pulley into position. Damage to the thrust bearing will result.**

4. Use the pulley installation tool kit, Part No. 3376326. Install the appropriate adapter (7) in the pusher.

**Caution: Do not lubricate. The lips on the seal and the seal surface on the pulley wear sleeve must be clean and dry.**

5. Lubricate the shaft O.D. and the pulley I.D. with engine oil.

**Caution: The dust lip on the accessory drive seal must not be folded under when the pulley is installed. To prevent the dust lip (yellow lip) from folding under, bend the lip outward by running your finger around it 8 to 10 times applying gentle pressure. Avoid touching the sealing lip. The dust lip will remain bent approximately one minute, then return slowly to the operating position.**

6. Align the keyway in the pulley with the key in the shaft. Use the tool to push the pulley on the shaft until it touches the step on the shaft.

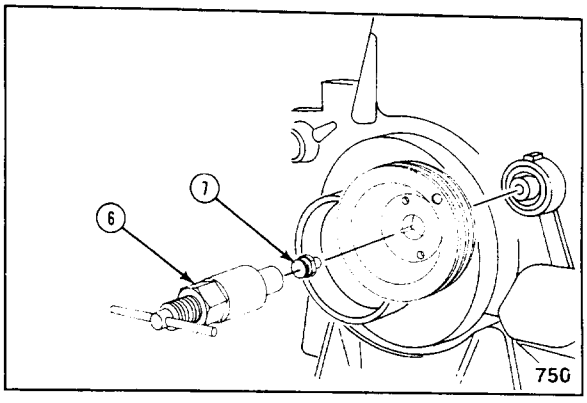


# Accessory Drive Assembly - Replace (07-31)

## Remove

**Note:** If an air compressor is not mounted on the engine, it will not be necessary to drain the cooling system.

1. Drain the cooling system. Refer to Procedure 01-06.

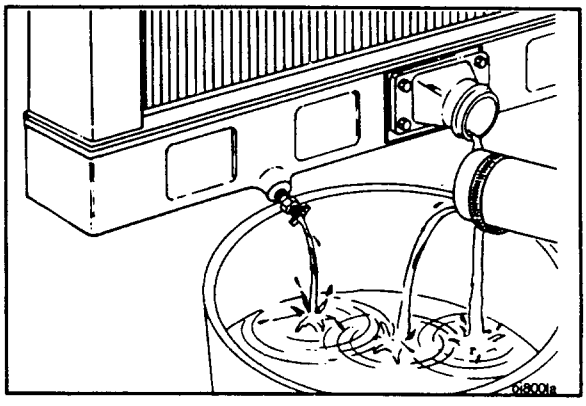

2. Remove the fuel pump. Refer to Procedure 05-11.

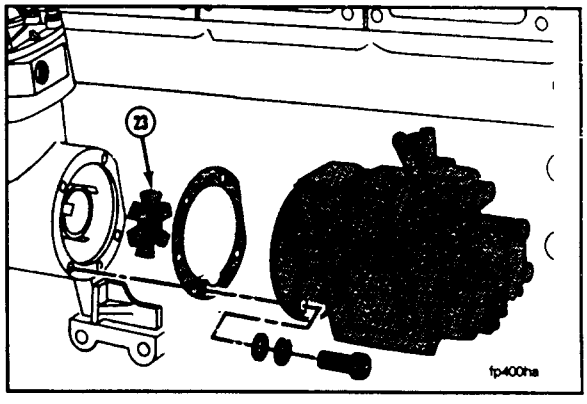


3. Remove the air compressor. Refer to Procedure 04-15 (single cylinder) or 04-16 (two cylinder).

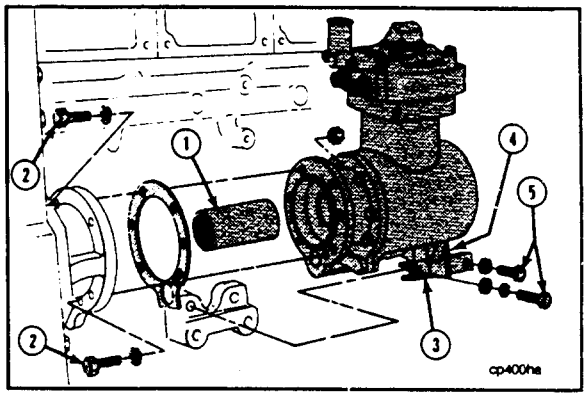

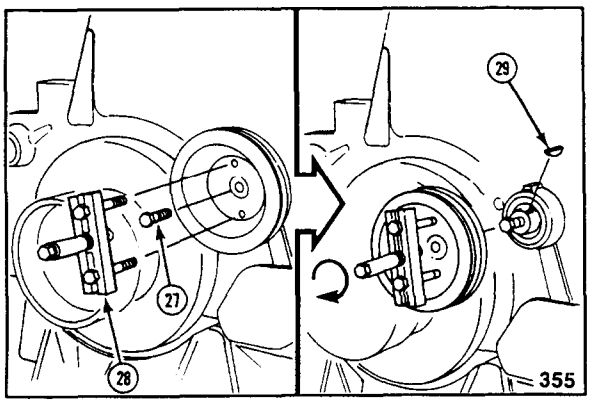


4. Remove the accessory drive pulley. Refer to Procedure 07-28.

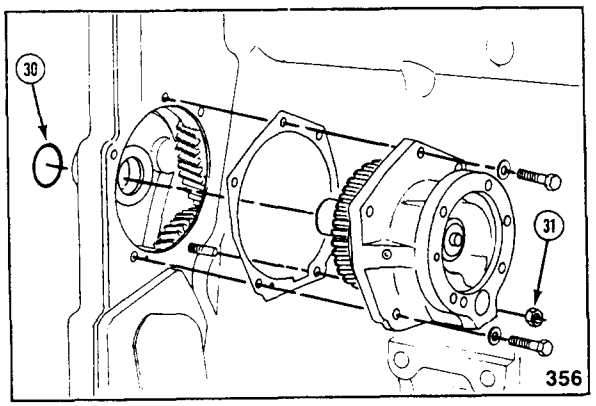


**Caution: The woodruff key must be removed before removing the accessory drive assembly. Damage to the bushing can result.**

5. Remove the four capscrews and the nut (31). Remove the accessory drive assembly.
6. Remove the oil slinger (30).

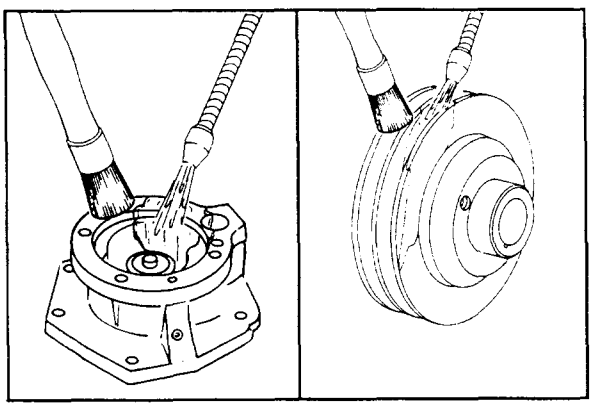

## Check For Reuse

1. Clean and check the accessory drive for reuse. Refer to Procedure 07-32.
2. Clean and check the pulley for reuse. Refer to Procedure 06-10.

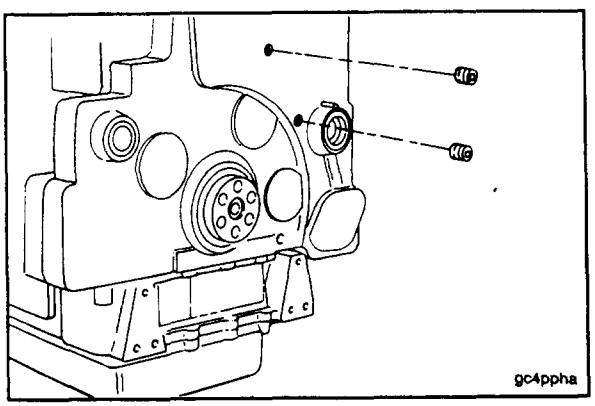


## Install

1. Remove the two pipe plugs from the timing holes in the front cover.
2. Check the index mark alignment.

**Caution: Do not use the "A" on the camshaft idler gear for the accessory drive alignment unless the "X" marks on the camshaft and the camshaft idler gears are aligned and centered in the upper timing plug hole. If the "X" marks are not visible in the upper hole, rotate the engine until the "X" mark on the camshaft gear is centered in the upper timing plug hole.**

**Note:** Install the accessory drive so that the "A" on the accessory drive gear is centered in the lower timing plug hole.

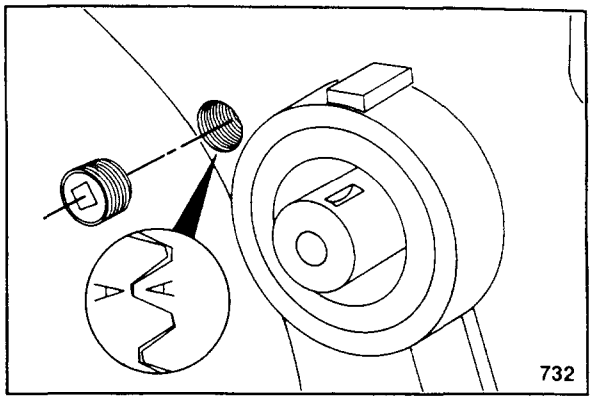


**Caution: If the accessory drive housing is aluminum, plain washers must be installed on the capscrews.**

3. Install the gasket, capscrews, and nut. Tighten the capscrews to 45 N•m [35 ft-lb].

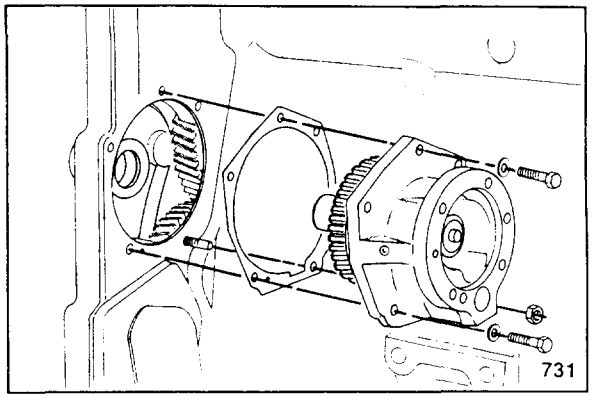


4. Use pipe sealant, Part No. 3375066, or equivalent. Apply sealant on the pipe threads. Install the plugs. Tighten the plugs to 25 N•m [20 ft-lb].

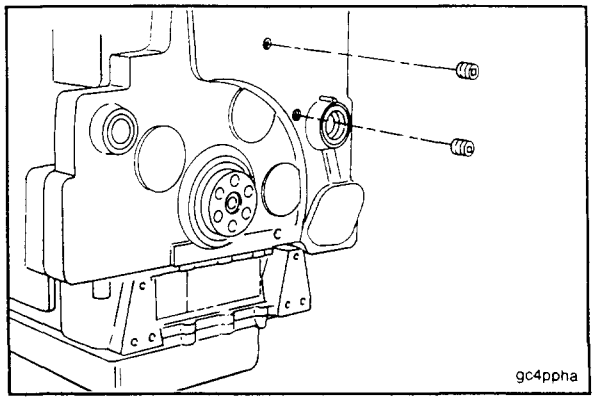


5. Install the oil slinger (4). Install the accessory drive pulley alignment key (5).

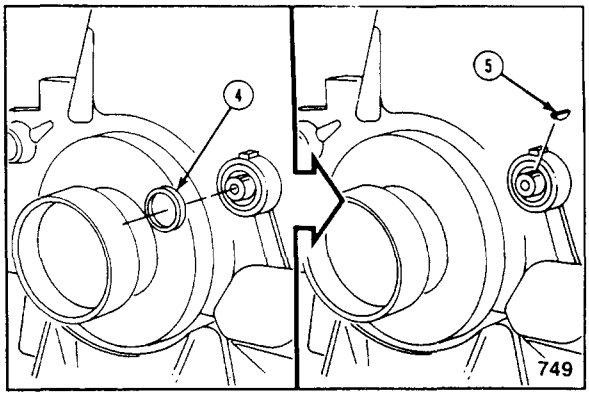

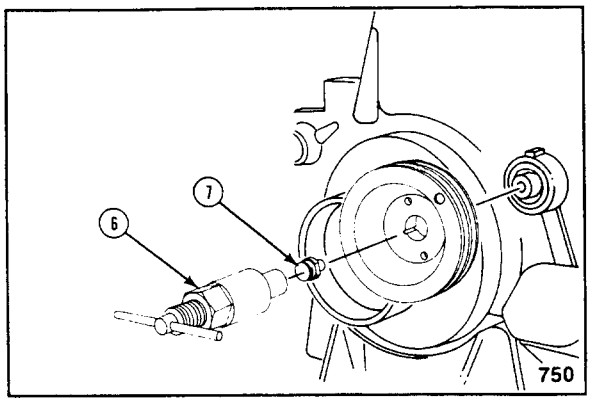


6. Install the accessory drive pulley. Refer to Procedure 07-28.

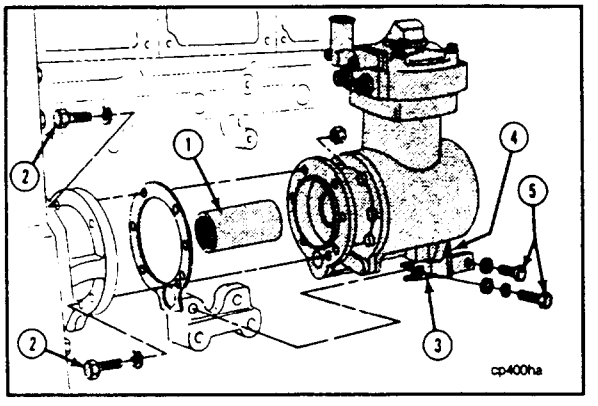


7. Install the air compressor. Refer to Procedure 04-15 (single cylinder) or 04-16 (two cylinder).

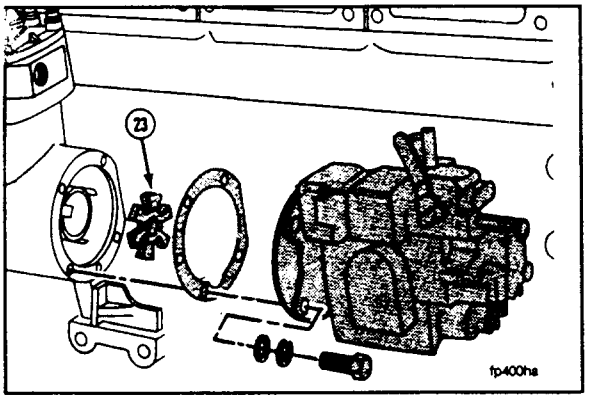


8. Install the fuel pump and related components. Refer to Procedure 05-11.

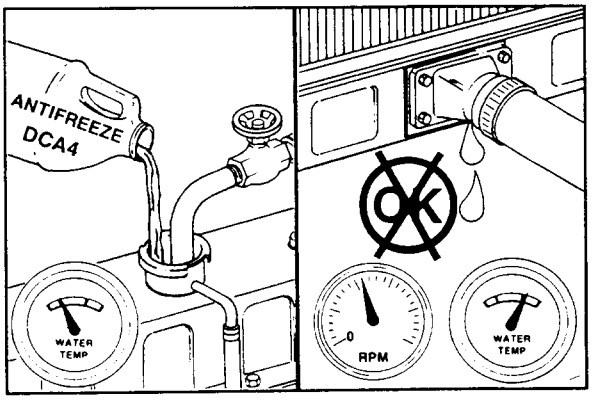


9. Fill the cooling system. Refer to Procedure 01-07.
10. Operate the engine to 70°C [160°F] coolant temperature and check for leaks.

# Fuel Pump/Compressor Drive - Clean And Check For Reuse (07-32)

1. Clean and check the accessory for reuse. Check the end clearance.

| End Clearance | | |
|---|---|---|
| mm | | in |
| 0.05 | MIN | 0.002 |
| 0.30 | MAX | 0.012 |

Check the gear teeth for damage.

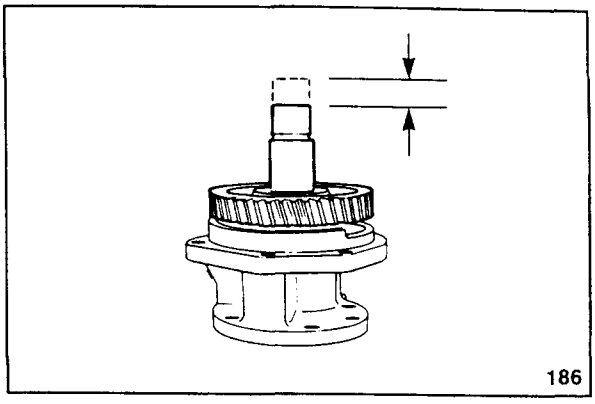
186

Check the coupling washer, it must be positioned tightly between the coupling and the shaft. If the washer is not tight, the drive must be replaced or rebuilt. Refer to the K19 Shop Manual.

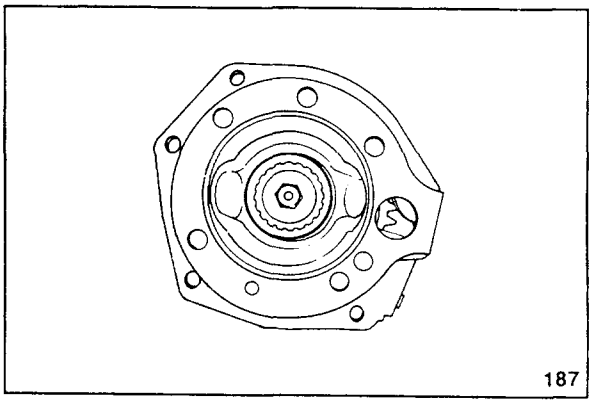
187

# Vibration Damper - Replace (07-33)

## Remove

1. Remove the fan belt. Refer to Procedure 01-23.

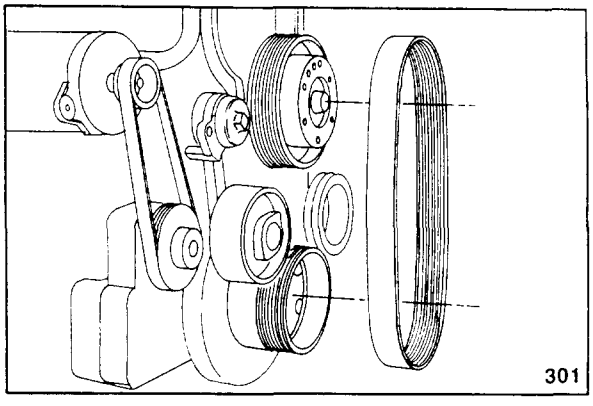
301

**Caution: This assembly weighs more than 23 kg. [50 lb]. Personal injury can result.**

2. Remove one capscrew and install a 3/4-16x5 inch guide stud (32).

**Caution: Do not pry or hammer on the vibration damper. Damage will result.**

3. Remove the remaining capscrews, damper and pulley. Remove the guide stud (32).

**Note:** Engines that do not have a belt driven fan hub have an adapter instead of the pulley.

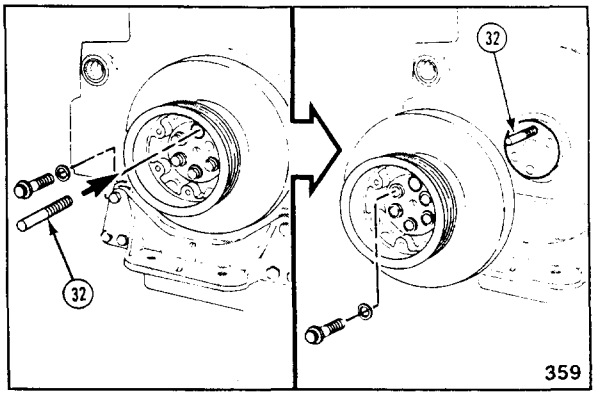

359

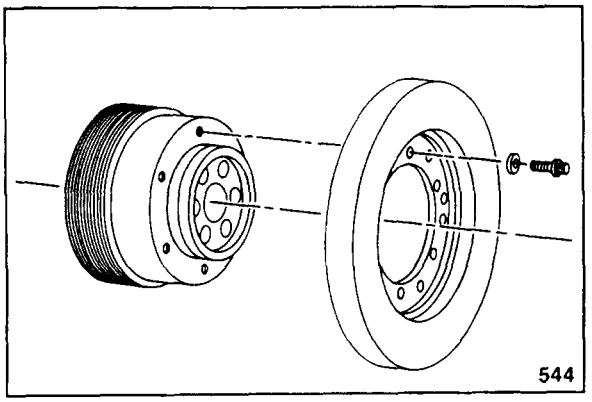


4. Remove the pulley from the damper.

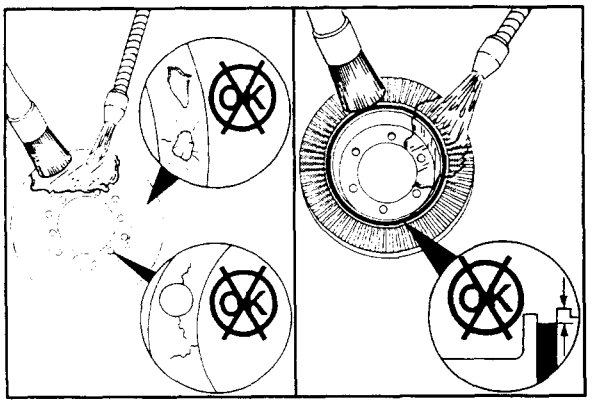

## Check For Reuse

1. Clean and check the viscous damper for reuse. Refer to Procedure 07-34.
2. Clean and check the rubber damper for reuse. Refer to Procedure 07-35.

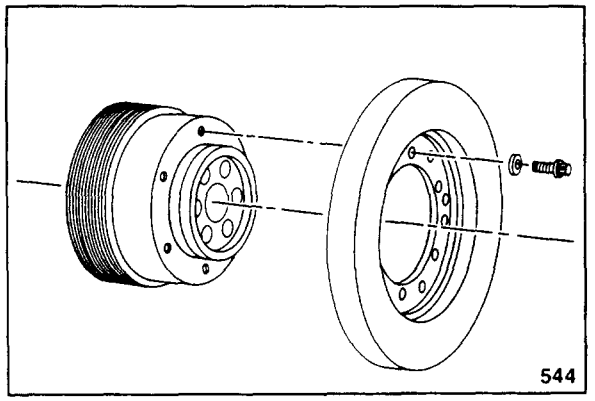


## Install

**Note:** A rubber damper does not require a crankshaft adapter.

1. Install the vibration damper on the crankshaft pulley or adapter. Install the six washers and capscrews. Tighten the capscrews to 140 N•m [105 ft-lb].

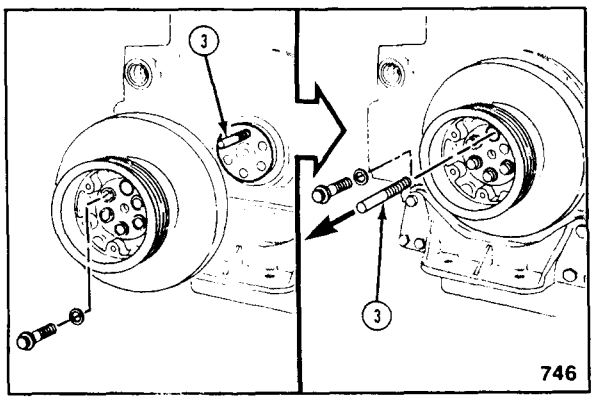


2. Install the guide stud (3) in the crankshaft.
3. Install the damper assembly. The pilot must be aligned with the crankshaft correctly. Install the washers and capscrews. Tighten the capscrews to the values indicated below.

**Capscrew Torque Values**

| N•m | Step | ft-lb |
|---|---|---|
| 230 | 1 | 170 |
| 445 | 2 | 330 |

## Measure Vibration Damper Eccentricity

**Note:** When adjusting the indicator on a rubber member damper, the indicator tip must touch a machined surface. The indicator stem must not fall into a balance hole.

1. Use a dial indicator and adjust it as shown to measure radial alignment of the vibration damper. Turn the crankshaft 360 degrees and record the TIR.

| Maximum Eccentricity | | |
|---|---|---|
| mm | | in |
| 1.40 | Rubber damper | 0.055 |
| 1.02 | Viscous damper | 0.040 |

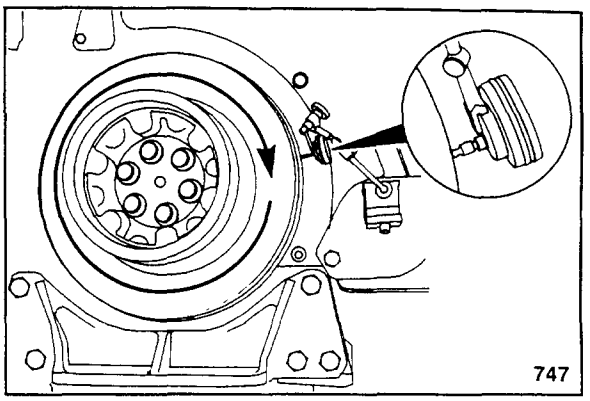


If the measurement is not within specifications, be sure the damper pilot is aligned correctly.

## Measure Vibration Damper Wobble

**Note:** The crankshaft end clearance must be pushed or pulled in the same direction each time a measurement is taken.

**Note:** When adjusting the indicator on a rubber member damper, the indicator tip must touch a machined surface.

1. Put the indicator 13 mm [1/2 inch] from the O.D. to measure the damper wobble. Turn the crankshaft 360 degrees and record the TIR.

| Maximum Wobble | | |
|---|---|---|
| mm | | in |
| 1.02 | Rubber damper | 0.040 |
| 1.02 | viscous damper | 0.040 |

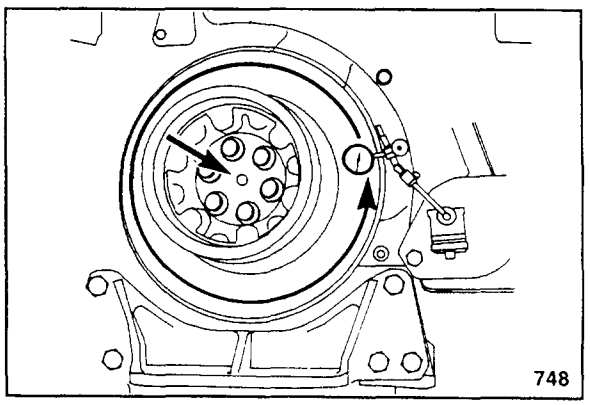


**Note:** When the dial indicator is positioned more than 13 mm [1/2 inch] from the O.D., the specification is different.

To determine the specification,

- measure the distance from the center of the crankshaft to the point the indicator tip touches the damper,
- multiply the distance by 0.18 mm [0.007 inch] when the damper is rubber; 0.15 mm [0.006 inch] when the damper is viscous, to obtain the maximum TIR.

If the measurement is not within specification, check for foreign material between the crankshaft and the adapter (or pulley), and between the adapter (or pulley) and the damper.

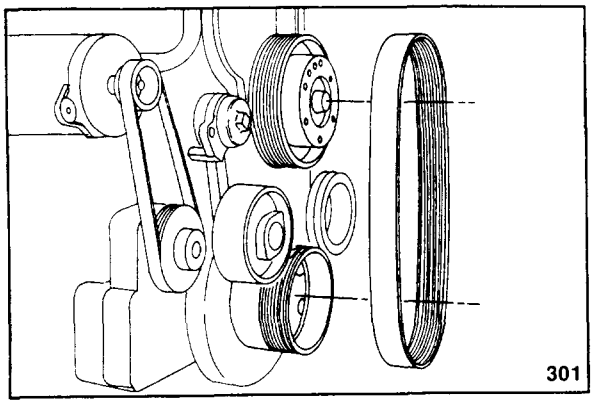


2. Install the fan belt and related components. Refer to Procedure 01-23.

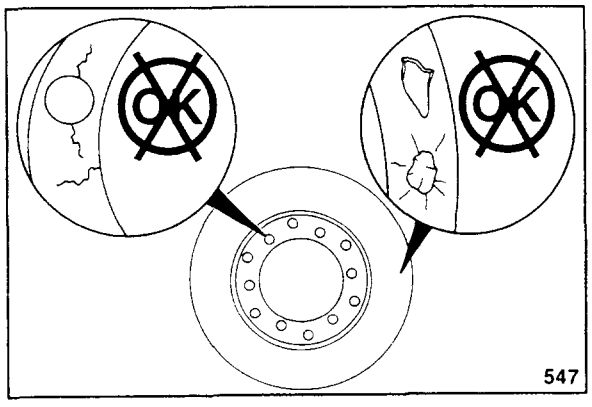


## Viscous Vibration Damper - Clean And Check For Reuse (07-34)

**Note:** Vibration dampers have a limited service life. The damper must be replaced after 576,000 km, [360,000 miles], or 15,000 hours of service.

**Note:** Do not repair or balance a viscous damper in the field.

1. Clean and check the damper for reuse. Check for cracks on the mounting flange. Check for dents or bulges on the housing.

   If the damper is damaged, it must be replaced.

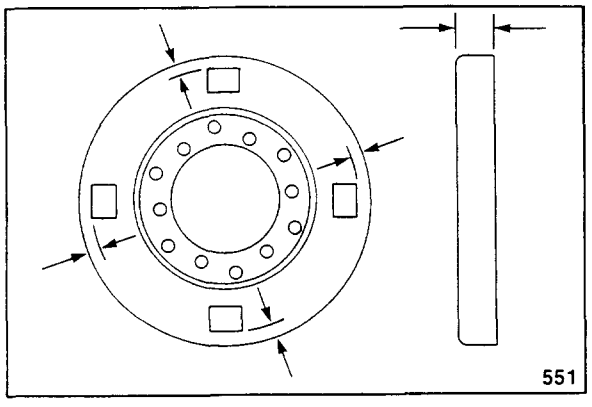


2. Use a paint solvent and fine crocus cloth. Remove the paint from the front and back of the housing at the four areas shown.
3. Measure no less than 3 mm [1/8 inch] from the O.D. to be sure that the measurement is on a flat surface.

   Measure the thickness at four places. If the measurements vary more than 0.25 mm [0.010 inch], or if the thickness exceeds 42.24 mm [1.663 inch], the damper must be replaced.

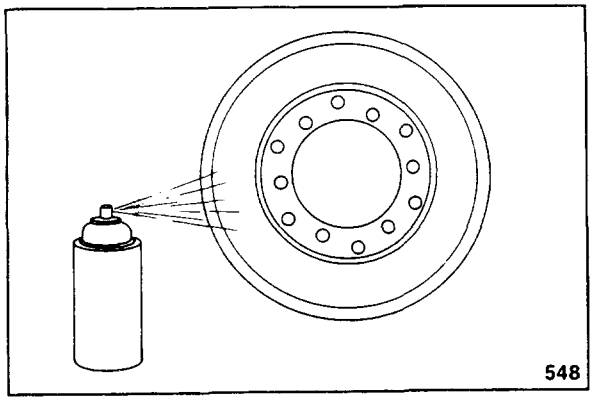


**Note:** The next three steps illustrate the procedure to check the damper for fluid leakage.

Step One: Use the crack detection kit, Part No. 3375434, or equivalent and spray the rolled lip of the damper.

**Note:** The crack detection kit, Part No. 3375434, contains the necessary cleaner, penetrant, and developer to check for cracks using the dye penetrant method.

**Caution: Wear protective clothing to prevent personal injury from burns.**

Step Two: Use an oven with the temperature adjusted to 93°C [200°F].

Place the damper in the oven with the rolled lip down. Heat the damper for two hours.

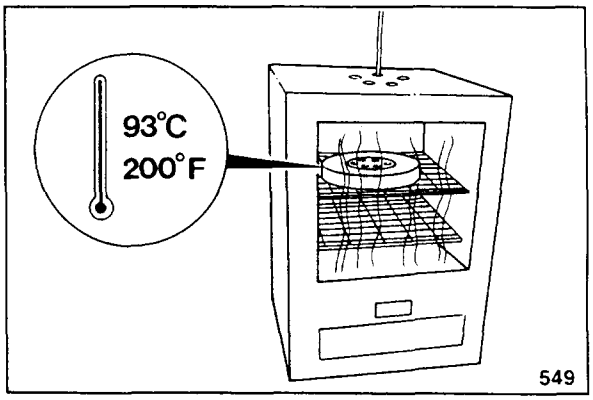


**Caution: Wear protective clothing to prevent personal injury from burns.**

Step Three: Remove the damper and check for leakage around the lip. If there is any leakage the damper must be replaced.

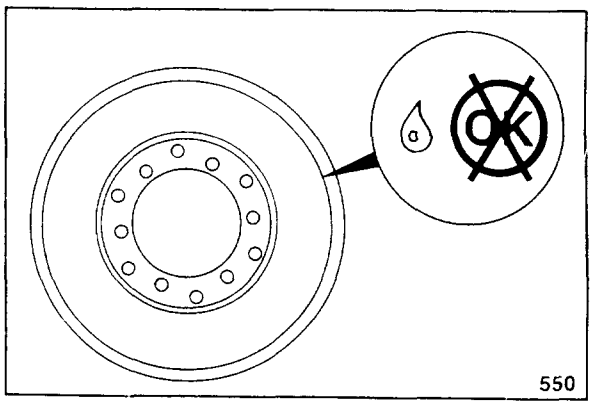


## Rubber Vibration Damper - Clean And Check For Reuse (07-35)

**Note:** Vibration dampers have a limited service life. The damper must be replaced after 576,000 km, [360,000 miles], or 15,000 hours of service.

1. Clean the exterior of the damper with soap and water.
2. Check for cracks on the mounting flange. Check the rubber portion of the damper for damage. If the rubber is more than 3 mm [1/8 inch] below the cast iron surface, the damper must be replaced.

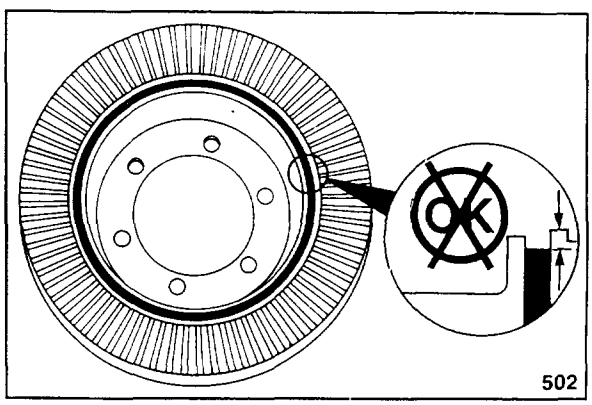


3. Check the alignment of the index marks on the hub and the inertia member. If the marks are more than 1.5 mm [1/16 inch] out of alignment, the damper must be replaced.

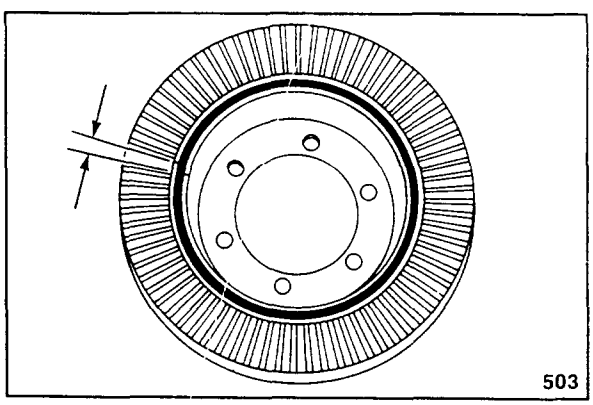

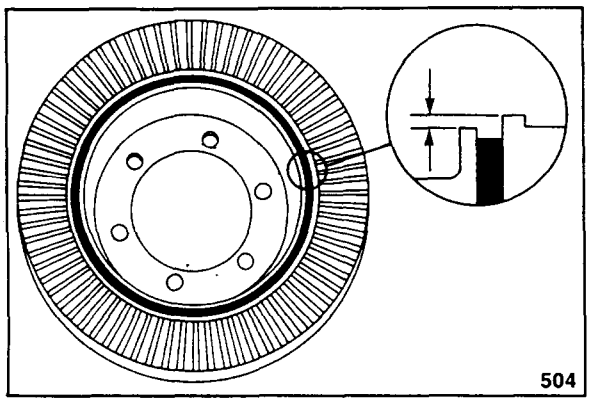


**Caution: Do not try to press the parts into alignment as the parts may separate and cause personal injury.**

4. Check the alignment of the hub and the inertia member. If the difference in alignment is more than 1.27 mm [0.050 inch], the damper must be replaced.

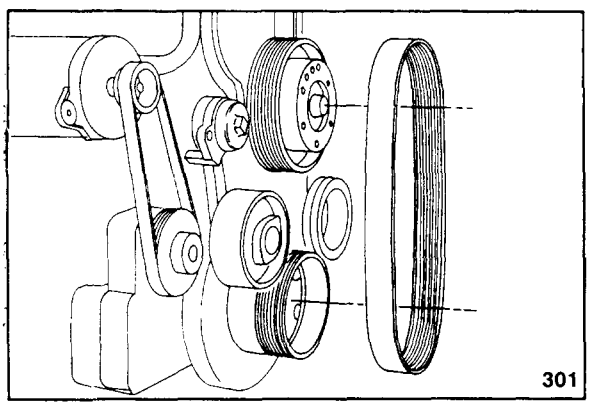


# Crankshaft Front Seal - Replace (07-36)

## Remove

1. Remove the fan belt. Refer to Procedure 01-23.

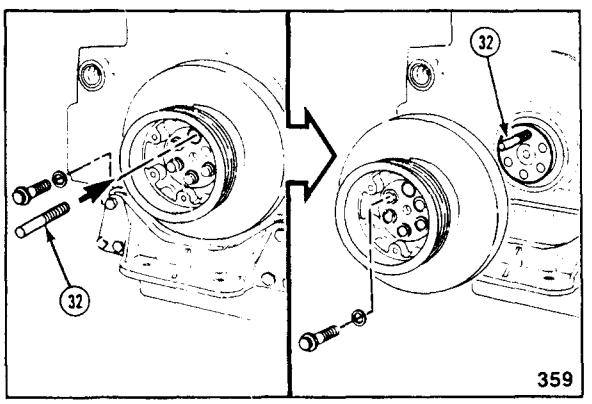


2. Remove the vibration damper and fan drive pulley. Refer to Procedure 07-33.

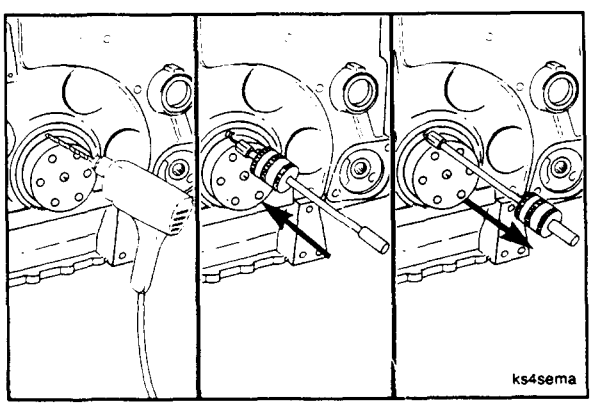


3. Use a drill, a sheet metal screw, and the following parts from the light duty puller kit, Part No. 3375784.
   - Slide hammer
   - Hook

Drill a hole in the seal and insert the sheet metal screw. Use the hook and slide hammer to remove the seal.

4. Remove the seal from the front cover.

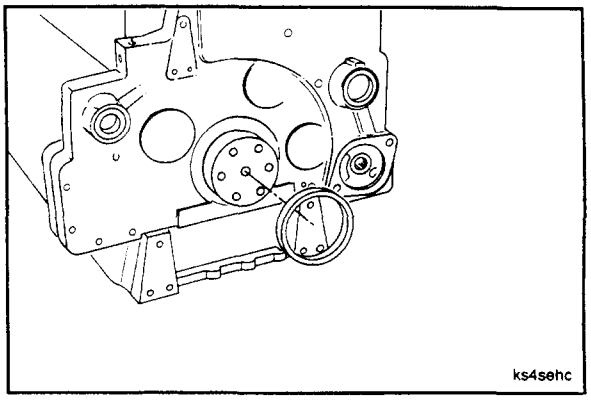


## Check For Reuse

1. Check for damage on the crankshaft seal area. If the crankshaft is grooved, install a repair sleeve. Refer to the Alternative Repair Manual.

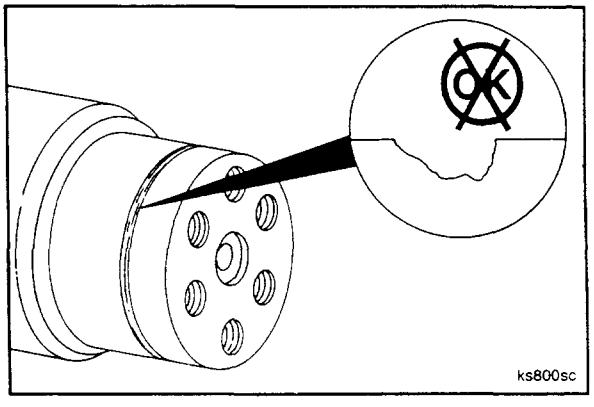


## Install

**Caution: If you have an oil seal remover/installer, Part No. ST-1311, that was purchased before 1981, it must be modified to prevent damage to the front crankshaft seal dust lip.**

Dimension A: 113.28 mm 4.460 inch

Dimension B: 7.62 mm 0.300 inch

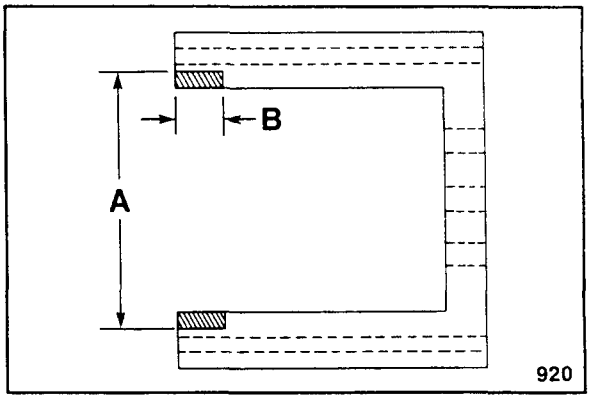

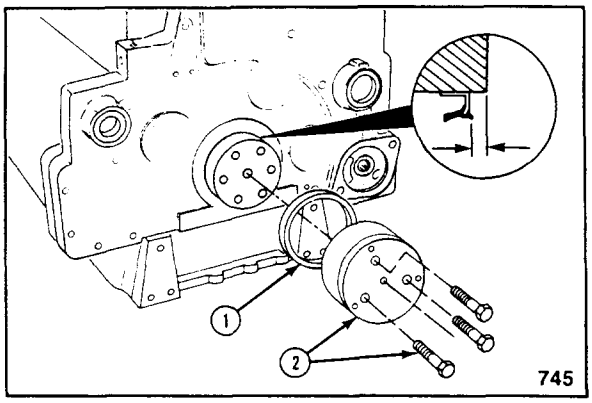


**Note:** Do not lubricate. The lips on the seal (1) and the seal surface of the crankshaft must be clean and dry.

Use the installation sleeve that is included with the seal. Position the sleeve on the crankshaft. Push the seal (1) over the sleeve on the crankshaft. Push the seal until it touches the front cover.

**Caution: Do not use a hammer to drive the tool. Damage to the threads will result. The tool can bind to the crankshaft because of the narrow tolerances.**

Use the oil seal remover/installer, Part No. ST-1311 (2), or equivalent. Install the tool on the crankshaft.

Use three 3/4-16 x 2 inch capscrews. Install the capscrews through the tool into the crankshaft. Tighten the capscrews alternately and evenly until the tool bottoms on the crankshaft.

Remove the tool.

Both lips must clear the step and any repair sleeve. The seal will be approximately 3.56 mm [0.140 inch] below the surface of the gear cover.

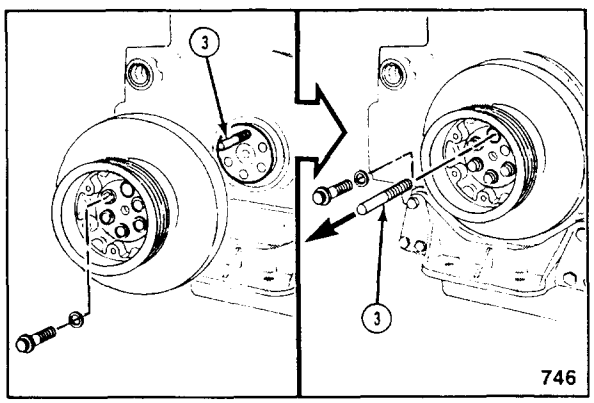


Install the vibration damper and fan drive pulley. Refer to Procedure 07-33.

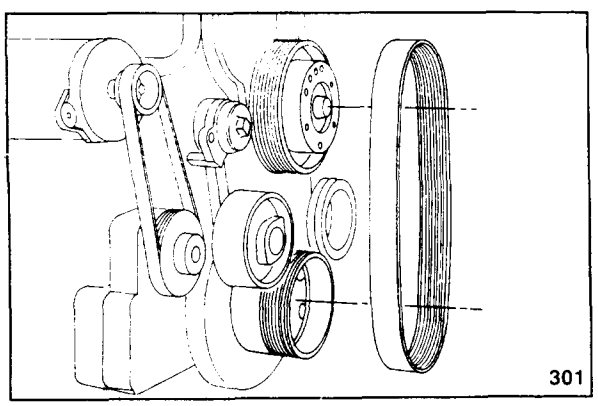


Install the fan belt. Refer to Procedure 01-23.

# Water Pump Drive - Replace (07-37)

## Remove

1. Remove the water pump. Refer to Procedure 01-30.

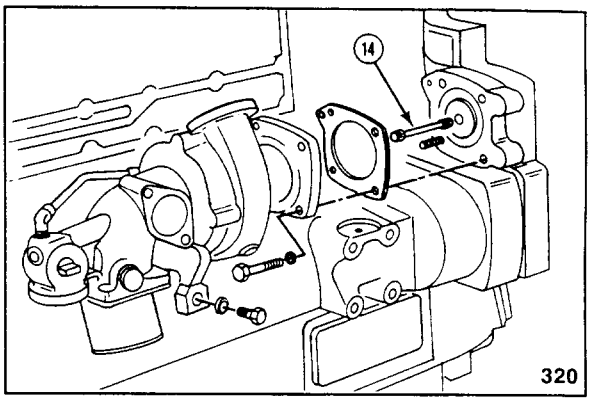


2. Loosen the adjusting link and the alternator mounting capscrews.

**Caution: The lower jam nut is a left-hand thread.**

3. Loosen both of the jam nuts. Turn the adjusting screw to relieve the belt tension. Remove the alternator belt.

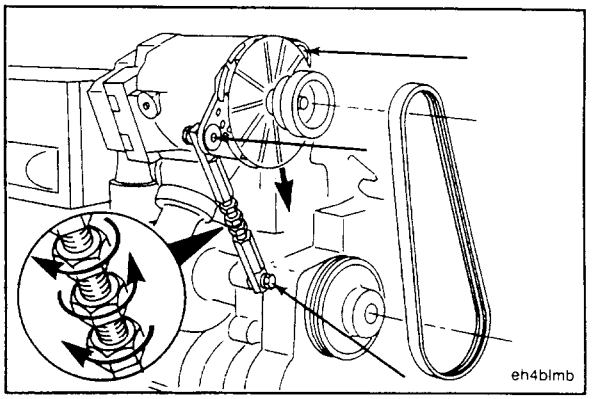


4. Remove the plastic plug from the end of the shaft.
5. Install the adapter, Part No. 3376089, in the shaft to prevent damage. The adapter is included with the pulley installation tool, Part No. 3376326.

**Note:** If the adapter is not available, a 3/4-16 inch capscrew with a head ground smaller than the pulley I.D. can be used.

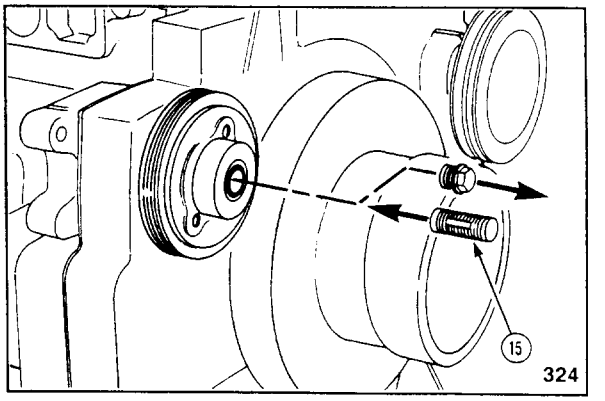


6. Put the puller on the pulley. Remove the pulley. Remove the adapter.

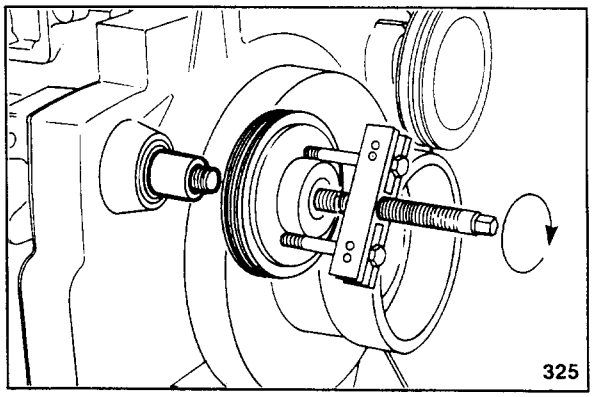

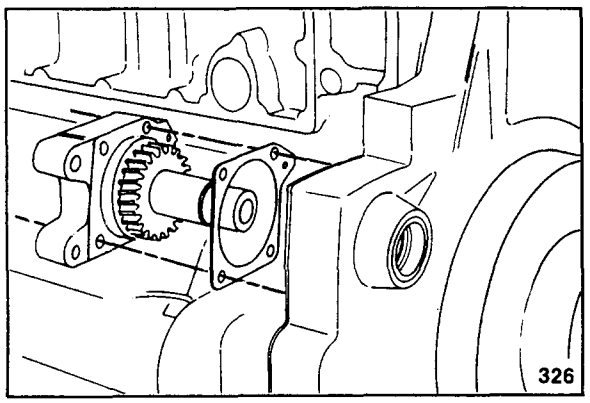


7. Remove the water pump drive assembly. Remove and discard the gasket.

**Note:** If necessary, tap on the end of the shaft with a mallet.

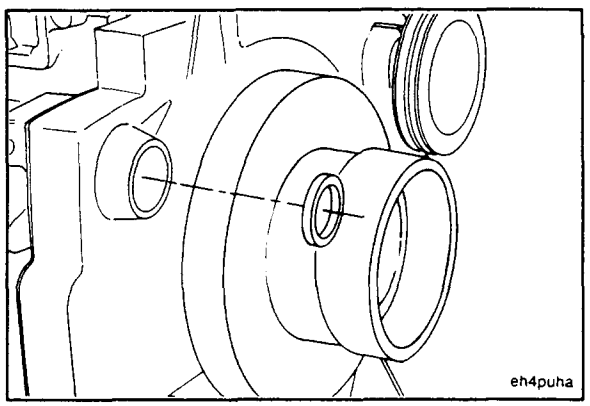


8. Remove the alternator drive oil seal.

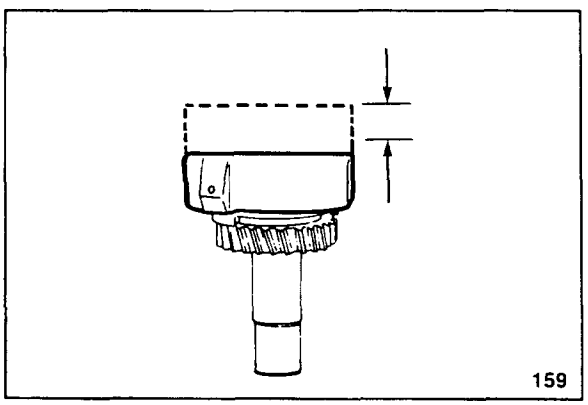


## Check For Reuse

1. Measure the water pump drive end clearance.

| Water Pump Drive End Clearance | | |
|---|---|---|
| mm | | in |
| 0.23 | MIN | 0.009 |
| 0.33 | MAX | 0.013 |

If the end clearance is not within specifications, replace or rebuild the assembly. Refer to the K19 Shop Manual.

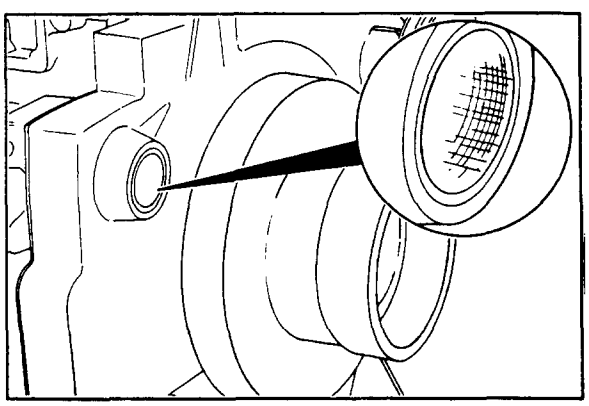

2. Check the water pump drive bushing in the front cover for excessive wear or damage. Refer to the K19 Shop Manual.

3. Check the alternator drive pulley for reuse. Refer to Procedure 06-10.
4. Check the water pump for reuse. Refer to Procedure 01-31.

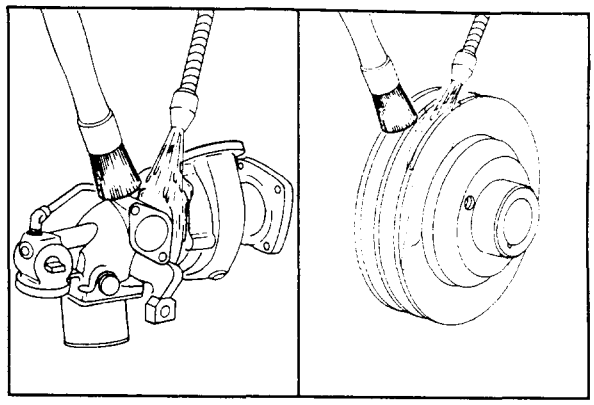

## Install

1. Install the gasket. Install the water pump drive.

   The drive will be held in position by the stud.

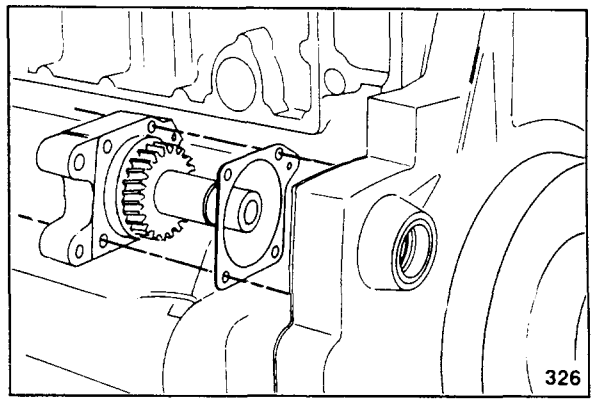


2. Install a capscrew in the water pump drive. The drive must not move during seal installation.

**Note:** Do not lubricate. The seal and the surface of the shaft must be clean and dry.

3. Use the installation sleeve that is provided with the seal. Position the seal and sleeve over the shaft. Push the seal on the step in the shaft. Remove the sleeve.

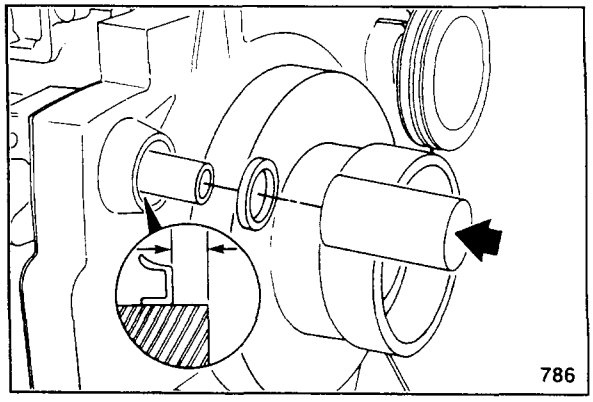


4. Use a mandrel. Push the seal into the bore until it is 3.18 mm [0.125 inch] below the surface of the gear cover.

**Caution: Do not use a hammer to drive the pulley into position. The thrust washers will be damaged.**

5. Use the pulley installation kit, Part No. 3376326, or equivalent. Install the correct adapter (2) in the pusher (1).
6. Install the pulley on the shaft. The pulley MUST touch the step on the shaft. Remove the tool and adapter.

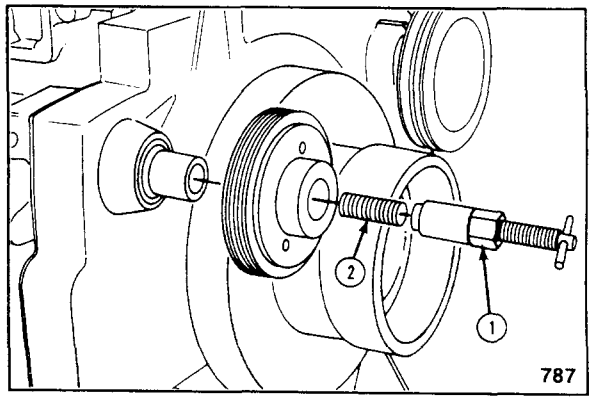

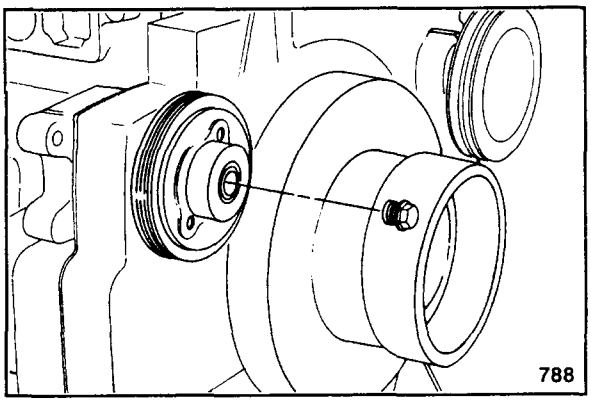


7. Install the plastic plug that protects the threads.
8. Remove the capscrew from the water pump drive.

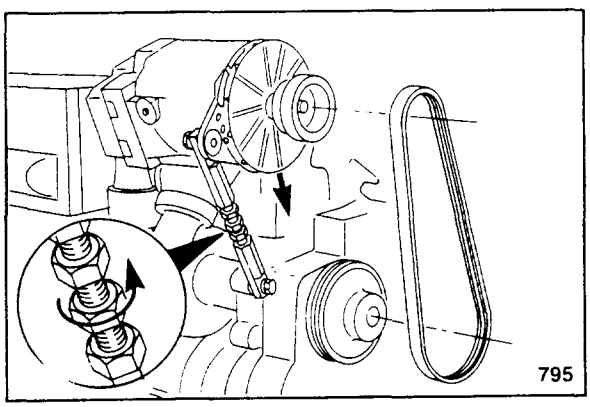


9. Install the alternator belt. Refer to Procedure 06-07.

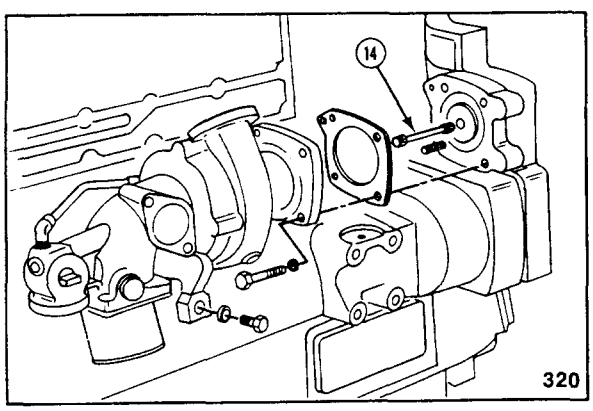


10. Install the water pump and related parts. Refer to Procedure 01-30.

# Water Pump Drive - Clean And Check For Reuse (07-38)

Measure the clearance. If the clearance is not within specifications, check the retainer for correct assembly. The retainer MUST be positioned tightly against the shoulder of the shaft.

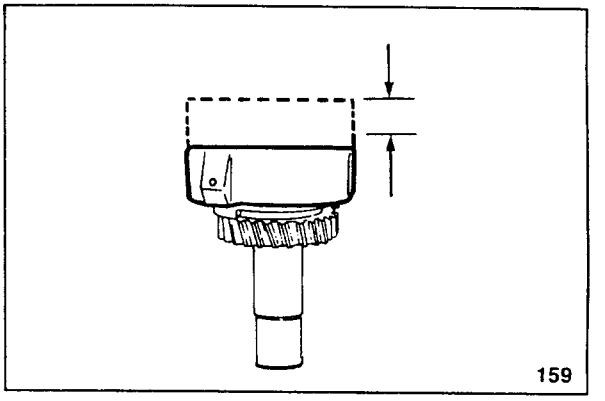


| Water Pump Drive End Clearance | | |
|---|---|---|
| mm | | in |
| 0.23 | MIN | 0.009 |
| 0.33 | MAX | 0.013 |

If the end clearance is not within specifications, rebuild the assembly. Refer to the K19 Shop Manual.

**Note:** Oversize thrust bearings are available to adjust the end clearance.

# Gear Cover (One Piece) - Replace (07-39)

## Remove

**Note:** For instructions to replace the two piece design gear cover refer to procedure 07-42.

1. Disconnect the batteries and starter air to prevent accidental starting.

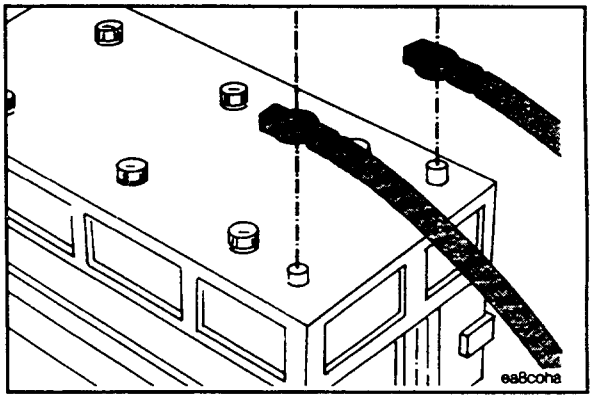


2. Open the draincock in the radiator bottom tank. Remove the lower radiator hose if necessary. Drain the cooling system.

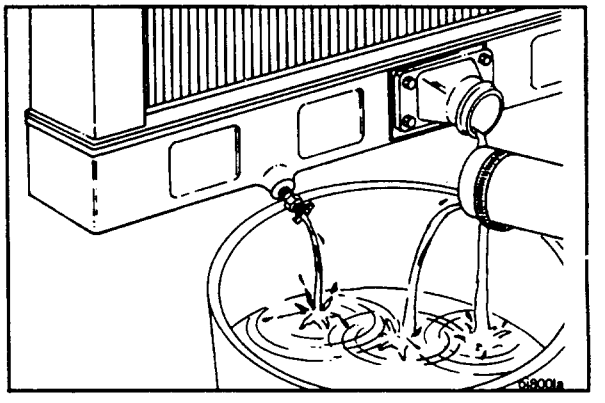

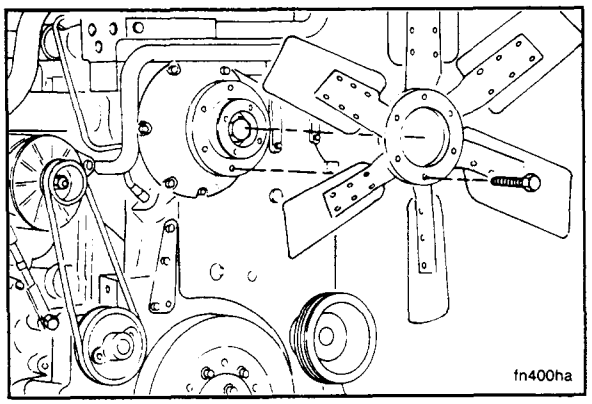


3. Remove the fan. Refer to Procedure 01-22.

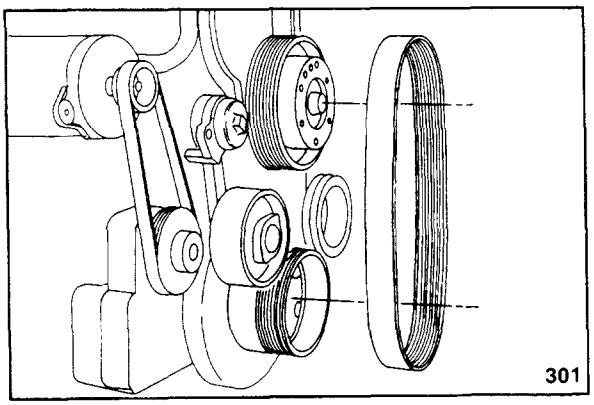


4. Remove the fan belt. Refer to Procedure 01-23.

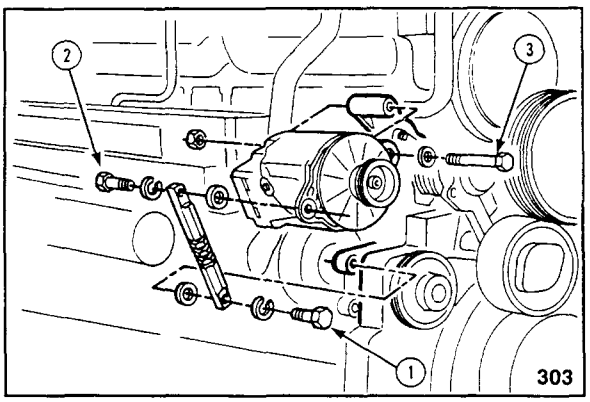


5. Remove the alternator belt and alternator. Refer to Procedure 06-09.

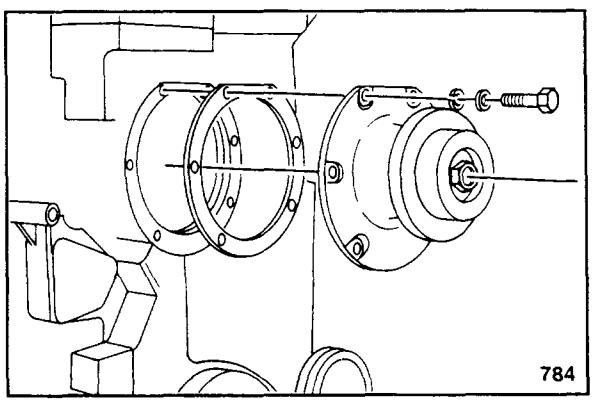


**Caution: This assembly weighs more than 23 kg [50 lbs]. Handle securely to avoid dropping.**

6. To remove the gear driven fan hub, remove the seven capscrews.

**Note:** Two of the capscrews contain a nut on the back of the gear cover clamping plate.

Remove the fan hub. Remove and discard the gasket.

**Caution: This assembly weighs more than 23 kg [50 lbs.]. Handle securely to avoid dropping.**

7. To remove the belt driven fan hub, remove the seven nuts.

   Remove the o-ring (4) and the seal (5). Discard the o-ring and the seal.

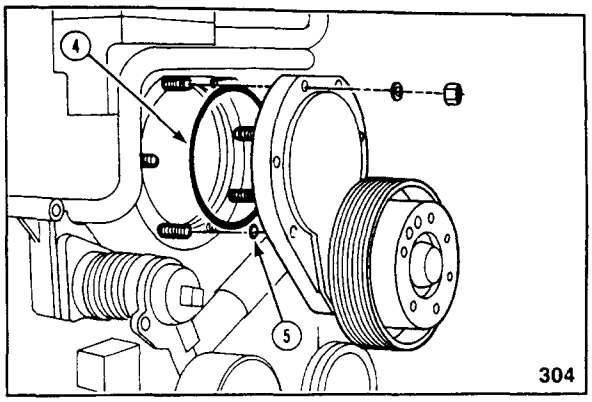


**Caution: This assembly weighs more than 23 kg [50 lbs.]. The shock absorber and the pivot arm assembly will rotate during removal. Handle securely to avoid dropping.**

8. Remove the capscrew and spacer from the shock absorber. Remove the three capscrews from the pivot arm assembly.

   Remove the pivot arm and the shock absorber as an assembly.

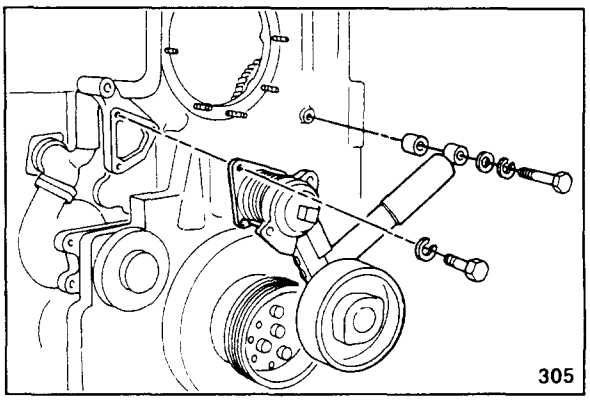


9. Remove the water pump. Refer to Procedure 01-30.

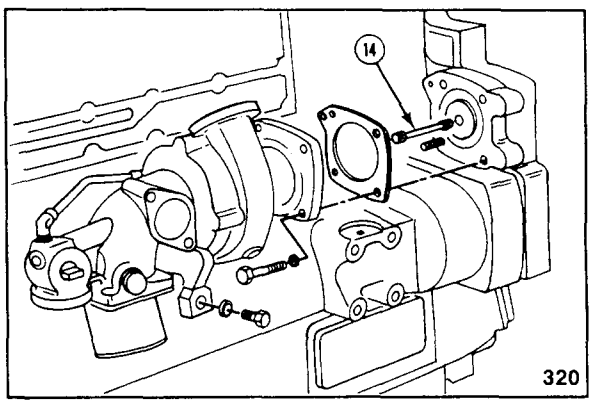


10. Remove the aftercooler water tubes as shown.
    a. Coolant deaeration tube
    b. Aftercooler water outlet tube
    c. Aftercooler hose

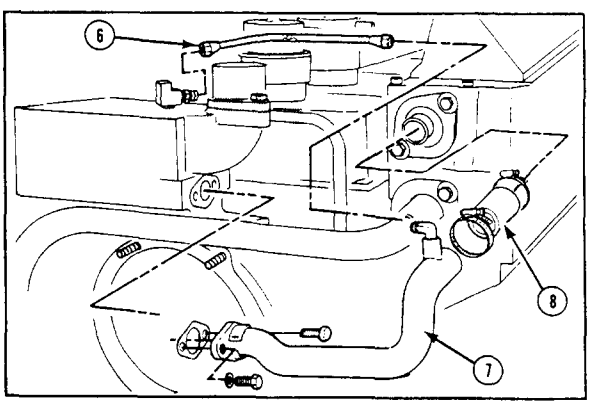

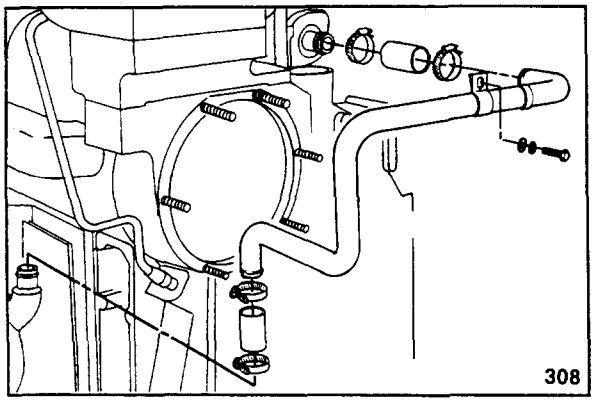


11. Remove the aftercooler water inlet tube. Remove the hoses.

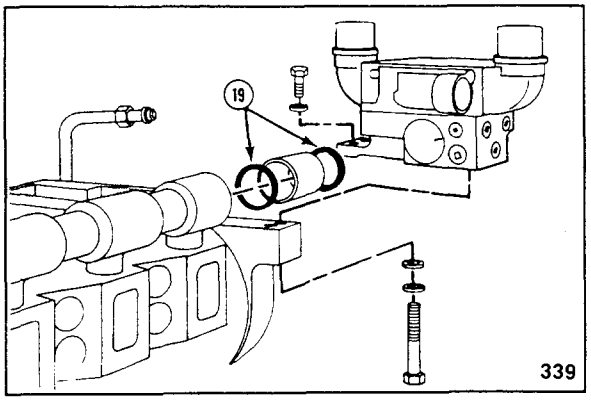


12. Remove the thermostat housing.
    a. Disconnect the air compressor water outlet tube from the thermostat housing.
    b. Remove the remaining three capscrews. Remove the thermostat housing assembly.
    c. Remove the water transfer tube. Remove and discard the two o-rings (19).

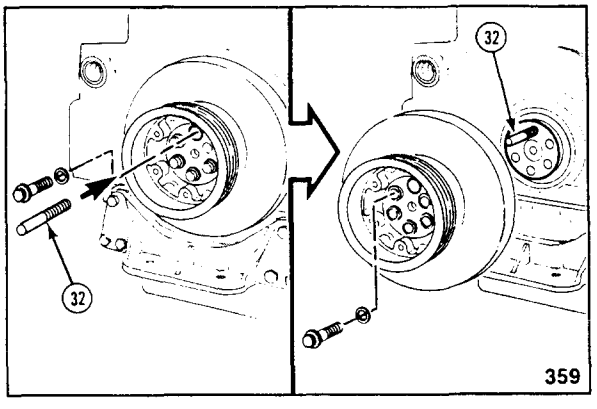


13. Remove the vibration damper.

**Caution: This assembly weighs more than 23 kg [50 lbs.]. Handle securely to avoid dropping.**

    a. Remove one capscrew. Use a 3/4-16 x 5 inch guide stud. Install the guide stud (32).

**Caution: Do not pry or hammer the vibration damper. Damage will result.**

    b. Remove the remaining capscrews. Remove the damper and pulley assembly. Remove the guide stud.

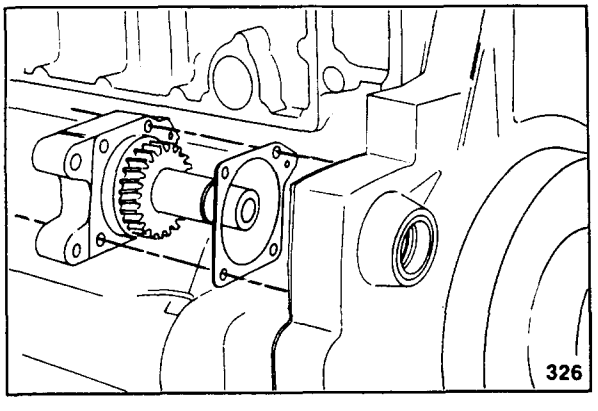


14. Remove the alternator drive pulley and water pump drive. Refer to Procedure 07-37.

15. Remove the fuel pump. Refer to Procedure 05-11.

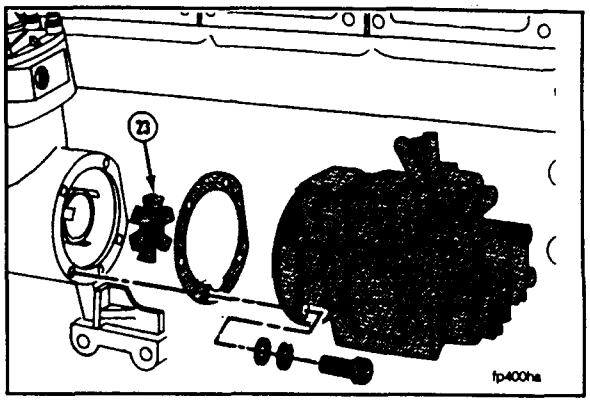


16. Remove the air compressor. Refer to Procedure 04-15 (single cylinder) or 04-16 (two cylinder).

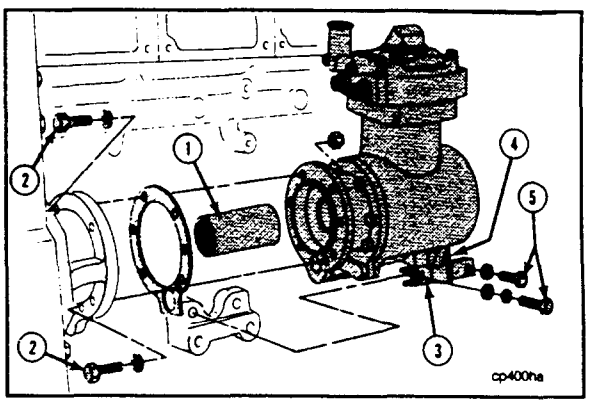


17. Remove the accessory drive pulley and assembly. Refer to Procedure 07-31.

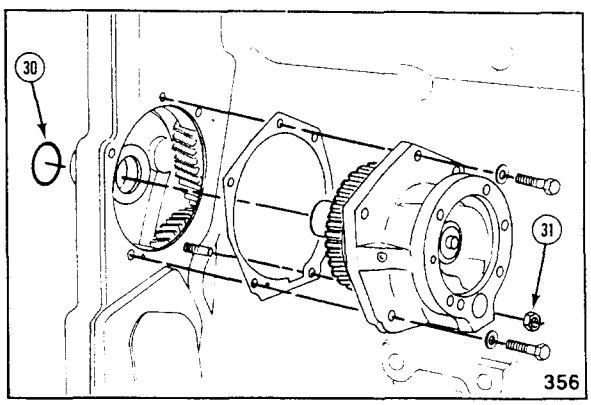


18. Remove the hydraulic pump drive.

**Note:** Some engines contain a cover plate instead of a hydraulic pump drive assembly.

a. Remove the four capscrews.

b. Remove the hydraulic pump drive assembly. Remove and discard the gasket.

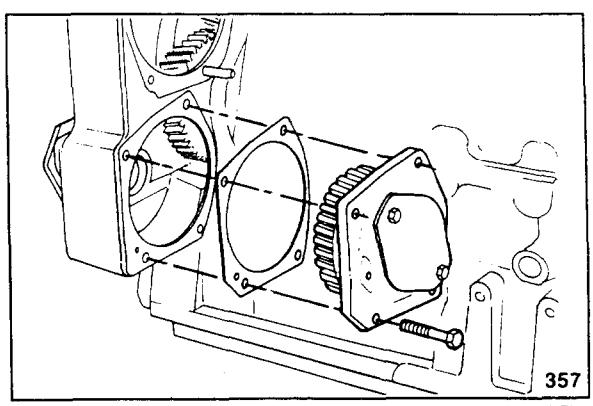

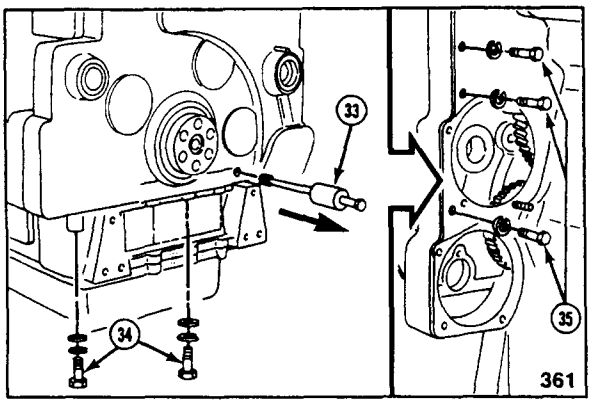


19. Remove the front gear cover.

**Note:** The master dowel must be removed before the one-piece gear cover can be removed.

a. Use a 5/16-18 inch capscrew or a threaded rod. Use an old piston pin or a slide hammer (33). Remove the dowel.

**Note:** The one-piece front cover design contains five capscrews on the bottom (34) and three capscrews on back (35).

b. Remove the capscrews (34 and 35).

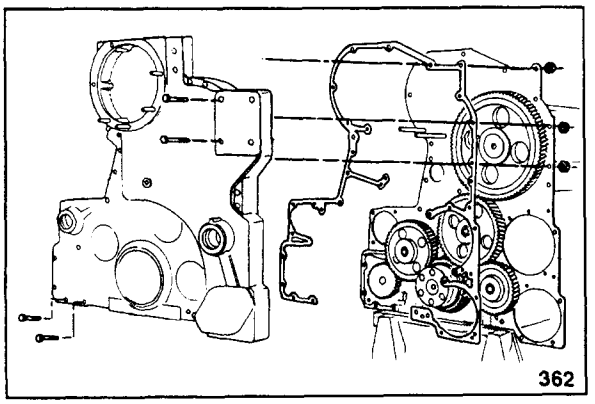


**Note:** The one-piece design has 15 capscrews in the front of the cover.

c. Remove the gear cover. Remove and discard the gasket.

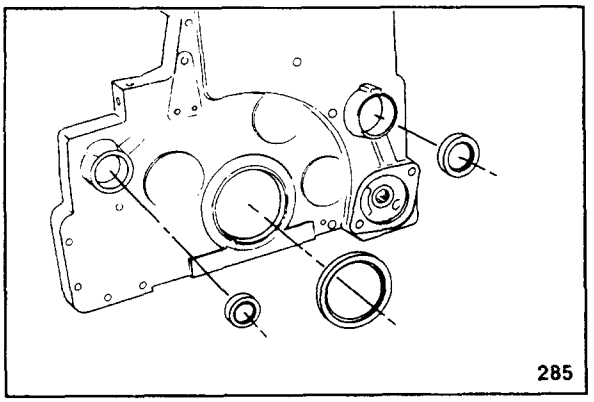


20. Use a mandrel or a drift and a mallet. Remove the oil seals.

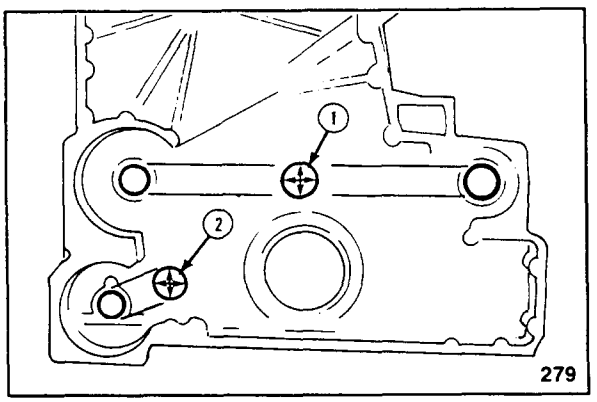


## Check For Reuse

1. Measure the I.D. of the bushings. Replace the bushings if not within specifications. Refer to the K19 Shop Manual.

| Bushing I.D. | | |
|---|---|---|
| mm | | in |
| **Accessory Drive and Water Pump Drive (1):** | | |
| 39.75 | MIN | 1.565 |
| 39.90 | MAX | 1.571 |
| **Hydraulic Pump Drive (2):** | | |
| 38.13 | MIN | 1.501 |
| 38.25 | MAX | 1.506 |

2. Remove and check the barring mechanism.
   a. Push the shaft in. Hold in position. Slide the worm gear until the spring is compressed.
   b. Use a screwdriver. Remove the retaining ring.

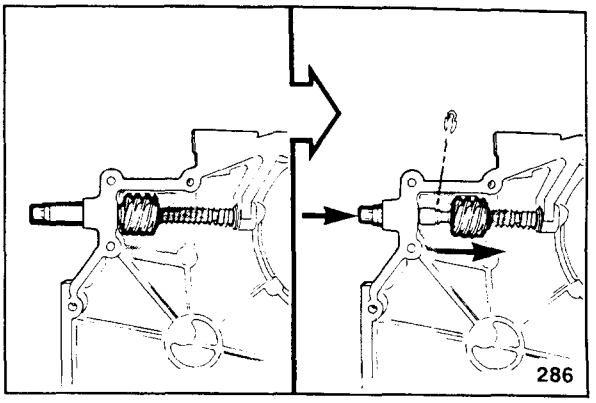


   c. Remove the parts:
      - Shaft
      - Spring
      - Worm gear
   d. Remove the o-ring from the shaft. Discard the o-ring.
   e. Use solvent to clean the parts. Flush the oil drillings. Dry with compressed air.
   f. Check the parts for damage.

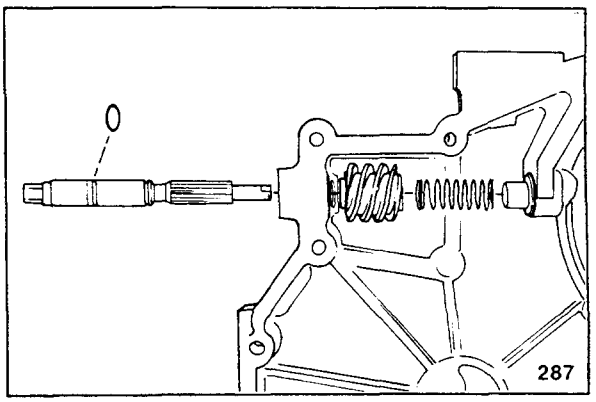


   g. Use vegetable oil to lubricate the o-ring.
   h. Install the o-ring on the barring shaft.
   i. Install the parts:
      - Worm gear
      - Spring
      - Shaft

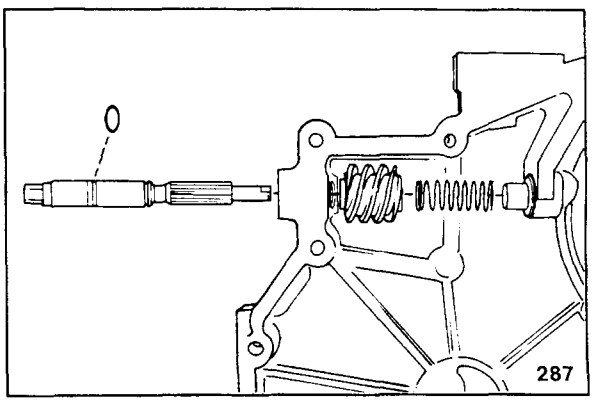


   j. Install the retaining ring.
      Rotate the shaft. Check for correct assembly.

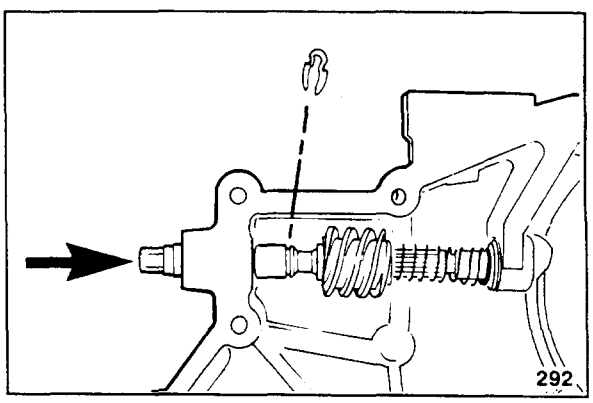

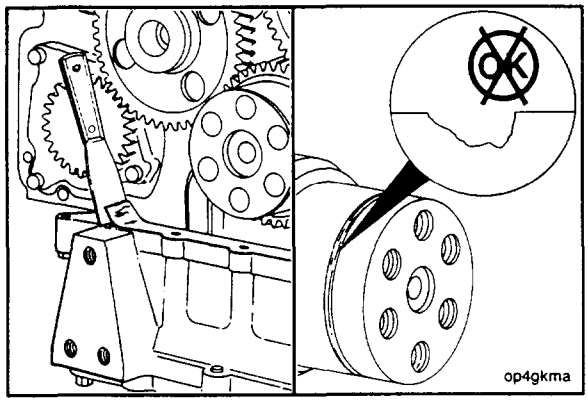


3. Remove the gasket from the top of the oil pan adapter. Do not remove the gasket under the spacer plate.
4. Check the crankshaft for damage in the oil seal location. Refer to the Alternate Repair Manual if a wear sleeve must be installed.

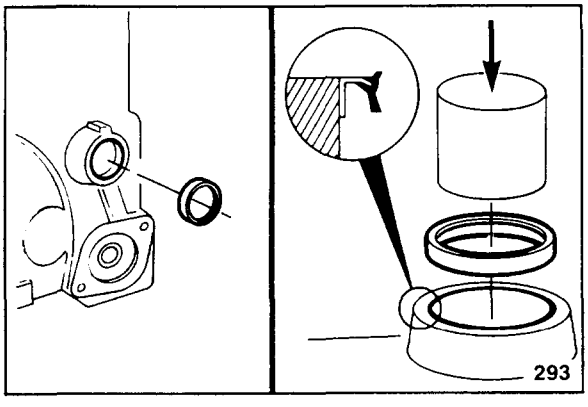


## Install

1. Measure the height of the accessory drive seal boss.

| When the boss height is: | Install the seal: |
|---|---|
| 35mm [1 3/8 inch] | even with the top of the boss. |
| 38mm [1 1/2 inch] | 3mm [1/8 inch] below the top of the boss. |

2. Use a mandrel. Install the accessory drive seal.

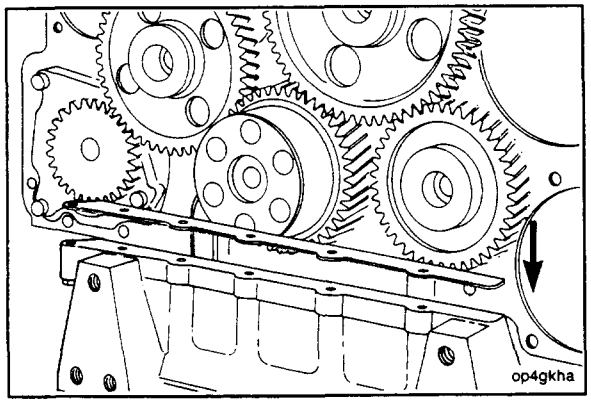


**Note:** Trim the gasket to the correct width since the spacer plate is already installed.

3. Install the service gasket piece on top of the oil pan adapter. Use a spray adhesive to hold it in position. Use Cummins sealant, Part No. 3377132, at the joints.

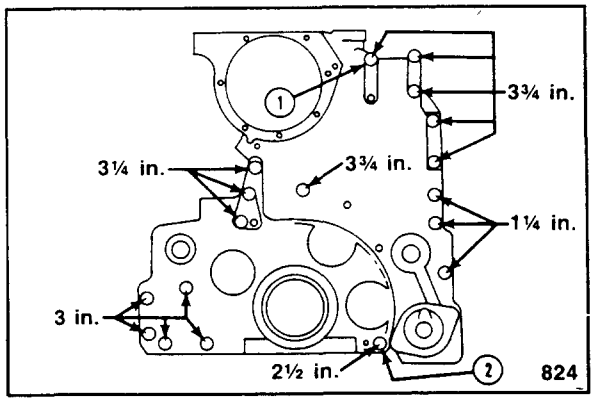


4. This illustration shows the capscrew length requirements for the one-piece front cover.

   Capscrew (1) is installed in the gear cover clamping plate.

   Capscrew (2) must be a 12-point type for head clearance.

**Note:** Do not tighten the capscrews until the master dowel pin is installed.

5. The use of guide bolts will help during assembly.

   Install the front cover gasket, cover, and capscrews.

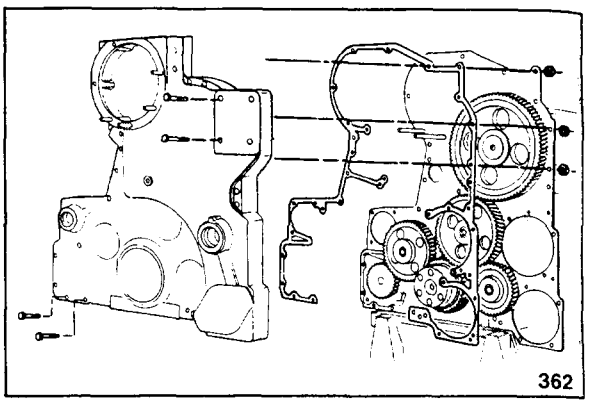


6. Put the clamping plate in position and begin the installation of the capscrew. The plate must remain loose until the fan hub or the cover plate is installed.

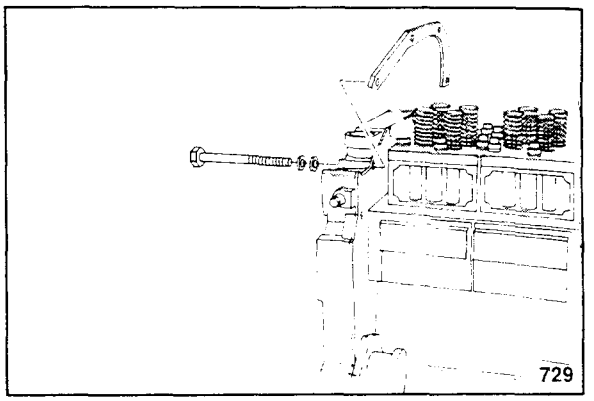


7. Use a 5/16-8 x 3 inch capscrew and a mallet.

   Install the threaded master dowel. Drive the dowel in until it touches the bottom of the hole in the block.

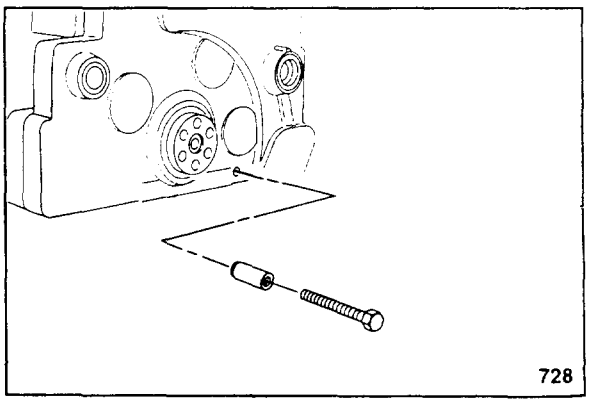


8. Tighten the mounting capscrews in the sequence shown.

**Note:** Sequence No.1, 2, and 3 capscrews are located at the back of the spacer plate.

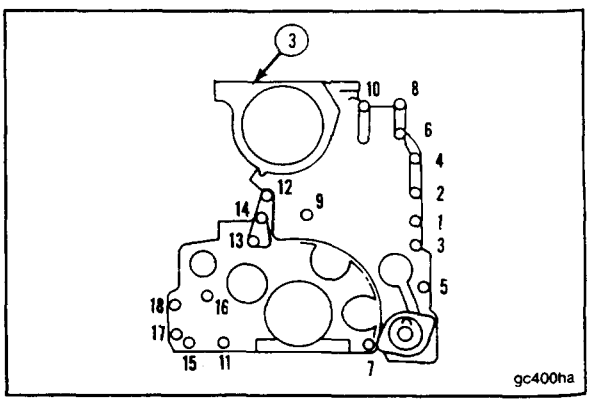

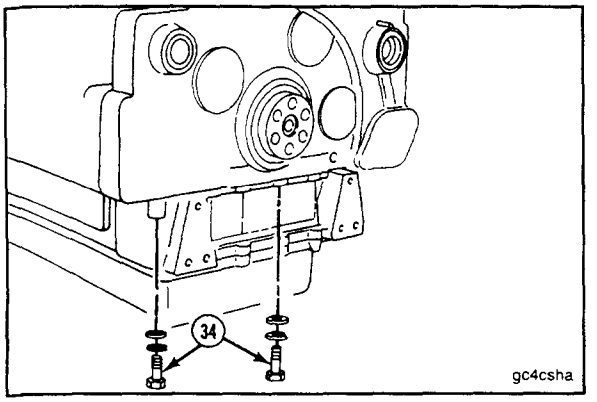


9. Install the five capscrews (34) that attach to the bottom of the oil pan adapter. Tighten the capscrews to 45 N•m [35 ft-lb].

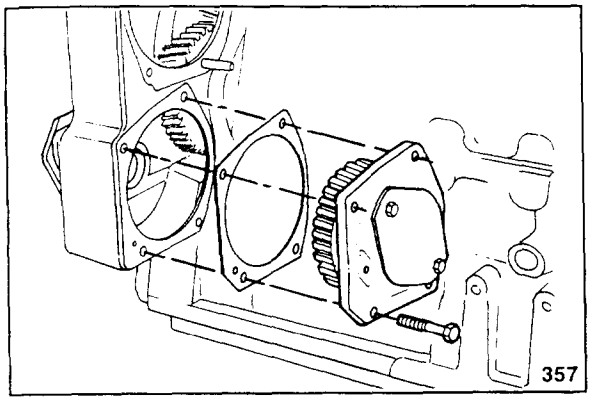


10. Install the hydraulic pump drive.
    a. Using engine oil, lubricate the bushing in the cover.
    b. Install the gasket, drive or cover, washers, and capscrews. Tighten the capscrews to 45 N•m [35 ft-lb].

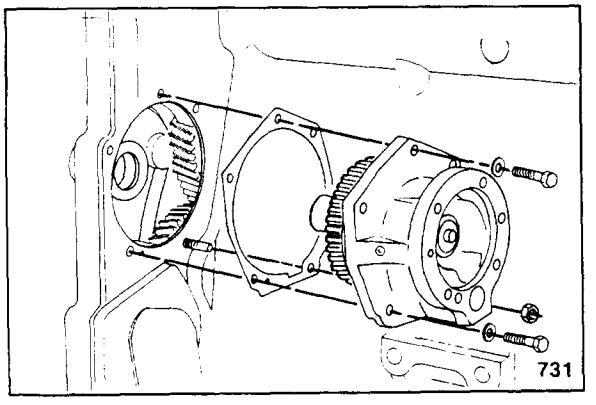


11. Install the accessory drive assembly and pulley. Refer to Procedure 07-31.

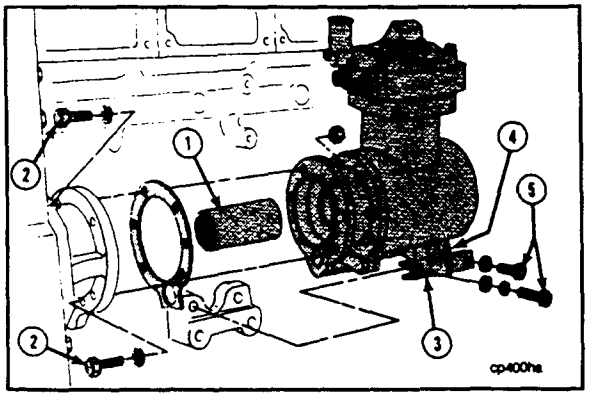


12. Install the air compressor. Refer to Procedure 04-15 (single cylinder model) or 04-16 (two cylinder model).

13. Install the fuel pump. Refer to Procedure 05-11.

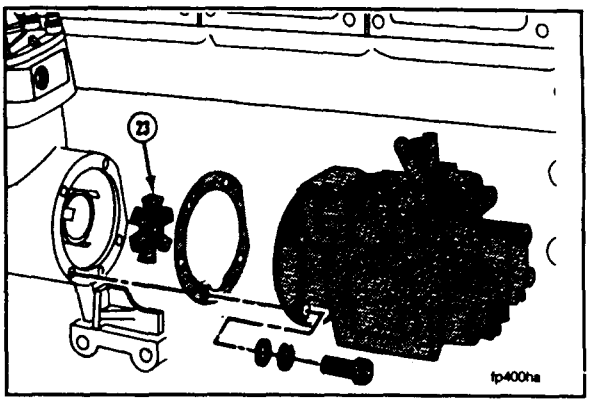


14. Install the water pump drive and alternator drive pulley. Refer to Procedure 07-37.

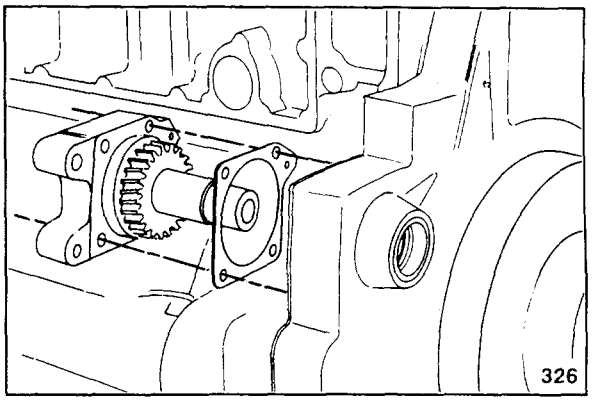


15. Install the front crankshaft seal. Refer to Procedure 07-36.

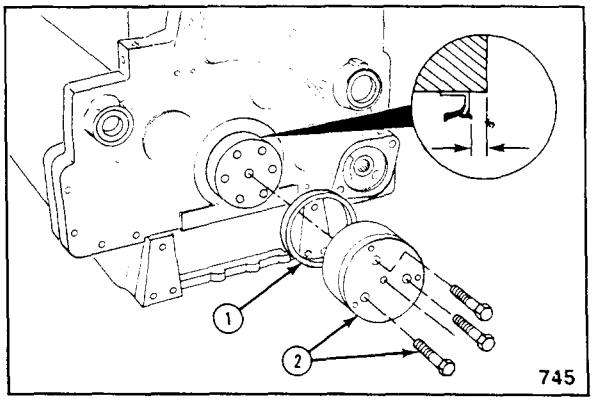


16. Install the vibration damper and fan drive pulley. Refer to Procedure 07-33.

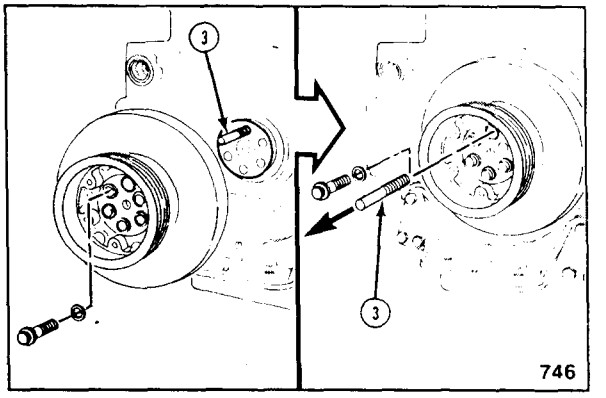

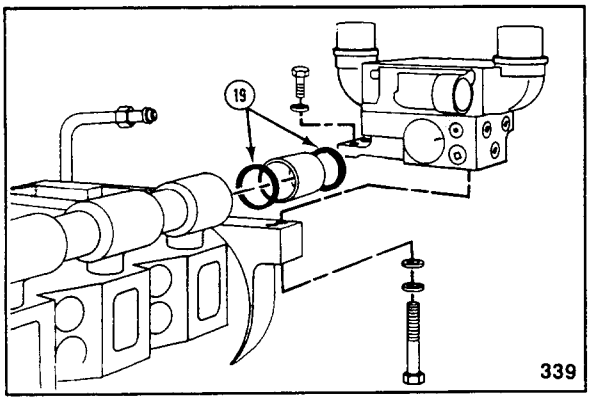


17. Install the thermostat housing and support. Refer to Procedure 01-35.

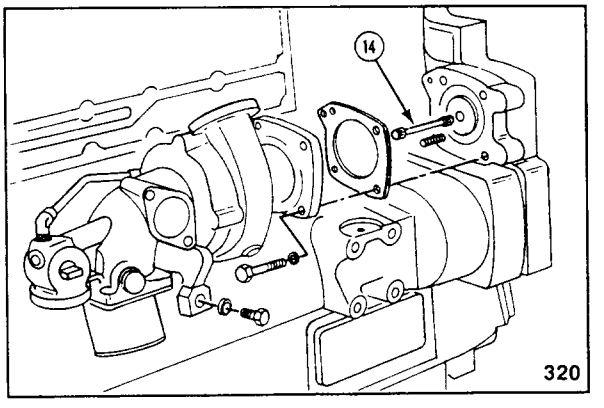


18. Install the water pump. Refer to Procedure 01-30.

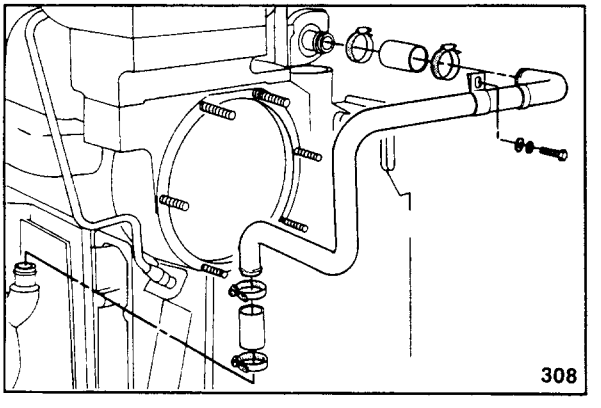


19. Install the parts for the aftercooler water inlet tube as shown. Tighten the capscrews to 45 N•m [35 ft-lb]. Tighten the clamps to 5.6 N•m [50 in-lb].

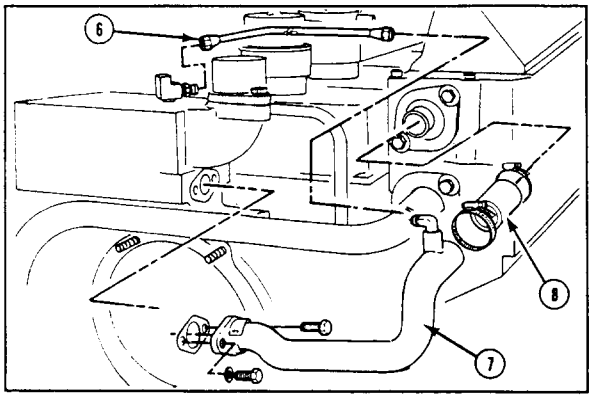


20. Install the aftercooler water outlet tube (7) and hose (8) to the aftercooler and thermostat housing. Tighten the capscrews to 45 N•m [35 ft-lb]. Tighten the clamps to 5.6 N•m [50 in-lb].

    Install the deaeration tube (6) as shown.

21. Install the Fan Hub Idler Assembly. Refer to Procedure 01-28.

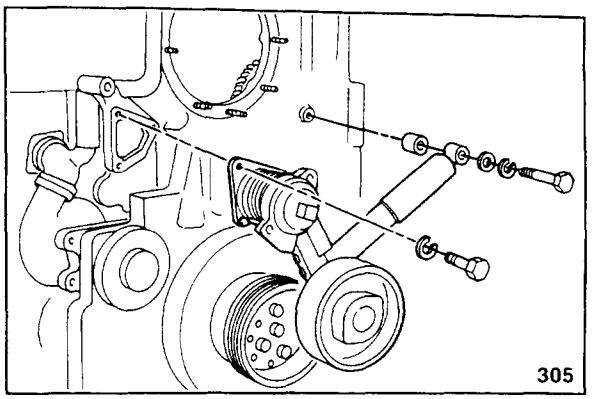


22. Install the Belt Driven Fan Hub. Refer to Procedure 01-26.

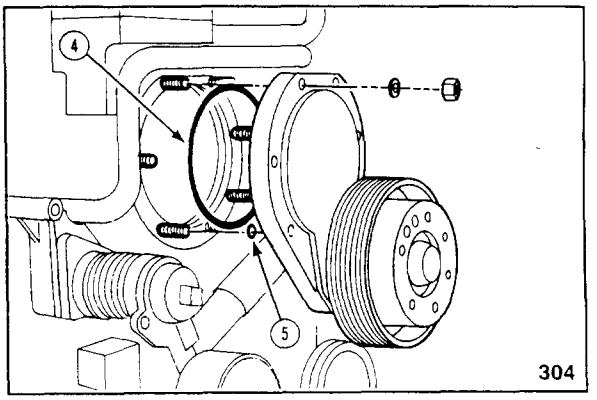


23. Install the Gear Driven Fan Hub. Refer to Procedure 01-27.

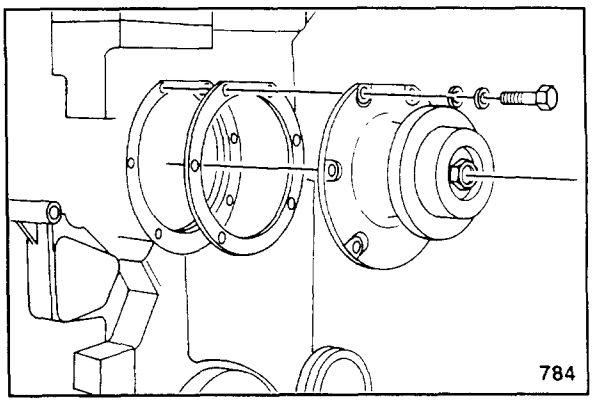


24. Install the alternator and belt. Refer to Procedure 06-09.

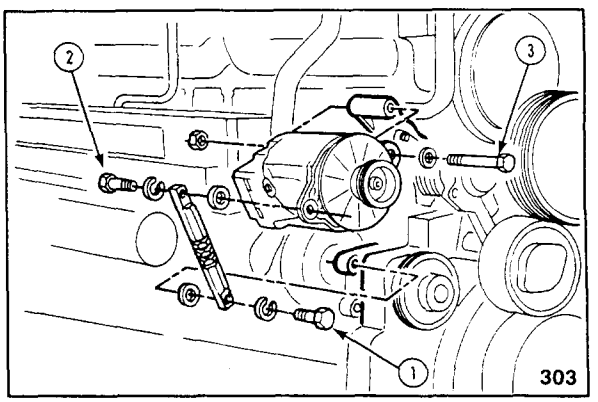

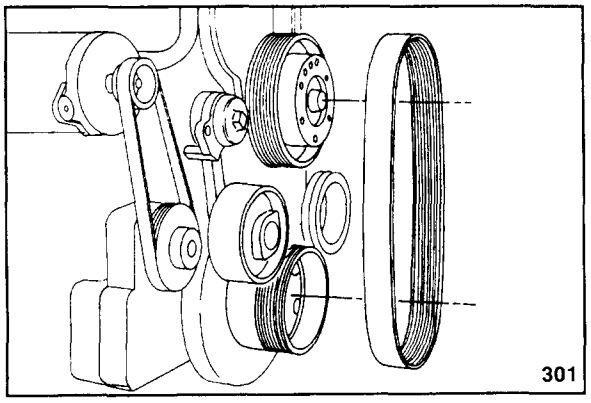


25. Install the fan belt. Refer to Procedure 01-23.

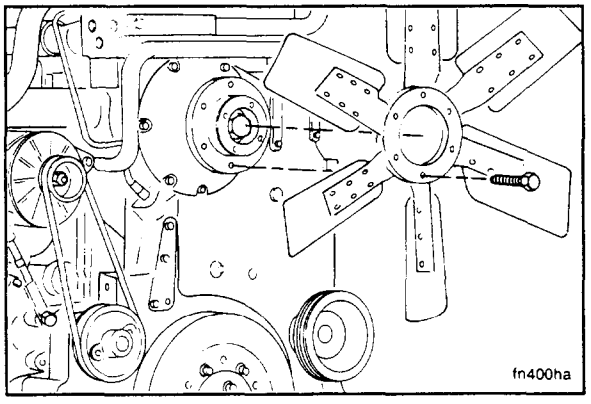


26. Install the fan. Tighten the capscrews to 135 N•m [100 ft-lb].

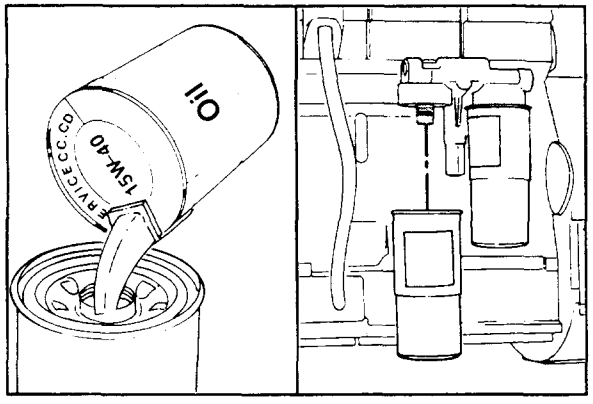


27. Install new full flow oil filters. Refer to Procedure 02-11.

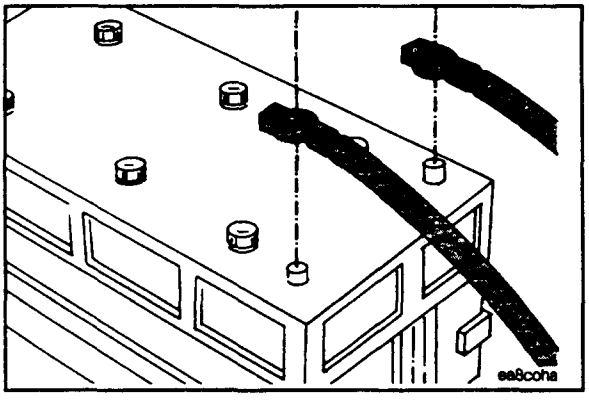


28. Connect the batteries and starter air.

29. Fill the cooling system. Refer to Procedure 01-07.
30. Operate the engine to normal operating temperature and check for leaks.

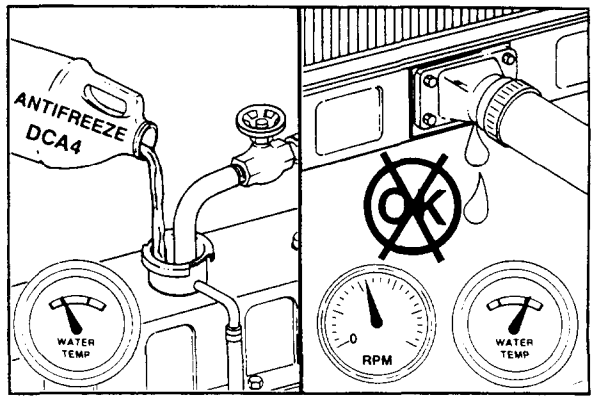


## Camshaft Gear - Replace (Camshaft Installed) (07-40)

1. Use the Part No. 3376400 Camshaft Gear Puller Kit to remove the camshaft gear.

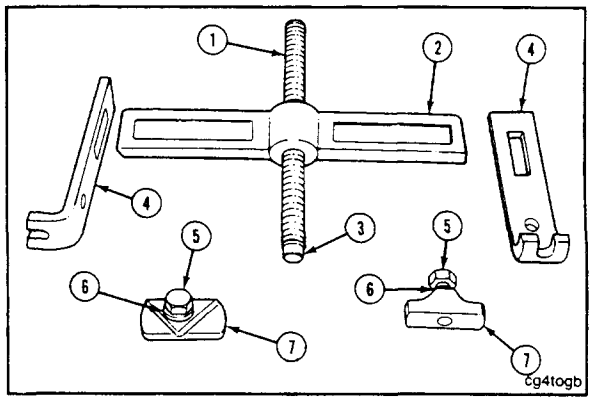


2. Use a mallet and a drift. Bend the lockplate off of the two mounting capscrews.
3. Remove the capscrews and the lockplates. These capscrews must be removed to allow clearance for the gear puller.

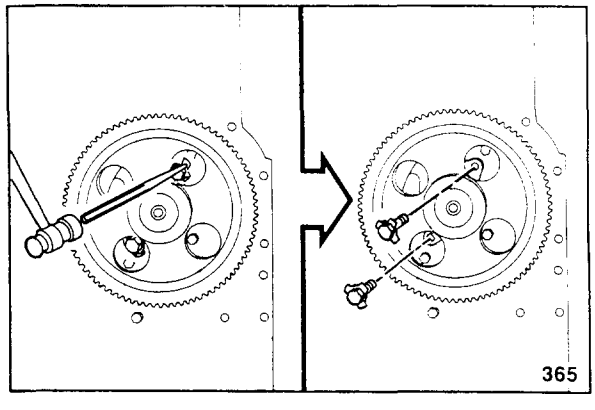


**Caution: The reversible jaw feet must point out as shown. Incorrect placement of the feet can allow the tool to come loose when removing the gear. Personal injury can result.**

4. Assemble the adapter (7) onto the reversible jaw (4). The reversible jaw feet must point out (as shown) to provide the proper pulling angle.

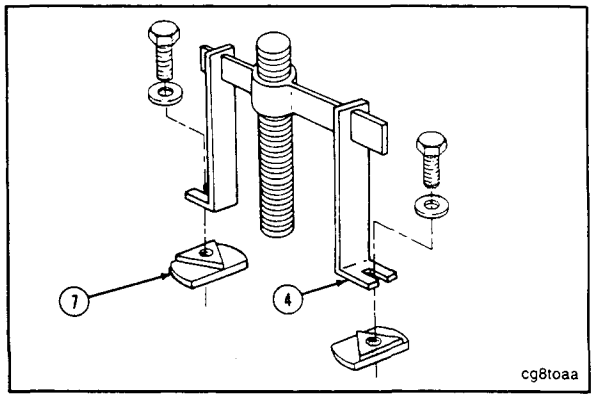

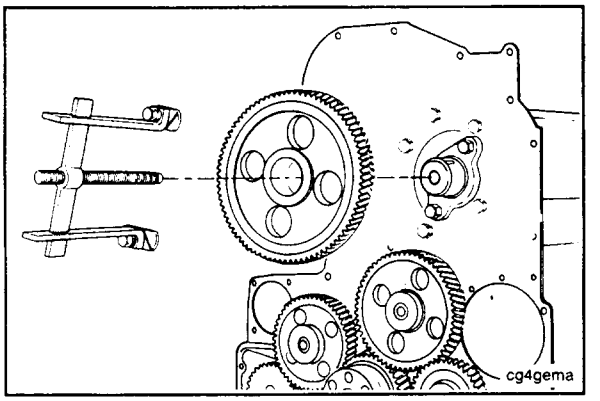


5. Attach the puller to the gear.

   Remove the gear.

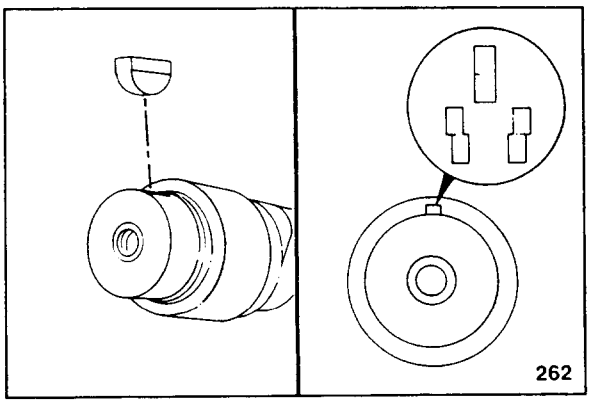


Camshaft keys are available in different sizes (amount of offset). The injection timing is controlled by

- The selection of the camshaft key.
- The direction of the key offset when compared to the camshaft gear rotation.
- The amount of offset.

6. Check and record the direction of the key offset when compared to the camshaft gear rotation (same or opposite).
7. Remove the key.

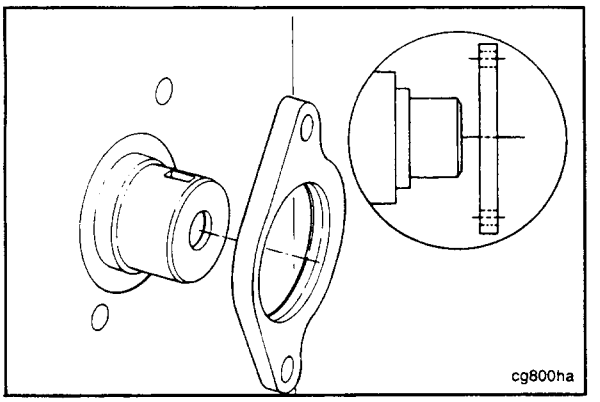


8. Remove the camshaft thrust flange.

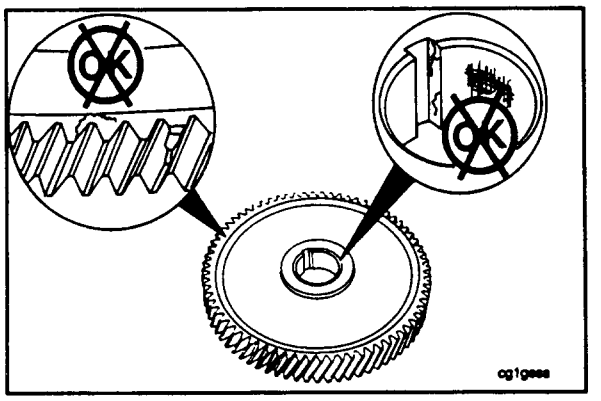


## Check For Reuse

1. Visually inspect the camshaft gear for cracks, chipped or broken teeth.
2. Inspect the bore of the gear for fretting or burrs.

3. Inspect the gear keyway for burrs.
4. Remove burrs with fine crocus cloth.

   **Note:** If the keyway is damaged or the burrs cannot be removed with fine crocus cloth, the gear must be replaced.

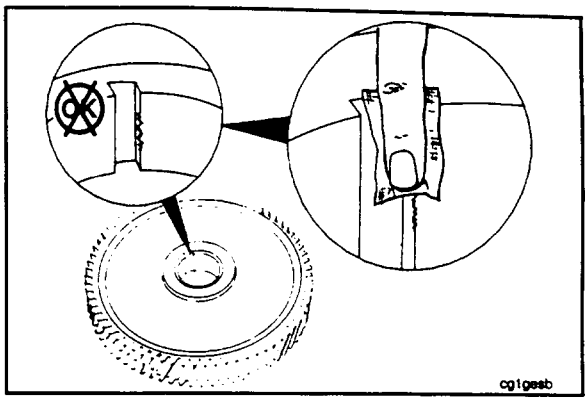


5. Measure the I.D. of the camshaft gear.

| Camshaft Gear I.D. | | |
|---|---|---|
| mm | | in |
| 57.124 | MIN | 2.2490 |
| 57.150 | MAX | 2.2500 |

The gear MUST be replaced if the I.D. is not within specifications.

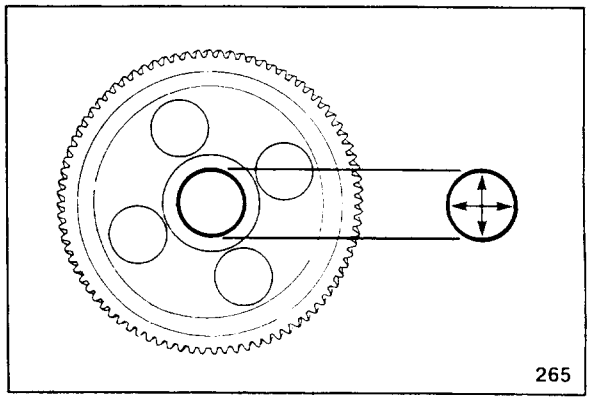


6. Visually inspect the camshaft nose for fretting or burrs.

**Note:** If fretting or burrs cannot be removed with fine crocus cloth, replace the camshaft.

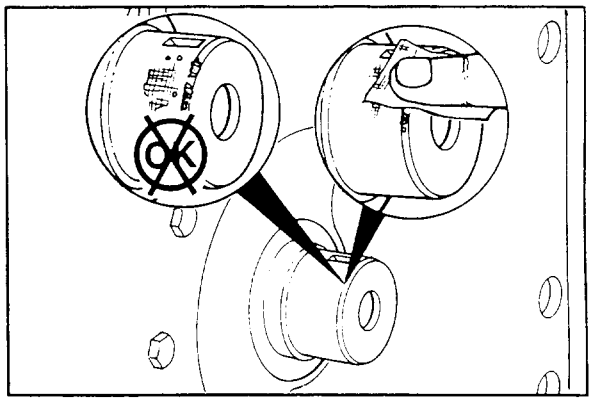


7. Measure the camshaft gear journal.

| Camshaft Gear Journal O.D. | | |
|---|---|---|
| mm | | in |
| 46.987 | MIN | 1.8499 |
| 47.013 | MAX | 1.8509 |

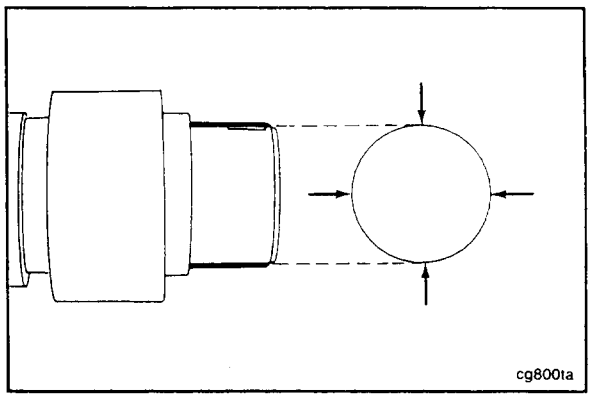

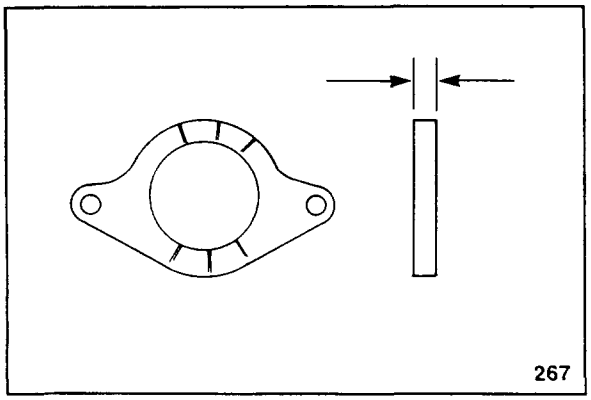


8. Check the thrust bearing for damage. Measure the thickness.

| Camshaft Thrust Bearing Thickness | | |
|---|---|---|
| mm | | in |
| 9.12 | MIN | 0.359 |
| 9.44 | MAX | 0.372 |

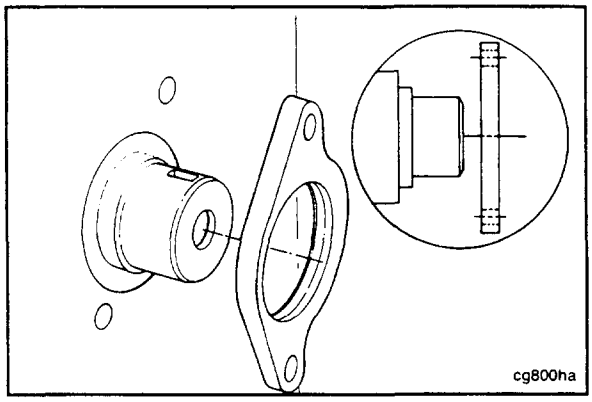


## Install

1. Use Lubriplate@ No. 105, or equivalent. Lubricate the O.D. of the camshaft at the gear location.
2. The grooves in the thrust plate MUST be positioned toward the gear. Install the thrust plate.

**Caution: The gear spacer plate gasket must NOT prevent the thrust plate from being flat against the block. If necessary, trim the gasket.**

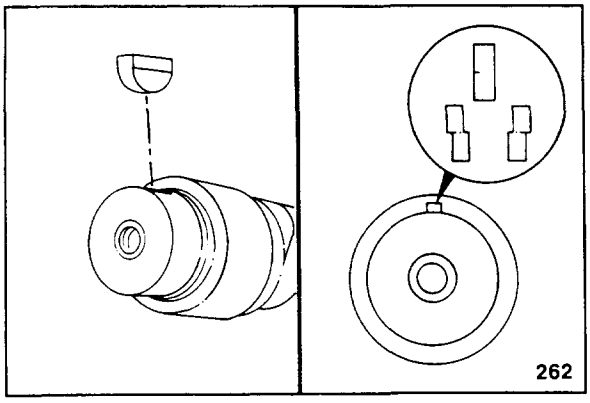


Camshaft keys are available in different sizes (amount of offset). The injection timing is controlled by:

- The selection of the camshaft key.
- The direction of the key offset when compared to the camshaft gear rotation.
- The amount of offset.

3. Install the same part number key in the same orientation as the key that was removed.

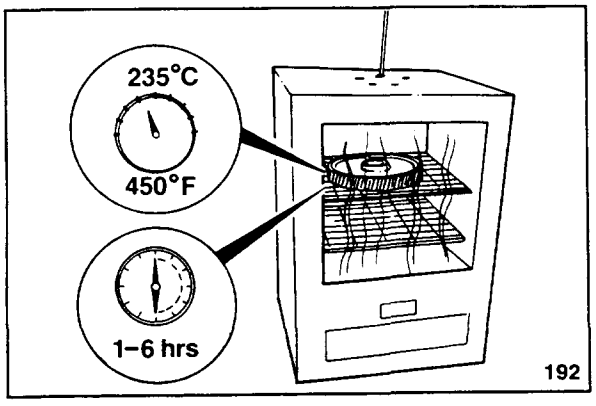


**Caution: Wear protective clothing to prevent personal injury from burns.**

**Caution: Do not exceed the specified time or the temperature. Damage to the gear and the gear teeth will result.**

**Caution: Do not attempt to install the gear without using heat.**

4. Use an oven and adjust the heat to 235°C [450°F]. Heat the gear for a minimum of one hour but no more than a maximum of six hours. The I.D. of the gear will become larger and will simplify installation.

**Caution: Wear protective clothing to prevent personal injury from burns.**

**Note:** The timing mark on the camshaft gear must be visible from the front of the gear after it is installed on the camshaft.

5. Remove the gear from the oven and install it on the camshaft. The keyway in the gear must be aligned with the key in the camshaft.

**Caution: Allow the gear to air cool slowly. Do not use water or oil to reduce the cooling time. This will cause the gear to crack.**

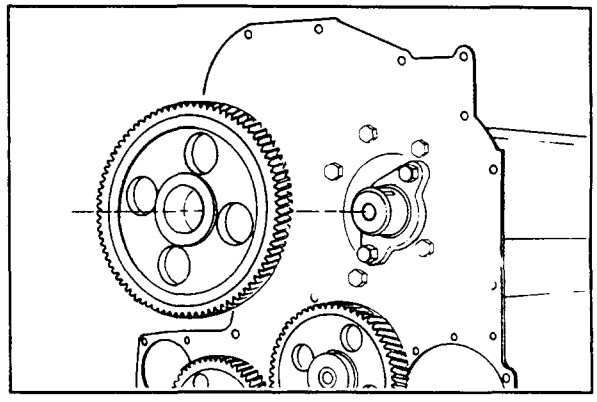

6. Install a "C-clamp" around the gear support plate and the camshaft gear to hold the gear in position as it cools. Remove the "C-clamp" after the gear has cooled to room temperature (approximately 10 minutes).

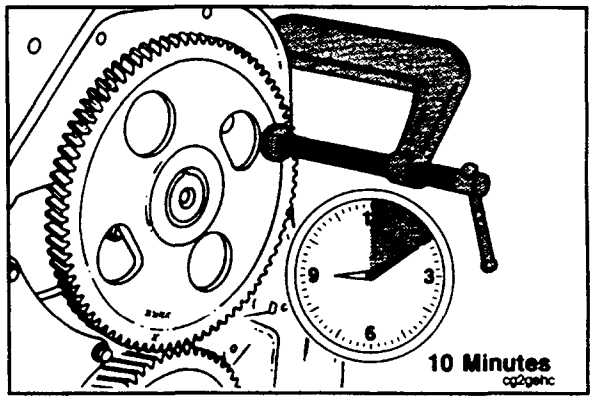


**Note:** If necessary, rotate the crankshaft so that the holes in the camshaft allow access to the capscrew holes in the thrust plate.

7. Install the two capscrews and lockplates. Tighten the capscrews to 45 N•m [35 ft-lb].

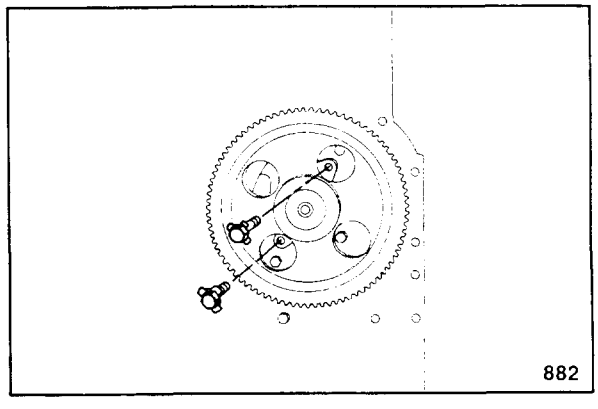


8. Use a dial indicator and measure the camshaft end clearance.

| Camshaft End Clearance | | |
|---|---|---|
| mm | | in |
| 0.15 | MIN | 0.006 |
| 0.33 | MAX | 0.013 |

If the clearance is too small, check for foreign material or a piece of gasket between the thrust plate and the block.

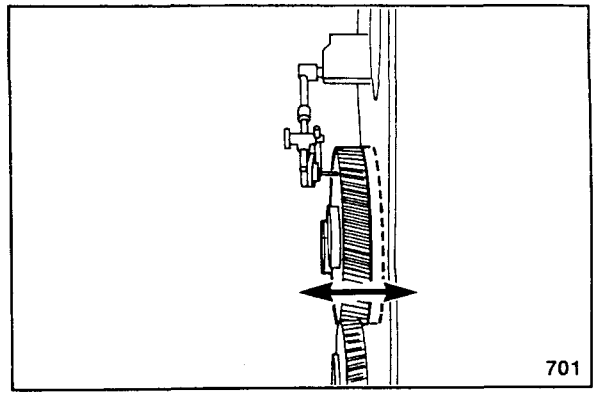

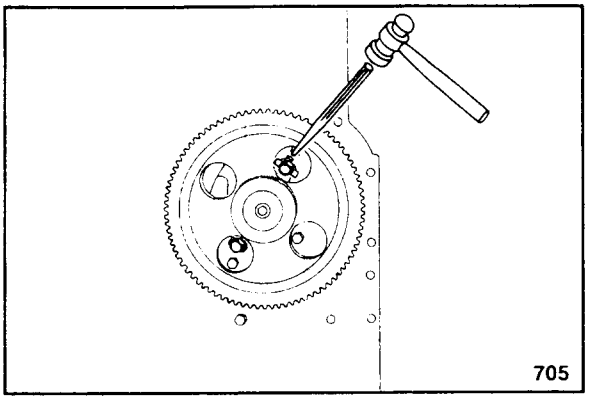


9. Use a hammer and drift. Bend one tab of the lockplate over the thrust plate, and the other tab over the capscrew head. This will prevent the capscrews from turning.

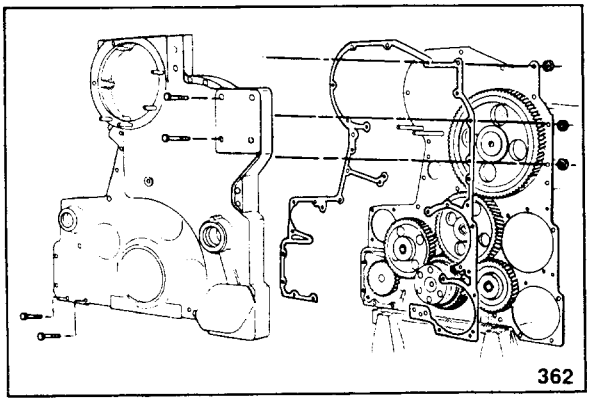


## Gear Cover Plate (Spacer Plate) - Replace (07-41)

### Remove

1. Remove the gear cover and all related components. Refer to Procedure 07-39.

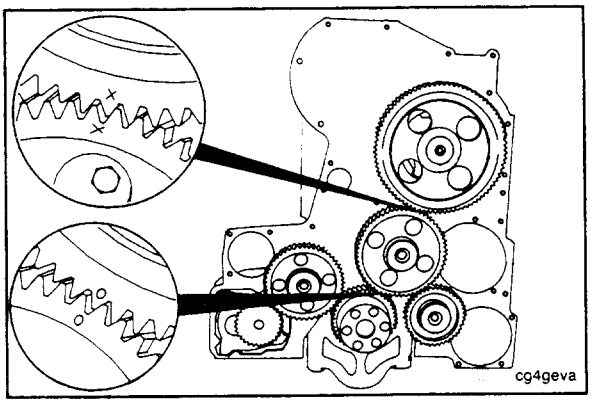


2. Bar the engine by turning the crankshaft until the index marks on the camshaft gear and the crankshaft gear are in alignment.

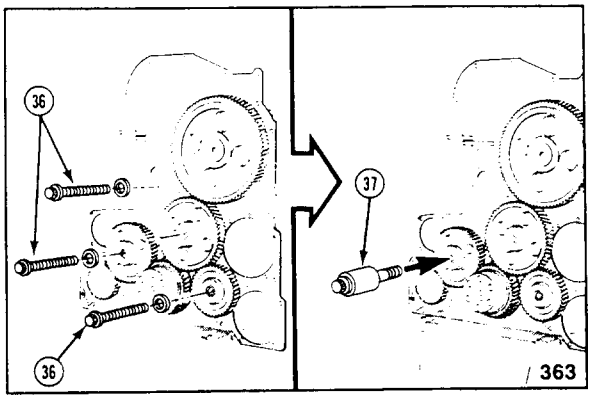


**Note:** The bolt-in idler shaft has a flange that requires the shaft, the idler gear, and the thrust washer to be removed as an assembly.

3. Remove the three capscrews from the idler gears.
4. Use an old piston pin and a K19 cylinder head capscrew as a slide hammer (37). Put the capscrew in the shaft.

5. Use the slide hammer to remove the shaft (38), the two thrust washers (39), and the gear. Remove the items as an assembly.

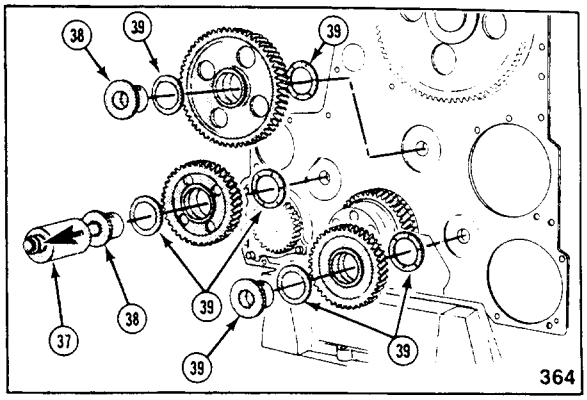


**Note:** Newer engines do not have threads in the shaft. To remove the gear assembly, use two pry bars and pry the gear and shaft from the block.

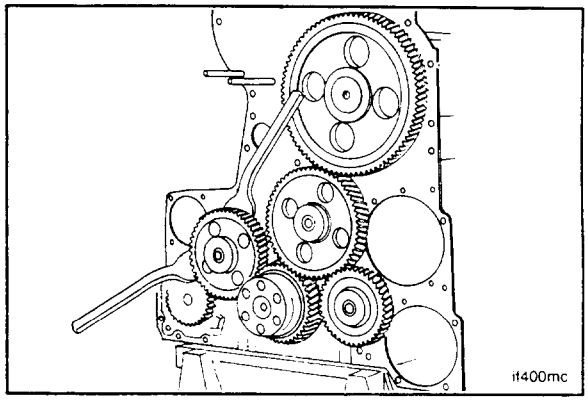


6. Remove the camshaft gear. Refer to Procedure 07-40.

**Note:** If the service tool is not available to remove the camshaft gear, remove the camshaft. Refer to Procedure 07-48.

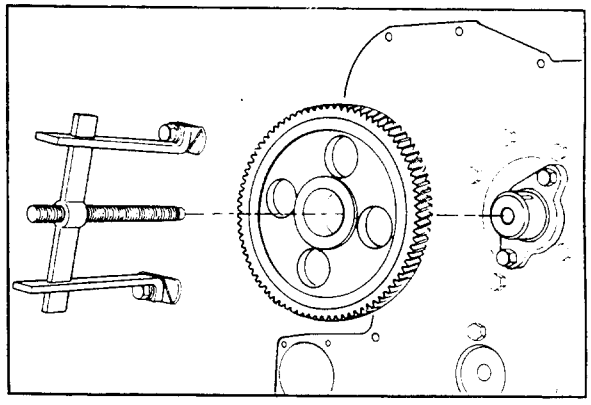

7. Remove the 11 mounting capscrews from the plate. Remove the plate and discard the gasket.

**Note:** Tag the special mounting capscrews for future identification.

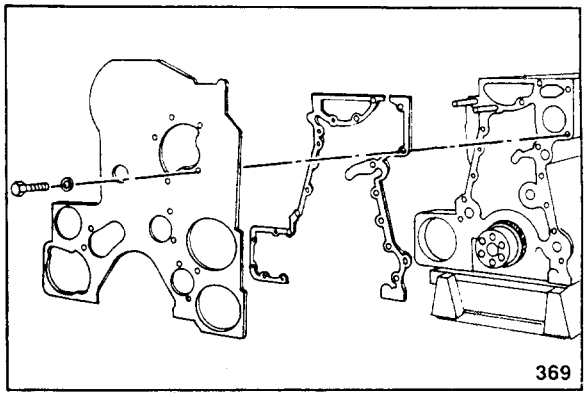

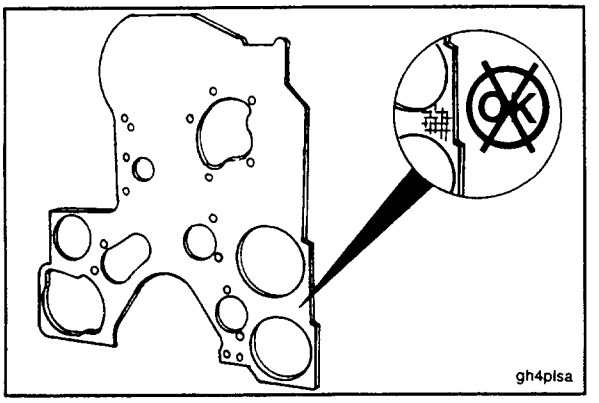


## Check For Reuse

1. Clean and check the plate for reuse. Check for fretting damage on the gasket surface (both sides). Replace the plate if damaged.

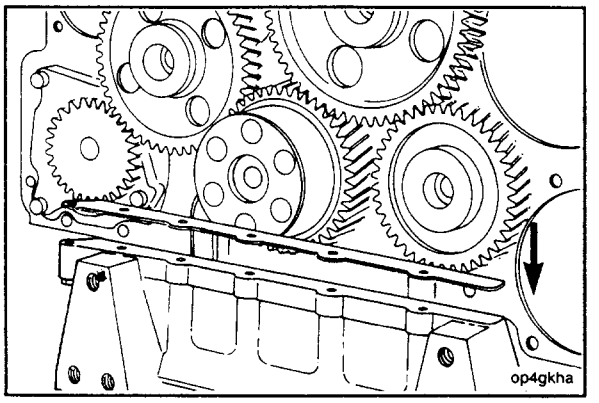


## Install

1. Install the service gasket piece on top of the oil pan adapter. Use a spray adhesive to hold it in position. Use Cummins sealant, Part No. 3377132, at the joints.

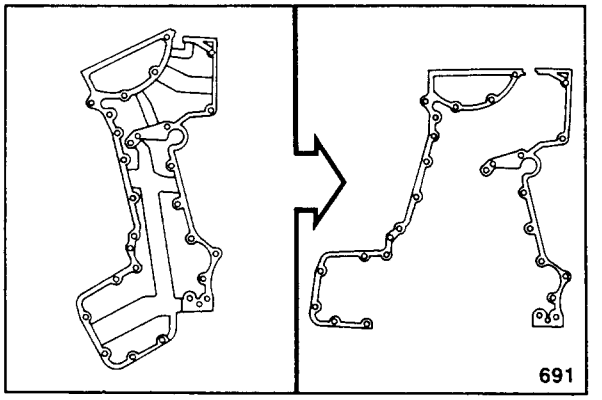


2. Separate the gasket as shown. Discard the center tab sections.

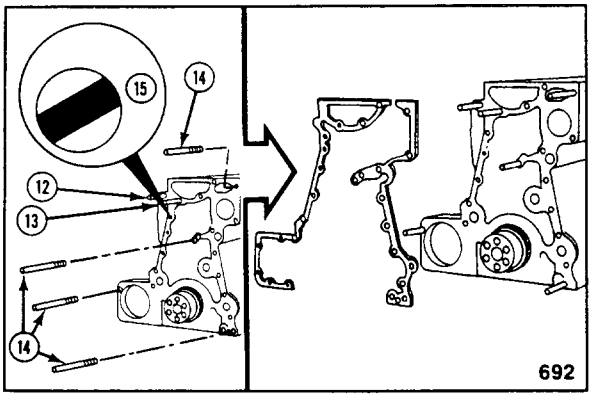


3. If the engine has a belt driven fan hub, install the two studs (12) and (13). The length of the stud (12) is 140 mm [5.5 inch]. The length of the stud (13) is 152 mm [6 inch].
4. The diamond dowel (15) must be installed with the flat surface turned towards the master dowel hole at the lower right hand corner of the block. Guide studs (14) will help during installation.

**Caution: Do not use gasket cement. Damage to the gasket will result.**

**Note:** This gasket is used on old and new style blocks. When used on the old block, there will be a capscrew hole (16) that is not used. It is not necessary to trim the gasket at this location.

5. Use Cummins sealant, Part No. 3377132, or equivalent. Apply a small amount to both sides of the gasket at the butt joint. Install the gasket.

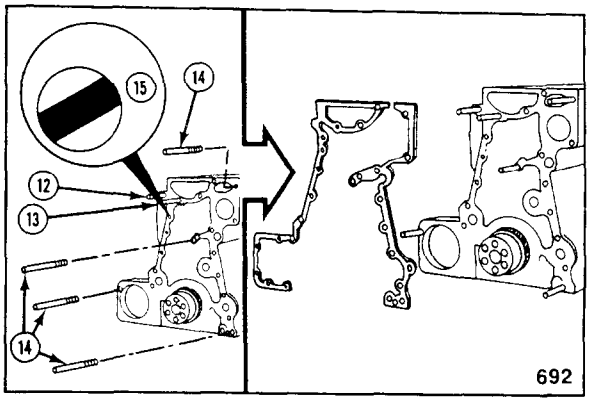

692

**Note:** Special capscrews are required to attach the spacer plate and the gear housing. The capscrews have a captive, cone-shaped washer to maintain torque. The capscrews for the spacer plate are 1 inch.

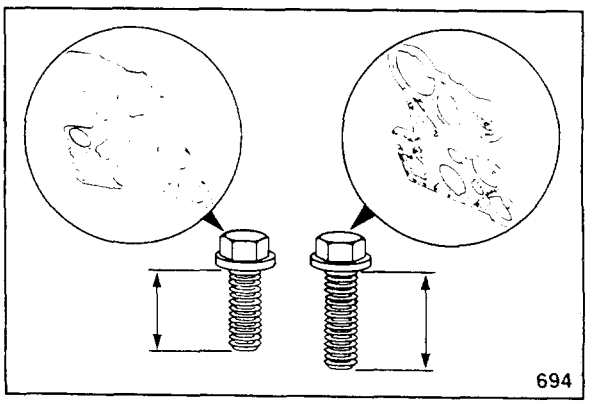
694

6. Install the spacer plate and the 11 capscrews as shown. Remove the guide studs.

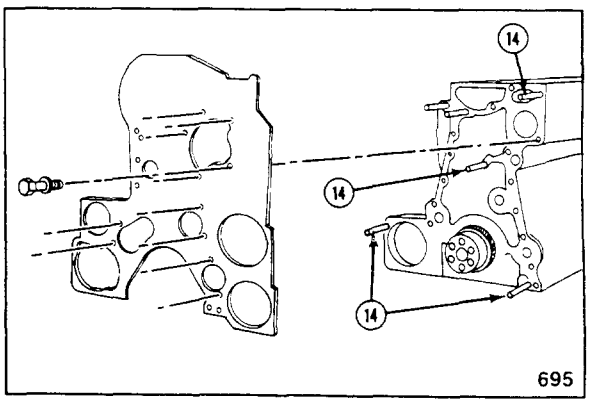

695

**Note:** If the oil pan adapter is removed, spacer plate alignment must be checked. If the oil pan adapter is installed, alignment does not require checking.

7. Use a gauge block, Part No. ST-547, or equivalent, and measure the distance from the bottom of the block to the bottom of the plate.

   The bottom of the plate or housing must be within 0.05 mm [0.002 inch] of the bottom of the block.

8. Align the plate or housing with the bottom of the block if necessary.

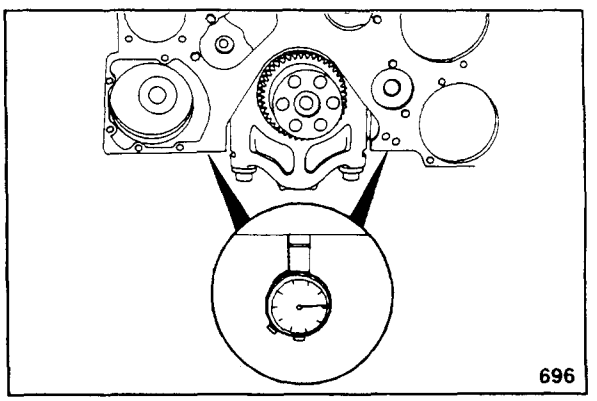
696

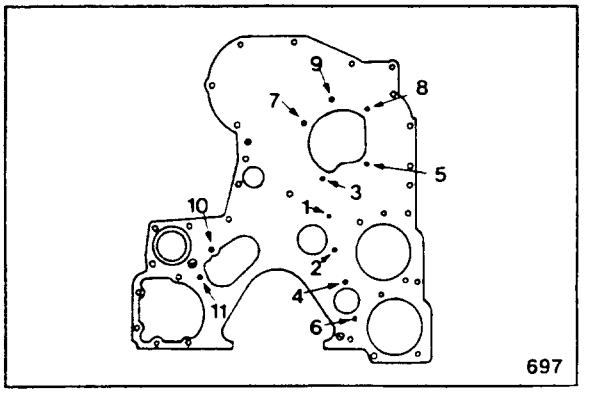


9. Use the sequence shown and tighten the capscrews to 45 N•m [35 ft-lb].

   Measure the plate or housing to block alignment again to be sure it is within specifications.

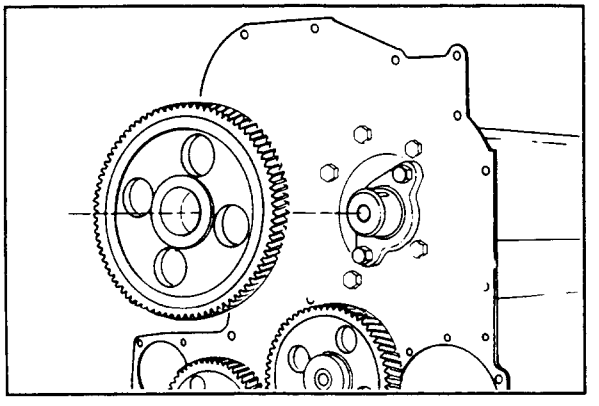

10. Install the camshaft gear. Refer to Procedure 07-40.

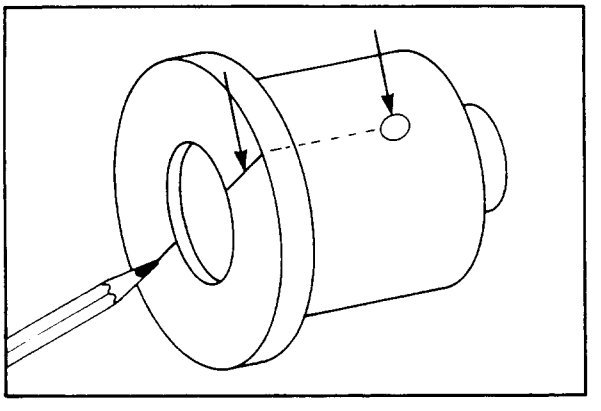

**Caution: Engines that contain a hydraulic pump must have the oil holes in the hydraulic pump idler shaft as shown. Idler gear bushing failure will result if the oil holes are not aligned correctly.**

11. Mark the flange to show oil hole orientation.

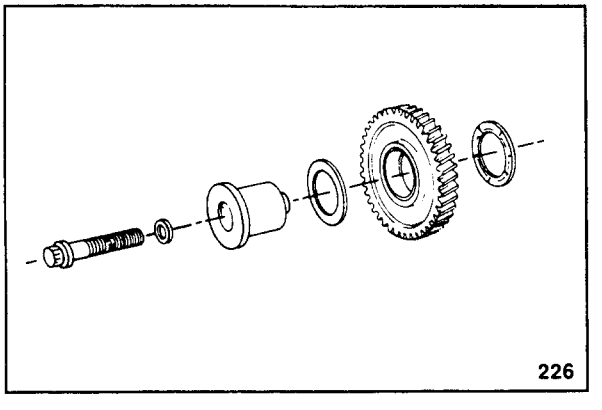


**Caution: The grooves in the thrust washers must be turned towards the gear.**

**Note:** The timing marks on the camshaft idler gear must be visible when the gear is installed.

12. Lubricate the gear bushing, shaft, and the thrust washer with Lubriplate No. 105, or equivalent.

13. Lubricate the capscrew with engine oil. Assembly the parts as shown.

14. Start the capscrew in the threads in the block.

**Caution: Do not allow the inner thrust washer to fall between the shaft and the block.**

15. Use the capscrew to pull the shaft into the bore.

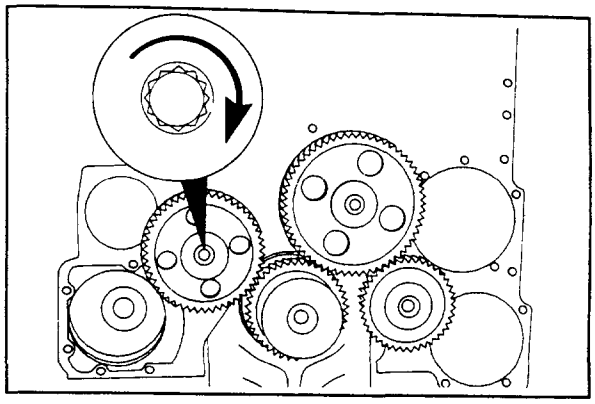

**Note:** The camshaft idler gear is the only idler gear that has timing marks.

16. Align the "ZERO" on the idler gear with the "ZERO" on the crankshaft gear. Align the "X" on the camshaft gear with the "X" on the idler gear.
17. Use the capscrew to pull the shaft into the bore. Tighten the capscrews to 245 N•m [180 ft-lb].

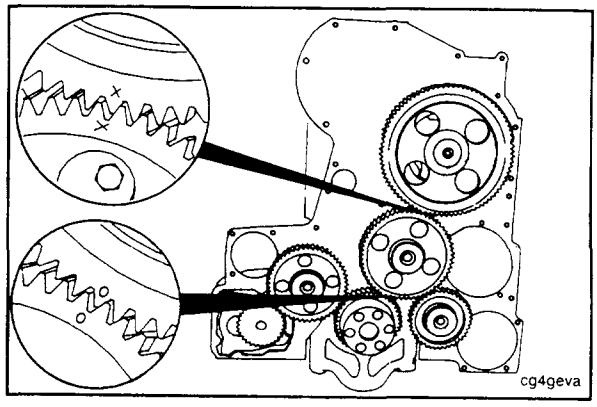


**Caution: Engines that contain a hydraulic pump must have the oil holes in the hydraulic pump idler shaft oriented as shown. Idler gear bushing failure will result if the oil holes are not aligned correctly.**

18. Align the oil holes in the shaft to an angle 45° to the left of vertical.
19. Use the capscrew to pull the shaft into the bore. Tighten the capscrew to 245 N•m [180 ft-lb].

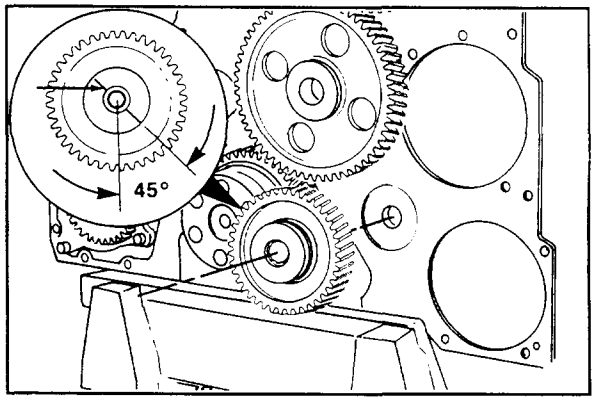


**Caution: Engines that do not have a hydraulic pump drive must have a plug installed in place of the idler shaft. Low oil pressure will result if the plug is omitted.**

**Caution: The capscrew that is used for the plug must not protrude beyond the block.**

20. Use a 9/16-UNF-inch capscrew, lock washer, and a plain washer that is larger than the block bore. Tighten the capscrews to 65 N•m [50 ft-lb].

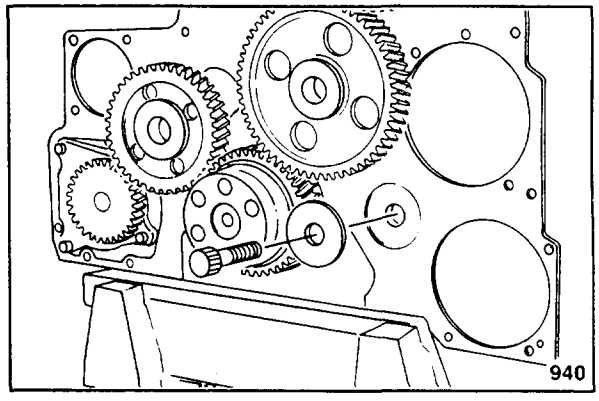

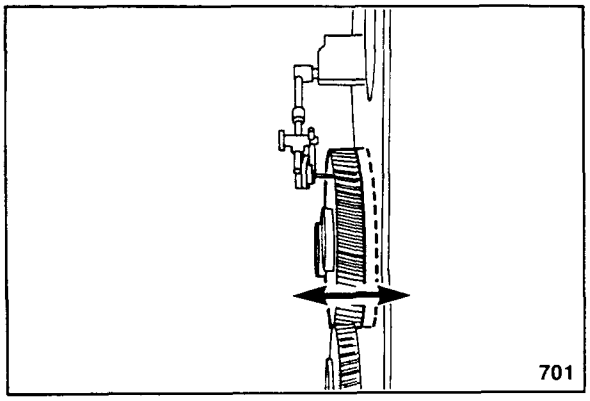


21. Use a dial indicator and measure the idler gear end clearance.

| Idler Gear End Clearance | | |
|---|---|---|
| mm | | in |
| 0.10 | MIN | 0.004 |
| 0.36 | MAX | 0.014 |

**Note:** If the clearance is not within specifications, check for foreign material between the parts or check for proper location of the thrust washers. Oversize thrust washers are available.

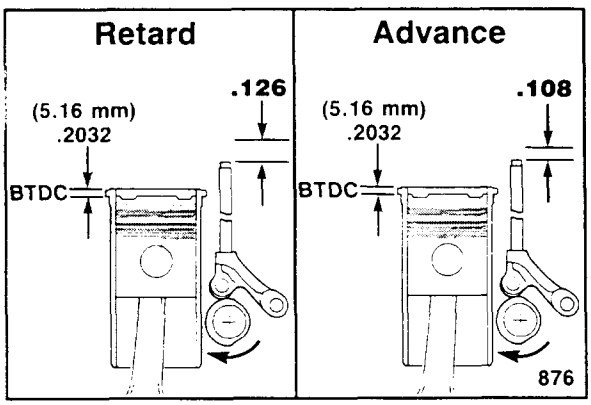


22. If the camshaft gear was replaced check the injection timing. Machine tolerances can cause the timing to be out of specifications. Refer to Procedure 07-20.

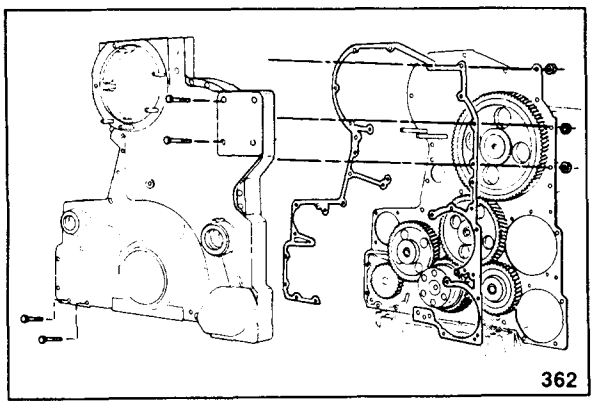


23. Install the gear cover and related components. Refer to Procedure 07-39.

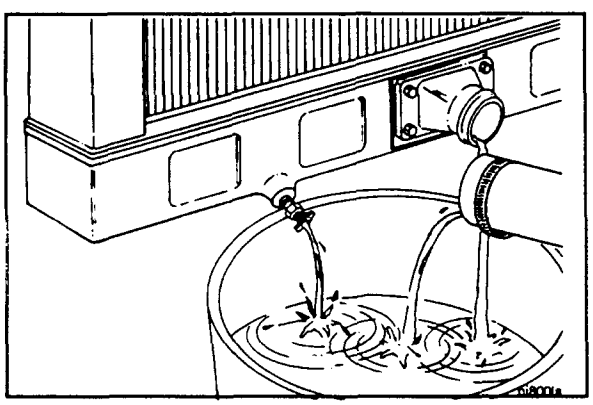

## Gear Cover (Two Piece) - Replace (07-42)

### Remove

**Note:** For instructions to replace the one piece design front cover, refer to procedure 07-39.

1. Open the draincock on the bottom of the radiator and remove the lower radiator hose to drain the cooling system.

2. Remove the fan. Refer to Procedure 01-22.

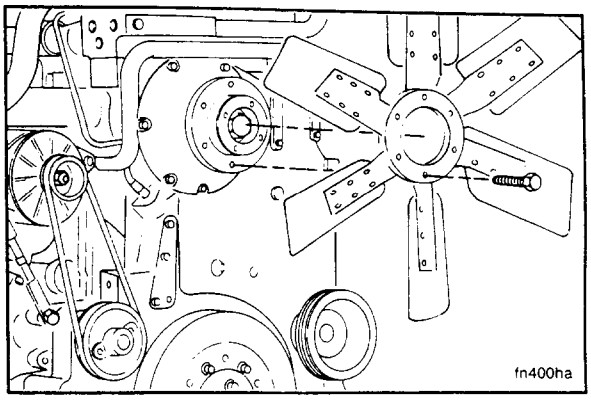


3. Remove the fan belt. Refer to Procedure 01-23.

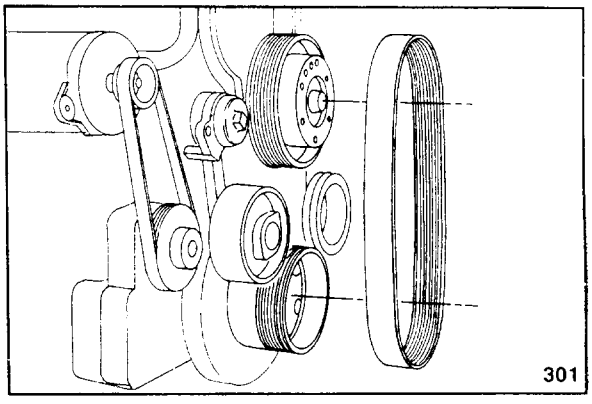


4. Loosen the adjusting link and the alternator mounting capscrews.

**Note:** The lower jam nut is left-hand threads.

5. Loosen both of the jam nuts. Turn the adjusting screw to relieve the belt tension.
6. Remove the alternator belt.

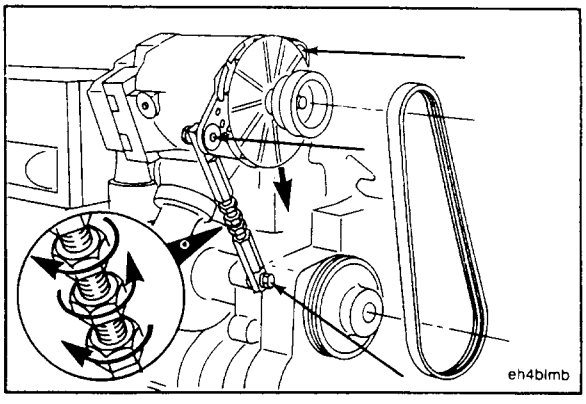


7. Remove gear driven fan hub.

**Caution: This assembly weighs more than 23 kg [50 lb]. Handle securely to prevent dropping.**

**Note:** Two of the capscrews contain a nut on the back side of the gear cover plate.

a. Remove the capscrews, nuts and fan hub. Remove and discard the gasket.

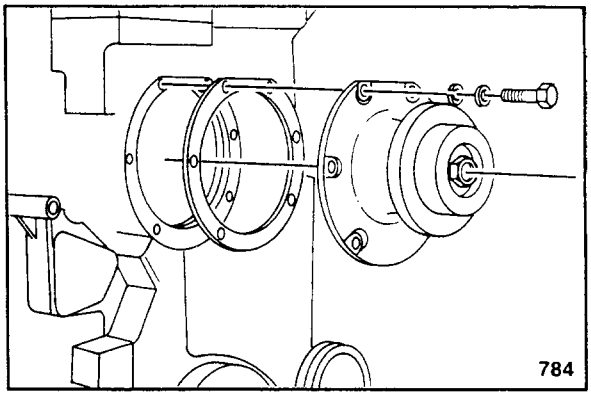

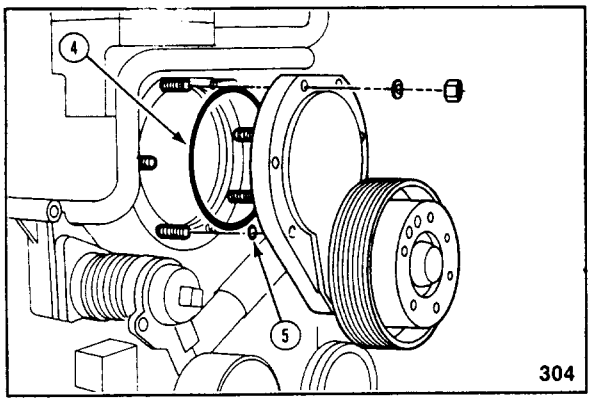


8. Remove belt driven fan hub.

**Caution: This assembly weighs more than 23 kg [50 lbs]. Handle securely to prevent dropping.**

a. Remove the seven nuts and the fan hub.

b. Remove the o-ring (4) and the seal (5). Discard the o-ring and seal.

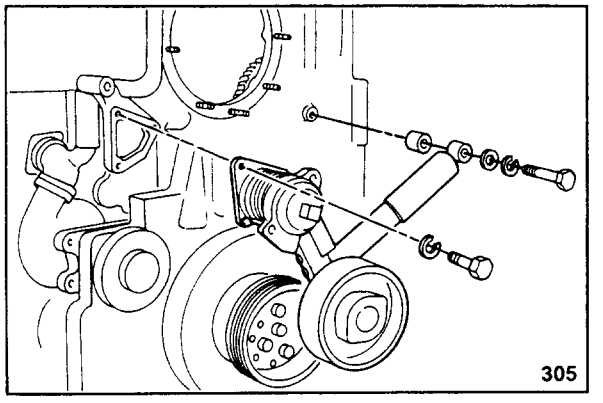


9. Remove fan idler.

**Caution: This assembly weighs more than 23 kg [50 lb]. The shock absorber and the pivot arm assembly will rotate during removal. Handle securely to prevent dropping.**

a. Remove the capscrew and spacer from the shock absorber. Remove the three capscrews from the pivot arm assembly.

b. Remove the pivot arm and the shock absorber as an assembly.

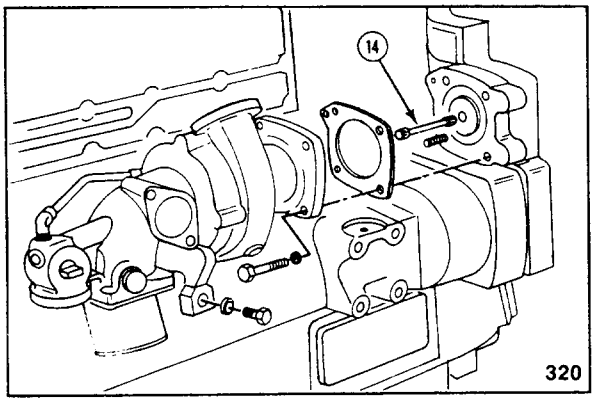


10. Remove the water pump. Refer to Procedure 01-30.

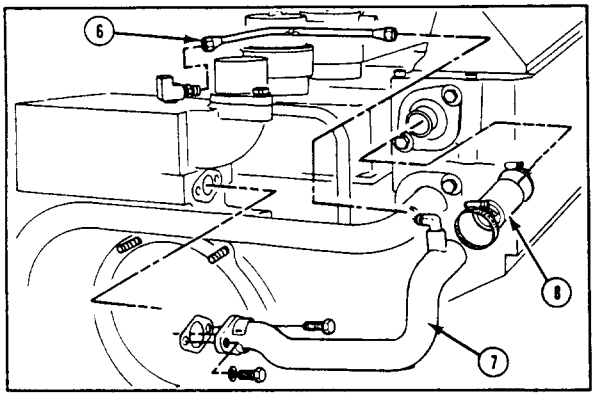


11. Remove the deaeration tube from the aftercooler outlet tube. Remove the aftercooler water outlet tube, hose and clamps.

12. Remove the aftercooler water inlet tube, hoses, and clamps.

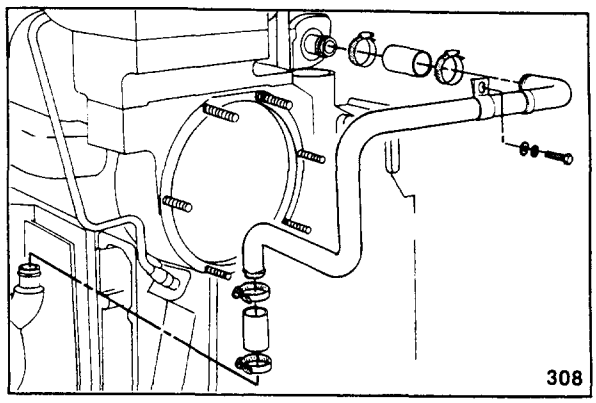


13. Remove the vibration damper.

**Caution: This assembly weighs more than 23 kg. [50 lbs]. Personal injury can result.**

a. Remove one capscrew and install a 3/4-16x5 inch guide stud (32).

**Caution: Do not pry or hammer on the vibration damper. Damage will result.**

b. Remove the remaining capscrews, damper and pulley. Remove the guide stud (32).

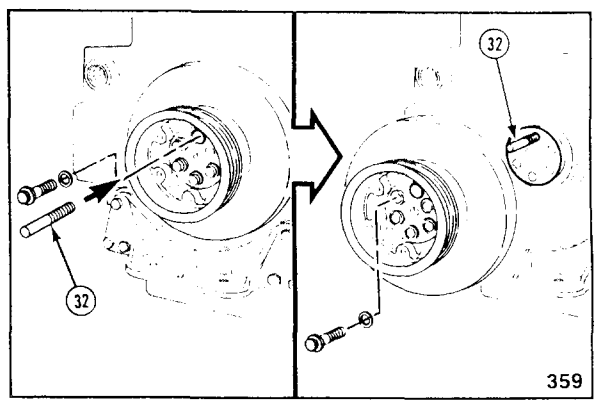


14. Remove the alternator drive pulley and water pump drive. Refer to Procedure 07-37.

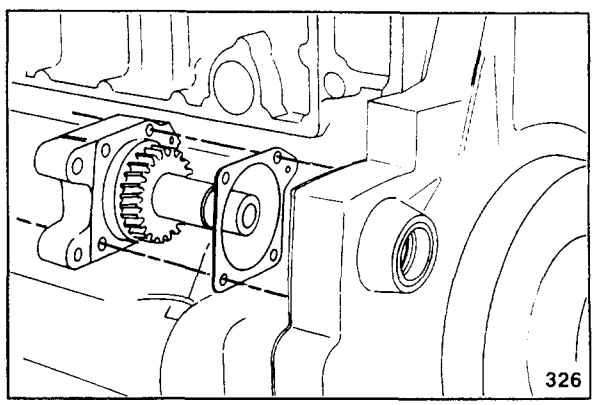


**Caution: Use a capscrew in the shaft to prevent damage to the shaft threads.**

15. Install a 7/16-20x1 inch capscrew in the shaft.

**Caution: Do not allow the puller (28) attachment capscrews to go through the pulley. Damage to the front cover will result.**

16. Use a standard puller, Part No. ST-647, or equivalent. Remove the accessory drive pulley.

Use brass drift and remove the woodruff key (29) from the shaft. Remove the capscrew (27) from the shaft.

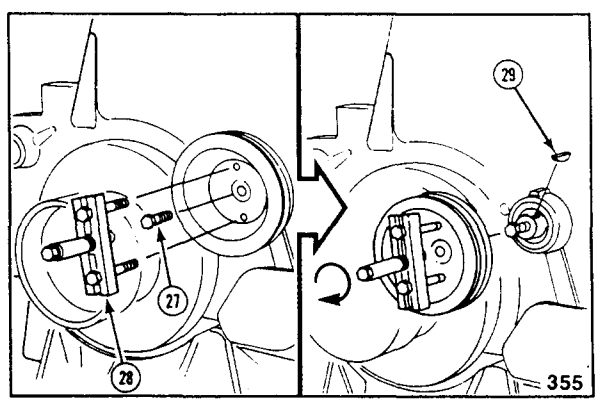

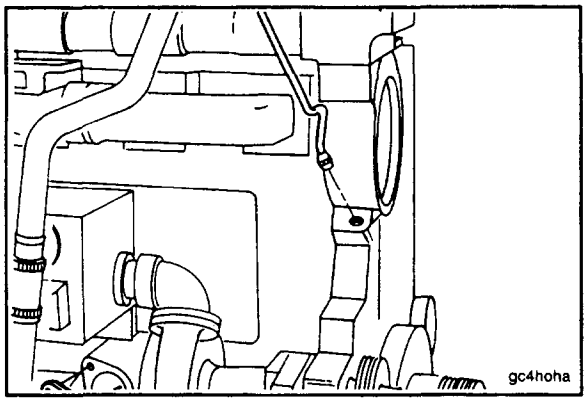


17. Disconnect the turbocharger oil supply line from the front cover.

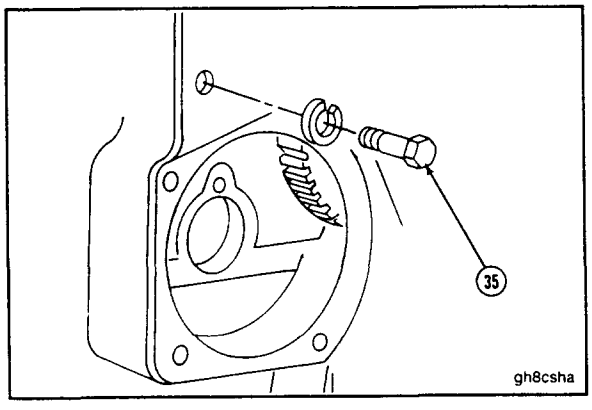


18. There is one capscrew (35) that must be removed from the back of the gear housing.

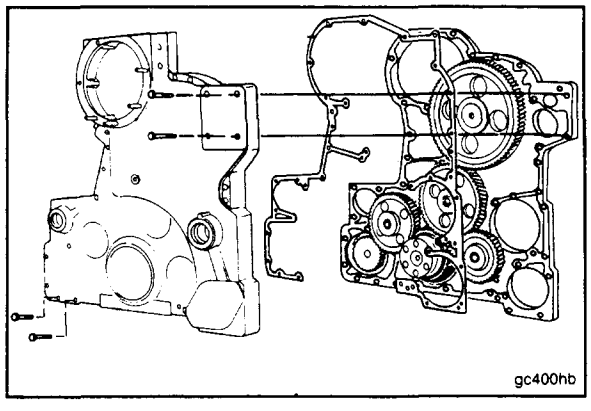


19. Remove the 18 capscrews from the cover. Remove the front cover.

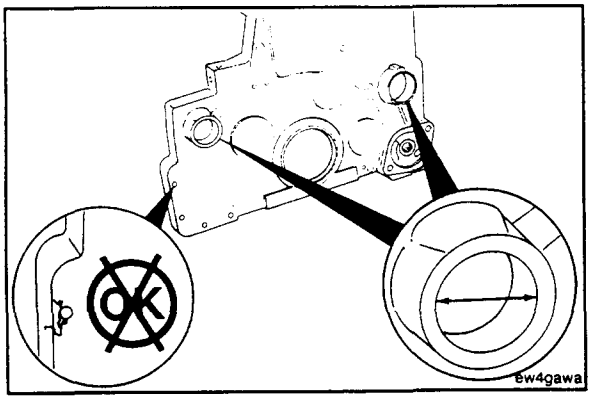


20. Use a mandrel or drift and remove the oil seals from the front cover.

## Check For Reuse

1. Clean and check the front cover for reuse. Measure the I.D. of the accessory drive and hydraulic pump drive bushings.

| Bushing I.D. | | |
|---|---|---|
| mm | | in |
| **Accessory Drive and Water Pump Drive (1)** | | |
| 39.75 | MIN | 1.565 |
| 39.90 | MAX | 1.571 |
| **Hydraulic Pump Drive (2)** | | |
| 38.13 | MIN | 1.501 |
| 38.25 | MAX | 1.506 |

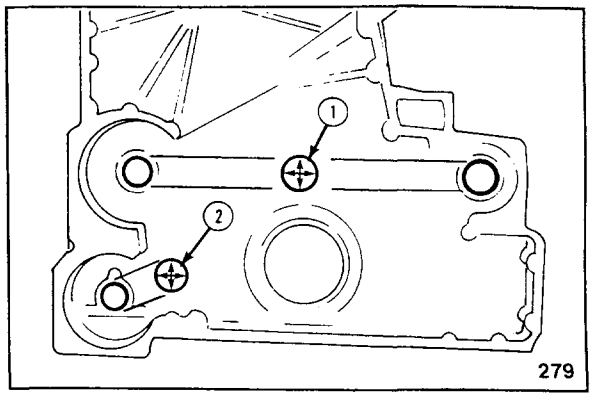


## Install

The common capscrew lengths for all cast iron (marine) two-piece front gear covers are given in this illustration.

The capscrew lengths for the holes (1 through **9**) depend on the heat exchanger (HX in the following table) and the front power take-off (FPTO in the following table) options.

**NOTE:** All capscrews are given in U.S. customary inches. All capscrews are 3/8 x 16 UNC.

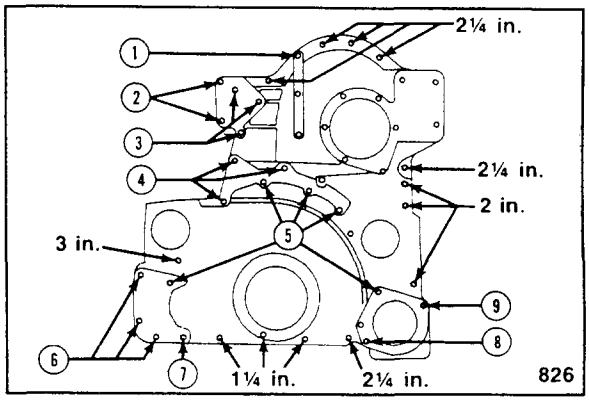


| HX:<br>FPTO: | No<br>Yes | Yes<br>No | No<br>No | Yes<br>Yes |
|---|---|---|---|---|
| (1) | 3 | 3 1/2 | 2 | 3 1/2 |
| (2) | 3 | 3 1/2 | 3 | 3 1/2 |
| (3) | 3 3/4 | 4 1/4 | 4 | 4 1/2 |
| (4) | 4 1/2 | 3 3/4 | 4 | 4 1/2 |
| (5) | 1 1/4 | None | None | 1 1/4 |
| (6) | 4 1/2 | 3 3/4 | 4 | 4 1/2 |
| (7) | 7 1/8 | 3 3/4 | 4 | 7 1/8 |
| (8) | 4 1/2 | None | None | 4 1/2 |
| (9) | 1 3/4 | None | None | 1 3/4 |

This illustration shows the capscrew length requirements for the aluminum two-piece front cover.

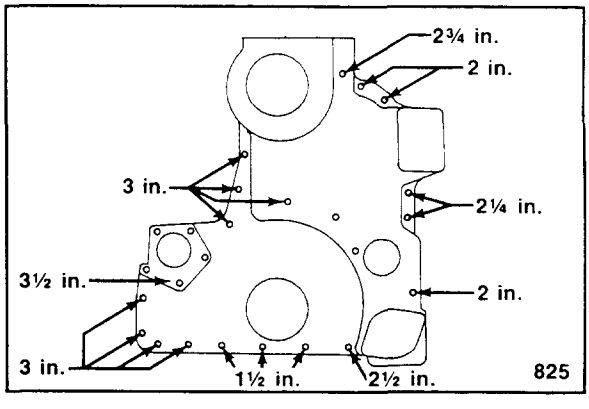

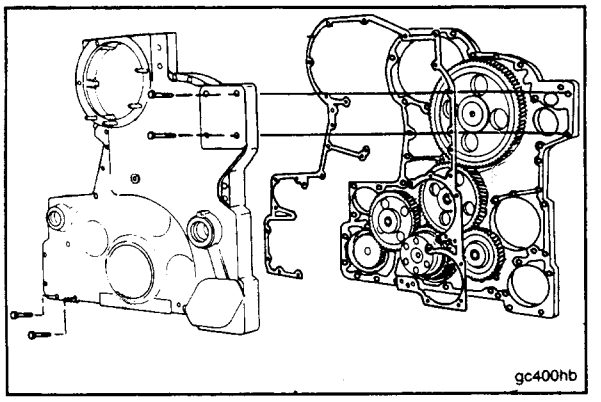


1. Install the guide studs. Install the gasket, front cover, and capscrews.

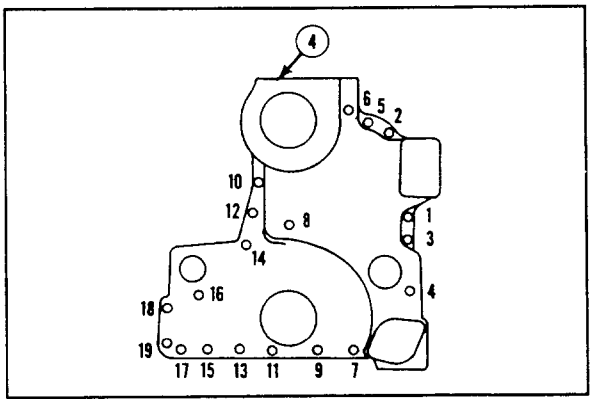


**Note:** Sequence No. 4 capscrew is located at the rear of the gear housing.

2. Tighten the capscrews in the sequence shown. Tighten the capscrews to 45 N•m [35 ft-lb].

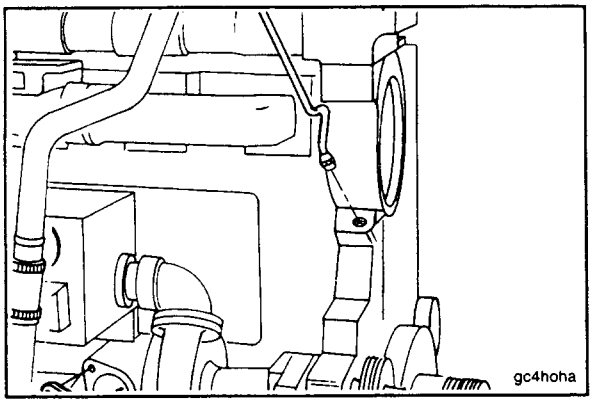


3. Connect the turbocharger oil supply line to the fitting on the front cover.

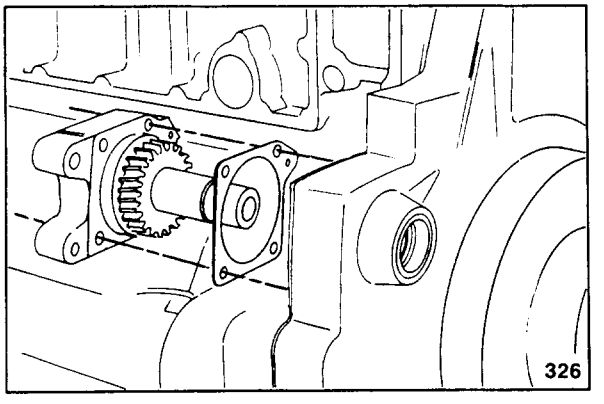


4. Install the water pump drive assembly and the alternator drive pulley. Refer to Procedure 07-37.

5. Install the front crankshaft seal. Refer to Procedure 07-36.

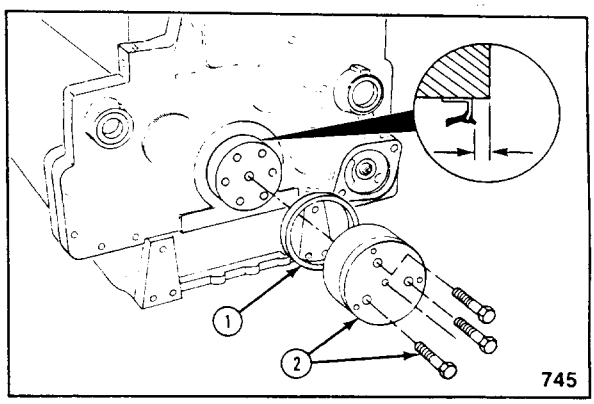


6. Install the vibration damper and fan drive pulley. Refer to Procedure 07-33.

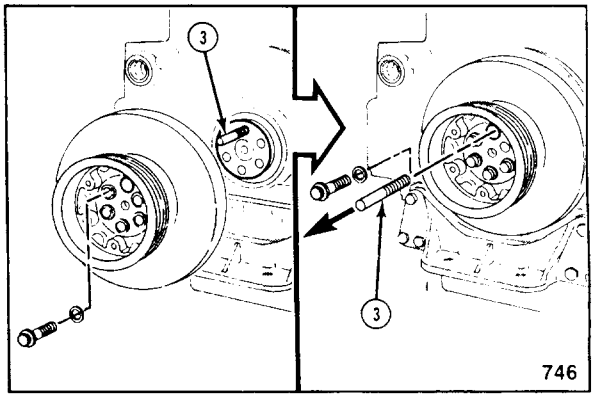


7. Install the water pump. Refer to Procedure 01-30.

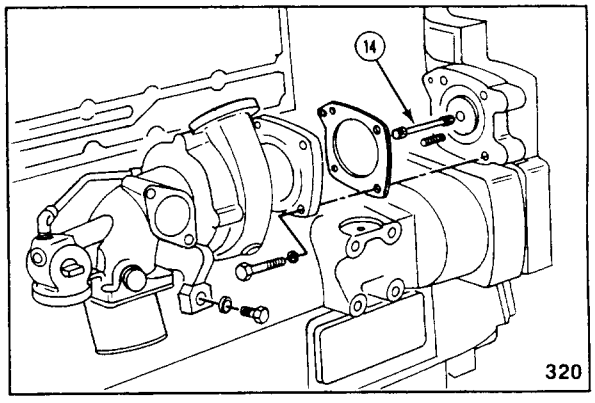


8. Install the aftercooler water inlet tube, hoses, and clamps. Tighten the capscrews to 45 N•m [35 ft-lb]. Tighten the clamps to 5.6 N•m [50 in-lb].

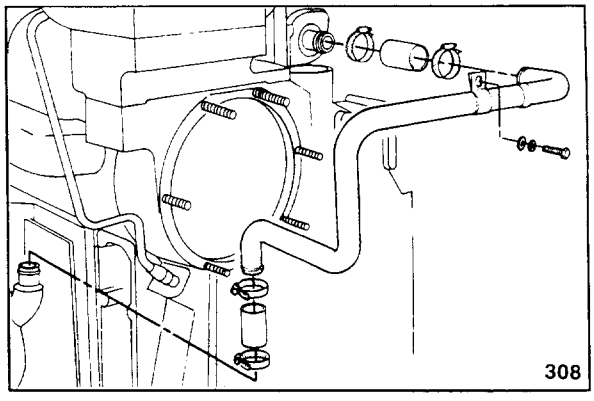

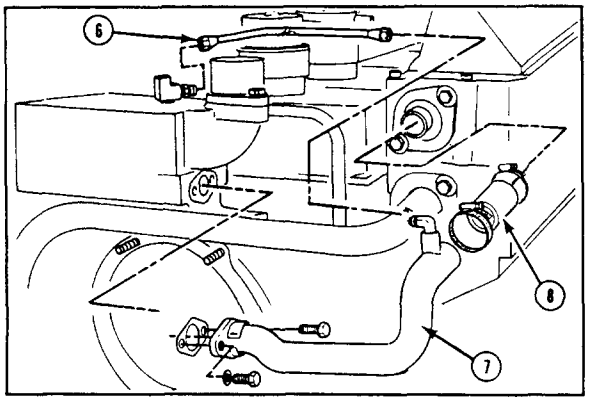


9. Install the aftercooler water outlet tube, hose, and clamps. Tighten the capscrews to 45 N•m [35 ft-lb]. Tighten the clamps to 5.6 N•m [50 in-lb].

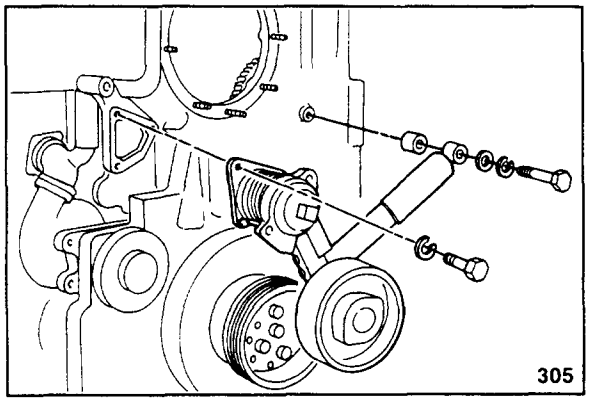


10. Install the fan hub idler assembly. Refer to Procedure 01-28.

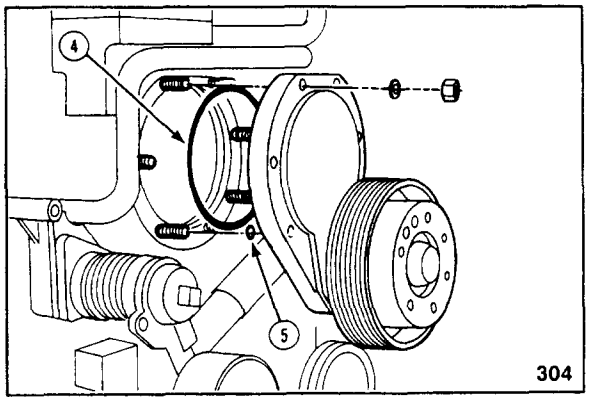


11. Install the belt driven fan hub. Refer to Procedure 01-26.

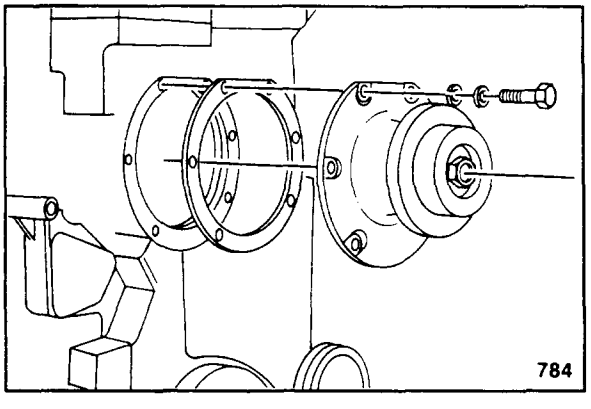


12. Install the gear driven fan hub. Refer to Procedure 01-27.

13. Install the alternator belt. Refer to Procedure 06-07.

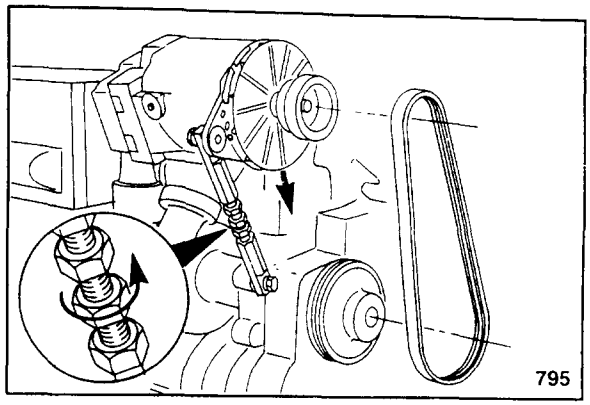


14. Install the fan belt. Refer to Procedure 01-23.

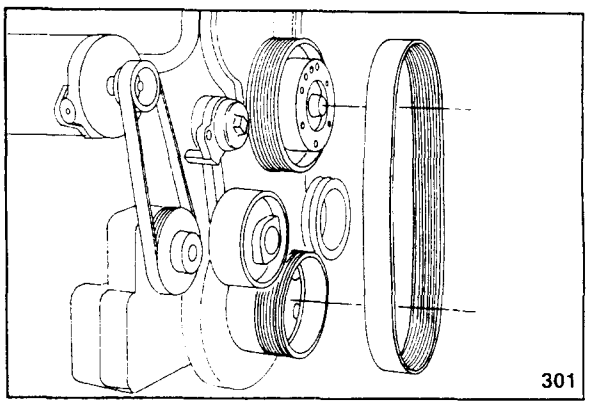


15. Install the fan. Tighten the capscrews to 135 N•m [100 ft-lb].

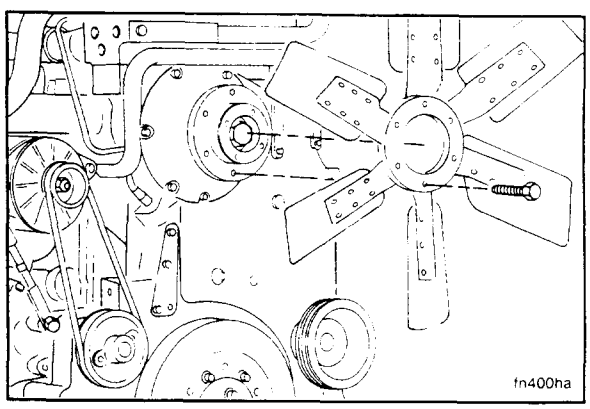


16. Install new full flow oil filters. Refer to Procedure 02-11.

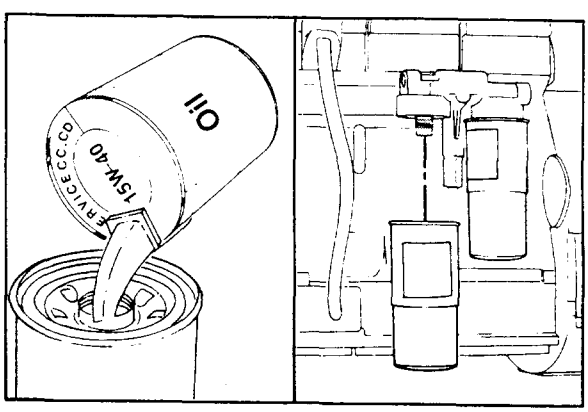

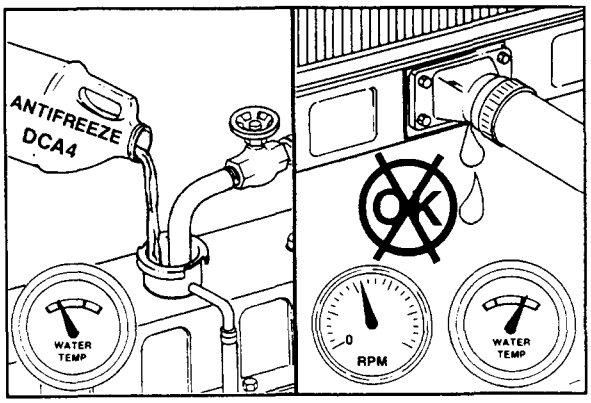


17. Fill the cooling system. Refer to Procedure 01-07.
18. Operate the engine to 70°C [160°F] coolant temperature and check for leaks.

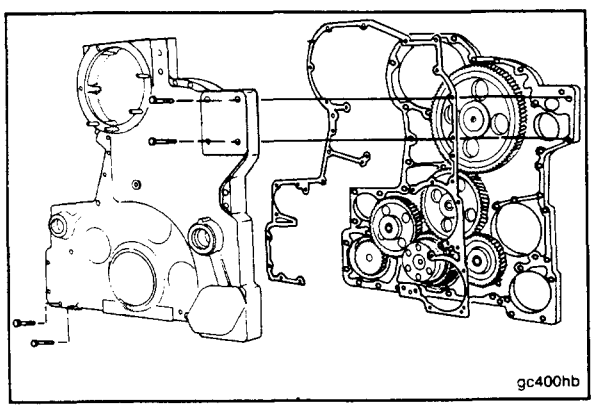


## Gear Housing (Two Piece Design) - Replace (07-43)

### Remove

1. Remove the gear cover and all related parts. Refer to Procedure 07-42.

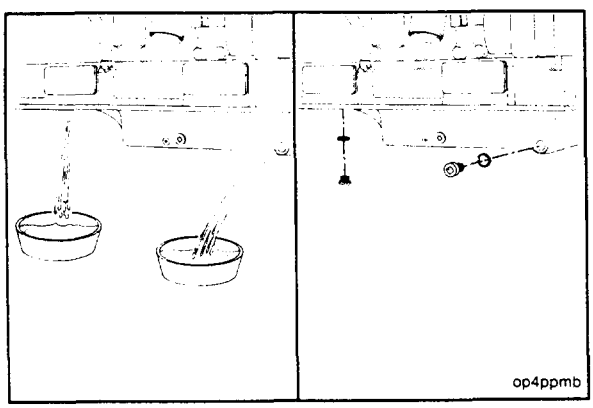


**Warning: Hot oil can cause serious personal injury.**

**Note:** Drain the oil when the oil temperature is approximately 60°C [140°F].

2. Remove the oil drain plug and copper washers from the bottom of the oil sump and the oil pan adapter cover plate.
3. Drain the oil. Replace the washers and plugs. Tighten the drain plugs to 100 N•m [75 ft-lb].

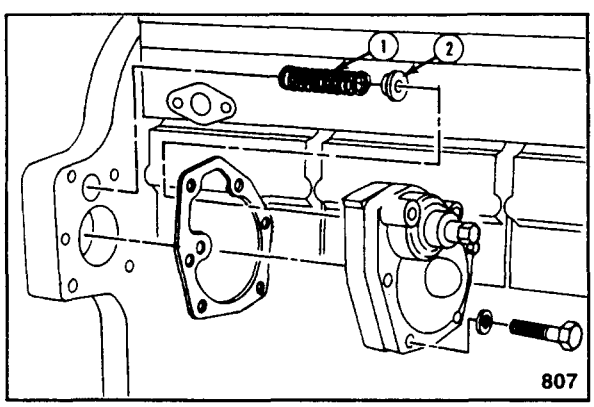


4. Remove the five mounting capscrews and the barring mechanism. Remove and discard the gasket.

   Remove the spring guide (2) and the spring (1).

5. Remove the fuel pump. Refer to Procedure 05-11.

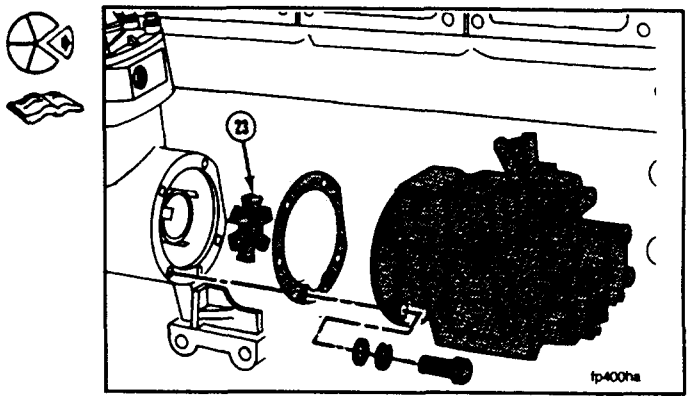


6. Remove the air compressor. Refer to Procedure 04-15 (Single Cylinder) or 04-16 (Two Cylinder).

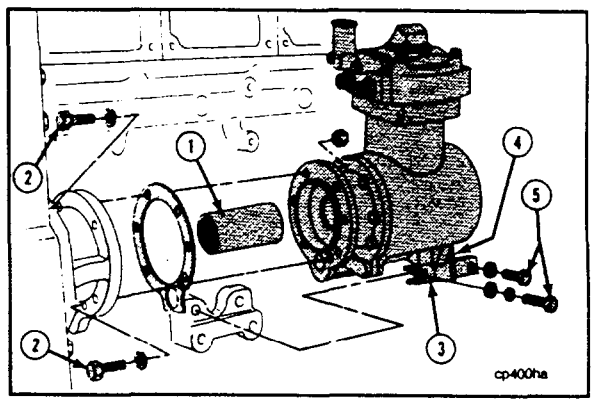


7. Remove the accessory drive pulley and assembly. Refer to Procedure 07-31.

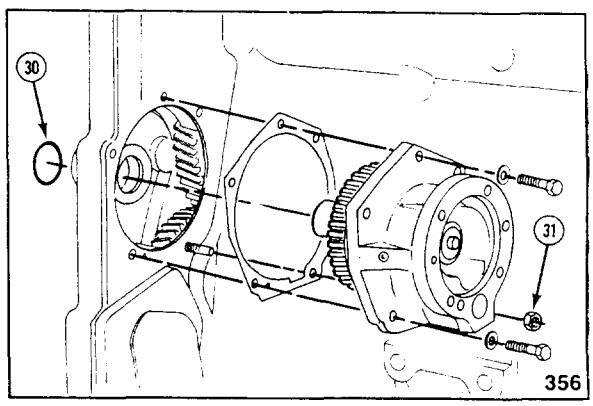


**Note:** Some engines contain a cover plate insted of a hydraulic pump drive assembly.

8. Remove the four capscrews, and the pump drive assembly. Remove and discard the gasket and o-ring.

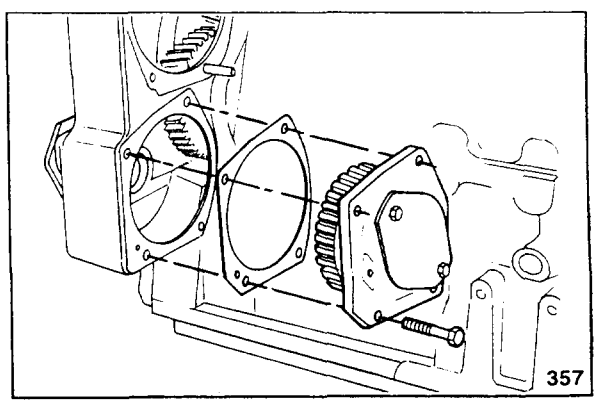

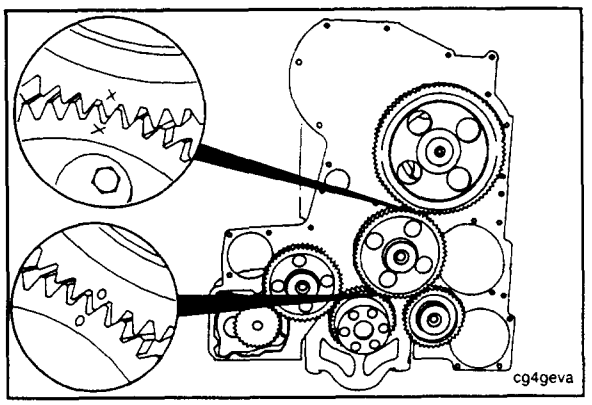


9. Bar the engine by turning the crankshaft until the index marks on the camshaft gear and the crankshaft gear are in alignment.

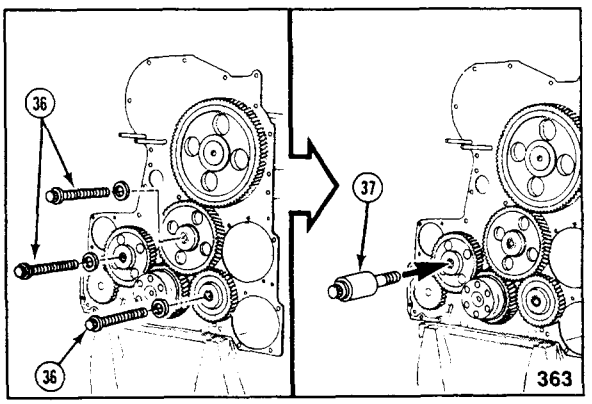


10. Remove the idler gear (Bolt-in design).

**Note:** The bolt-in idler shaft has a flange that requires the shaft, the idler gear, and the thrust washers to be removed as an assembly.

a. Remove the three capscrews from the idler gears.

b. Use an old piston pin and a K19 cylinder head capscrew as a slide hammer (37). Put the capscrew in the shaft.

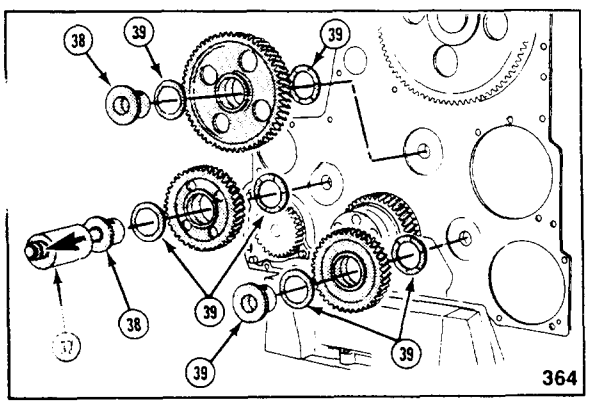


c. Use the slide hammer to remove the shaft (38), the two thrust washers (39), and the gear. Remove the items as an assembly.

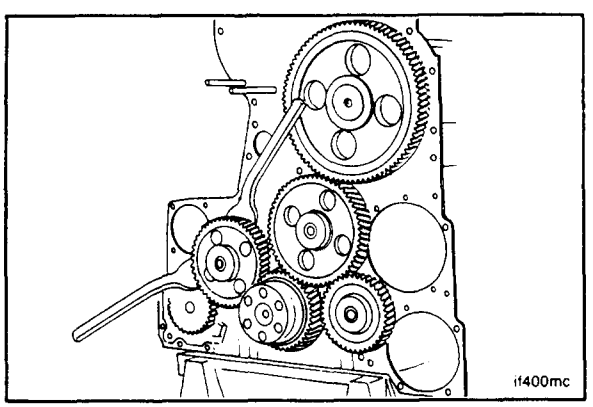


**Note:** Newer engines do not have threads in the shaft. To remove the gear assembly, use two pry bars and pry the gear and shaft from the block.

11. Remove idler gear (Press fit design).

**Note:** Some engines have press fit design idler shafts that do not have to be removed from the block to remove the idler gears.

a. Remove the capscrew, washers, gear, and the thrust washers.

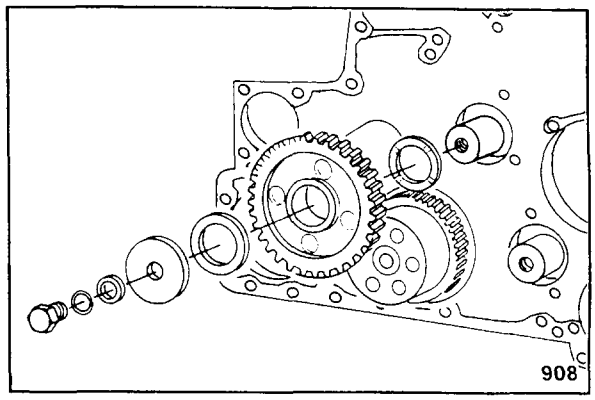


12. Remove the camshaft gear. Refer to Procedure 07-40.

**Note:** If the service tool is not available, remove the camshaft. Refer to Procedure 07-48.

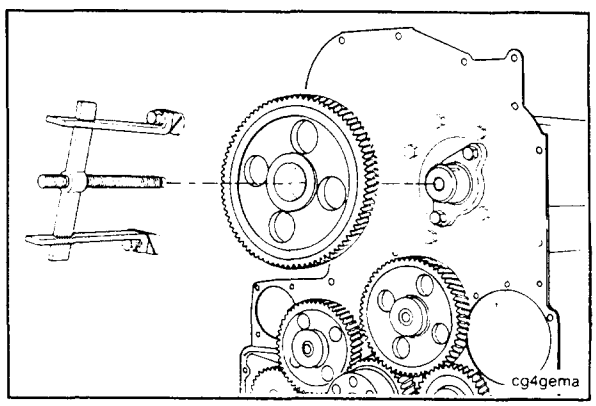


13. Remove the oil sump or adapter cover plate (whichever is in the front location).

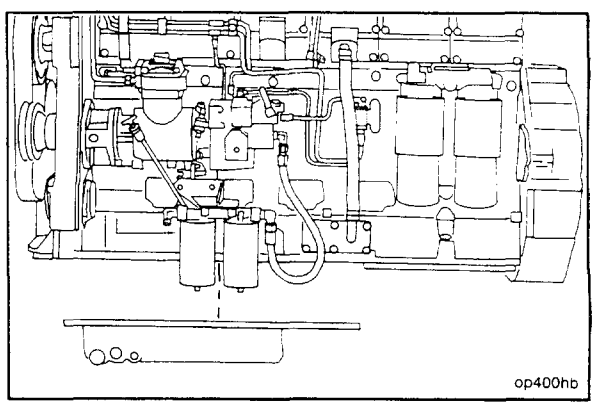


14. Remove the five capscrews that attach to the bottom of the gear housing.

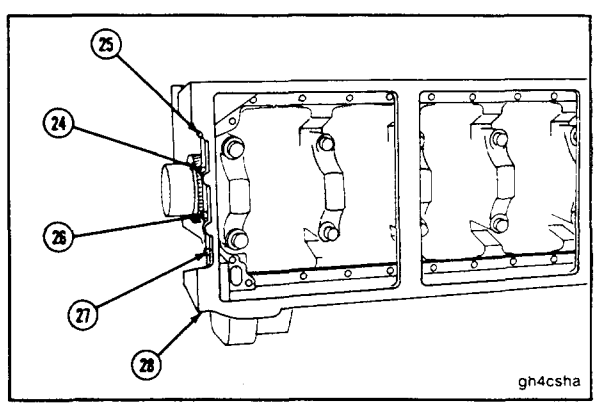

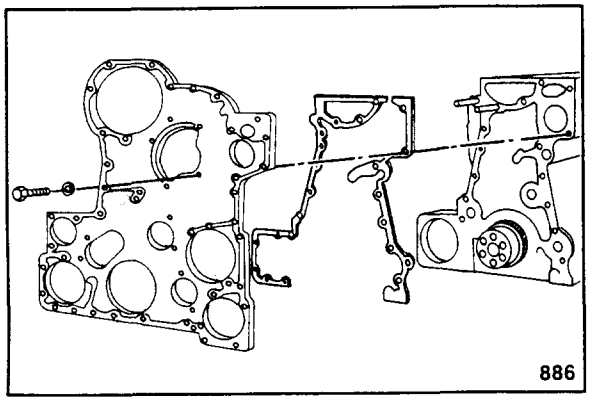


15. Remove the 11 mounting capscrews and the gear housing. Remove and discard the gasket.

**Note:** Tag the special mounting capscrews for future identification.

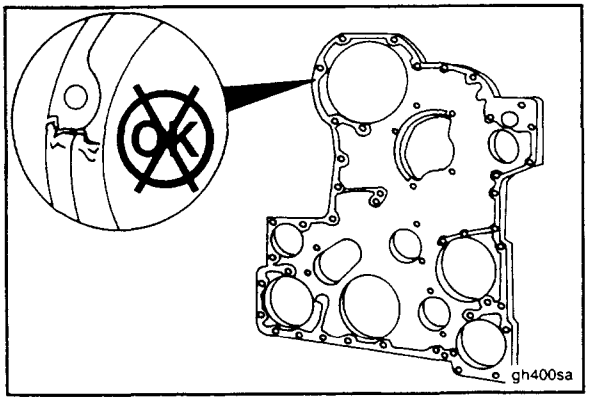


## Check For Reuse

1. Clean and check the gear housing for reuse. Check for fretting damage on the gasket surfaces (both sides). Check for cracks.

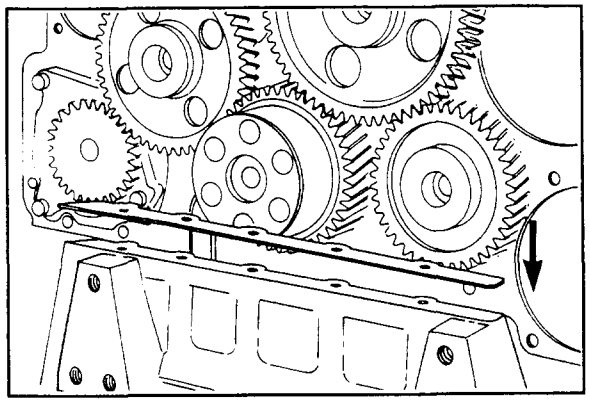

## Install

1. Install the service gasket piece on top of the oil pan adapter. Use a spray adhesive to hold it in position. Use Cummins sealant, Part No. 3377132, at the joints.

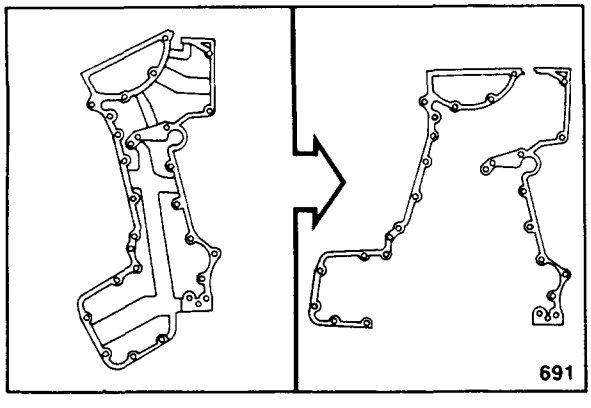


2. Separate the gasket as shown. Discard the center tab sections.

3. If the engine has a belt driven fan hub, install the two studs (12) and (13). The length of the stud (12) is 140 mm [5.5 inch]. The length of the stud (13) is 152 mm [6 inch].
4. The diamond dowel (15) must be installed with the flat surface turned towards the master dowel hole at the lower right hand corner of the block. Guide studs (14) will help during installation.

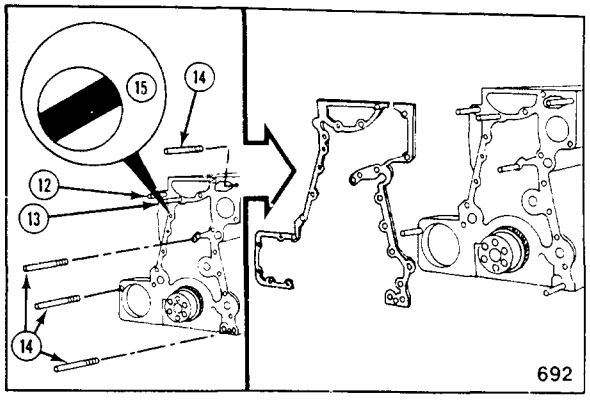


**Caution: Do not use gasket cement. Damage to the gasket will result.**

**Note:** This gasket is used on old and new style blocks. When used on the old block, there will be a capscrew hole (16) that is not used. It is not necessary to trim the gasket at this location.

5. Use Cummins sealant, Part No. 3377132, or equivalent. Apply a small amount to both sides of the gasket at the butt joint. Install the gasket.

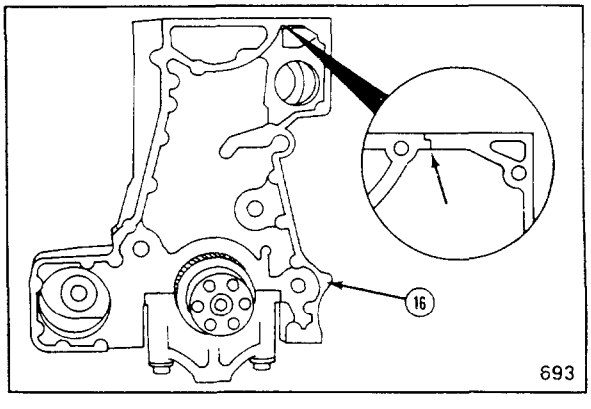


**Caution: Special capscrews are required to attach the gear housing. The capscrews have a captive, cone-shaped washer to maintain torque.**

The capscrews for the gear housing are 1 1/8 inch.

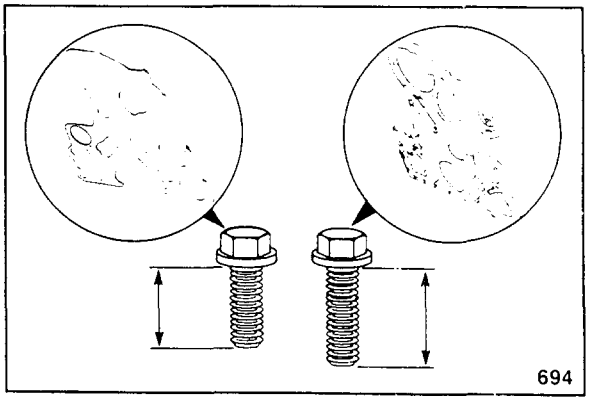


6. Install the gear housing and the 11 capscrews as shown. Remove the guide studs.

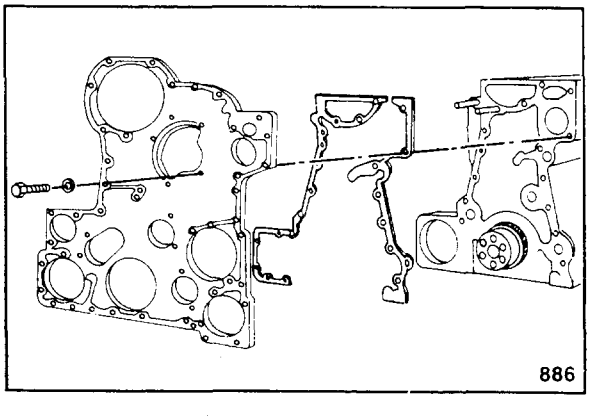

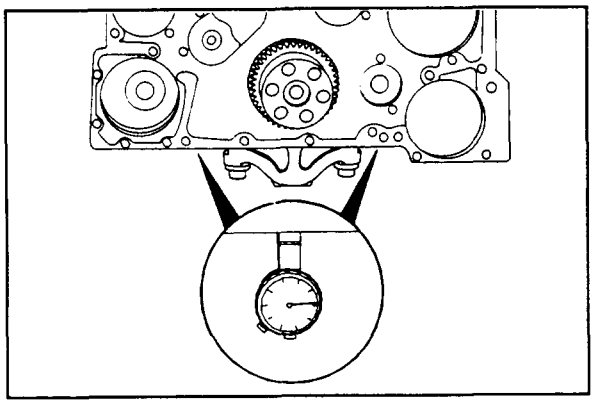

**Note:** If the oil pan adapter is removed, gear housing alignment must be checked. If the oil pan adapter is installed, alignment does not require checking.

7. Use a gauge block, Part No. ST-547, or equivalent, and measure the distance from the bottom of the block to the bottom of the housing.

   The bottom of the housing must be within 0.05 mm [0.002 inch] of the bottom of the block.

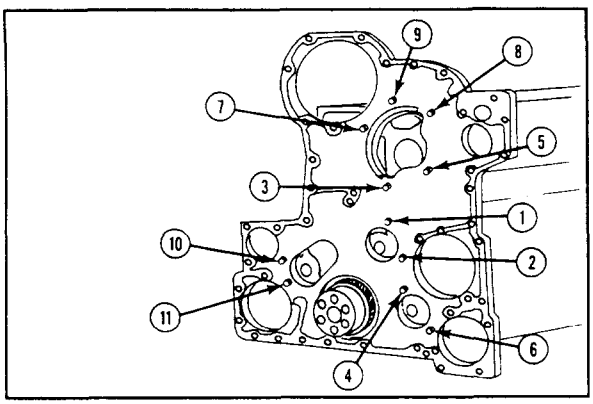


8. Align the housing with the bottom of the block if necessary.
9. Use the sequence shown and tighten the capscrews to 45 N•m [35 ft-lb].

   Measure the housing to block alignment again to be sure it is within specifications.

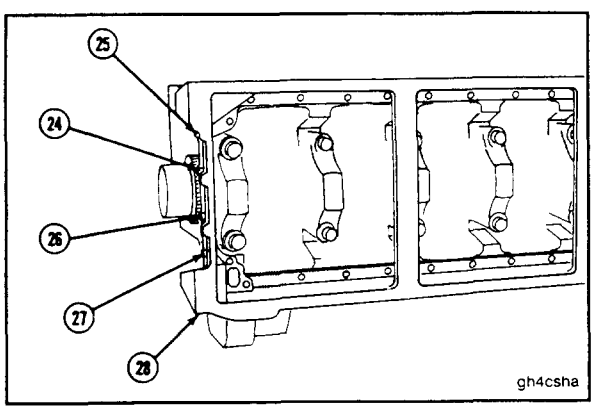


**Note:** Capscrew No. 24 through 28 thread into the gear housing.

10. Install the remaining 3/8 inch washers and capscrews. Tighten the capscrews to 45 N•m [35 ft-lb].

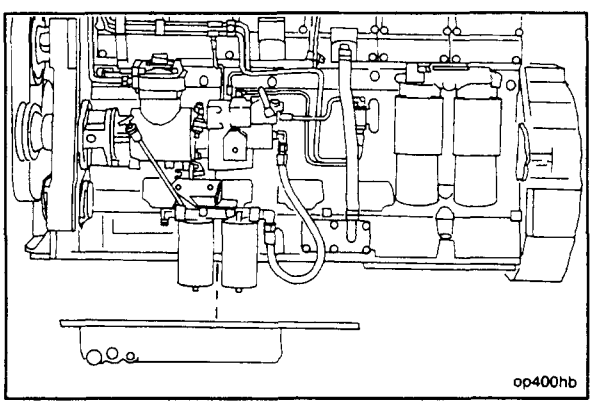


11. Install the oil sump or adapter cover plate. Refer to Procedure 02-16.

12. Install the camshaft gear. Refer to Procedure 07-40.

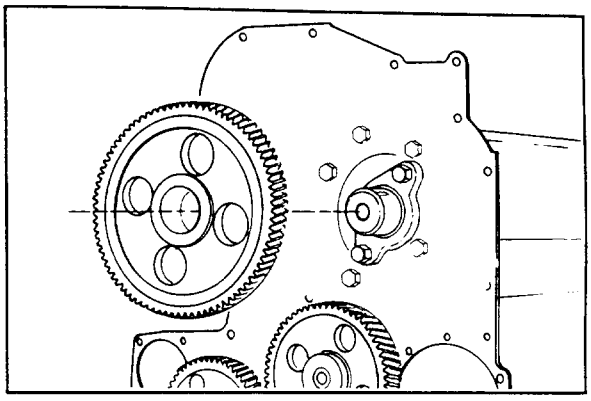

**Caution: Engines that contain a hydraulic pump must have the oil holes in the hydraulic pump idler shaft as shown. Idler gear bushing failure will result if the oil holes are not aligned correctly.**

13. Mark the flange to show oil hole orientation.

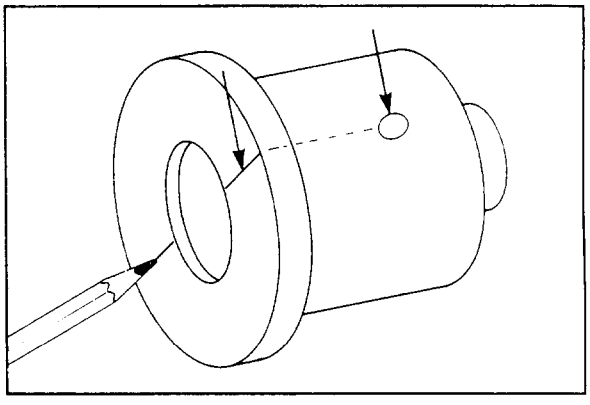

14. Install the bolt-in design idler gears.

**Caution: The grooves in the thrust washers must be turned towards the gear.**

**Caution: The timing marks on the camshaft idler gear must be visible when the gear is installed.**

a. Lubricate the gear bushing, shaft, and the thrust washer with Lubriplate No. 105, or equivalent.

b. Lubricate the capscrew with engine oil. Assembly the parts as shown.

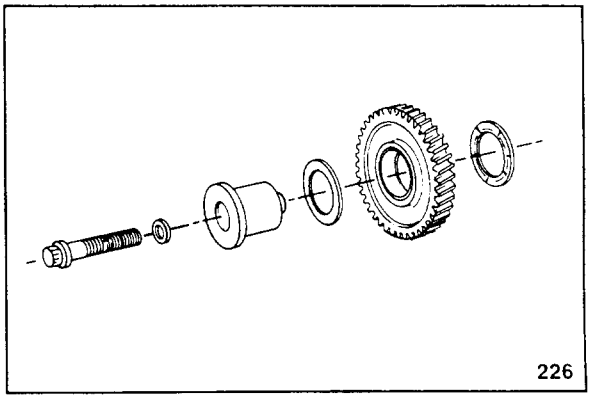


c. Install the oil pump/water pump idler gear. Start the capscrew in the threads in the block.

**Caution: Do not allow the inner thrust washer to fall between the shaft and the block.**

d. Use the capscrew to pull the shaft into the bore. Tighten the capscrews to 245 N•m [180 ft-lb].

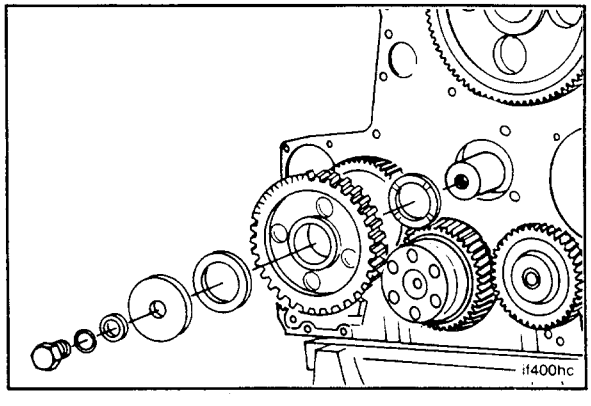

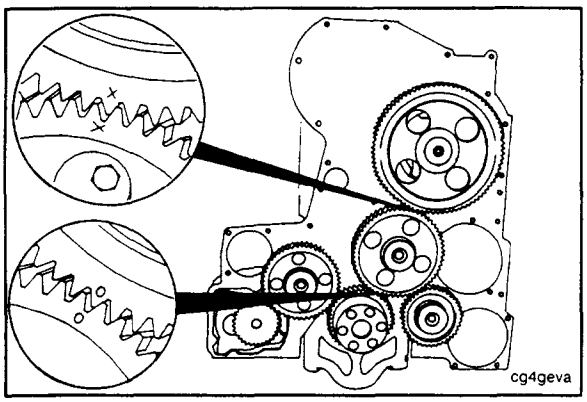


**Note:** The camshaft idler gear is the only idler gear that has timing marks.

e. Align the "ZERO" on the idler gear with the "ZERO" on the crankshaft gear. Align the "X" on the camshaft gear with the "X" on the idler gear.

f. Use the capscrew to pull the shaft into the bore. Tighten the capscrews to 245 N•m [180 ft-lb].

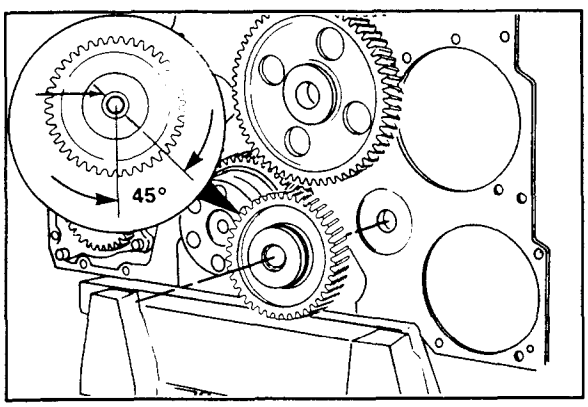


**Caution: Engines that contain a hydraulic pump must have the oil holes in the hydraulic pump idler shaft oriented as shown. Idler gear bushing failure will result if the oil holes are not aligned correctly.**

g. Align the oil holes in the shaft to an angle 45° to the left of vertical.

h. Use the capscrew to pull the shaft into the bore. Tighten the capscrew to 245 N•m [180 ft-lb].

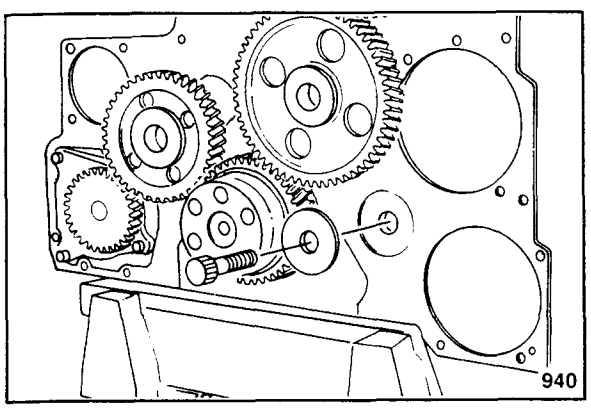


**Caution: Engines that do not have a hydraulic pump drive must have a plug installed in place of the idler shaft. Low oil pressure will result if the plug is omitted.**

**Caution: The capscrew that is used for the plug must not protrude beyond the block.**

i. Use a 9/16-UNF-inch capscrew, lock washer, and a plain washer that is larger than the block bore. Tighten the capscrews to 65 N•m [50 ft-lb].

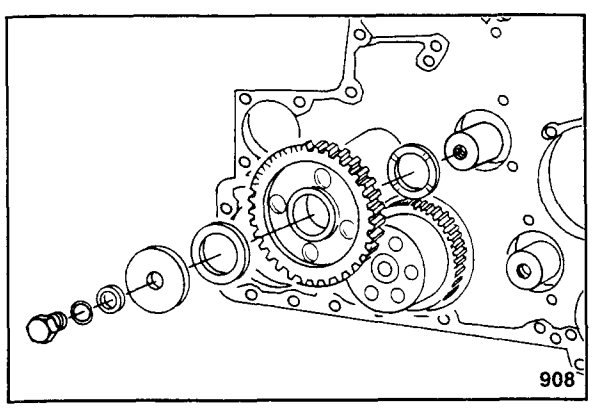


15. Install the press-in idler gears.

**Caution: The grooves in the thrust washers must be turned towards the gear.**

a. Lubricate the gear bushing, shaft, and the thrust washer with Lubriplate No. 105, or equivalent.

b. Lubricate the capscrew with engine oil. Assemble the parts as shown. Tighten the capscrews to 45 N•m [35 ft-lb].

c. Use a dial indicator and measure the idler gear end clearance.

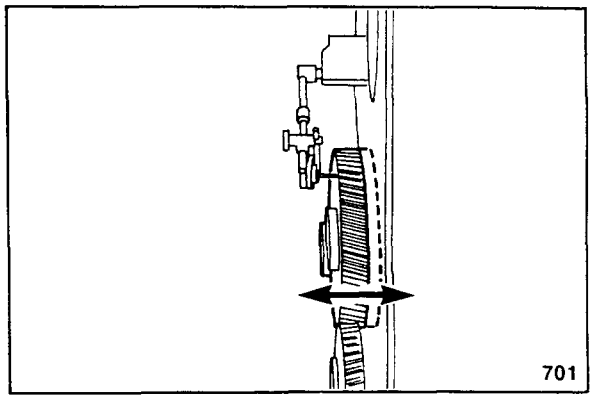


| Idler Gear End Clearance | | |
|---|---|---|
| mm | | in |
| 0.10 | MIN | 0.004 |
| 0.36 | MAX | 0.014 |

**Note:** If the clearance is not within specifications, check for foreign material between the parts or check for proper location of the thrust washers. Oversize thrust washers are available.

16. If the camshaft gear was replaced check the injection timing. Machine tolerances can cause the timing to be out of specifications. Refer to Procedure 07-20.

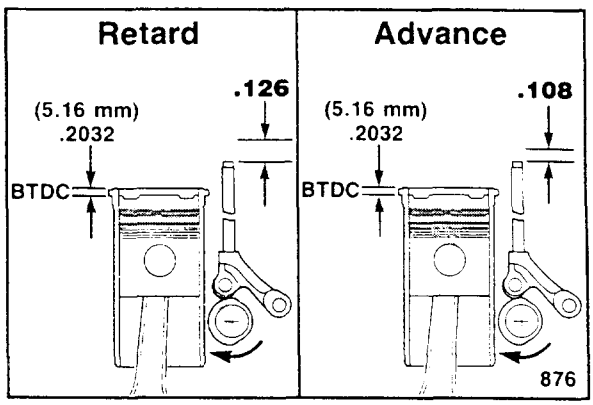


17. Lubricate the bushing in the cover with engine oil. Install the gasket, drive or cover, o-ring, washers, and capscrews. Tighten the capscrews to 45 N•m [35 ft-lb].

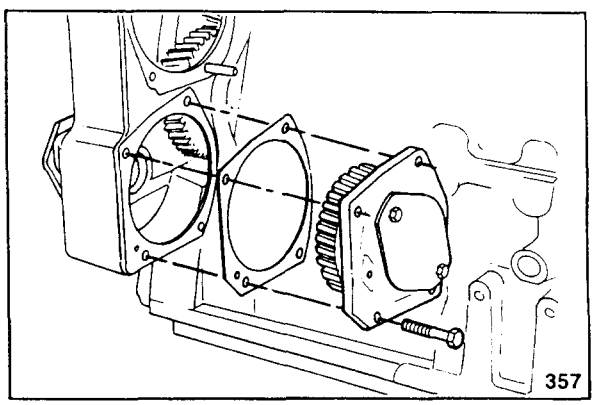


18. Install the accessory drive assembly and pulley. Refer to Procedure 07-31.

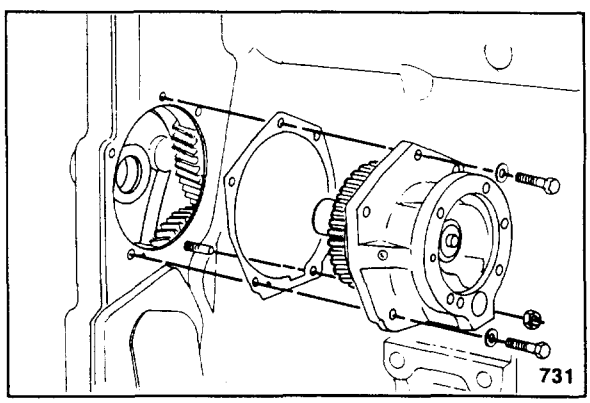

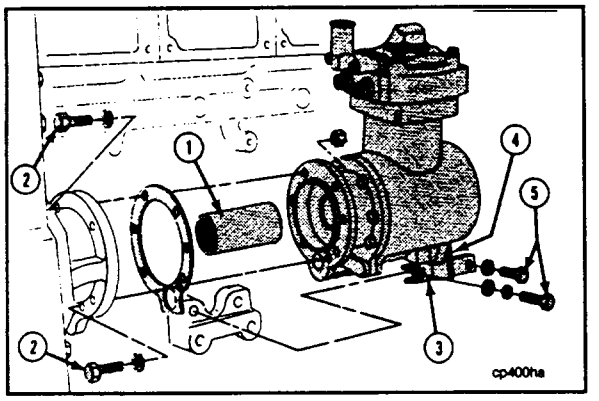


19. Install the air compressor. Refer to Procedure 04-15 (Single cylinder) or 04-16 (Two cylinder).

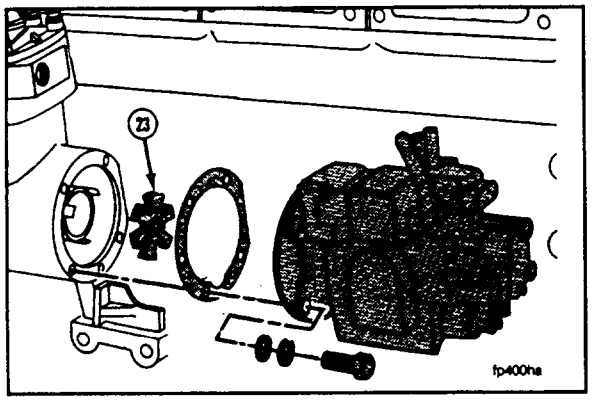


20. Install the fuel pump. Refer to Procedure 05-11.

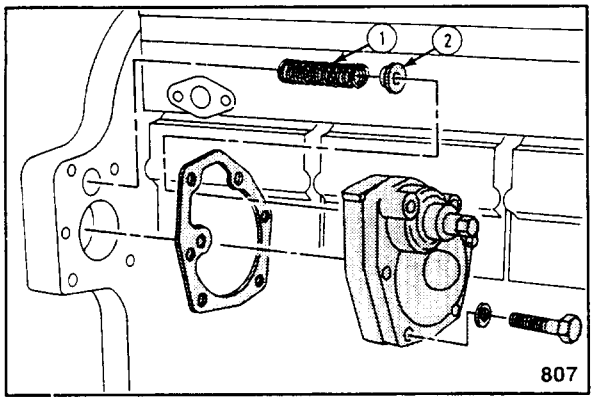


21. Install the spring (1) and the retainer (2). Install the gasket, barring mechanism, washers, and capscrews. Tighten the capscrews to 45 N•m [35 ft-lb].

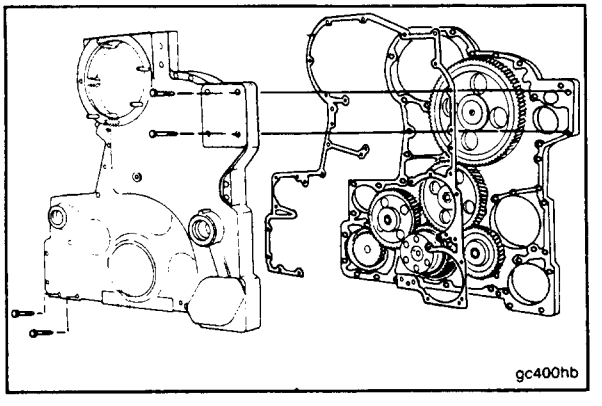


22. Install the the front gear cover and all related components. Refer to Procedure 07-42.

23. Install new full flow oil filters. Refer to Procedure 02-11.

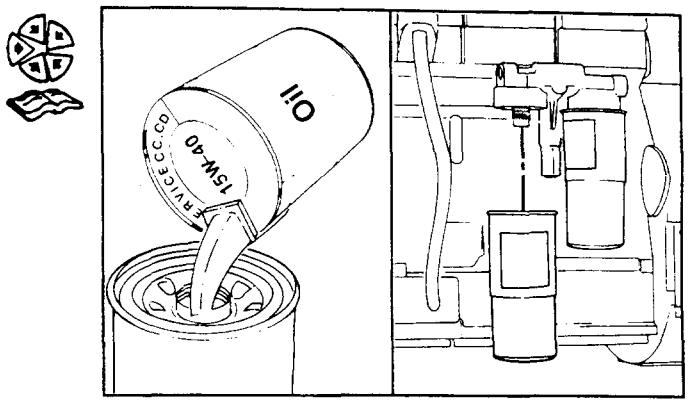


24. Fill the engine with coolant. Refer to Procedure 01-07.

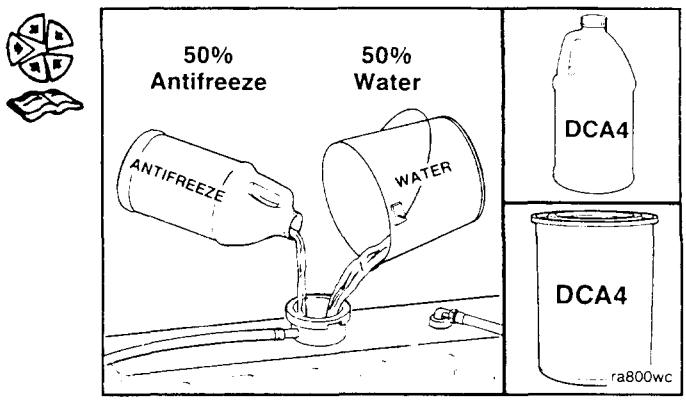


25. Fill the engine with clean 15W-40 oil. Refer to Procedure 02-10 for engine oil capacity.
26. Operate the engine to 70°C [160°F] coolant temperature and check for leaks.

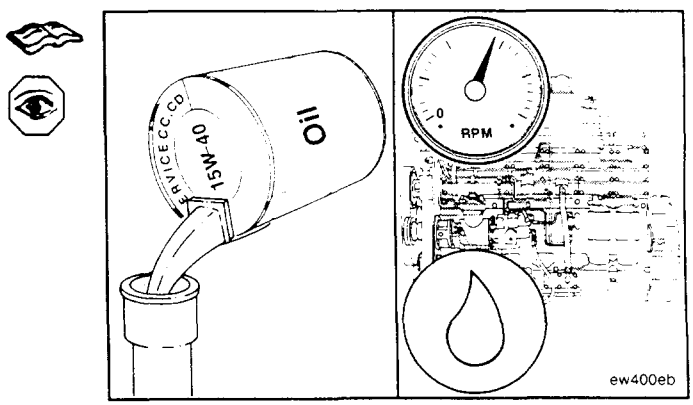

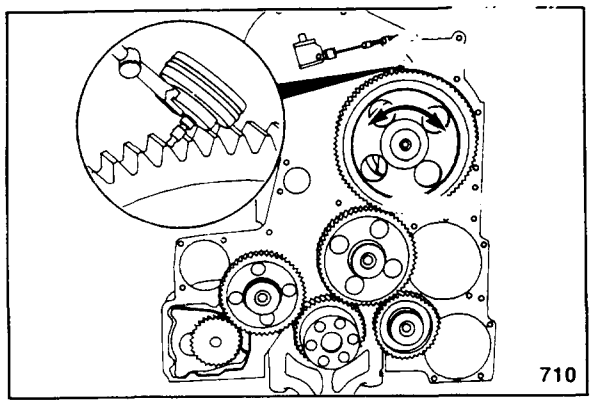


## Check Gear Train Backlash (07-44)

**Note:** This check must be performed after the gear cover is removed. If the cover is not already removed, refer to Procedure 07-39.

1. Position a dial indicator so the tip is contacting the face of the gear tooth (as shown).
2. Hold the mating gear so it cannot turn.
3. Rotate the gear being measured clockwise. Position the indicator to "ZERO". Now rotate the gear counterclockwise, and read the indicator.

| Gear Train Backlash | | |
|---|---|---|
| mm | | in |
| .07 | MIN | .003 |
| .30 | MAX | .012 |

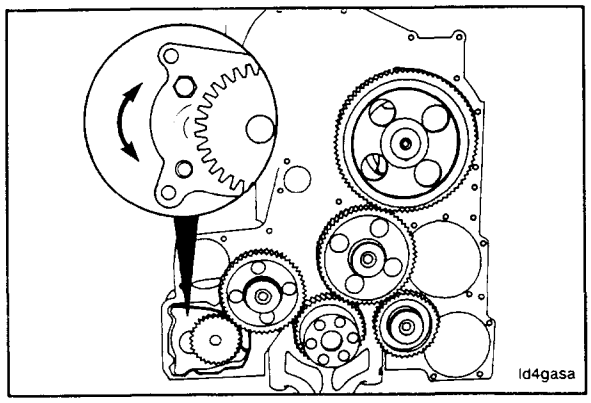


4. The backlash on the oil pump can be adjusted by rotating the pump body.

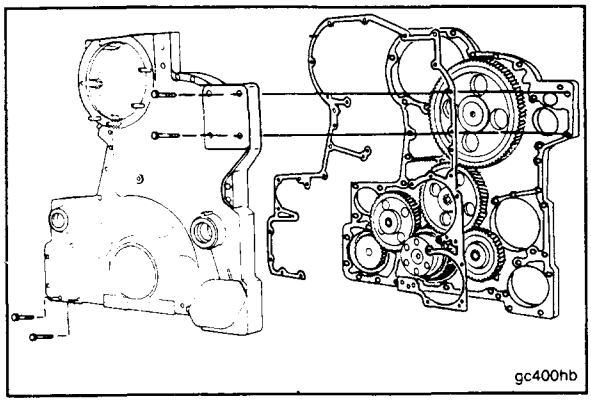


## Idler Shaft (Press-in) - Replace (07-45)

### Remove

1. Remove the gear cover. Refer to Procedure 07-42.

2. Remove the capscrew, washers, gear, and thrust washer.

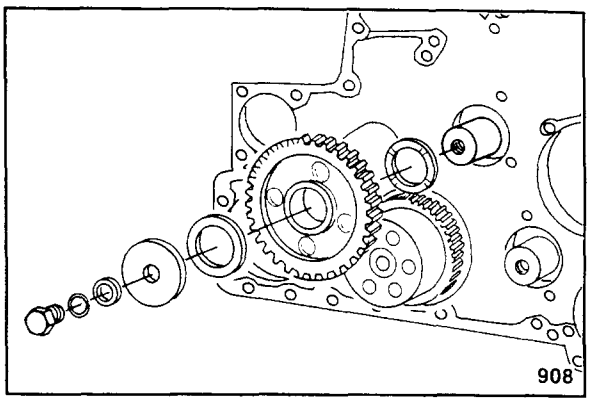


**Note:** Do not remove the idler shaft unless it is loose or damaged.

3. Remove the shaft if necessary.

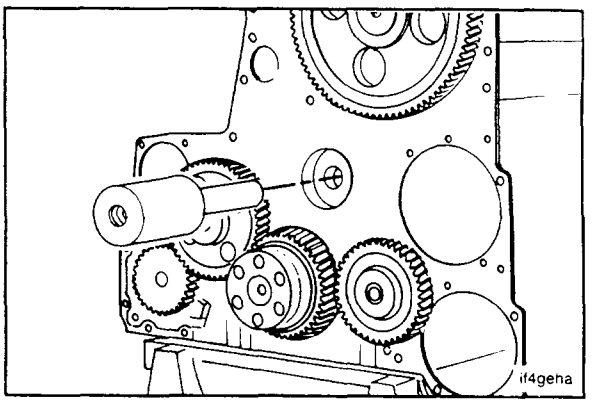


## Check For Reuse

1. Measure the idler shaft bores in the block.

| Camshaft or Water Pump Idler Bore | | |
|---|---|---|
| mm | | in |
| 39.57 | MIN | 1.558 |
| 39.60 | MAX | 1.559 |

| Hydraulic Pump Idler Bore | | |
|---|---|---|
| mm | | in |
| 36.50 | MIN | 1.437 |
| 36.53 | MAX | 1.438 |

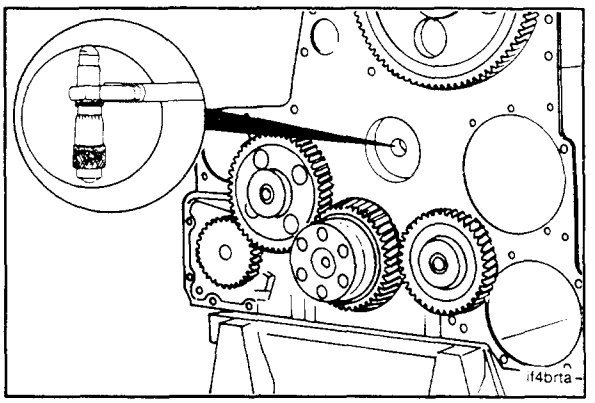


## Install

1. Check to make sure the 1/8 inch pipe plug is installed in the small end of the shaft.

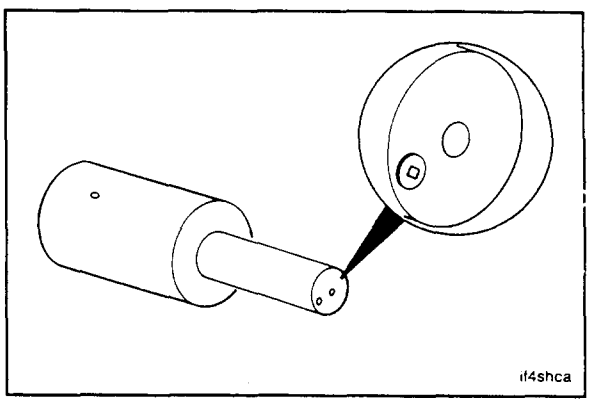

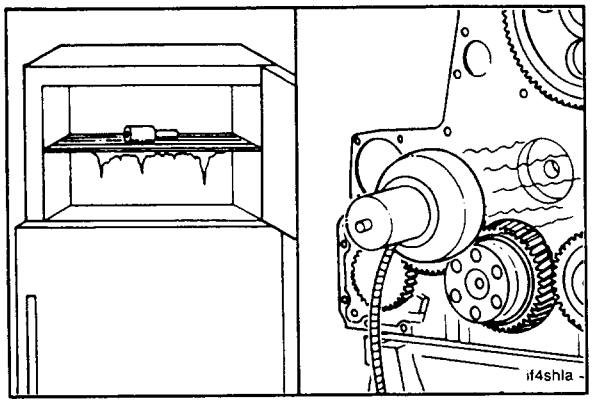


**Caution: Do not attempt to install the shafts in the bores with a hammer. Damage to the parts will result.**

2. Freeze the shaft so it will shrink. Pack the shaft in dry ice for a minimum of 40 minutes.

   An alternate method is to put the shaft in a freezer. Adjust the temperature to 0°C [32°F] for eight hours.

3. Direct a heat lamp on the block bore(s) for two hours before installation.

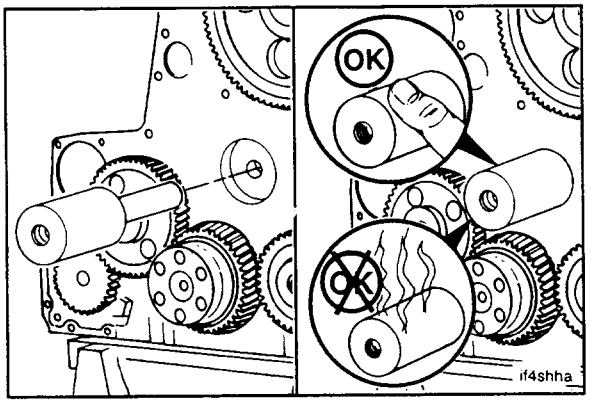


**Caution: Wear protective clothing to prevent personal injury.**

4. Install the shaft in the bore. Allow the parts to come to room temperature before installing the gear.

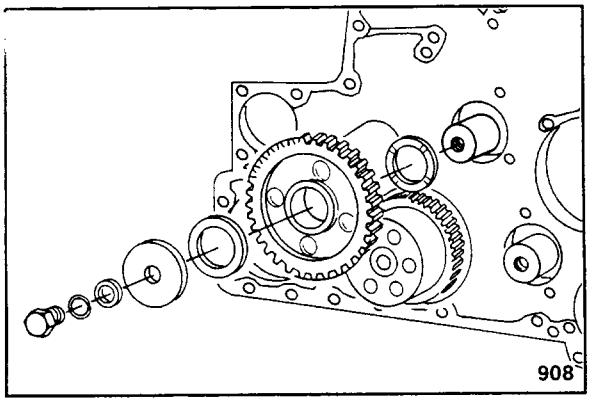


**Caution: The grooves in the thrust washer must be positioned toward the gear.**

**Caution: The "ZERO" mark on the camshaft idler gear must be aligned with the "ZERO" mark on the crankshaft.**

5. Lubricate the shaft, gear, bushing,and the thrust washers with Lubriplate No. 105, or equivalent.

   Install the parts and tighten the capscrews to 45 N•m [35 ft-lb].

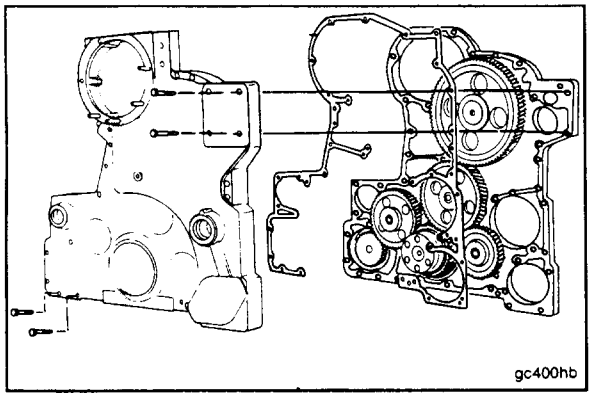


6. Install the front gear cover and all related components. Refer to Procedure 07-42.

# Front Engine Support - Replace (07-46)

1. Install lifting hook, Part No. ST-1286 or 3376879, on the cast boss of the rocker housing shown.

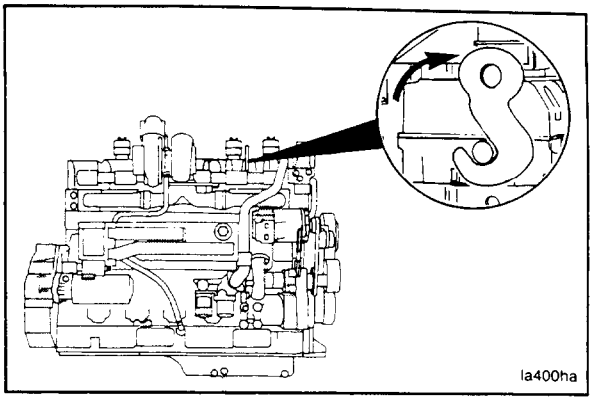


2. Remove the two capscrews that attach the support to the equipment frame.

   Use a hoist and lift the weight of the engine off the front support.

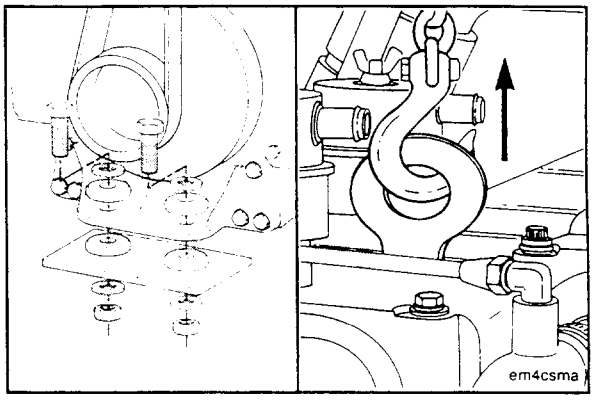


3. Use the engine support bracket kit, Part No. 3375272. Install one bracket on each side of the engine.

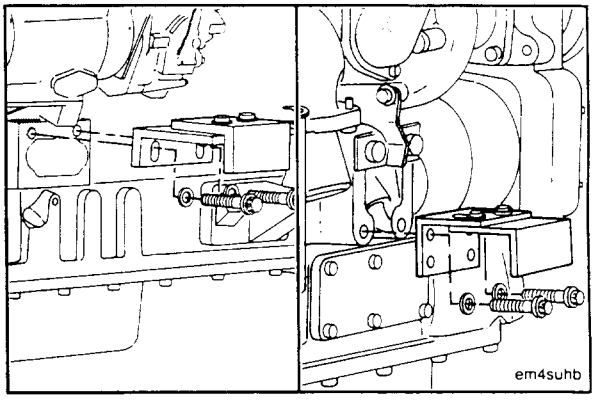


4. Lower the engine until the brackets are supporting the weight.

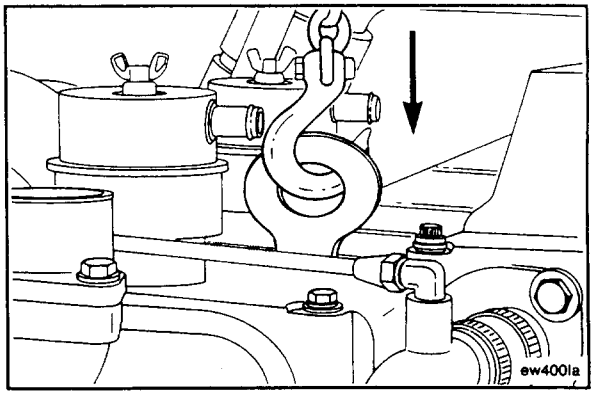

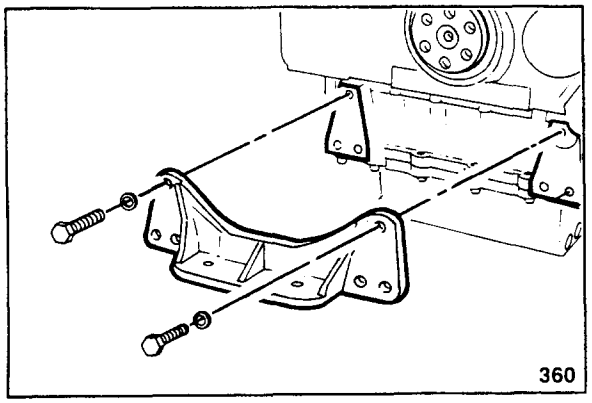


5. Remove the front engine support.

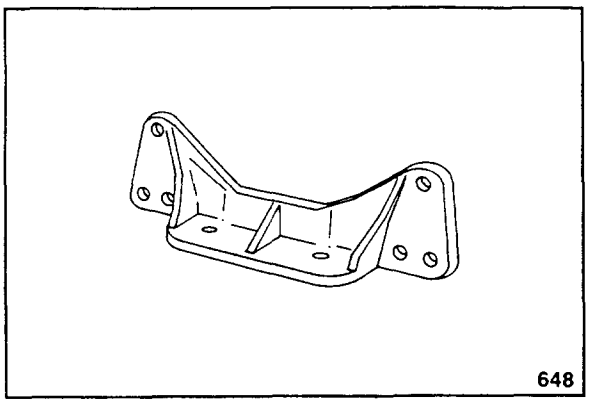


## Check For Reuse

1. Clean and check the support for reuse. Check for cracks or damage.

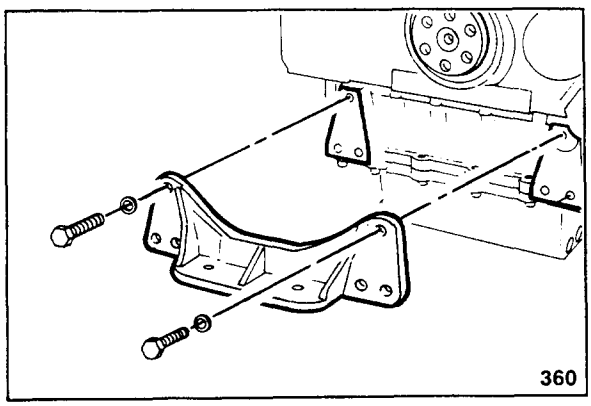


## Install

1. Install the support, washers and capscrews. Tighten the capscrews to 195 N•m [145 ft-lb].

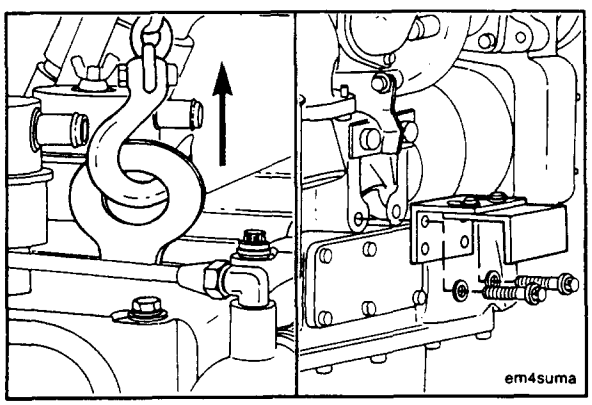


2. Raise the engine to remove the weight from the support brackets. Remove the support brackets.

3. Lower the engine until the front engine support is in position. Install the capscrews. Tighten the capscrews to 205 N•m [150 ft-lb].

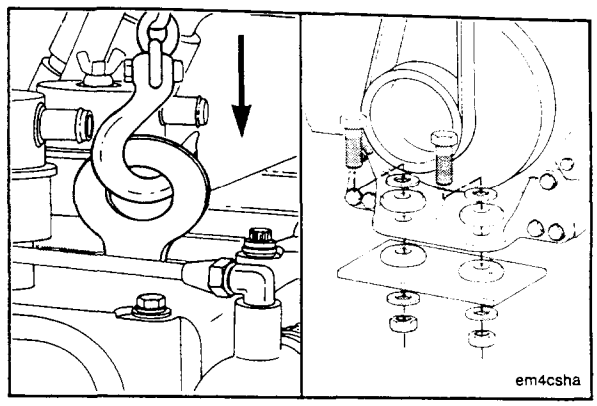


# Crankshaft Gear - Remove And Install (07-47)

## Remove

**Note:** ONLY remove the gear when the crankshaft or the gear is damaged.

1. Use a puller jaw, Part No. 3375835, and bridge assembly, Part No. 3375834. Install the puller jaw and bridge assembly on the gear.

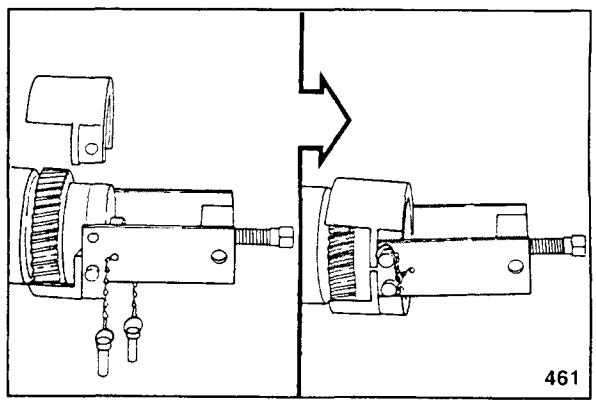


**Caution: Do not exceed 475 N•m [350 ft-lb] of torque when turning the jackscrew.**

2. Lubricate the puller jackscrew with engine oil. Hold the pry bar and turn the jackscrew to remove the gear

**Caution: Heat can be used to help remove the gear. But, do not use a cutting torch. The high temperature will damage the gear teeth.**

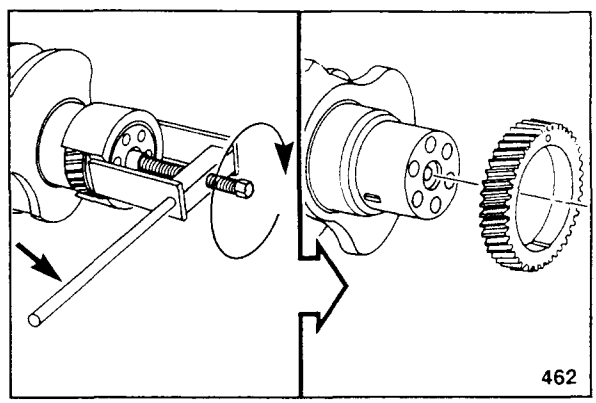


3. Remove the key. Use a hone stone and polish the shaft O.D. Remove all of the small scratches, burrs, and small grooves.

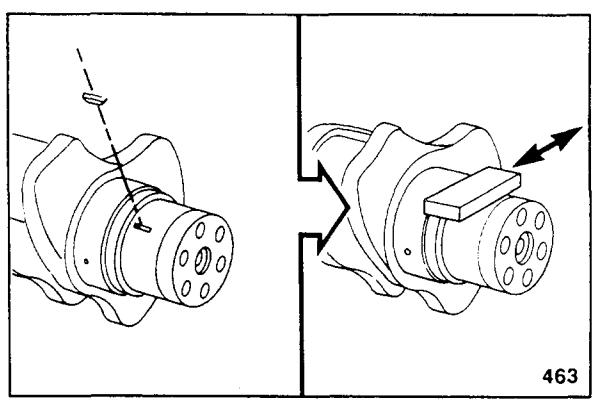

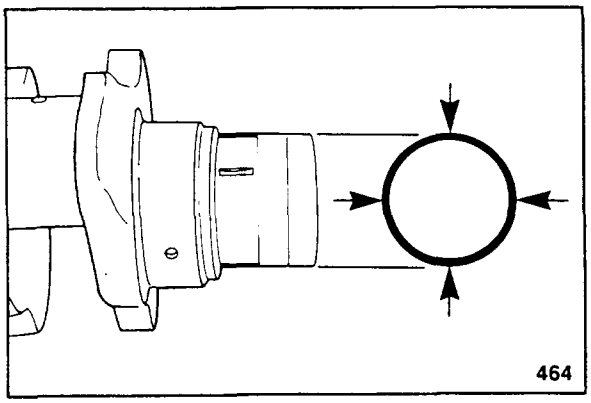


## Check For Reuse

1. Clean and check the crankshaft for reuse. Measure the O.D.

| Crankshaft O.D. (Gear Location) | | |
|---|---|---|
| mm | | in |
| 111.25 | MIN | 4.380 |
| 111.28 | MAX | 4.381 |

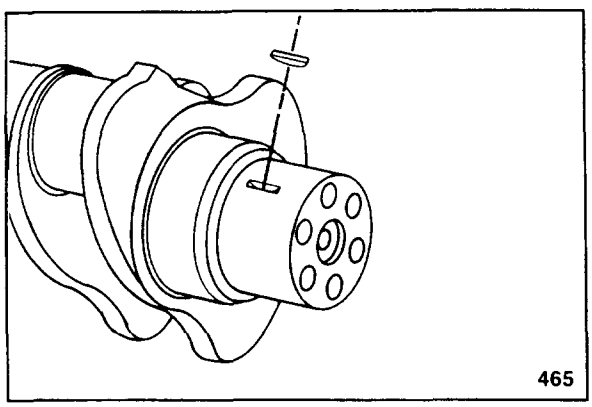


## Install

1. Install the key.

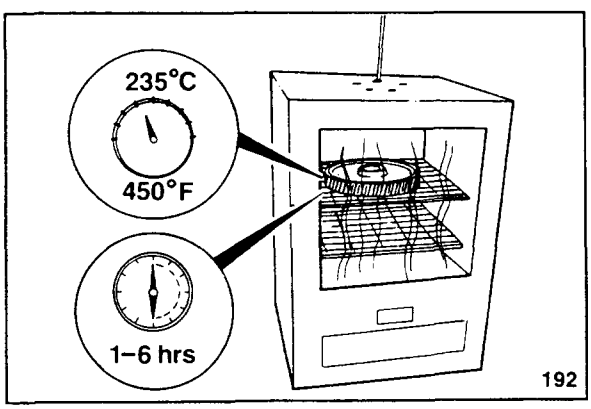


**Caution: Wear protective clothing to prevent personal injury from burns.**

**Caution: Do not exceed the specified time or the temperature. Damage to the gear and the gear teeth will result.**

**Caution: Do not attempt to install the gear without using heat.**

2. Use an oven and adjust the heat to 235°C [450°F]. Heat the gear for a minimum of one hour but no more than a maximum of six hours. The I.D. of the gear will become larger and will simplify installation.

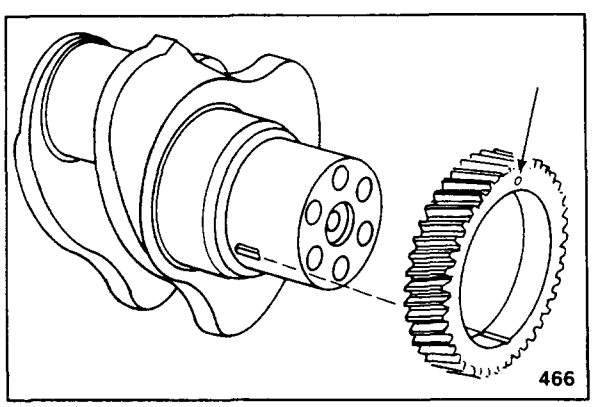


**Caution: Wear protective clothing to prevent personal injury from burns.**

**Note:** The timing mark on the crankshaft gear must be visible from the front of the gear after it is installed on the crankshaft.

3. Lubricate the O.D. of the crankshaft with Lubriplate No. 105, or equivalent. Remove the gear from the oven and install it on the crankshaft. The keyway in the gear must be aligned with the key in the crankshaft.

**Caution: Allow the gear to air cool slowly. Do not use water or oil to reduce the cooling time. This will cause the gear to crack.**

# Camshaft - Replace (07-48)

## Remove

1. Remove the gear cover and all related components. Refer to Procedure 07-39 (One-piece design) or 07-42 (Two-piece design).

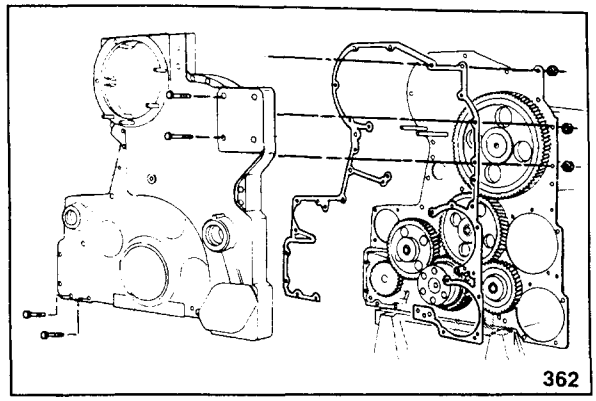


2. Remove all of the cam follower assemblies. Refer to Procedure 07-17.

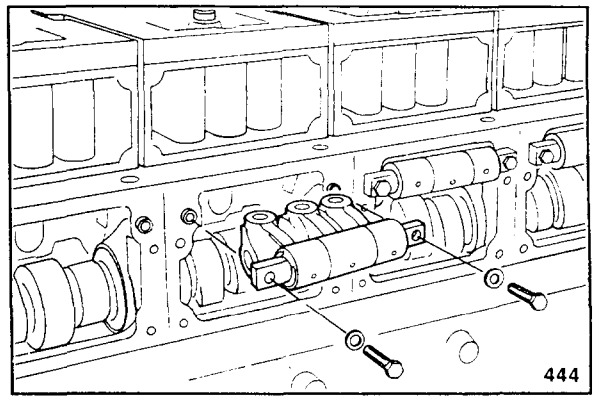


3. Remove one injector to allow timing to be checked. Refer to Procedure 05-09. The No. 3 cylinder is the best cylinder to use.

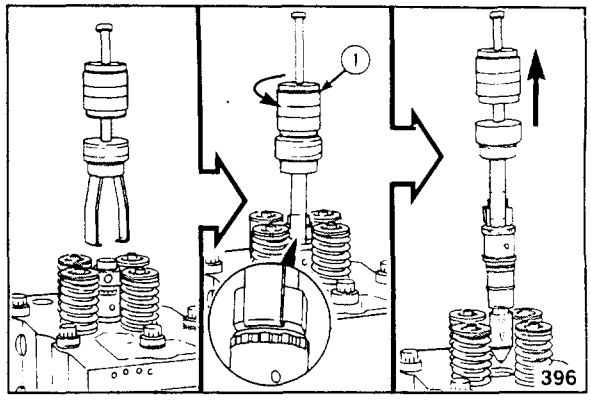


4. Bar the engine by turning the crankshaft. Turn the engine until the index marks on the crankshaft and camshaft gears are in alignment.

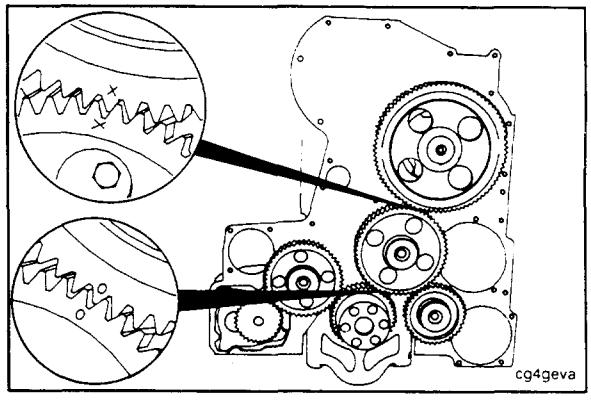

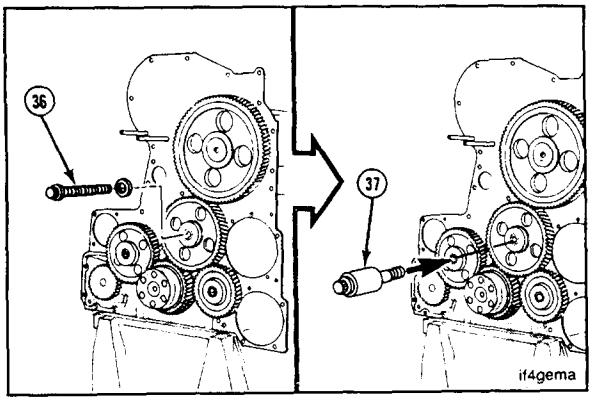


**Note:** The bolt-in idler shaft has a flange that requires the shaft, the idler gear, and the thrust washers to be removed as an assembly.

5. Remove the camshaft idler gear. Remove the capscrew (36).

   Use an old piston pin and a K19 cylinder head capscrew as a slide hammer (37). Put the capscrew in the shaft.

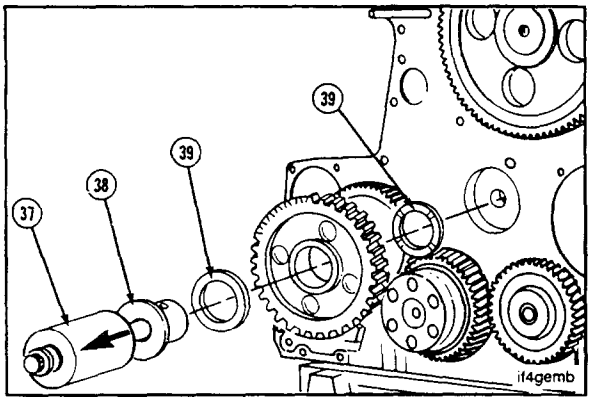


6. Use the slide hammer (37). Remove the shaft(38), two thrust washers (39), and the gear as an assembly.

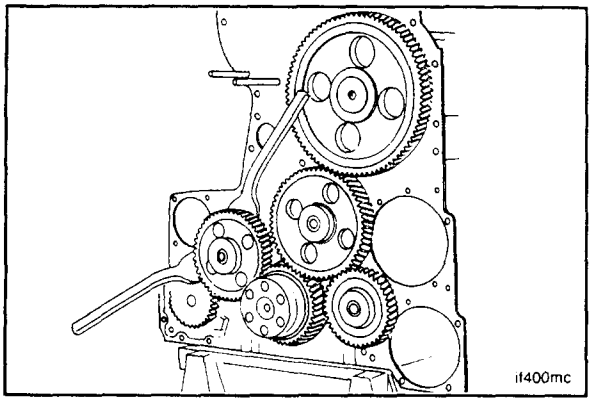


**Note:** Newer engines do not have threads in the shaft. To remove the gear assembly, use two pry bars and pry the gear and shaft from the block.

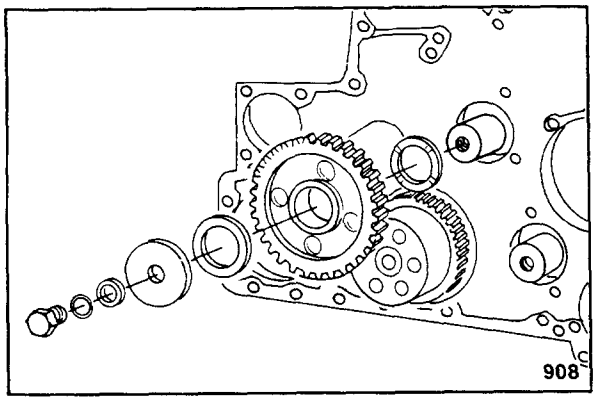


**Note:** Some engines have a press fit design idler shaft that do not have to be removed from the block to remove the idler gears.

7. Remove the capscrew, washers, gear, and the thrust washers.

8. Remove the sea water pump drive gear.

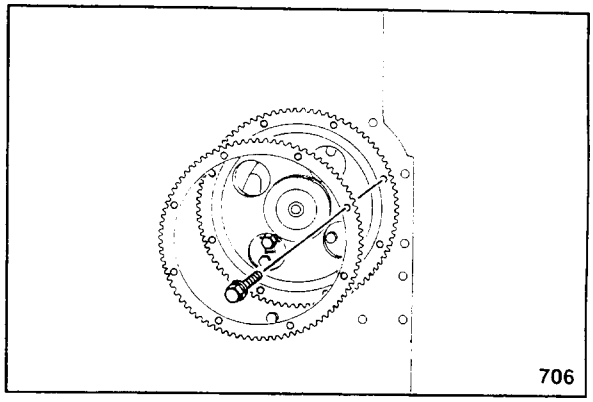


9. Use a mallet and a drift. Bend the lockplate off of the two mounting capscrews. Remove the capscrews and the lockplates.

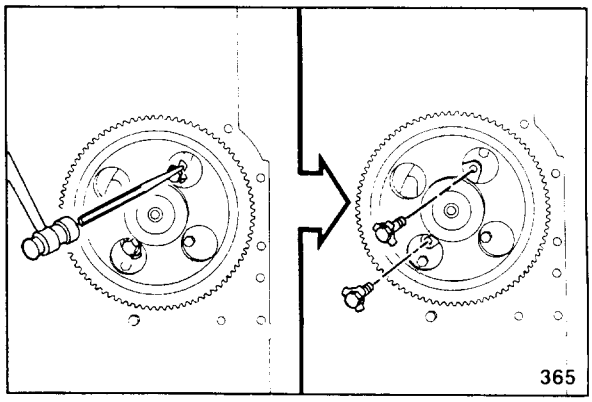


**Caution: Pilots must be used to prevent damage to the camshaft and the bushings. Be sure the hooks do not damage the camshaft bushings.**

10. Use four camshaft installation pilots, Part No. 3376280. Put the pilots on the inner base circle of the valve lobes for the last two cylinders.

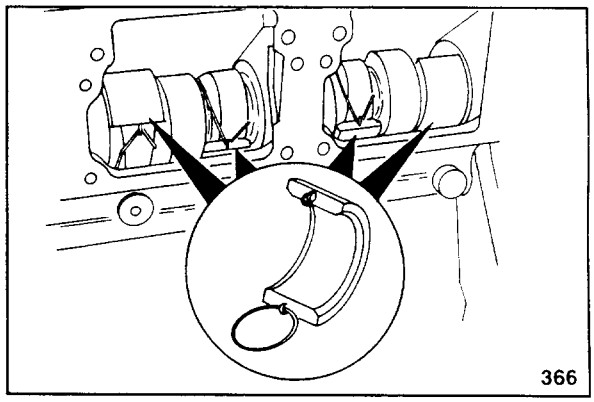


**Caution: This part weighs more than 23 kg [50 lbs.]. Personal injury can result.**

11. Rotate the camshaft during removal so that one of the pilots is always on the bottom part of the camshaft bushing.

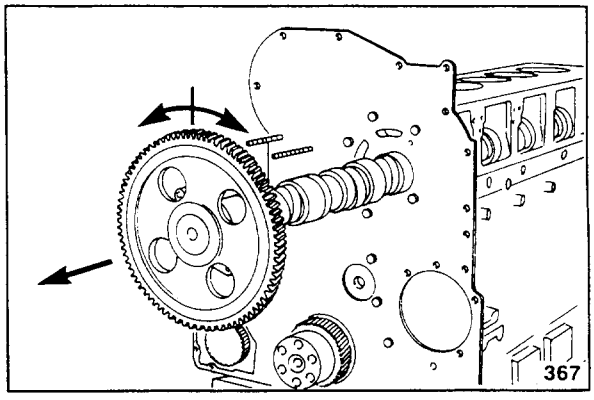

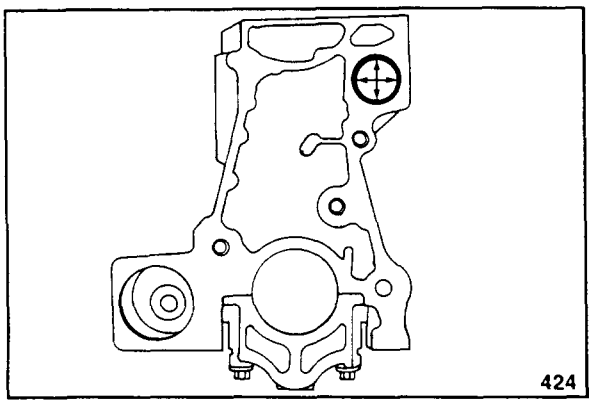


## Check For Reuse

1. Check the amount of copper exposure on the camshaft bushing. If it extends more than 180 degrees around the bushing, the bushing must be replaced. Refer to Procedure 07-50.
2. Measure the I.D.

| Camshaft Bushing I.D. | | |
|---|---|---|
| mm | | in |
| 76.200 | MIN | 3.0000 |
| 76.289 | MAX | 3.0035 |

If the bushing is not within specifications, the bushing must be replaced. Refer to Procedure 07-50.

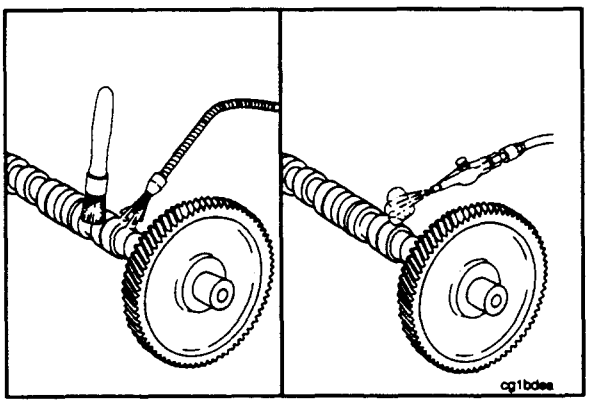


1. Clean the camshaft with solvent and dry with compressed air.

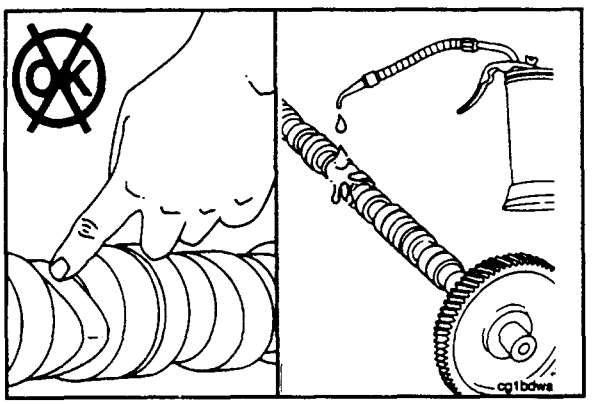


2. After the camshaft has been cleaned, do not touch the machined surfaces with bare hands.This will cause rust to form. Lubricate the camshaft with clean 15W-40 oil before handling.

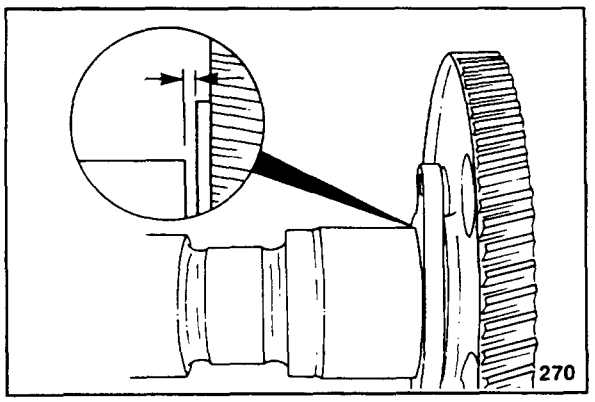


3. Use a feeler gauge to measure the clearance between the gear and the thrust plate.

| Camshaft End Clearance | | |
|---|---|---|
| mm | | in |
| 0.15 | MIN | 0.006 |
| 0.33 | MAX | 0.013 |

If the end clearance is not within specification, the gear must be removed. Refer to Procedure No. 07-49.

4. Measure the seven camshaft bushing journals.

| Camshaft Bushing Journal O.D. | | |
|---|---|---|
| mm | | in |
| 76.07 | MIN | 2.995 |
| 76.12 | MAX | 2.997 |

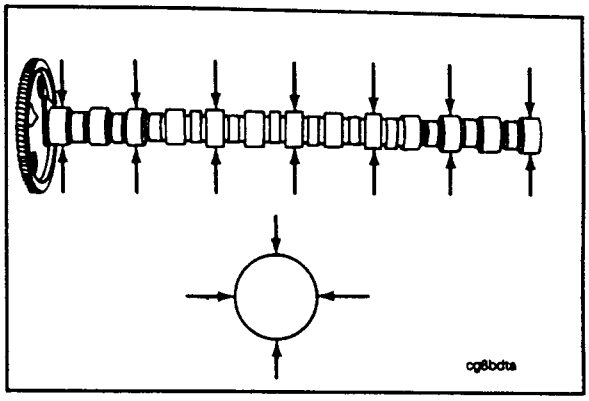


5. Visually inspect the camshaft lobes for cracks, scratches or other damage.

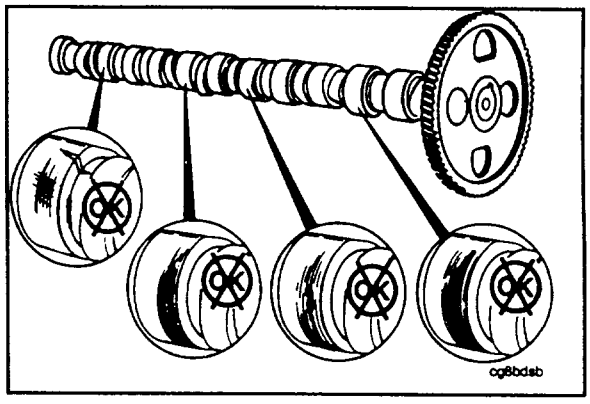


## Install

1. Install the bolt in design idlers.

**Caution: Engines that contain a hydraulic pump must have the oil holes in the hydraulic pump idler shaft as shown. Idler gear bushing failure will result if the oil holes are not aligned correctly.**

2. Mark the flange to show oil hole orientation.

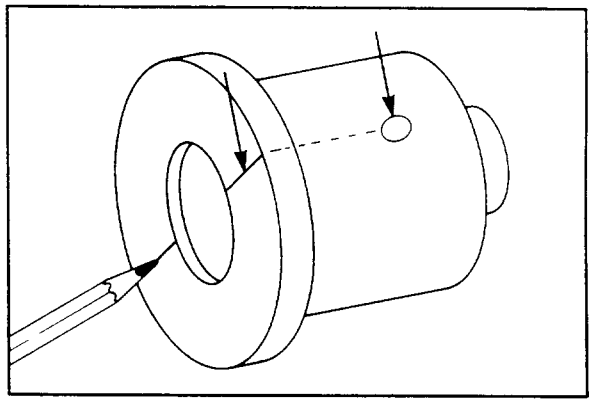

**Caution: The grooves in the thrust washers must be turned towards the gear.**

**Caution: The timing marks on the camshaft idler gear must be visible when the gear is installed.**

a. Lubricate the gear bushing, shaft, and the thrust washer with Lubriplate No. 105, or equivalent.

b. Lubricate the capscrew with engine oil. Assemble the parts as shown.

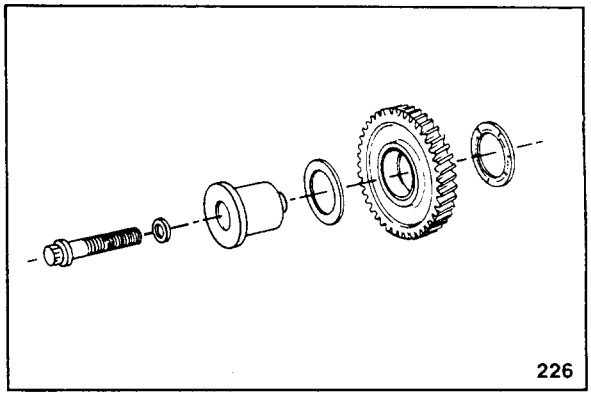

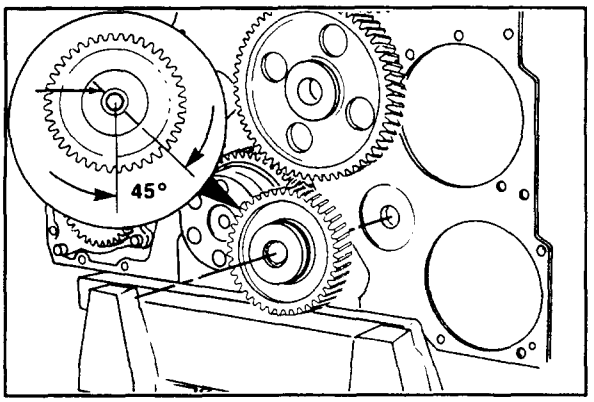


**Caution: Engines that contain a hydraulic pump must have the oil holes in the hydraulic pump idler shaft oriented as shown. Idler gear bushing failure will result if the oil holes are not aligned correctly.**

3. Align the oil holes in the shaft to an angle 45° to the left of vertical.
4. Use the capscrew to pull the shaft into the bore. Tighten the capscrew to 245 N•m [180 ft-lb].

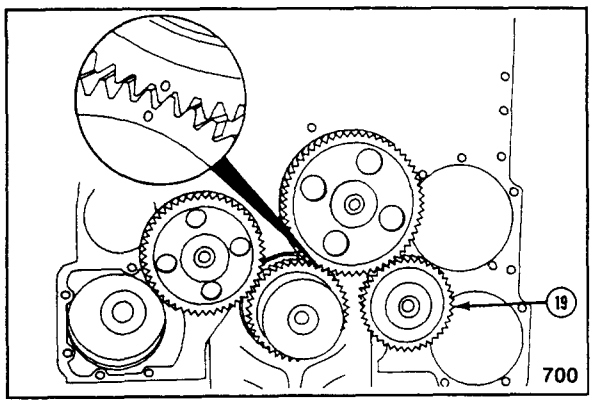


c. Align the "ZERO" on the camshaft idler gear with the "ZERO" on the crankshaft gear.

**Caution: Do not allow the inner thrust washer to fall between the shaft and the block.**

d. Use the capscrew to pull the shaft into the bore. Tighten the capscrews to 245 N•m [180 ft-lb].

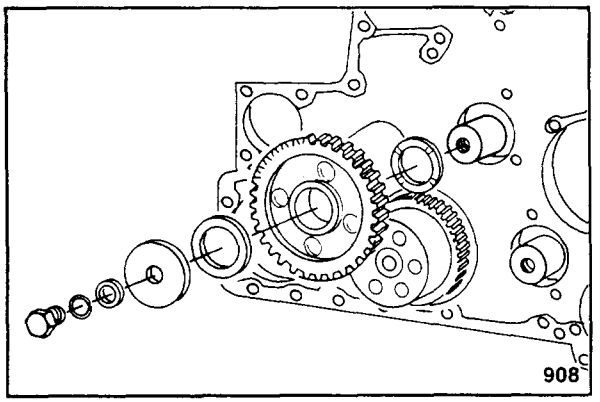


5. Install the press-in design idler gears.

**Caution: The grooves in the thrust washers must be turned towards the gear.**

a. Lubricate the gear bushing,shaft and the thrust washer with Lubriplate No. 105, or equivalent.

b. Lubricate the capscrew with engine oil. Assembly the parts as shown. Tighten the capscrews to 45 N•m [35 ft-lb].

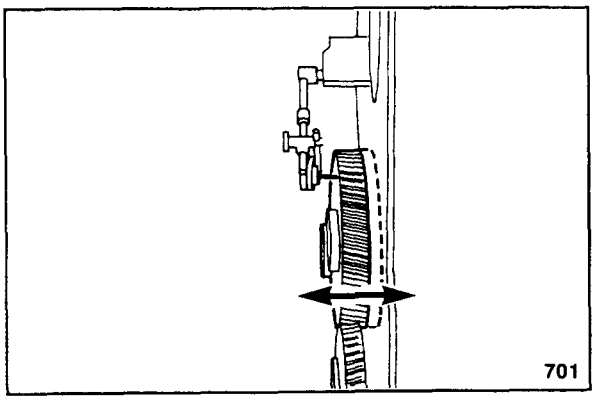


6. Use a dial indicator and measure the idler gear end clearance.

**Idler Gear End Clearance**

| mm | | in |
|---|---|---|
| 0.10 | MIN | 0.004 |
| 0.36 | MAX | 0.014 |

**Note:** If the clearance is not within specifications, check for foreign material between the parts or check for proper location of the thrust washers. Oversize thrust washers are available.

7. Install four camshaft installation pilots, Part No. 3376280, on the valve lobes for the last two cylinders of the camshaft.

8. Lubricate the camshaft and camshaft bushings with Lubriplate No. 105, or equivalent.

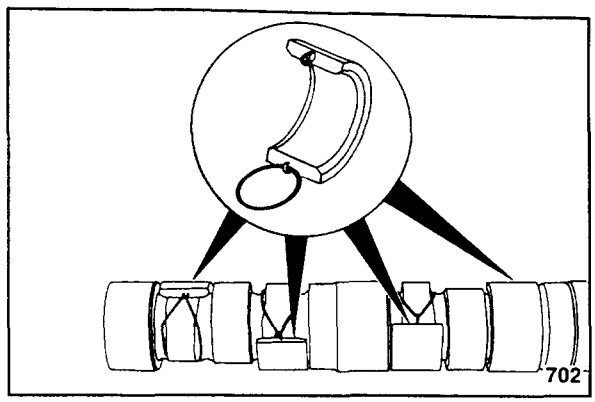


**Caution: If the installation pilots are not available, use caution to prevent the camshaft lobes from damaging the bushings.**

9. Install the camshaft. Turn the camshaft backward and forward as you push it in. Keep the pilots turned down to support the camshaft.

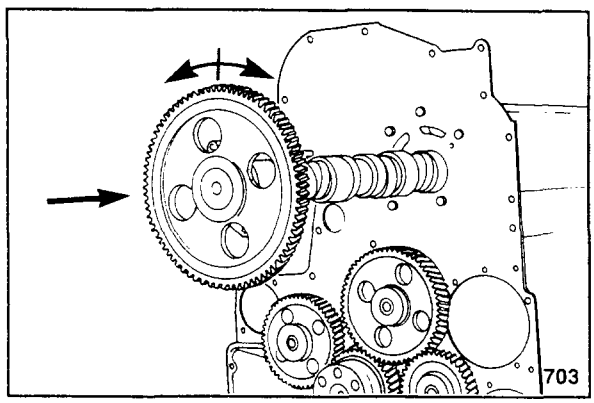


10. Align the "X" on the camshaft gear with the "X" on the camshaft idler gear.

**Note:** If necessary, rotate the thrust plate to push the camshaft into final position.

**Note:** The gear spacer plate gasket must not prevent the thrust plate from being flat against the block. If necessary, trim the gasket.

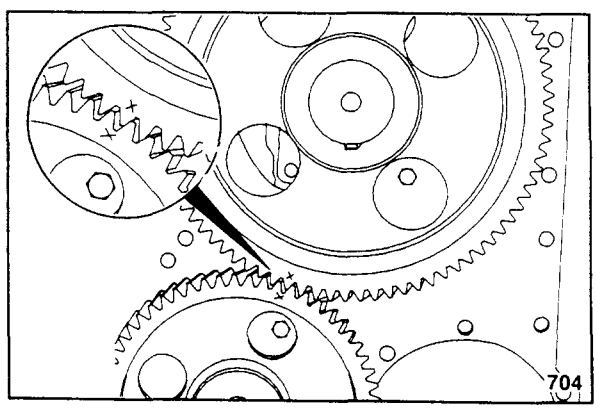


**Note:** If necessary, rotate the crankshaft so that the holes in the camshaft gear allow access to the capscrew holes in the thrust plate.

11. Install the two capscrews and lockplates. Tighten the capscrews to 45 N•m [35 ft-lb].

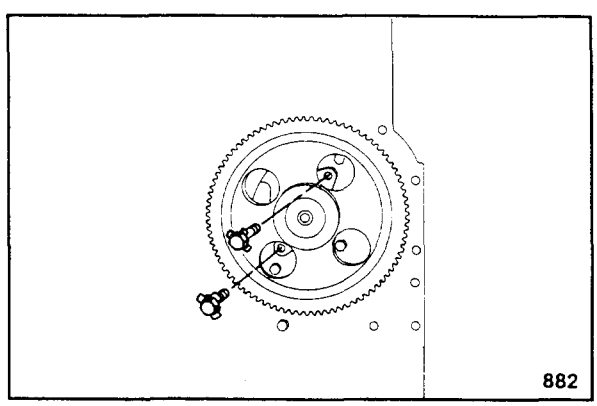

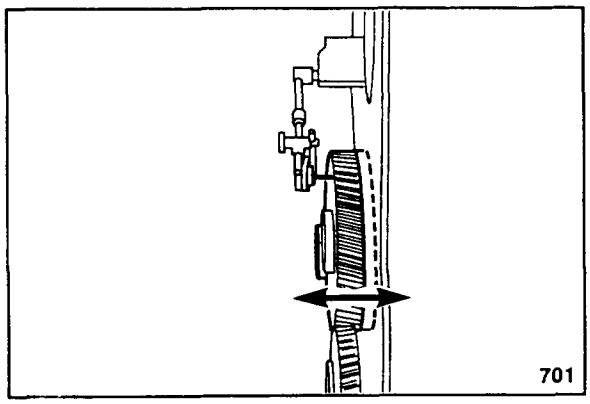


12. Use a dial indicator and measure the camshaft end clearence. The clearance must be the same as measured during inspection.

| Camshaft End Clearance | | |
|---|---|---|
| mm | | in |
| 0.15 | MIN | 0.006 |
| 0.33 | MAX | 0.013 |

**Note:** If the end clearance is not the same as measured during the inspection, check for foreign material or a piece of gasket between the thrust plate and the block.

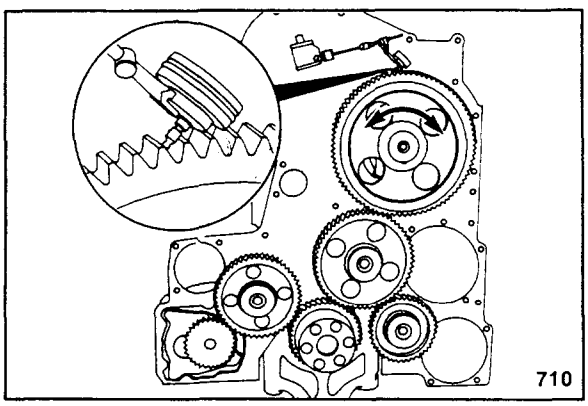


**Caution: The adjacent (engaging) gear must not turn as the gear being measured is turned.**

13. Use a dial indicator and position it as shown to measure the camshaft gear backlash.

    Rotate the gear being measured clockwise. Position the indicator to"ZERO". Rotate the gear counterclockwise and read the indicator.

| Front Gear Train Gear Backlash | | |
|---|---|---|
| mm | | in |
| 0.07 | MIN | 0.003 |
| 0.30 | MAX | 0.012 |

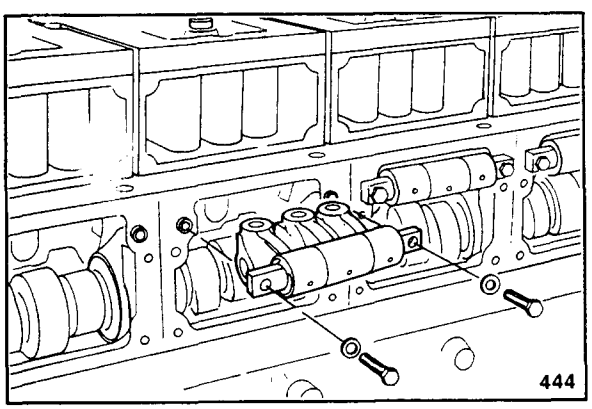


**Caution: Service replacement cam followers are coated with a heavy preservative to prevent rust. This preservative must be removed completely with solvent before the parts are installed on the engine.**

**Note:** The reason for installing ONLY one cam follower assembly at this time is to save time if the camshaft must be removed to adjust the injection timing.

**Caution: The cam follower mounting capscrews are special. They have a slot that allows the oil to flow to the cam follower assembly. The oil drilling intersects with the rear capscrew hole. The use of standard capscrews will result in failure.**

11. Install the cam follower asembly. The shaft must fit correctly on both ring dowels. Install the capscrews.

| Cam Follower Capscrew Torque Value | | |
|---|---|---|
| mm | | in |
| 39 | MIN | 29 |
| 42 | MAX | 31 |

15. Check the injection timing. Remove the camshaft and change the key if required. Refer to Procedure 07-20.

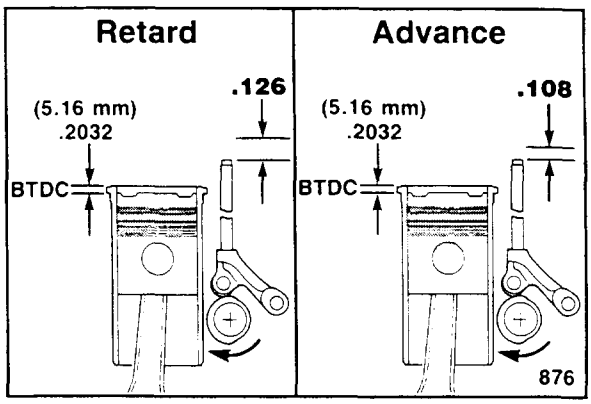


16. If the timing was checked on the No. 3 cylinder, the camshaft gear is almost in alignment for the accessory drive gear. Bar the engine backwards until the gears are aligned.

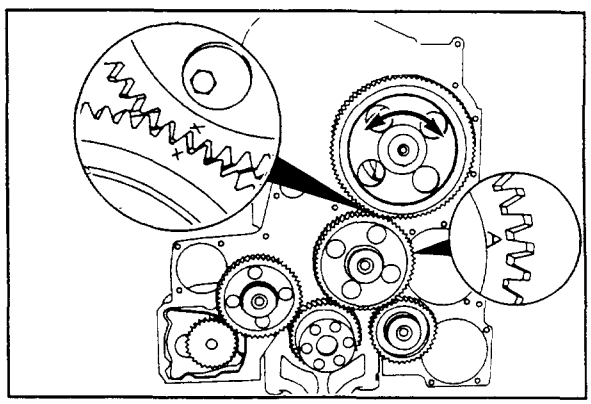

**Note:** Bend the lockplate to prevent the capscrew from turning.

17. Use a hammer and a drift. Bend one tab of the lockplate over the thrust plate. Bend one tab over the capscrew head.

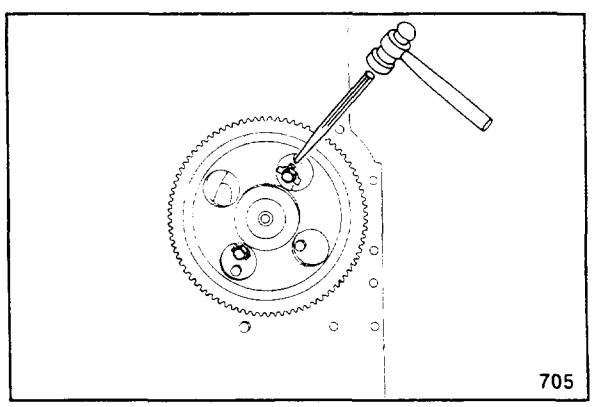


18. Install the sea water pump drive gear. Install the capscrews. Tighten the capscrews to 45 N•m [35 ft-lb].

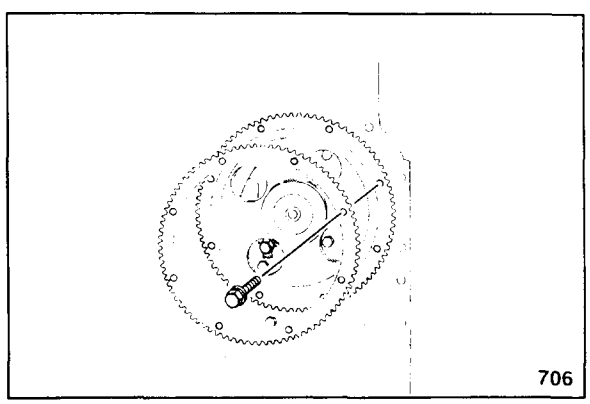

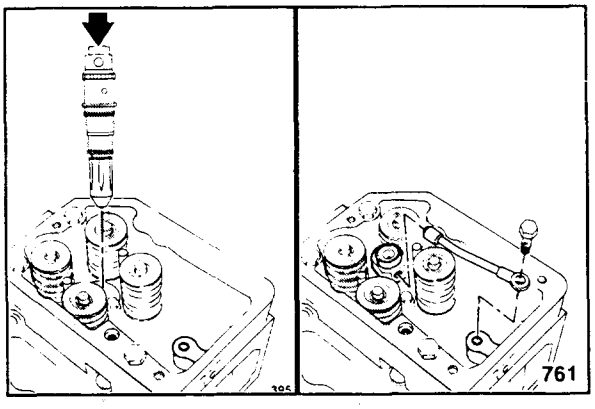


19. Install the injector. Refer to Procedure 05-09.

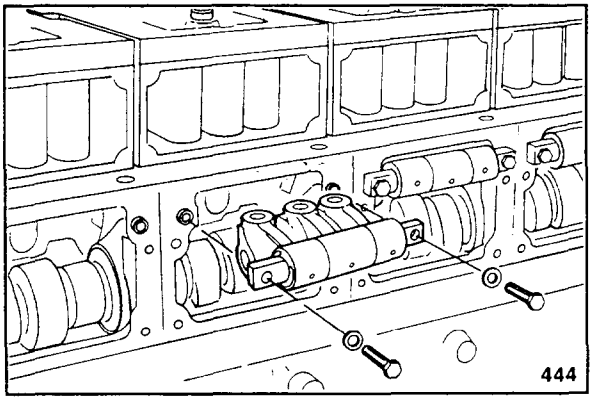


20. Install the remaining camfollower assemblies and related components. Refer to Procedure 07-17.

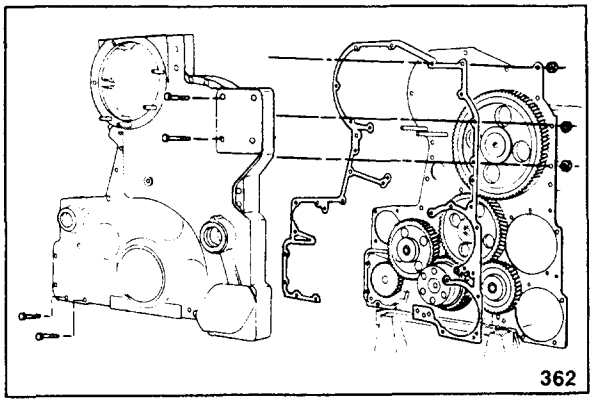


21. Install the gear cover and related components. Refer to Procedure 07-39 (One-piece design) or 07-42 (Two-piece design).

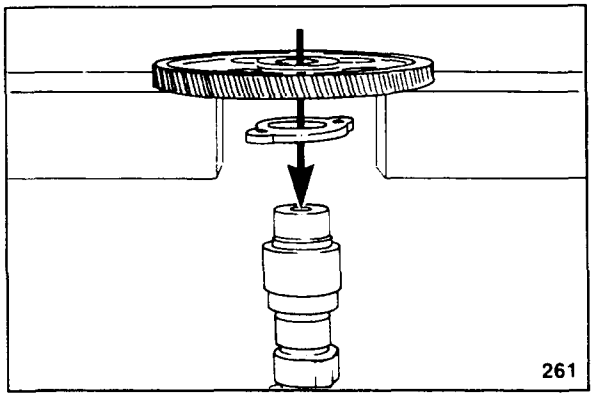


## Camshaft Gear - Remove And Install (07-49)

### Remove

1. Use an arbor press. Push the camshaft through the gear.

**Note:** Camshaft keys are available in different sizes (amount of offset). The injection timing is controlled by:

- The selection of.the camshaft key.
- The direction of the key offset when compared to the camshaft gear rotation.
- The amount of offset.

Check and record the direction of the key offset when compared to the camshaft gear rotation (same or opposite). Remove the key.

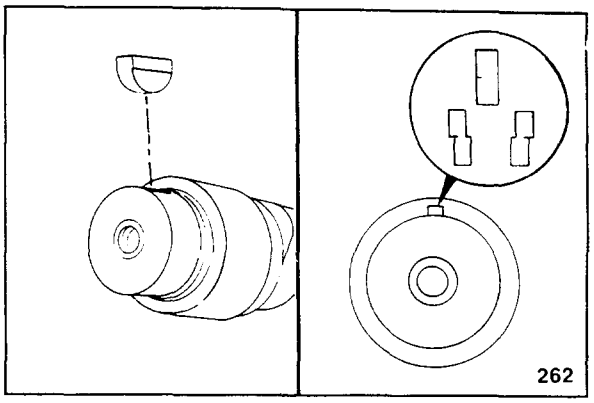


## Check For Reuse

1. Clean and check the camshaft and camshaft gear for reuse. Check for fretting damage. The camshaft must be replaced if the fretting damage is more than 3 mm [1/8-inch] wide.

   Measure the O.D of the camshaft.

| Camshaft O.D. (Gear Location) | | |
|---|---|---|
| mm | | in |
| 57.200 | MIN | 2.2520 |
| 57.210 | MAX | 2.2525 |

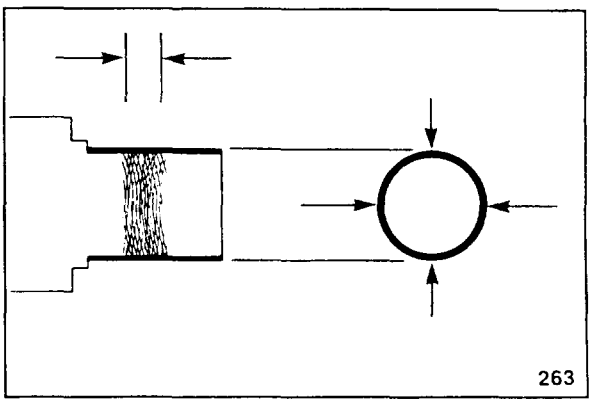


2. Check the gear for fretting damage. The gear must be replaced if the fretting damage is more than 3 mm [1/8-inch] wide.

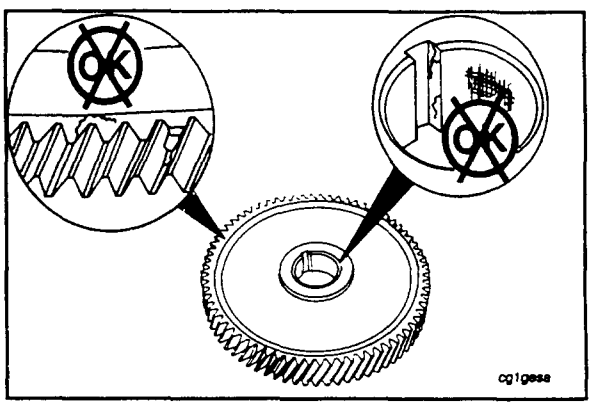


3. Measure the I.D of the camshaft gear.

| Camshaft Gear I.D. | | |
|---|---|---|
| mm | | in |
| 57.124 | MIN | 2.2490 |
| 57.150 | MAX | 2.2500 |

The gear must be replaced if the I.D. is not within specifications.

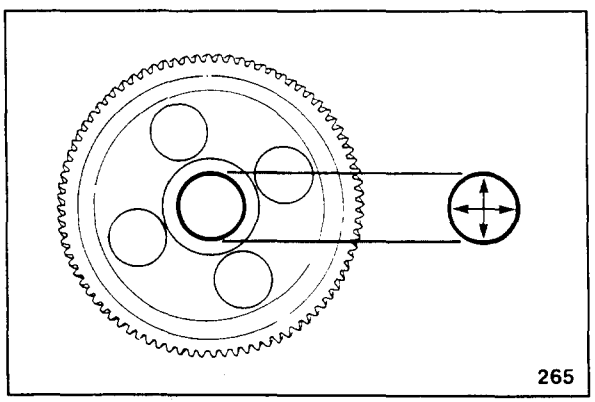

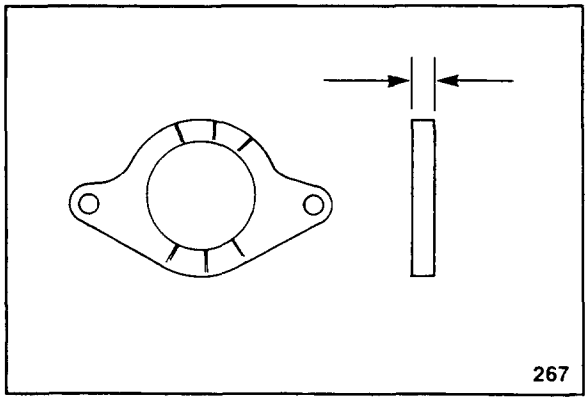


4. Check the thrust bearing for damage. Measure the thickness.

| Camshaft Thrust Bearing Thickness | | |
|---|---|---|
| mm | | in |
| 9.12 | MIN | 0.359 |
| 9.44 | MAX | 0.372 |

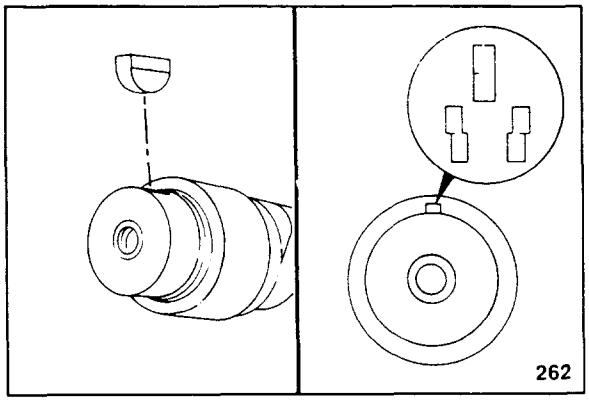


## Install

1. The camshaft gear must be removed to adjust the injection timing. If the camshaft was replaced, do not install the camshaft gear until the injection timing has been adjusted. Use a slip-fit gear and refer to Procedure 07-20.

| Timing Code | Recommended Key | Direction of Offset |
|---|---|---|
| AE | 216782 | Opposite Cam Rotation |
| CI | 200711 | With Cam Rotation |
| AM | 216782 | With Cam Rotation |
| AJ | 200706 | With Cam Rotation |
| CU | 3000492 | With Cam Rotation |
| CL | S-302 | None |

880

2. The following table lists the camshaft key for each timing code. Machining tolerances on the camshaft and the gear can cause the injection timing to be out of specifications. Refer to Procedure 07-20.

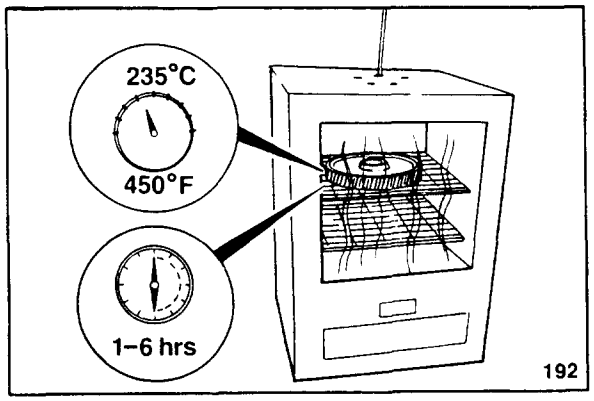


**Caution: Wear protective clothing to prevent personal injury from burns.**

**Caution: Do not exceed the specified time or the temperature. Damage to the gear and the gear teeth will result.**

**Caution: Do not attempts to install the gear without using heat.**

3. Use an oven with the temperature adjusted to 235°C [450°F]. Heat the gear in the oven for a minimum of one hour but no more than six hours. The I.D. of the gear will become larger and will simplify the installation.

**Caution: Wear protective clothing to prevent personal injury from burns.**

4. Lubricate the O.D. of the camshaft at the gear location with Lubriplate No. 105, or equivalent.

**Note:** The grooves in the thrust plate must be positioned toward the camshaft gear.

**Note:** The timing marks must be visible on the front of the gear after it is installed. The keyway in the gear must be aligned with the key.

5. Install the thrust plate. Install the camshaft gear.

**Caution: Allow the gear to air cool. Do not use water or oil to reduce the cooling time. It will cause the gear to crack.**

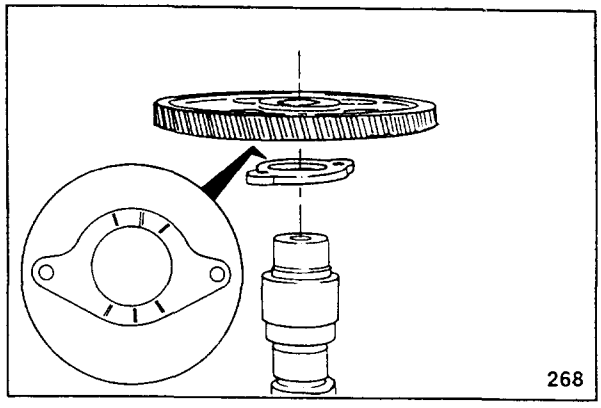


# Cylinder Block - Replace Camshaft Bushings (07-50)

## Remove

**Note:** Engines with an E.S.N. 31103629 or less have 8.10 mm [3.188 inch] camshaft bores.

**Note:** Engines with an E.S.N. greater than 31103629 have 8.26 mm [3.354 inch] camshaft bores.

1. Use the camshaft bushing driver assembly, Part No.3376637, and the specified engine kit (mandrel).

| Camshaft Bushing Bore in the Block | | Engine Kit (Mandrel) |
|---|---|---|
| mm | in | Part No. |
| 8.10 | 3.188 | 3376634 |
| 8.26 | 3.254 | 3376635 |

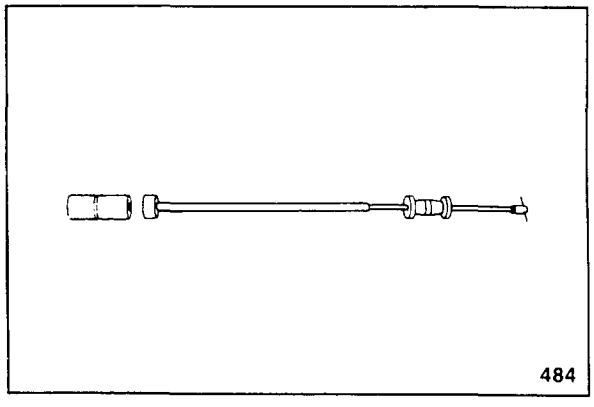


**Note:** The camshaft bushing driver kit, Part No. ST-1228, contains the camshaft bushing driver assembly.

Remove the camshaft bushings.

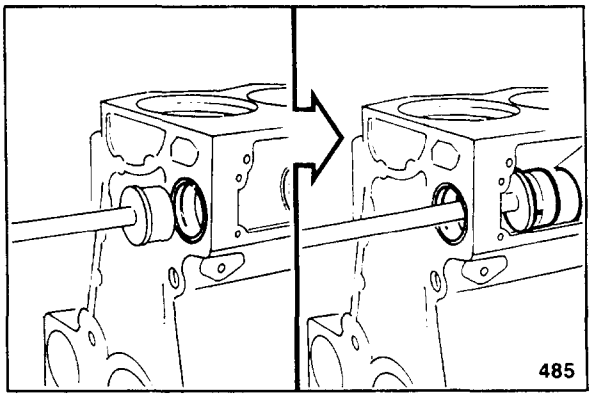

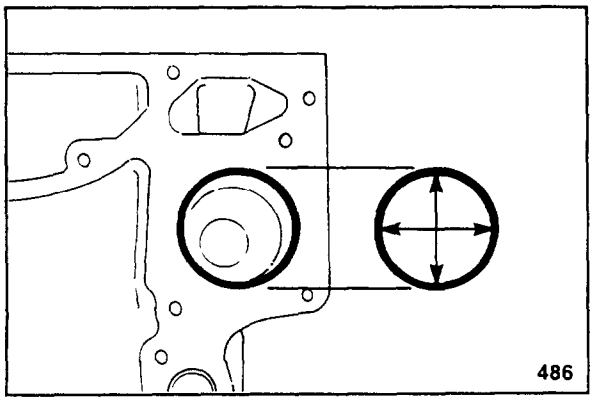


## Check For Reuse

1. Clean and check the camshaft bores in the block for reuse. Use emery cloth to remove any burrs and sharp edges from the bore. Measure the I.D.

| Camshaft Bushing Bore in the Block (After E.S.N. 31103629) | | |
|---|---|---|
| mm | | in |
| 82.639 | MIN | 3.2535 |
| 82.665 | MAX | 3.2545 |

| Camshaft Bushing Bore in the Block (Before E.S.N. 31103629) | | |
|---|---|---|
| mm | | in |
| 80.963 | MIN | 3.1875 |
| 80.988 | MAX | 3.1885 |

If the I.D. is not within specifications, repair the block by installing a repair sleeve. Refer to the Alternative Repair Manual.

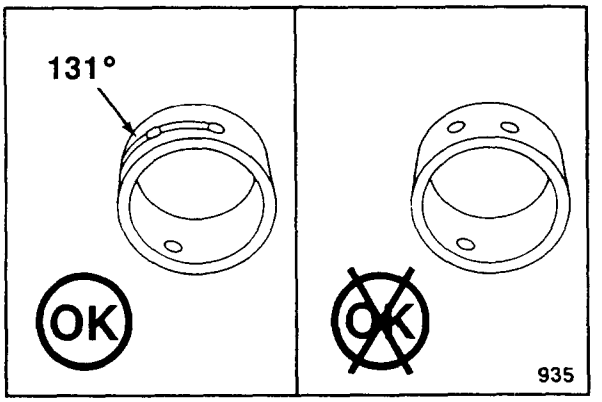


## Install

**Note:** Two styles of camshaft bushings are available for the 8.10 mm [3.188 inch] size block. The bushing with a 131° groove in the back must be used if the engine will have a Jacobs Engine Brake. If the engine will not have a Jacobs Engine Brake, a bushing that does not contain a groove on the back can be used.

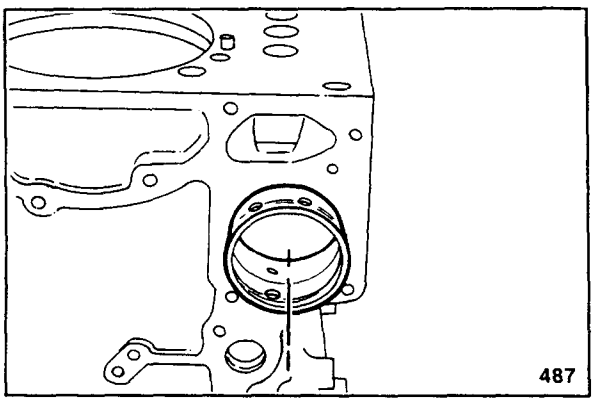


**Note:** The bushing for the 8.26 mm [3.254 inch] size block contains a 360 degree groove on the back (O.D.). When the bushing is installed in the block, the I.D. is identical to the thin wall bushing.

1. Align the oil holes in the bushing with the oil drillings in the block.

**Caution: Clean the oil groove in the back of the camshaft bushing to prevent contamination the lubrication system.**

2. Use the camshaft bushing driver assembly, Part No. 3376637 and the specified engine kit (mandrel). Install the bushing until the edge of the groove on the back (O.D.) is even with the edge of the block.

   Clean the bushing O.D. Remove any metal shavings from the oil groove.

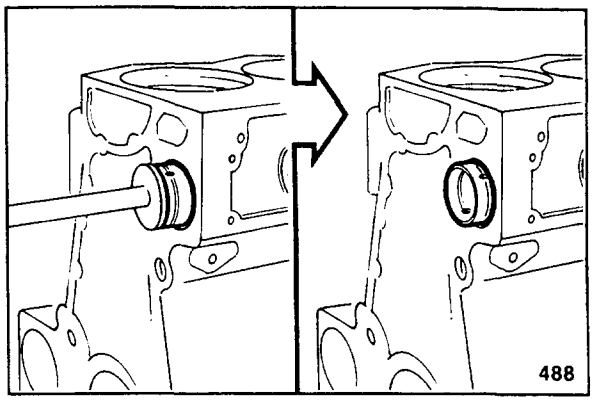


**Caution: Be sure that the front bushing is below the surface of the block.**

3. Install the bushing until the oil holes are aligned.

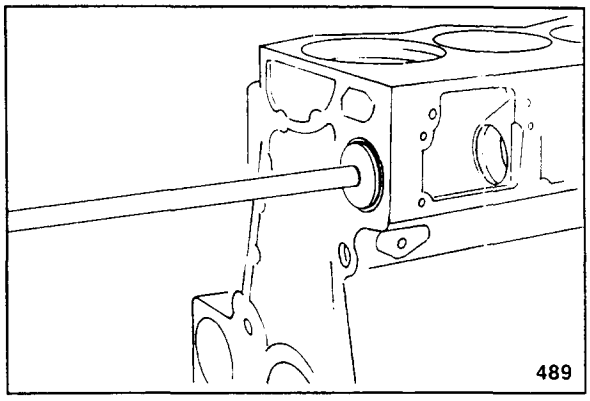


4. There are three holes in each bushing. All holes must be aligned except on the front bushing. There is no drilling to align with the upper holes on the front bushing.

   Use a 7 mm (1/4 inch) allen wrench and check the alignment of the bushing oil holes.

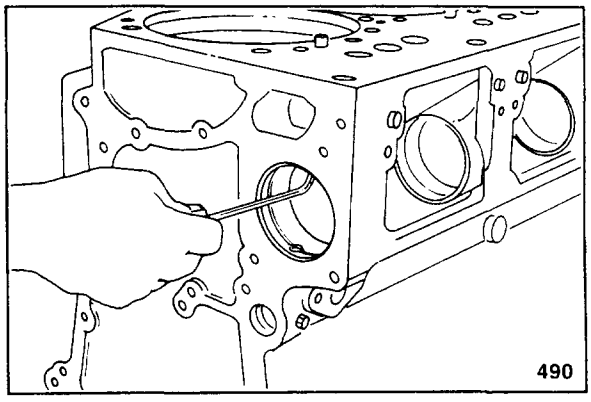


## Camshaft Rear Cover-Replace (07-51)

**Note:** The notch in the gasket and the cover must align with the oil drain back hole.

1. Install the camshaft cover gasket and the cover. Install the capscrews. Tighten the capscrews to 45 N•m [35 ft-lb].

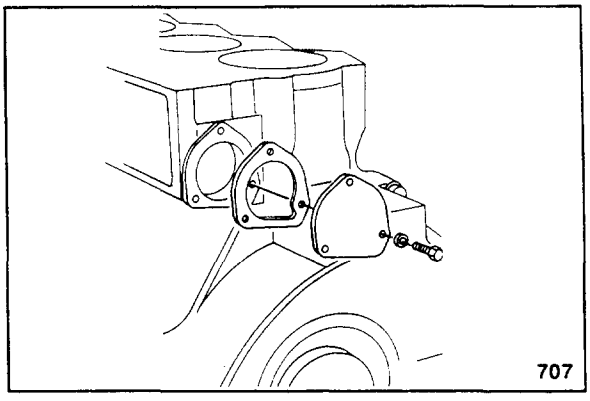

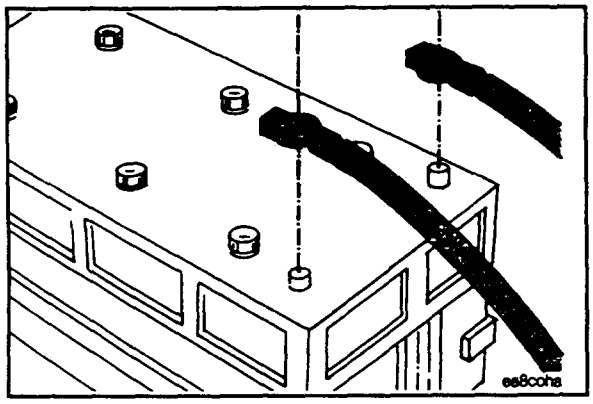


# Flywheel - Replace (07-52)

## Remove

1. Disconnect the batteries or starter air to prevent accidental engine starting.

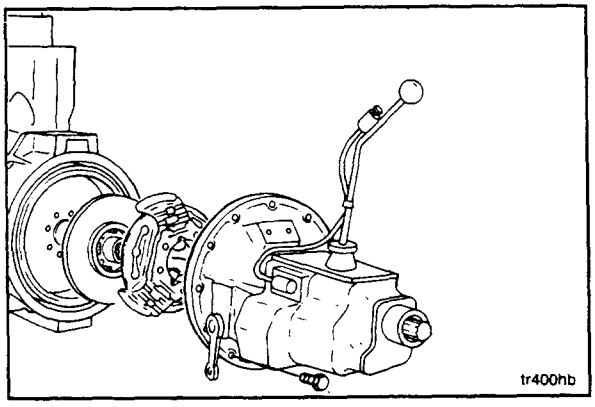


2. Remove the transmission, clutch, and all related components. Refer to the equipment manufacturer's instructions.

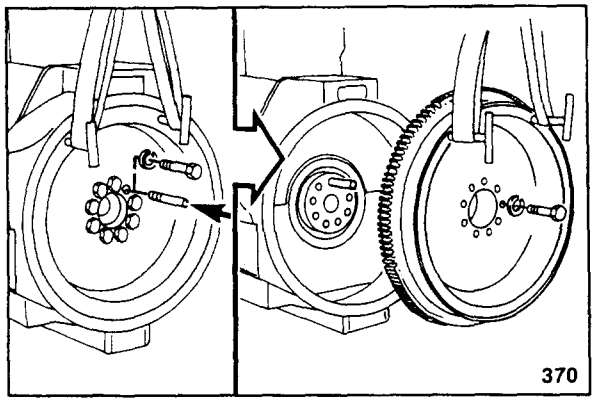


**Caution: This part weighs more than 23 kg [50 lbs]. Handle securely to prevent dropping.**

3. Use a 5/8-18 inch guide stud. Remove one capscrew and install the guide stud.

   Use a hoist, two tee handles, and a lifting sling. Install the tee handles. Remove the remaining capscrews. Remove the flywheel.

**Note:** Use a mallet to tap the flywheel from the crankshaft if necessary.

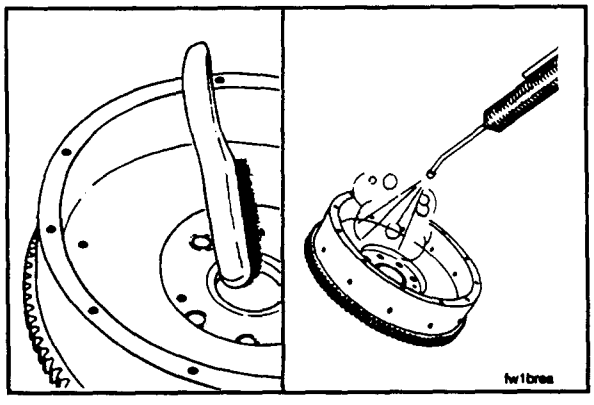


## Check For Reuse

1. Use a wire brush to clean the crankshaft pilot bore. Use steam or solvent to clean the flywheel. Dry with compressed air.

2. Visually inspect for nicks or burrs. Use fine crocus cloth to remove small nicks and burrs.

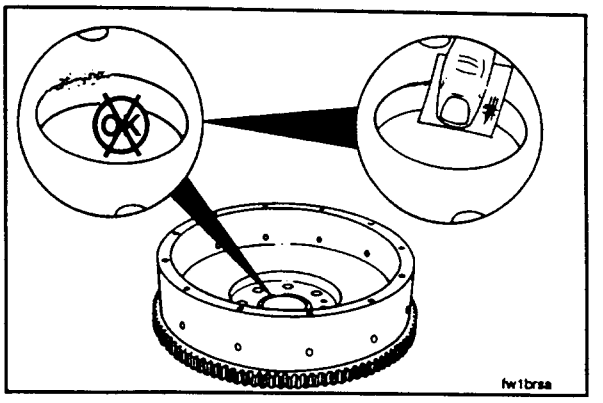


3. Inspect the flywheel for cracks.

**Warning: Do not use a cracked flywheel. A cracked flywheel can break or cause serious personal injury or property damage.**

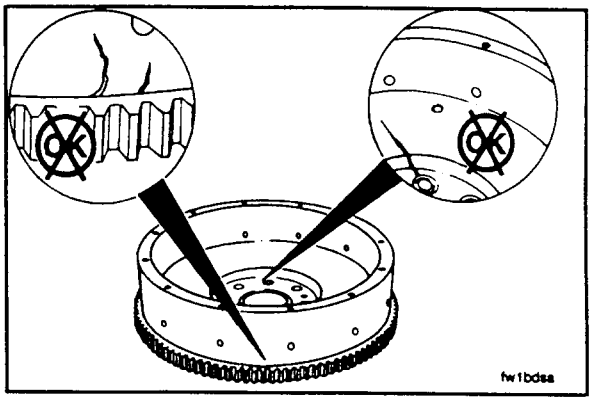


4. Inspect the flywheel ring gear teeth for cracks and chips.

**Note:** If the ring gear teeth are cracked or broken, the ring gear must be replaced. Refer to the K19 Shop Manual.

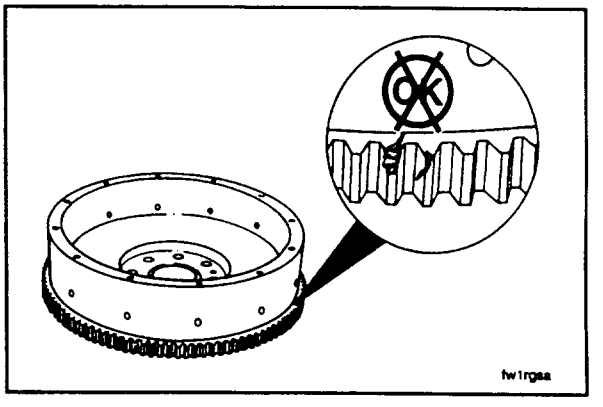


## Install

**Warning: The flywheel mounting capscrews must be a minimum of SAE Grade 8 with rolled threads. The flywheel mounting washers are special hardened plain washers. Use identical replacements to avoid possible flywheel failure resulting in personal injury or property damage.**

1. Lubricate the capscrews and washers with engine oil. Allow the excess oil to drip off of the parts. Do not lubricate the threads of the crankshaft.
2. A guide stud will help during assembly. Install the flywheel, washers, and the capscrews. The flywheel must be firmly against the crankshaft.

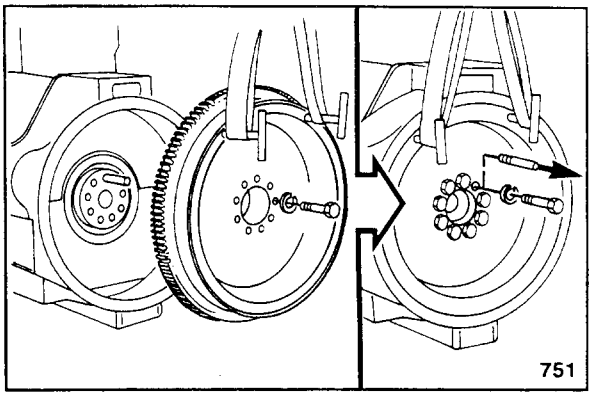

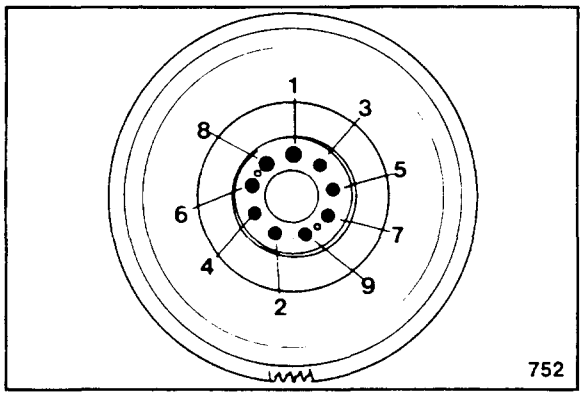


3. Use the following steps and the torque sequence shown.

| Flywheel Housing N•m | Capscrew Step | Torque Values ft-lb |
|---|---|---|
| 150 | 1 | 110 |
| 285 | 2 | 210 |

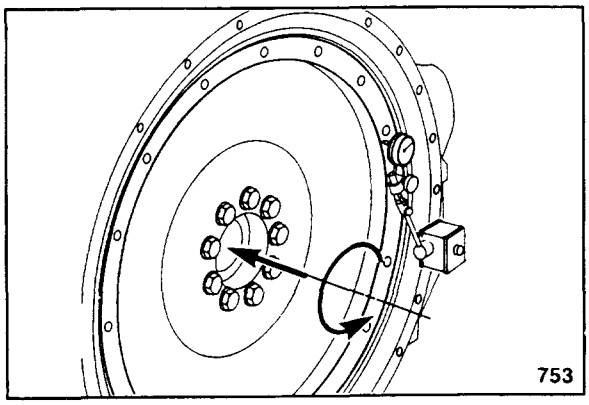


4. Measure The Flywheel Alignment

**Note:** The crankshaft end clearance must be pushed or pulled in the same direction each time a point is measured.

a. Attach an indicator as shown. Measure the flywheel alignment at four equally spaced points.

Measure the distance from the center of the crankshaft to the indicator tip. Multiply the distance by 0.025 mm [0.001 inch] to obtain the maximum run out.

If the flywheel alignment is not within specifications, check for interference between the flywheel and the crankshaft.

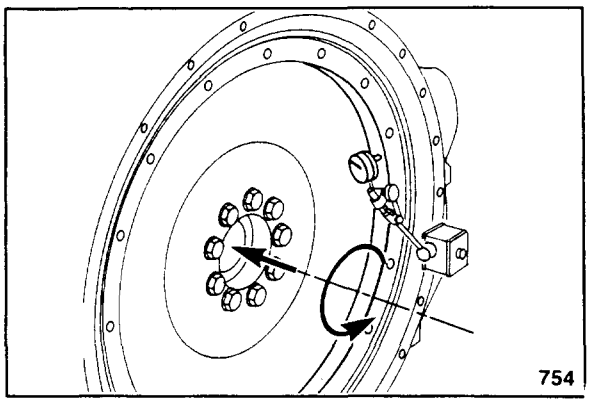


b. Attach an indicator as shown. Continue to look at the indicator while rotating the engine.

The maximum radial run out is 0.13 mm [0.005 inch]. If the run out is not within specification, the pilot on the flywheel is not positioned correctly on the crankshaft.

If the pilot is damaged, the flywheel must be replaced.

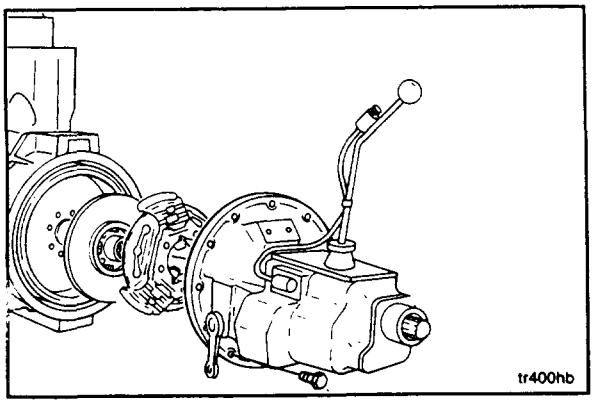


5. Install the transmission, clutch, and all related components. Refer to the equipment manufacturer's instructions.

6. Connect the batteries and starter air.

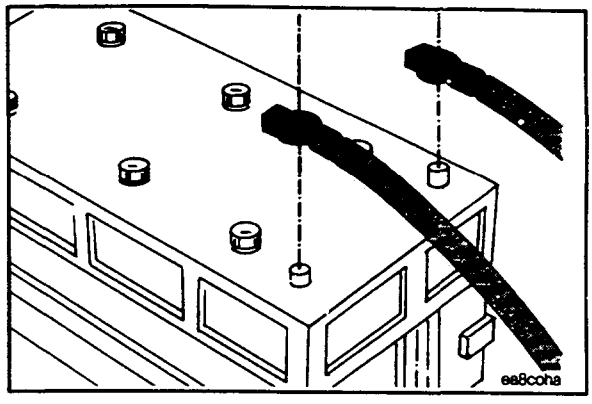


7. Start the engine. Check equipment operation.

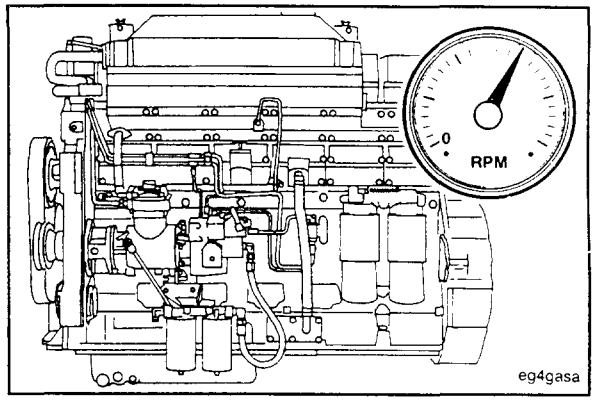


# Crankshaft Seal,Rear - Replace (07-53)

## Remove

1. Remove the transmission, clutch, and all related components. Refer to the equipment manufacturer's instructions. Remove the flywheel.Refer to Procedure 07-52.

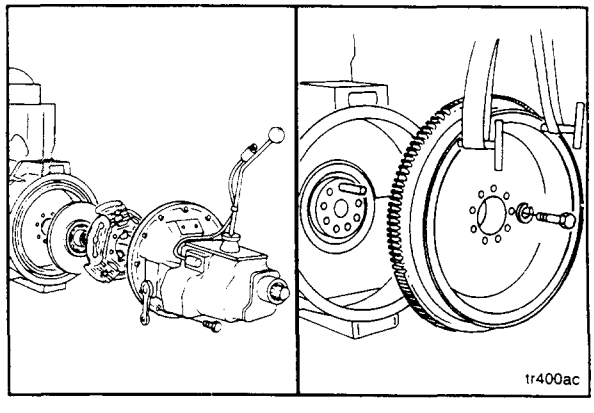


2. Remove the capscrews and the rear crankshaft seal. Remove and discard the o-ring.

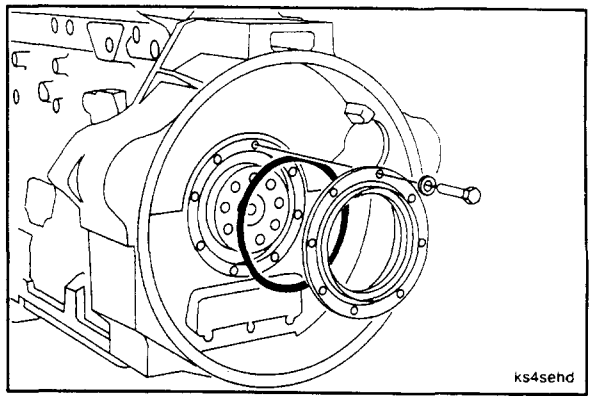

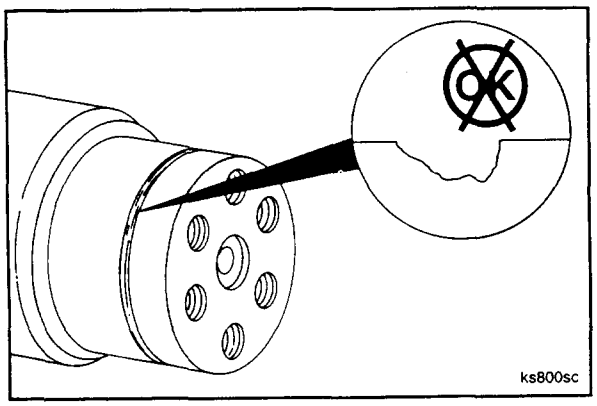


## Check For Reuse

1. Check for damage on the crankshaft in the seal location. If the crankshaft is grooved, install a repair sleeve. Refer to the Alternate Repair Manual.

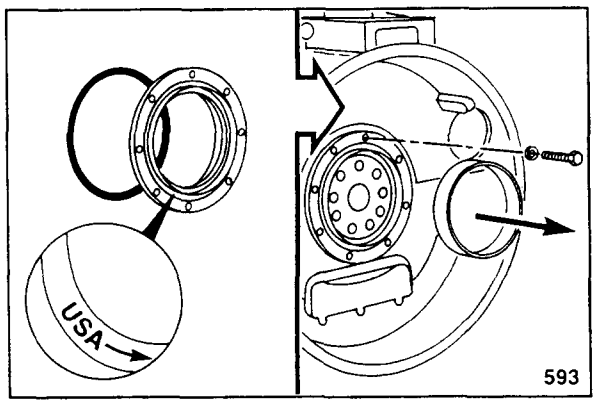


## Install

**Note:** Do not lubricate. The seal and seal surface of the crankshaft must be clean and dry.

1. Lubricate the o-ring (1) with vegetable oil and install the o-ring on the seal housing.

**Note:** The seal must be positioned as shown after assembly.

2. Put the installation sleeve on the crankshaft. Push the seal over the sleeve and on the crankshaft.

   Remove the sleeve. Install the plain washers and the self-sealing, captive capscrews. Tighten the capscrews to 11 N•m [95 in-lb].

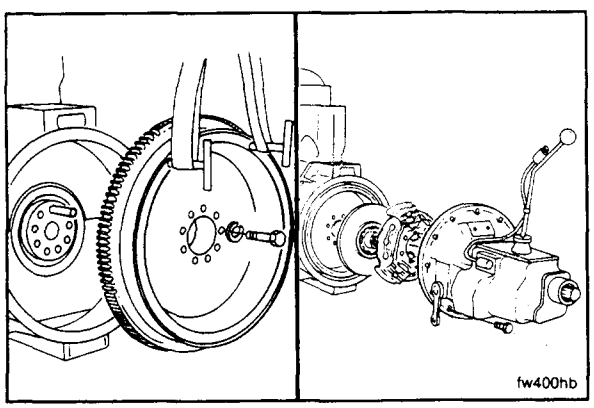


3. Install the flywheel. Refer to Procedure 07-52.
4. Install the transmission, clutch, and all related components. Refer to the equipment manufacturer's instructions.

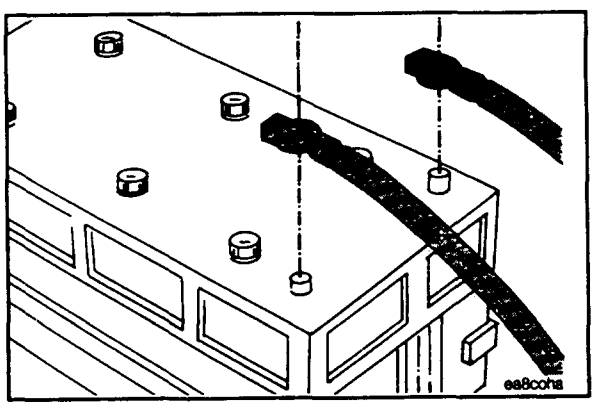


# Flywheel Housing - Replace (07-54)

## Remove

Disconnect the batteries and starter air to prevent accidental engine starting.

1. Remove the transmission, clutch, and all related components. Refer to the equipment manufacturer's instructions.
2. Remove the flywheel. Refer to Procedure 07-52.

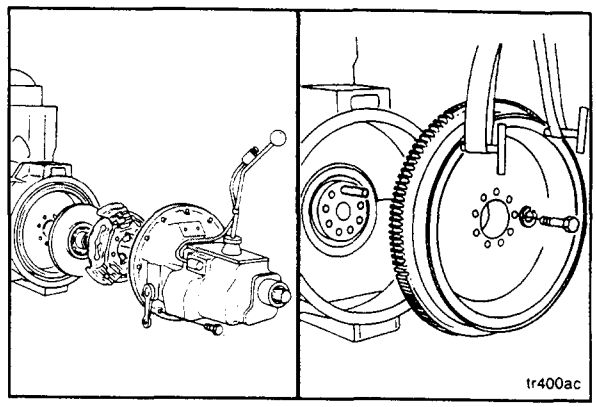


**Note:** Drain the oil when the oil temperature is approximately 60°C [140°F].

**Caution: Hot oil can cause minor injury.**

3. Remove the drain plugs from the sump and adapter cover. Drain the oil. Replace the copper washers and plugs. Tighten the capscrews to 100 N•m [75 ft-lb].

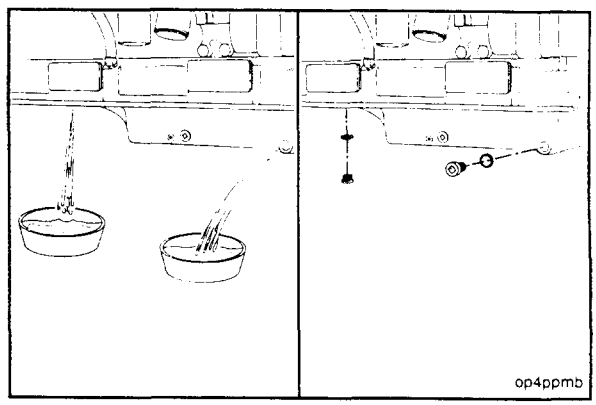


4. Remove the capscrews and the rear crankshaft seal. Remove and discard the o-ring.

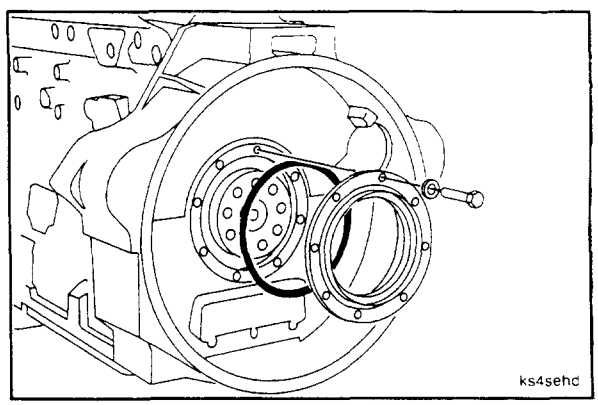


5. Remove the starting motor capscrews, the starter, the spacers, and the gaskets. Discard the gaskets.

   **Note:** All engines do not contain spacers and gaskets.

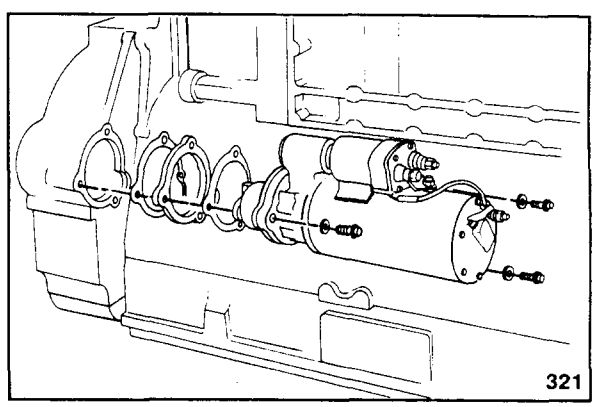

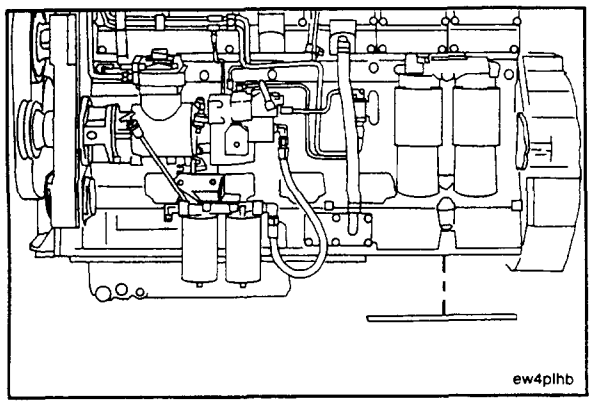


6. Remove the adapter cover plate or oil sump (which ever is in the rear position).

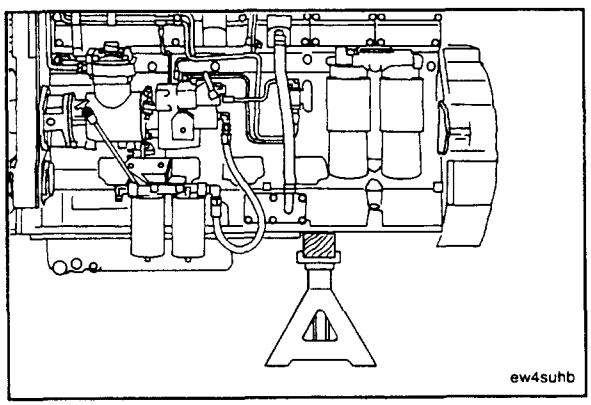


7. Place a wooden block the width of the oil pan adapter between the floor jack and the oil pan adapter to prevent damage to the engine.

   Use a floor jack or a suitable lifting fixture to support the rear of the engine. Place the support in position to allow access to the capscrews in the oil pan adapter that attach to the flywheel housing.

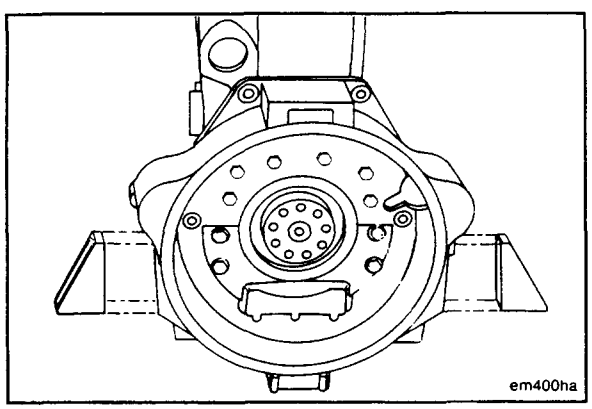


8. Remove the rear engine mounts from the flywheel housing.

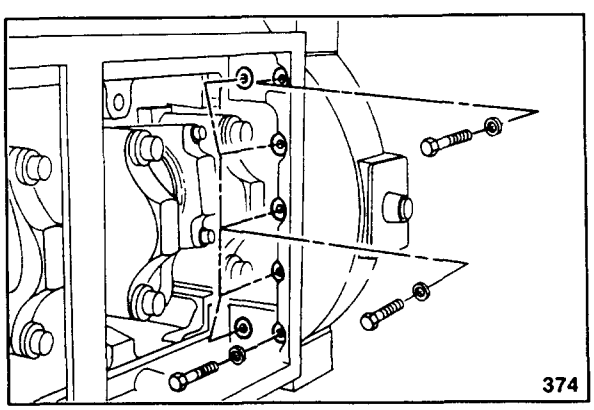


9. Remove the two 7/16-14 inch capscrews, and the five 3/8-16 inch capscrews from the flywheel housing.

**Caution: This part weighs more than 23 kg [50 lbs]. Personal injury can result.**

10. Use a guide stud. Remove one capscrew. Install the guide stud.

    Use a hoist, a tee handle, and a lifting sling. Install the tee handle. Adjust the hoist until there is tension in the lifting sling. Remove the remaining capscrews.

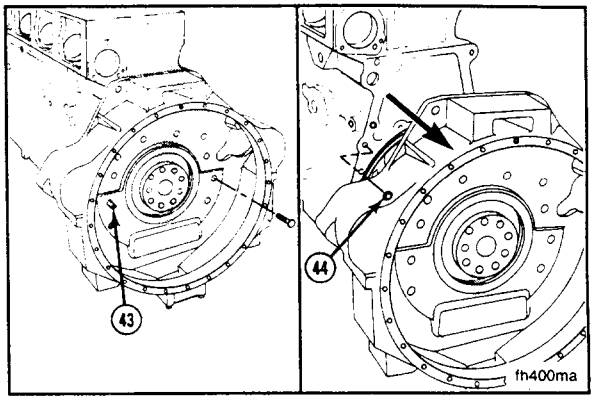


11. Using a mallet, tap the flywheel housing off of the two locating dowels. Remove and discard the rectangular seal and the bolt seals (44).

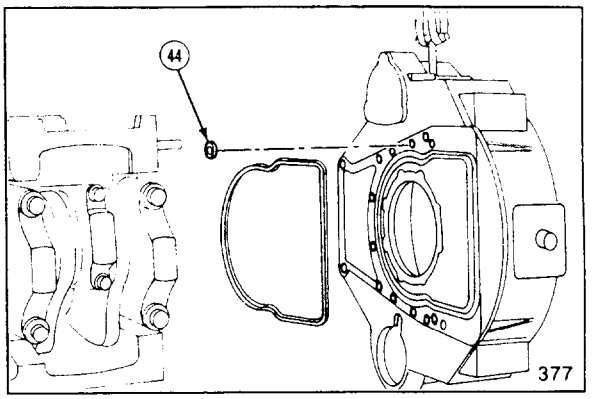


## Check For Reuse

1. Steam clean or use solvent to clean the housing and dry with compressed air.

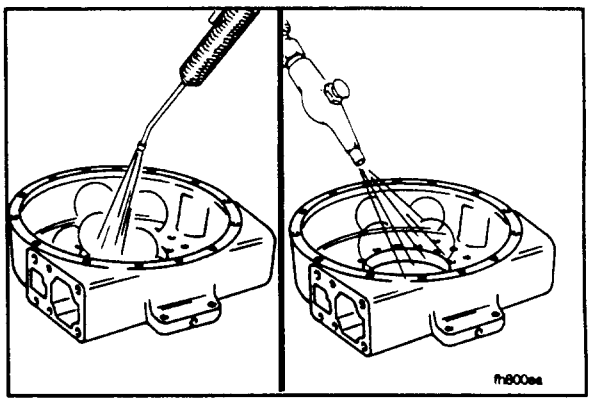


2. Visually inspect all surfaces for nicks, burrs or cracks. Use fine crocus cloth to remove small nicks and burrs.

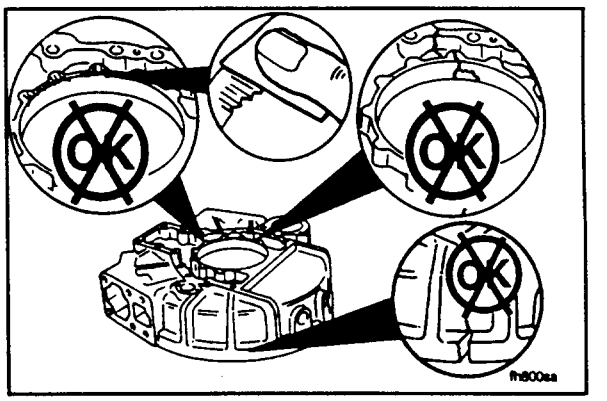

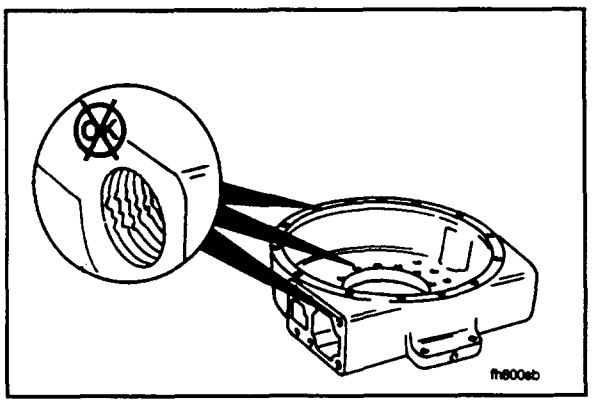


3. Inspect all threaded capscrew holes for damage. Repair or replace the housing if the capscrew holes are damaged.

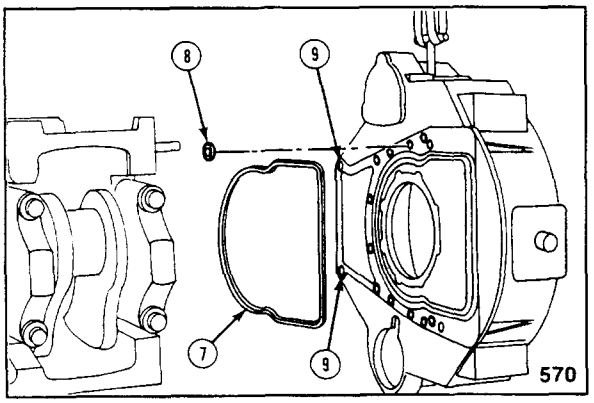


## Install

**Note:** Be sure the flywheel housing dowels have been installed in the block.

1. Install the sealing ring (7) in the groove on the housing. If a wet type housing is used, install the seals (8) in the counterbores as shown. The holes (9) do not require seals.
2. Use guide bolts to help during alignment. Install the housing and the capscrews.

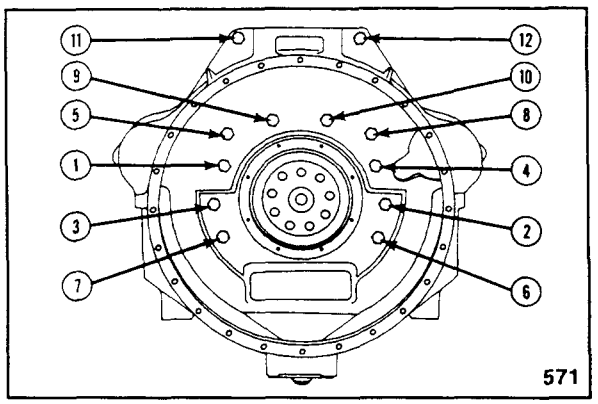


3. Use the following steps. Apply torque using the sequence shown.

| Flywheel Housing N•m | Capscrew Step | Torque Values ft-lb |
|---|---|---|
| 100 | 1 | 75 |
| 205 | 2 | 150 |

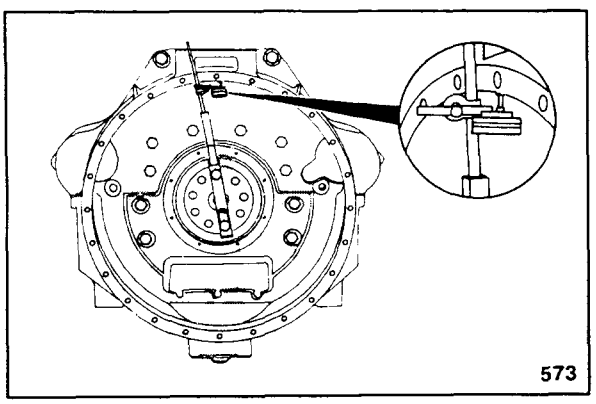


4. Measure the flywheel housing alignment.

**Note:** The bore and the face of the housing must be in alignment with the crankshaft.

**Note:** The indicator arm must be rigid for an accurate reading. It must not sag.

a. Attach an indicator to the crankshaft as shown.

b. Position the indicator at the 12 o'clock position. Adjust the dial until the needle points to "ZERO". Rotate the crankshaft one complete revolution (360 degrees). Record the TIR.

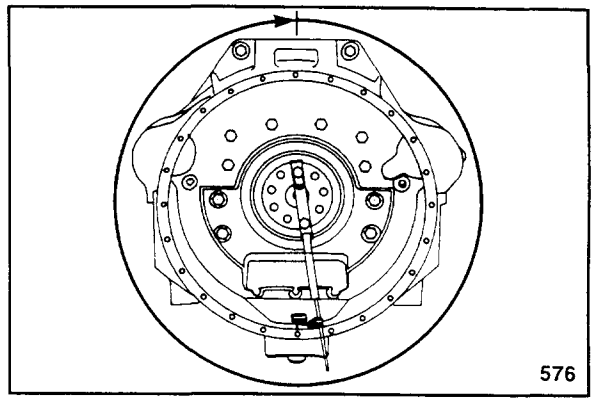


The maximum allowable TIR depends on the diameter of the bore.

| Bore Diameter MIN/MAX mm | Bore Diameter MIN/MAX in | SAE No. | Maximum TIR mm | Maximum TIR in |
|---|---|---|---|---|
| 787.4/810.5 | [31.00/31.91] | 00 | 0.30 | [0.012] |
| 647.7/648.0 | [25.50/25.51] | 0 | 0.25 | [0.010] |
| 584.2/584.4 | [23.00/23.008] | 1/2 | 0.25 | [0.010] |
| 511.2/511.3 | [20.125/20.130] | 1 | 0.20 | [0.008] |

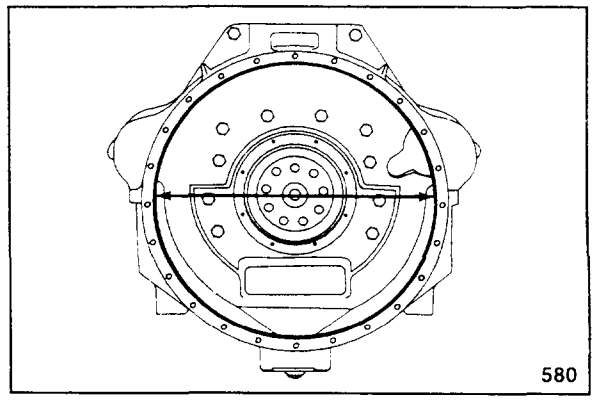


c. If the alignment is not within specifications and the bore is round, the housing can be shifted. Refer to Procedure 07-55.

d. If the alignment is not within specifications and the bore is not round, the housing must be replaced.

**Note:** The crankshaft end clearance must be pushed or pulled in the same direction each time a point is measured.

e. Attach an indicator as shown. Position the indicator at the 12 o'clock position. Adjust the dial until the needle points to "ZERO".

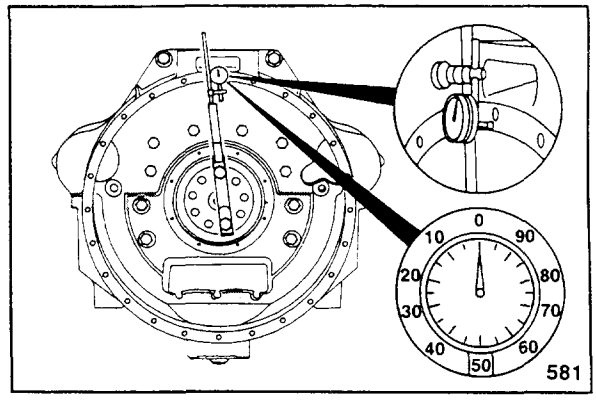

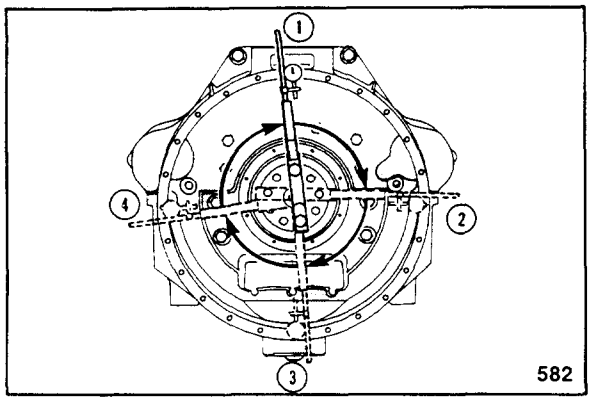


f. Record the indicator reading at three different points; 3 o'clock, 6 o'clock, and 9 o'clock.

g. Turn backward to the original position. Be sure the needle still points to "ZERO". Determine the total indicator run out (TIR).

| | mm | in |
|---|---|---|
| Example: | | |
| 12 o'clock | 0.00 | [ 0.00] |
| 3 o'clock | +0.08 | [+0.003] |
| 6 o'clock | - 0.05 | [- 0.002] |
| 9 o'clock | +0.08 | [+0.003] |
| Equal TIR | 0.13 | [ 0.005] |

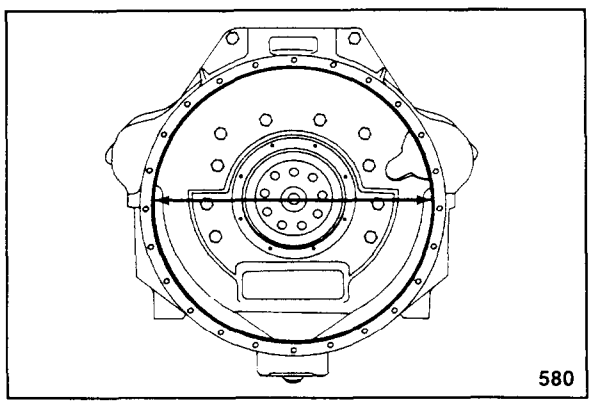


The maximum allowable TIR depends on the diameter of the bore.

| Bore Diameter | | | Maximum TIR | |
|---|---|---|---|---|
| MIN/MAX mm | MIN/MAX in | SAE No. | mm | in |
| 787.4/810.5 | [31.00/31.91] | 00 | 0.30 | [0.012] |
| 647.7/648.0 | [25.50/25.51] | 0 | 0.25 | [0.010] |
| 584.2/584.4 | [23.00/23.008] | 1/2 | 0.25 | [0.010] |
| 511.2/511.3 | [20.125/20.130] | 1 | 0.20 | [0.008] |

**Note:** If the alignment is not within specifications, remove the housing. Check for nicks, burrs, or foreign material between the block and the housing. Check the alignment again. If the alignment is not within specifications, the block or the housing is not machined correctly.

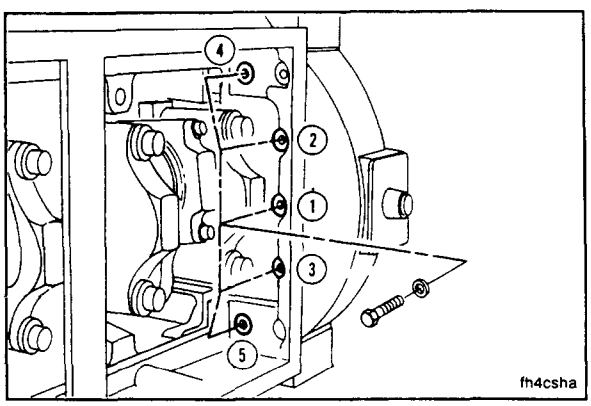


5. Use the following steps. Tighten the five 3/8-inch washers and capscrews in the sequence shown.

| Capscrew Torque Values | | |
|---|---|---|
| N•m | Step | ft-lb |
| 25 | 1 | 20 |
| 40 | 2 | 30 |
| 45 | 3 | 35 |

6. Install the two 7/16-inch washers and capscrews shown. Tighten the capscrews to 65 N•m [50 ft-lb].

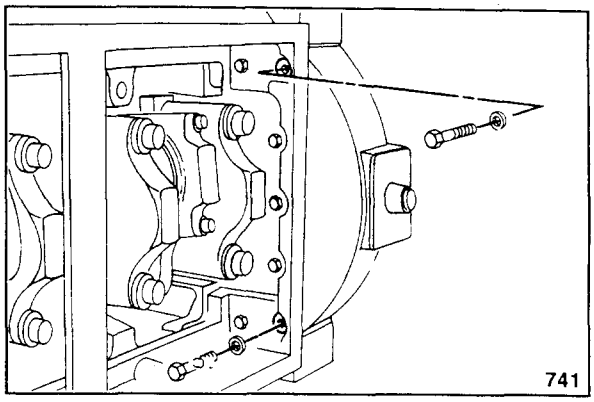


7. Install the flywheel housing mounting capscrews. Tighten the capscrews to 205 N•m [150 ft-lb].

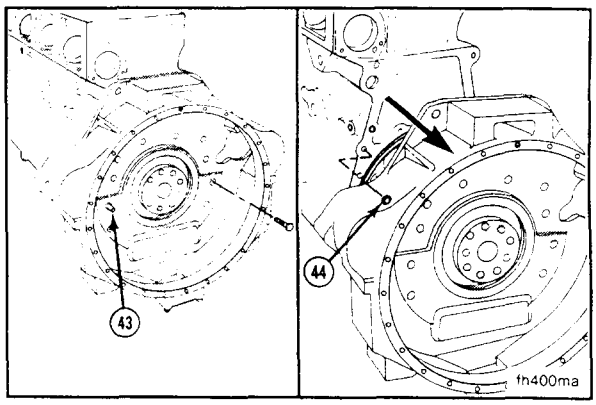


**Note:** Gasket cement will prevent the gasket from sealing properly. Use a contact adhesive such as 3M Spray 77 or 3M 1463 to hold the gasket in position.

8. Install the gasket, oil plate (or sump), washers, and capscrews.

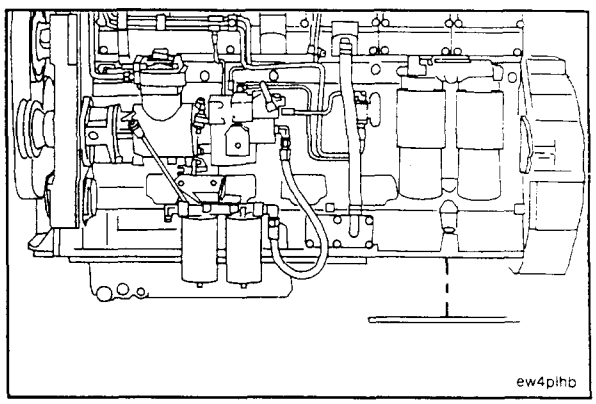


9. Tighten the capscrews in the sequence shown. Tighten the capscrews to 45 N•m [35 ft-lb].

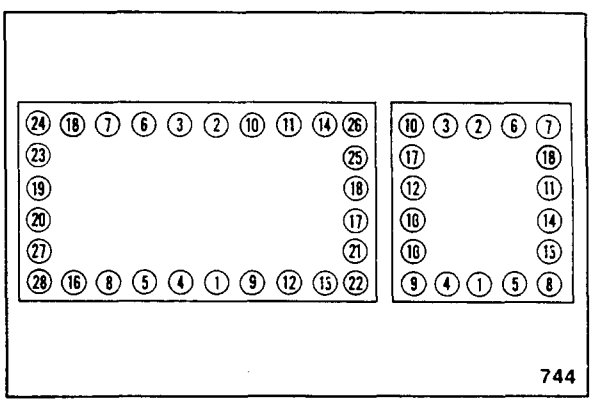

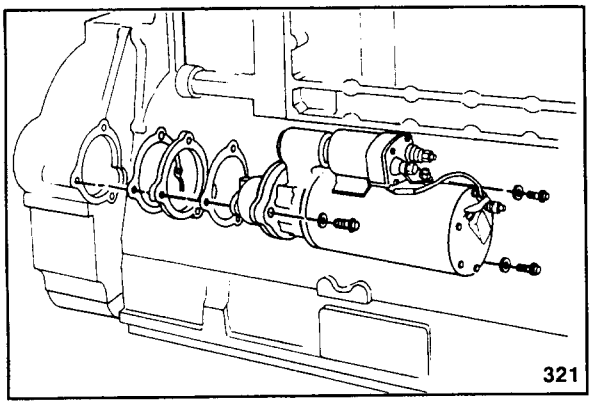


**Note:** Starting motor spacers are not on all engines.

**Note:** The wet type flywheel housing requires gaskets for starting motor installation.

10. Install any spacer or gaskets. Install the starting motor and the capscrews.

| Starting Motor Torque Value | | |
|---|---|---|
| Flywheel Housing | N•m | ft-lb |
| Cast Iron: | 215 | 160 |
| Aluminum: | 195 | 145 |

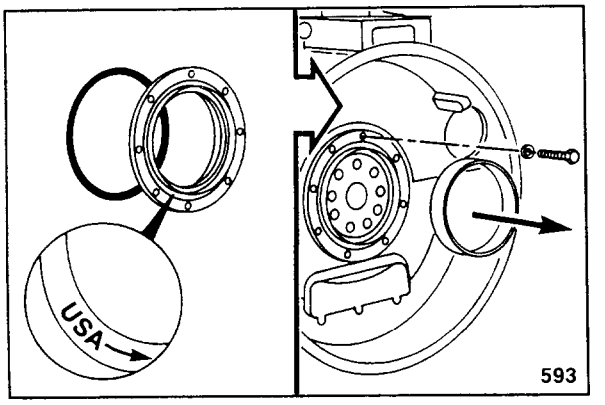


**Note:** Do not lubricate. The seal and seal surface of the crankshaft must be clean and dry.

Lubricate the o-ring (1) with vegetable oil. Install the o-ring on the seal housing.

**Note:** The seal must be positioned as shown after assembly.

11. Put the installation sleeve on the crankshaft. Push the seal over the sleeve and on the crankshaft. Remove the sleeve.
12. Install theplain washers and the self-sealing, captive capscrews. Tighten the capscrews to 11 N•m [95 in-lb].

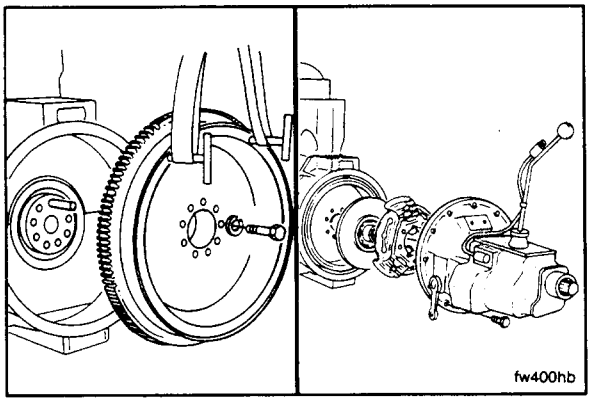


13. Install the flywheel. Refer to Procedure 07-52.
14. Install the transmission, clutch, and all related components. Refer to the equipment manufacturer's instructions.

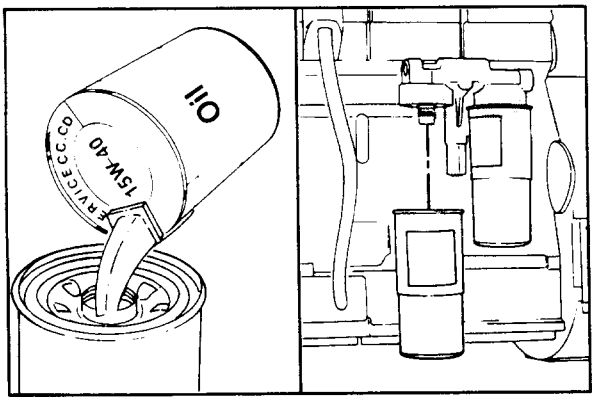


15. Install new full flow oil filters. Refer to Procedure 02-11.

16. Fill the engine with oil. Refer to Procedure 02-10 for engine oil capacity.

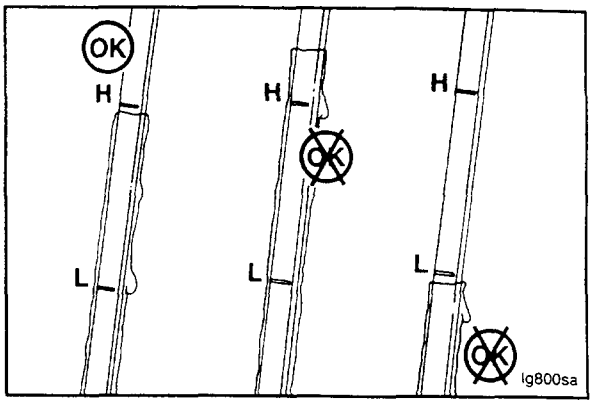


17. Connect the batteries and starter air to allow engine starting.

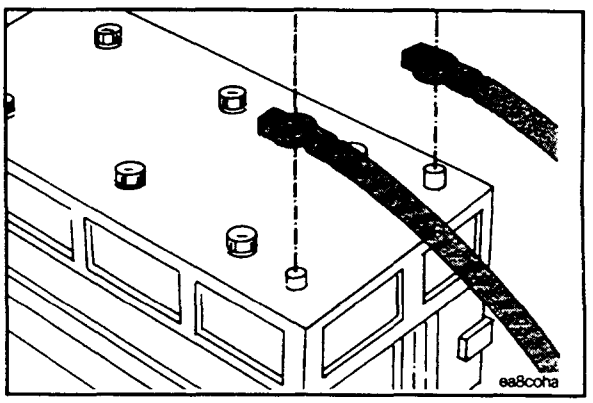


18. Operate the engine to operating temperature. Check for leaks. Check equipment operation.

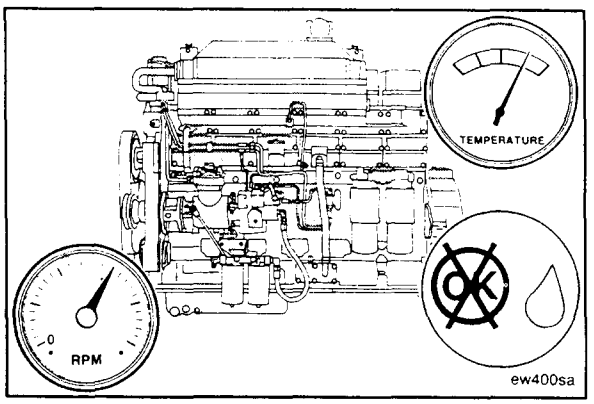


## Flywheel Housing Redowel To Cylinder Block (07-55)

1. The tools needed to perform this procedure are:

Drill Ream Fixture, Part No. ST-1232 that contains:
(1) Plate, Part No. ST-1232-1
(2) Locator pin, Part No. 3375052
(3) Spacer wahser, Part No. St-1232-2

| | |
|---|---|
| (4) Drill/Ream Bushing Set | Actual sizes depend on the dowel size. Details on Page ____ |
| (5) Drill Adapter | Locally obtained; use to adapt open-1shank reamers to drill-chuck |
| (6) Reamer | Locally obtained |
| (7) Drill Bit | Locally obtained |

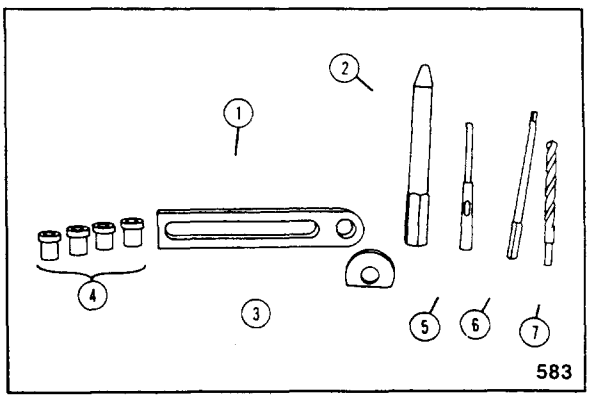

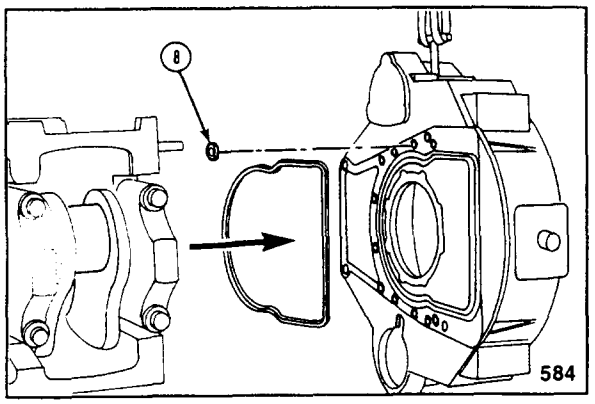


2. Remove the flywheel housing (9). Remove the rectangular seals (8). If necessary, refer to Procedure 07-54 for additional details.

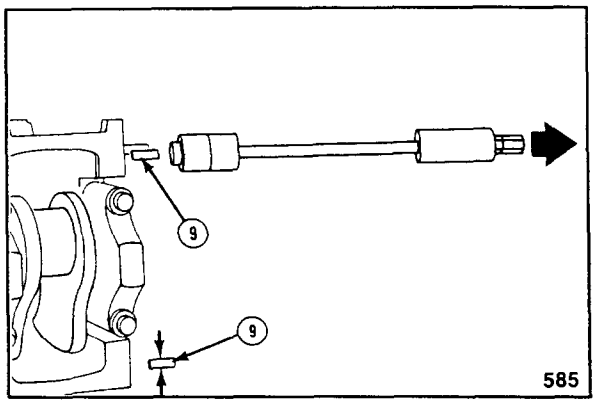


3. Use a dowel pin extractor, Part No. ST-1134, or equivalent. Remove the two dowels (9) from the block.
4. Measure a dowel pin that is removed so that an oversize dowel pin can be determined.

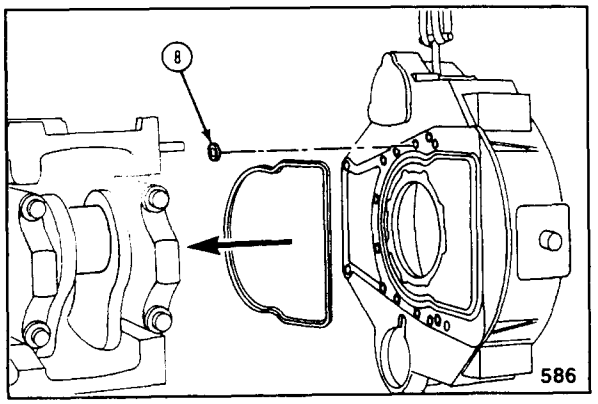


**Note:** Do not torque the capscrews. The flywheel housing must be aligned first.

5. Install the seals (8) in the flywheel housing. If necessary, refer to Procedure 07-54 for additional details.

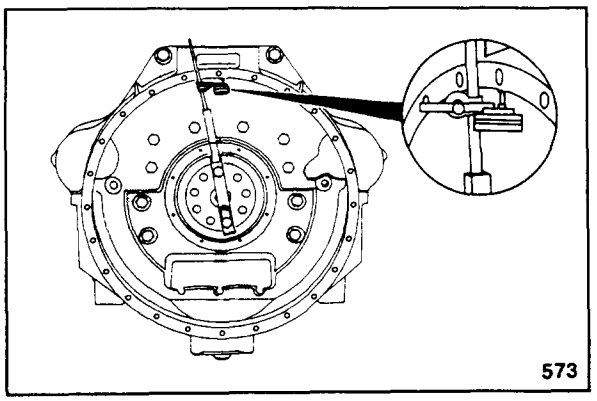


6. Align the flywheel housing to the crankshaft. Refer to Procedure 07-54 for the procedure to measure the housing alignment.
7. Move the housing with a mallet until the bore is within specification. Check to be sure that the face of the housing is in alignment. When the housing is in alignment, tighten the capscrews. Refer to Procedure 07-54 for the capscrew torque.
8. After the capscrews are torqued, check the alignment again.

9. Use the appropriate size capscrews. Attach the plate, Part No. ST-1232-1, which is contained in Part No. ST-1232 Drill Ream Fixture.
10. Hand tighten the capscrews so the plate can be moved.

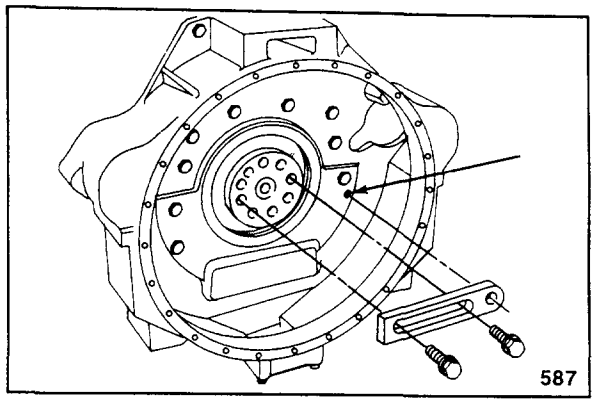


11. Use the locator pin to align the plate with the hole for the dowel pin. Tighten the capscrews. The taper on the pin must engage the dowel pin hole.
12. The locator pin must rotate easily after the capscrews are tightened.

**Caution: If the crankshaft is not "LOCKED" in position, it can turn during reaming.**

13. "LOCK" the crankshaft in position. Check to be sure the locator pin is still in alignment and that the locator pin can be rotated easily.

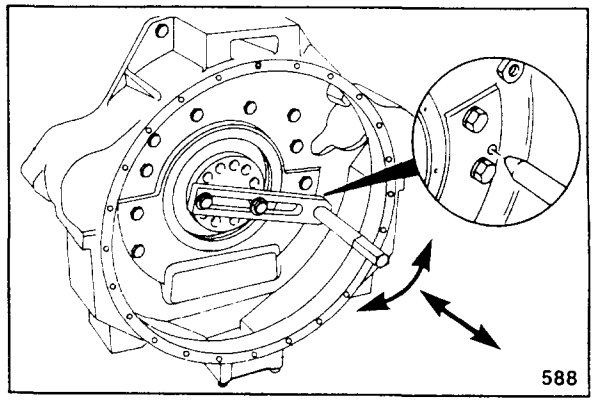


14. Measure the dowel pins to be installed.
15. Obtain a reamer (5) that is 0.013 mm to 0.02 mm [0.0005 inch to 0.001 inch] smaller than the dowel.
16. The dowel must be long enough to protrude from the block one-half of the flywheel housing wall thickness.

**Note:** There are three oversize dowel pins available from Cummins Engine Co.,Inc.:

| Oversize Dowel Pin O.D. | | |
|---|---|---|
| mm | Oversize | in |
| 13.08 | 0.015 | 0.515 |
| 13.46 | 0.030 | 0.530 |
| 13.84 | 0.045 | 0.545 |

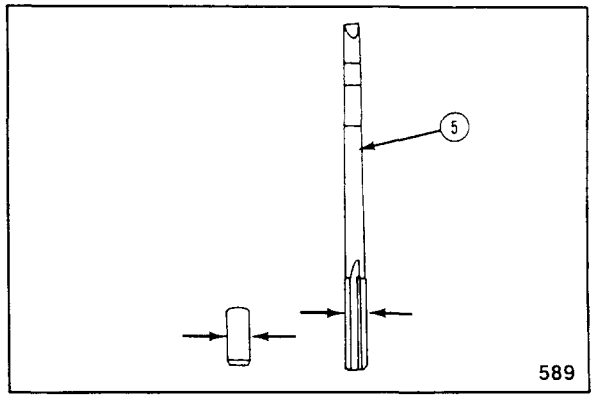

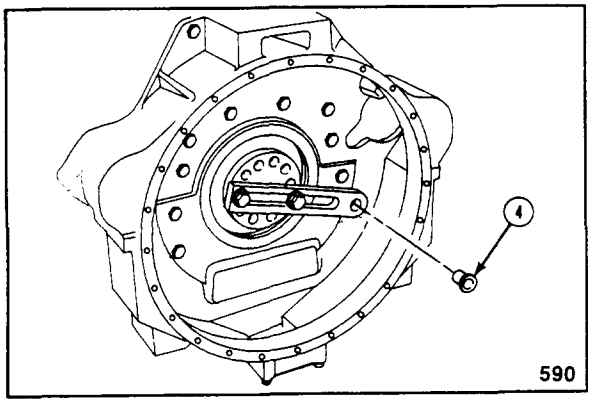


17. Install the appropriate drill bushings (4). The table shows the bushings available from Cummins Engine Co., Inc.

| Drill/Ream Bushing Sets - 25.4 mm [1 inch] O.D. | | | |
|---|---|---|---|
| Oversize | | Bushing Size | |
| mm | inch | mm | inch |
| 3376495 | Special | 12.304 | [0.4844] |
| | Standard | 12.700 | [0.5000] |
| 0.38 | [0.015] | 13.096 | [0.5156] |
| 0.76 | [0.030] | 13.494 | [0.5312] |
| 1.14 | [0.045] | 13.879 | [0.5464] |
| ST-1234 | Standard | 14.288 | [0.5625] |
| 0.38 | [0.015] | 14.684 | [0.5781] |
| 0.76 | [0.030] | 15.081 | [0.5937] |
| 1.14 | [0.045] | 15.478 | [0.6094] |
| ST-1235 | Standard | 15.875 | [0.6250] |
| 0.38 | [0.015] | 16.272 | [0.6406] |
| 0.76 | [0.030] | 16.669 | [0.6562] |
| 1.14 | [0.045] | 17.066 | [0.6719] |
| ST-1236 | Standard | 17.463 | [0.6875] |
| 0.38 | [0.015] | 17.859 | [0.7031] |
| 0.76 | [0.030] | 18.256 | [0.7187] |
| 1.14 | [0.045] | 18.653 | [0.7344] |
| ST-1237 | Standard | 19.050 | [0.7500] |
| 0.38 | [0.015] | 19.447 | [0.7656] |
| 0.76 | [0.030] | 19.844 | [0.7812] |
| ST-1238 | | 22.621 | [0.8906] |
| | | 21.093 | [0.9375] |

The drill bushing that is used must be the same size as the reamer (or the drill) that is used.

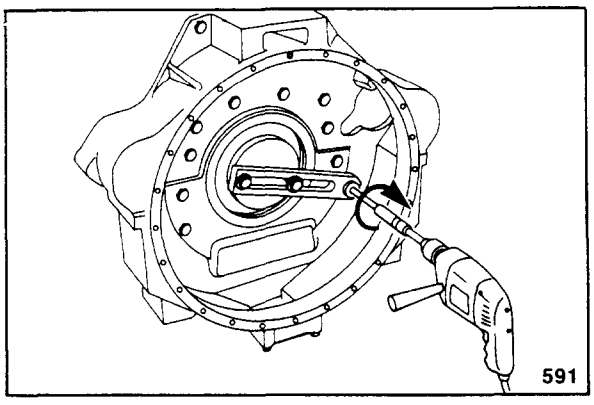


18. If the new dowel pins are more than 0.38 mm [0.015 inch] larger than the old dowels, drill the hole to a size that is slightly smaller than the reamer. Then the reamer will not have to remove an excessive amount of material.

**Caution: Do not allow metal chips to enter the engine. Damage to the engine will result.**

19. Ream the hole until the reamer touches the bottom of the hole in the block.

20. Remove the reamer. Clean the hole and run the reamer through the hole again. The reamer must touch the bottom of the hole in the block.

21. After reaming one hole, turn the plate and align it with the second dowel hole. Repeat the procedure in the second hole.

22. Remove the plate from the crankshaft.

**Caution: Be sure the dowel hole does not contain any metal chips. Engine damage will result.**

23. Use a square nose drift. Drive each dowel in until it touches the bottom of the hole in the block.

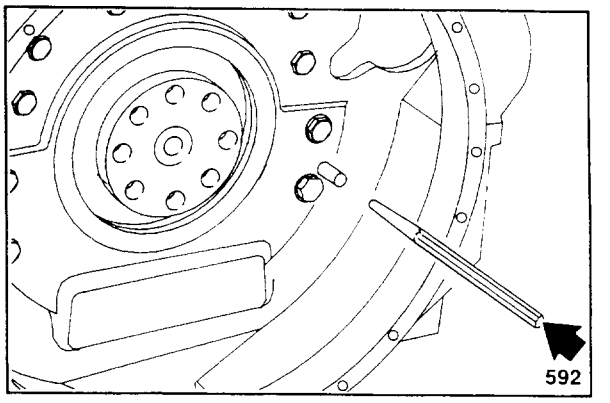


24. After the dowels are installed, measure the bore and the face alignment again. Refer to the instructions in Procedure 07-54.

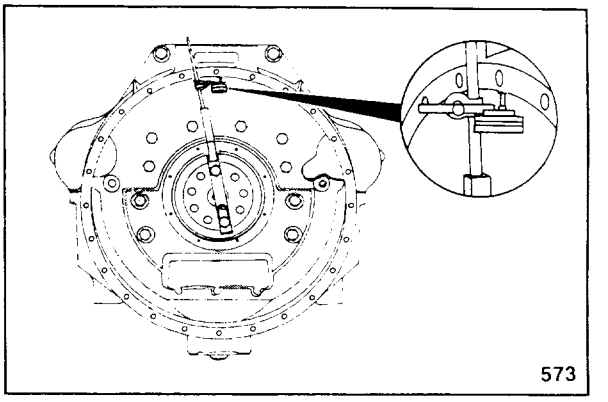


# Pipe Plugs And Cup Plugs - Replace (07-56)

## Pipe Plugs - Remove

1. Select the appropriate size alien wrench and remove the pipe plug.

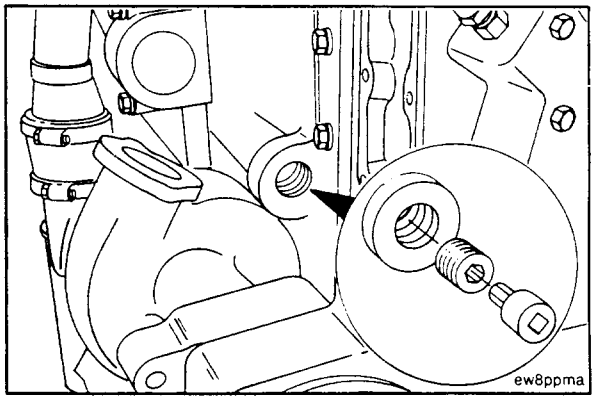


## Pipe PLugs - Check For Reuse

1. Use solvent to clean the threads of the pipe plug and the threaded bore.

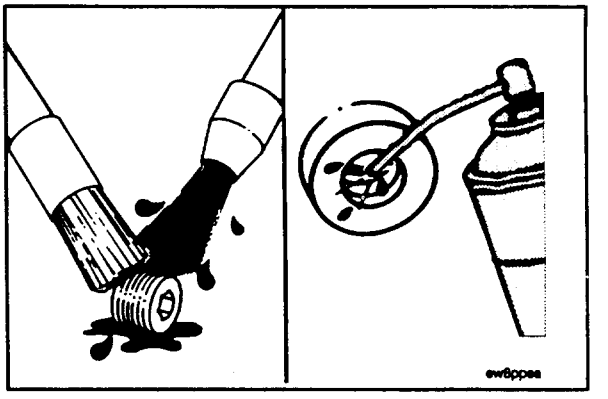

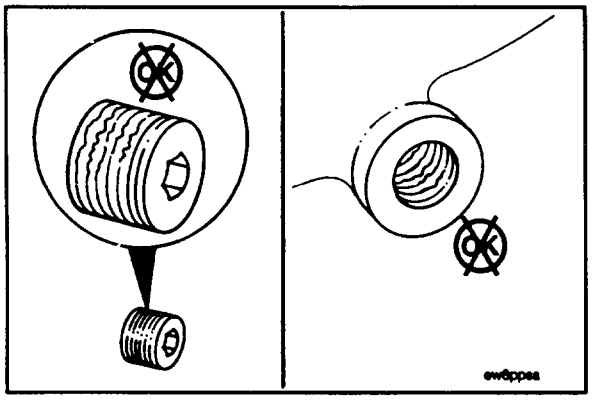


2. Visually inspect the threads of the pipe plugs for damage.
3. Visually inspect the threaded bores for damage.
4. Repair the bores if necessary. Refer to the Alternative Repair Manual.

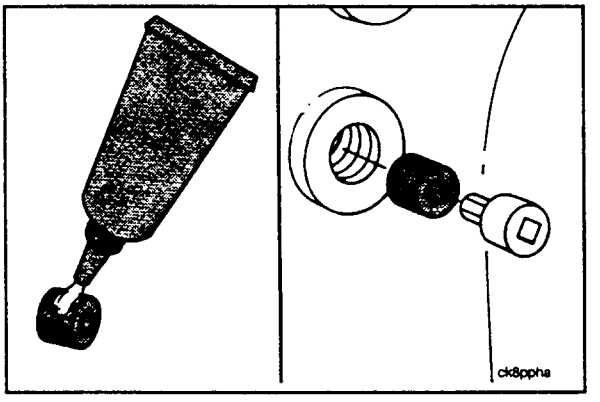


## Pipe Plugs - Install

1. Apply a film of pipe sealant, Part No. 3375066, or equivalent to the threads.
2. Install and tighten the pipe plugs.
3. Refer to the following chart for torque values.

| PIPE PLUG TORQUE VALUES | | | |
|---|---|---|---|
| SIZE Thread | O' all OD | Torque in Aluminum | Torque in Cast Iron or Steel |
| 1.6 mm [1/16 in.] | 8.1 mm [0.32 in.] | 4-5 Nm [40-45 in.-lbs.] | 10-15 Nm [5-10 ft.-lbs.] |
| 3.2 mm [1/8 in.] | 10.4 mm [0.41 in.] | 10-15 Nm [5-10 ft.-lbs.] | 15-20 Nm [10-15 ft.-lbs] |
| 6.4 mm [1/4 in.] | 13.7 mm [0.54 in.] | 15-20 Nm [10-15 ft.-lbs.] | 20-25 Nm [15-20 ft.-lbs.] |
| 9.5 mm [3/8 in.] | 17.3 mm [0.68 in.] | 20-25 Nm [15-20 ft.-lbs.] | 30-35 Nm [20-25 ft.-lbs.] |
| 12.7 mm [1/2 in.] | 21.6 mm [0.85 in.] | 30-35 Nm [20-25 ft.-lbs.] | 50-55 Nm [35-40 ft.-lbs.] |
| 19.1 mm [3/4 in.] | 26.7 mm [1.05 in.] | 40-45 Nm [30-35 ft.-lbs.] | 70-75 Nm [50-55 ft.-lbs.] |
| 25.4 mm [1 in.] | 33.5 mm [1.32 in.] | 55-60 Nm [40-45 ft.-lbs.] | 90-95 Nm [65-70 ft.-lbs.] |
| 31.8 mm [1-1/4 in.] | 42.2 mm [1.66 in.] | 70-75 Nm [50-55 ft.-lbs.] | 110-115 Nm [80-85 ft.-lbs.] |
| 38.1 mm [1-1/2 in.] | 48.3 mm [1.90 in.] | 80-85 Nm [60-65 ft.-lbs.] | 130-135 Nm [95-100 ft.-lbs.] |

4. Tighten the pipe plugs to the torque values shown.

**Note:** The accompanying chart is also provided in Chapter 10 "Engine Component Specifications".

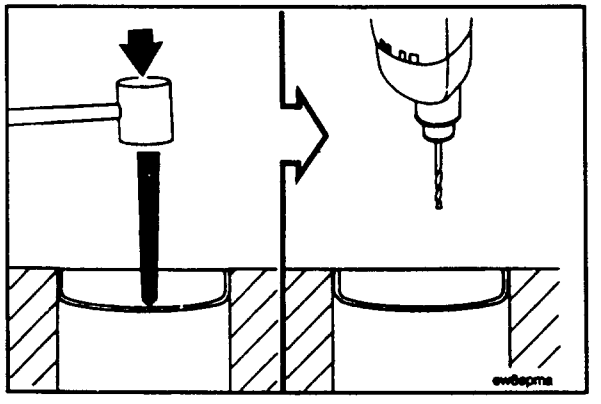


## Cup Plugs - Remove

1. Use a center punch to mark the cup plug for drilling.

**Caution: Do not allow metal shavings to fall into the engine when drilling the hole in the cup plug.**

2. Drill a 1/8 inch hole in the cup plug.

3. Use a dent puller to remove the plug.

**NOTE:** Discard used cup plugs. Do not use them again.

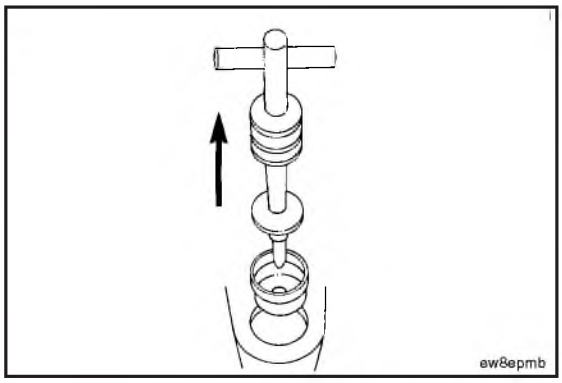


## Cup Plugs - Check for Reuse

1. Clean the cup plug bores. Lightly scrape the bore with a gasket scraping tool to remove any corrosion, carbon, or sealant buildup.

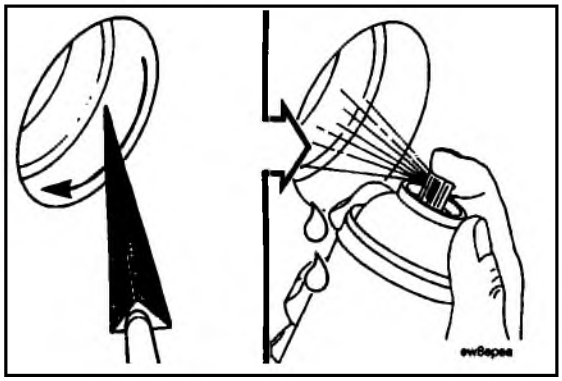

2. Visually inspect the bores for damage.
3. Repair the bore if necessary. Refer to the Alternative Repair Manual.

**NOTE:** Refer to Chapter 10, ''Engine Component Specifications'' for cylinder block cup plug bore dimensions and cup plug dimensions.

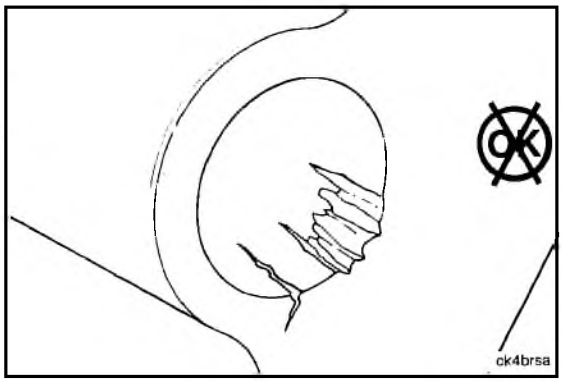


## Cup Plug - Install

**Caution: Do not install a used cup plug.**

1. Apply a film of pipe plug sealant, Part No. 3375068, to the outside diameter of the plug.

**Caution: Allow the cup plug sealant to dry fro a minimum of 2 hours before operating the engine. The plug can come out if the sealant is not dry.**

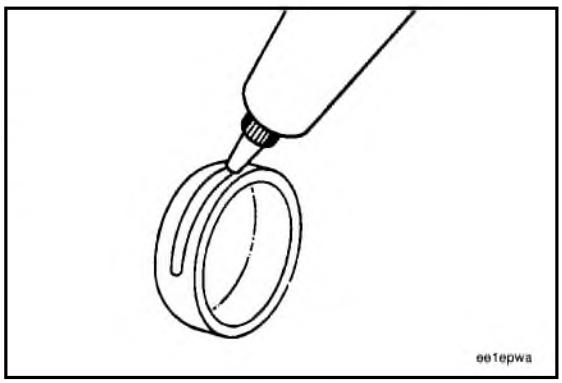

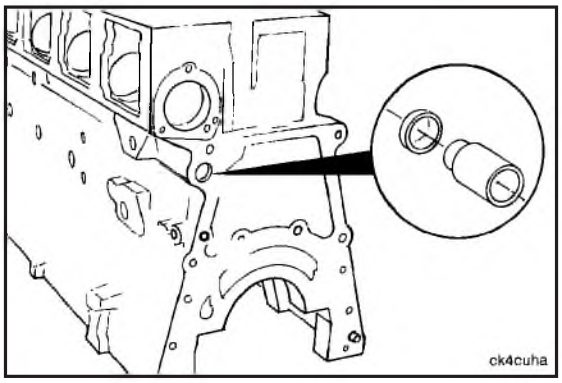


2. Use one of the following plug drivers and install the plug.

| Plug Driver Part No. | Cup Plug Size |
|---|---|
| 3376794 | [0.375 inch] |
| 3376048 | [0.38 inch] |
| 3376793 | [0.50 inch] |
| 3376813 | [0.875 inch] |
| 3376816 | [1.00 inch] |
| 3376812 | [1.235 inch] |
| 3376814 | [1.625 inch] |
| 3376058 | [2.38 inch] |

**NOTE:** Use Part No. 3376795 cup plug driver handle with the cup plug driver.

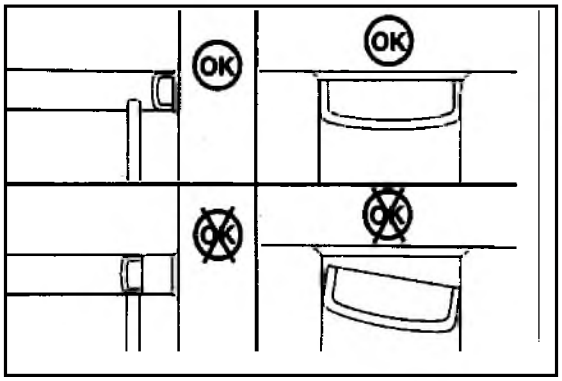


**Caution: The plug must be installed so the edge of the plug is deeper than the leading chamfer of the bore.**

**Caution: Do not install the plug too deep. Cross drillings in the cylinder block may be blocked. If the plug is not installed straight and flat, it must be replaced with a new cup plug.**

# Section 08 - Engine Testing - ("In-Chassis")

## Table of Contents


| | Procedure No. | Page No. |
|---|---|---|
| General Engine Test Specifications and Procedures | 08-01 | 8-2 |
| Chassis Dynamometer Operation | 08-02 | 8-5 |
| Engine Run-In Procedure (Chassis Dynamometer) | 08-03 | 8-7 |
| Engine Run-In Procedure "In-Chassis" - (On and Off-Highway Vehicles) | 08-04 | 8-10 |
| Engine Configurations and Models | 08-05 | 8-12 |

# General Engine Test Specifications and Procedures (08-01)

Maintain the following limits during a chassis dynamometer test:

**Air Inlet Restriction (Maximum at Rated Speed and Load):**

Clean Filter ..... 380 mm $H_20$ [15 in $H_20$]

Dirty Filter ..... 635 mm $H_20$ [25 in $H_20$]

**Exhaust Back Pressure** ..... 75 mm Hg [3 in Hg]

**Engine Blow-by* (7.67 mm [0.302 inch] Orifice):**

KTTA All - Ratings ..... 508 mm $H_20$ [20 in $H_20$]

KTA - 2000 and ''Above'' RPM ..... 355 mm $H_20$ [14 in $H_20$]

KTA - 1200 to 1900 RPM ..... 305 mm $H_20$ [12 in $H_20$]

KT - 2000 and ''Above'' RPM ..... 254 mm $H_20$ [10 in $H_20$]

KT - 1500 to 1900 RPM ..... 203 mm $H_20$ [8 in $H_2$]

**Engine Blow-by* (9mm [0.354 inch] Orifice):**

KTTA - All Ratings ..... 229 mm $H_20$ [9 in $H_20$]

KTA - 2000 and ''Above'' RPM ..... 203 mm $H_20$ [8 in $H_20$]

KTA - 1200 to 1900 RPM ..... 178 mm $H_20$ [7 in $H_20$]

KT - 2000 and ''Above'' RPM ..... 152 mm $H_20$ [6 in $H_20$]

KT - 1500 to 1900 RPM ..... 127 mm $H_20$ [5 in $H_20$]

**Engine Blow-by* (10.3 mm [0.406 inch] Orifice):**

KTTA - All Ratings ..... 127 mm $H_20$ [5 in $H_20$]

**Oil Pressure**

Low Idle (Minimum Allowable) ..... 138 kPa [20.0 psi]

At Rated RPM (Minimum Allowable) ..... 345 kPa [50 psi]

**Fuel Filter Restriction (Maximum)**

Clean Filter ..... 100 mm Hg [4.0 in Hg]

Dirty Filter ..... 200 mm Hg [8.0 in Hg]

**Fuel Return Restirction (Maximum)** ..... 64 mm Hg [2.5 in Hg]

*These values are for new engines measured under full load at rated rpm.

# General Engine Test Procedures (08-01)

**Note:** The lubricating oil system must be primed before operating the engine after rebuild to avoid internal component damage. Do not prime the system from the bypass filter as the filter will be damaged.

**Note:** Some engines contain a straight thread fitting with an o-ring instead of a pipe plug.

1. Remove the large pipe plug from the oil cooler housing.

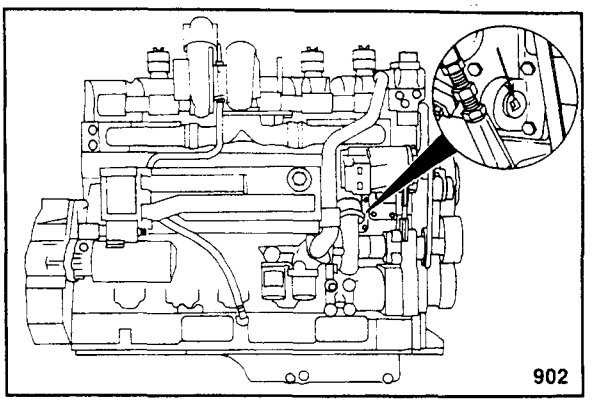


2. Use a pump capable of supplying 205 kPa [30 psi] continuous pressure. Connect the pump to the front of the engine oil cooler as shown.
3. Use a supply of clean oil. Turn the pump to the "ON" position. Check the engine oil pressure gauge. When the gauge indicates oil pressure, begin monitoring the oil level in the oil pan.

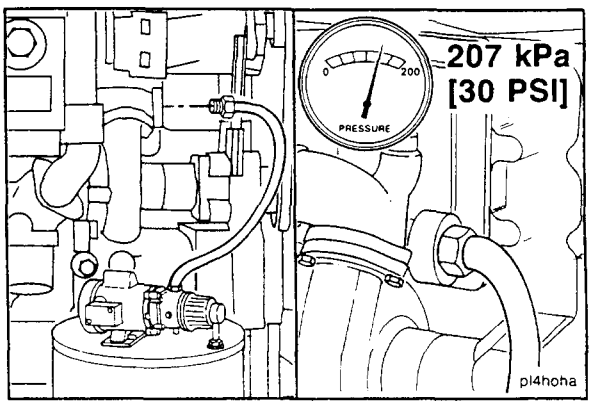


4. Fill the engine with the proper coolant. Refer to Procedure 01-07.
5. Refer to the "Engine Diagrams" in Section E for proper system pressure and temperature gauge connecting locations.

**Note:** The number of instruments and gauges will vary according to the type and capability of the test equipment used.

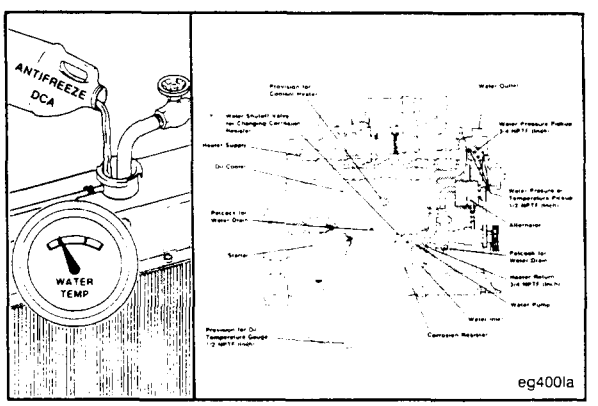


6. To properly monitor an engine's performance, record the following parameters:
   - Lubricating oil pressure
   - Water temperature
   - Water pressure
   - Fuel pressure
   - Fuel rate
   - Intake manifold pressure
   - Inlet air temperature
   - Blowby
   - Acceleration smoke
   - Engine speed (RPM)
   - Wheel horse power (WHP)
   - Load (Torque)

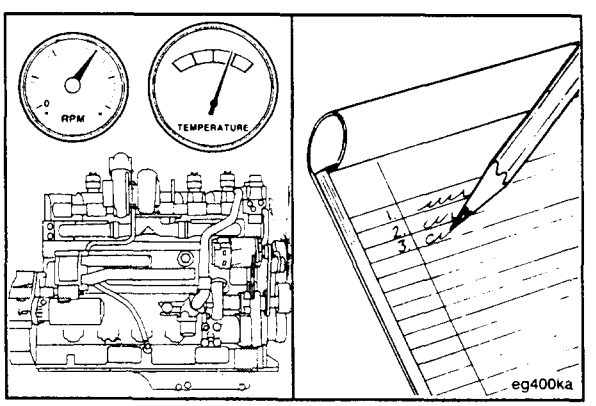

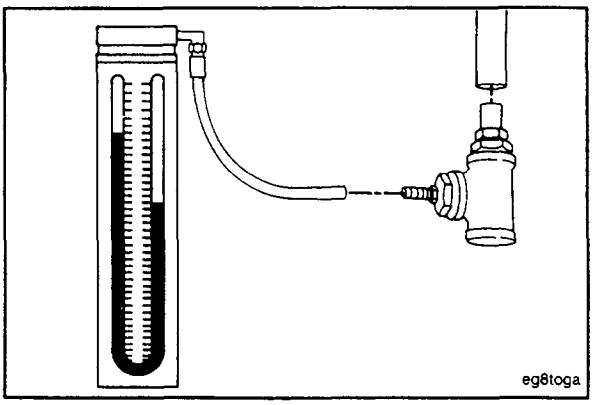


**Note:** Excessive blowby indicates a fan clutch, an air compressor, a turbocharger, or an internal engine component malfunction.

Use one of the three blow-by service tools and a manometer. The minimum gauge capacity must be 1270 mm-$H_2O$ [50 in-$H_2O$].

**Note:** The engine blow-by tools are similar in design. The difference between the tools is the size of the orifice.

| Blow-by Orifice Size | |
|---|---|
| Tool Part No. | mm [in] |
| 3375788 | 7.67 [0.302] |
| 3377143 | 9.0 [0.354] |
| 3377471 | 10.3 [0.406] |

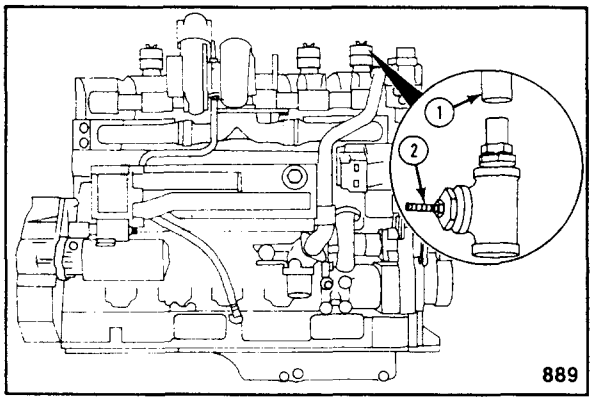


Use a length of hose (1) to attach the blow-by tool to one of the crankcase breathers. Plug all of the other breathers.

Attach a manometer to the location shown (2).

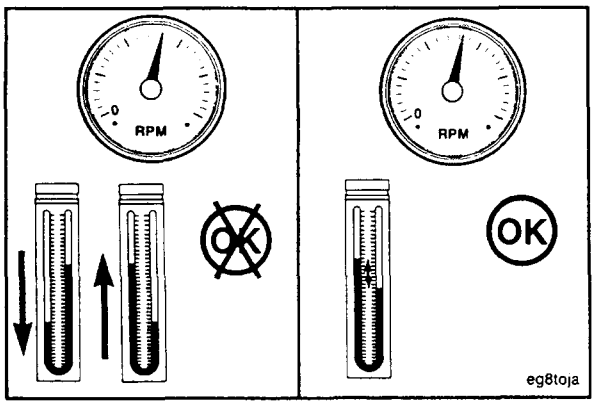


**Note:** If a sudden increase in blow-by occurs, or if blow-by exceeds the maximum allowable limitduring any run-in step, continue the run-in at that step. If blow-by does not reach an acceptable level, discontinue the run-in and determine the cause.

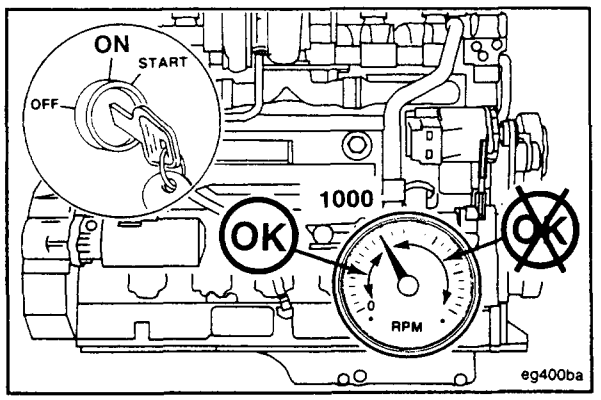


**Caution: Do not allow the engine speed to exceed 1000 RPM before run-in. The internal components can be damaged.**

**Caution: Do not shut the engine off immediately after the last step of the run-in is completed. Allow the engine to cool by operating at low idle for a minimum of 3 minutes to avoid internal component damage.**

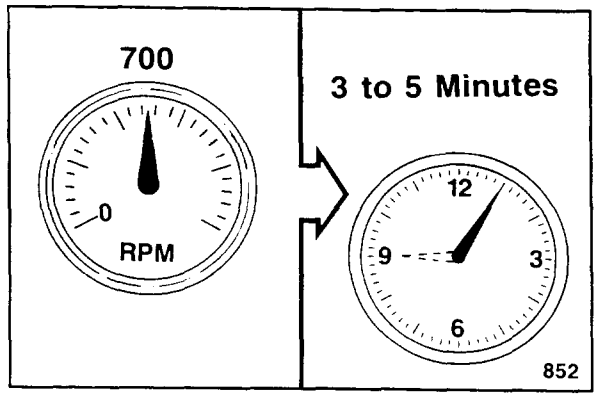


## Chassis Dynamometer Operation (08-02)

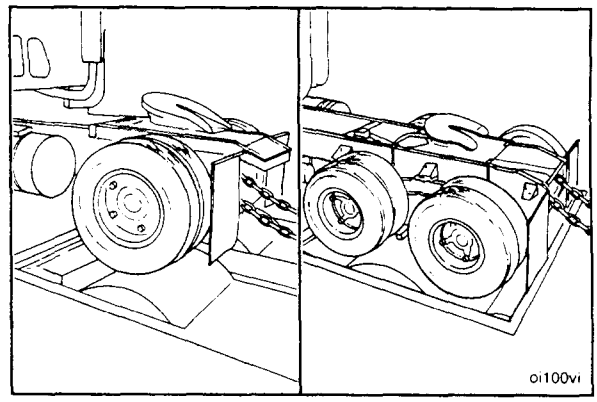


The performance of an engine installed in on-highway vehicles can be tested on a chassis dynamometer.

**Note:** Due to drive line efficiency and engine driven accessories, the wheel horsepower (WHP) will be reduced by approximately:

- 20% for single axle vehicles
- 25% for tandem axle vehicles

**Note:** These percentages are used for engine run-in only and are not to be used as absolute figures.

1. Before installing or operating a vehicle on a chassis dynamometer, be sure to follow all the vehicle manufacturer's safety precautions.

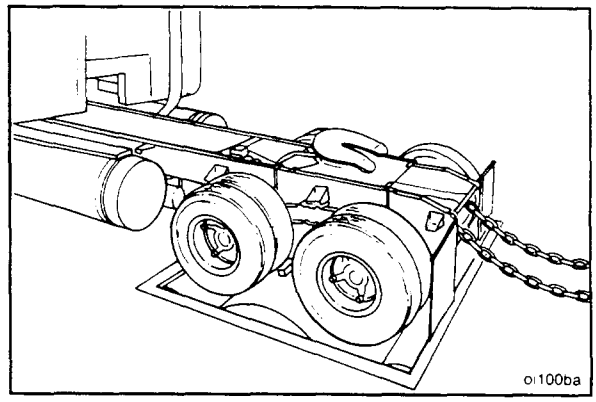


**Caution: Low Profile radial tires are more sensitive to heat than bias ply tires. Excessive operating time at full load can damage tires due to overheating. Be sure to check the tire manufacturer's recommendations for the maximum allowable chassis dynamometer operating time.**

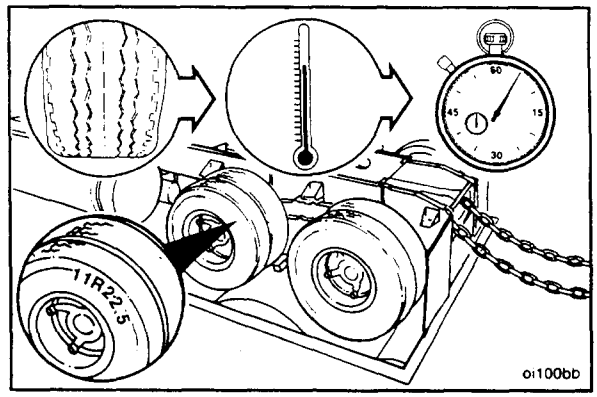

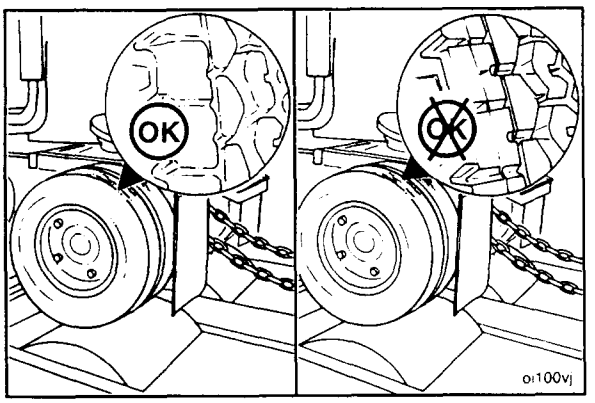


**Note:** The following are general safety precautions to be observed while operating the chassis dynamometer:

Never operate with tires that have been used less than 160 kilometers [100 miles]. New tires must be changed.

Never operate with recapped tires or tires of different sizes or designs.

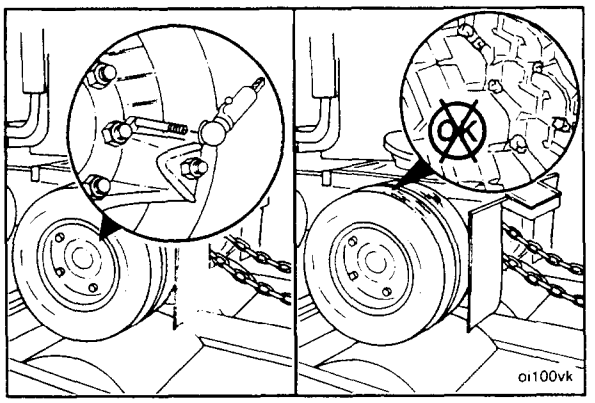


Make sure the tires are inflated to the manufacturer's specifications.

Remove all rocks, or other material that may be lodged in the tread, from all tires that will be rotating on the dynamometer rollers.

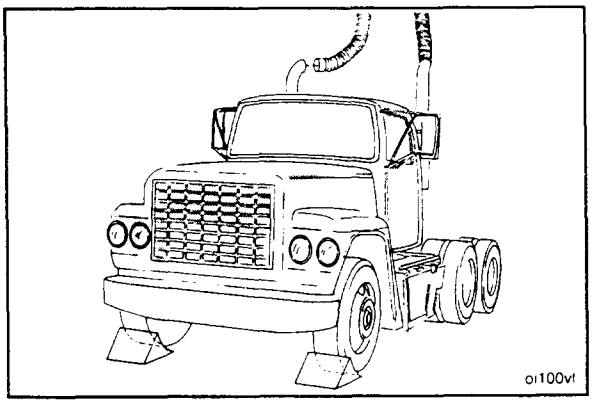


Make sure there is proper overhead clearance for exhaust stacks, air deflectors, or other attachments above the cab.

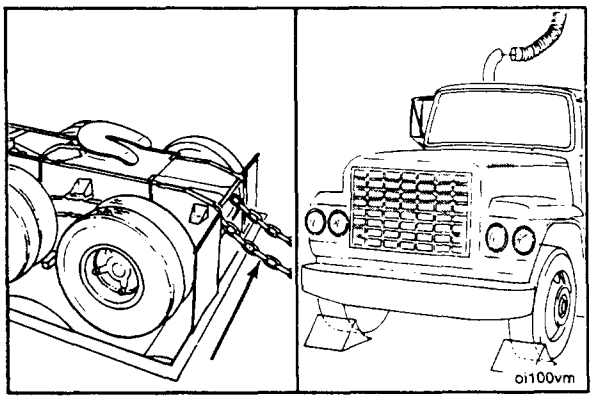


Carefully position the vehicle on the rollers.

**Caution: The "tie down" chains must have slack in their tension to prevent damage to the chassis dynamometer.**

Attach the "tie down" chains to the rear of the vehicle and place wheel chocks ahead of the front wheels.

Adjust the vehicle and dynamometer room exhaust system to be sure that all exhaust gases are removed from the room.

Refer to the chassis dynamometer and vehicle manufacturer's recommendations and specifications for testing procedures.

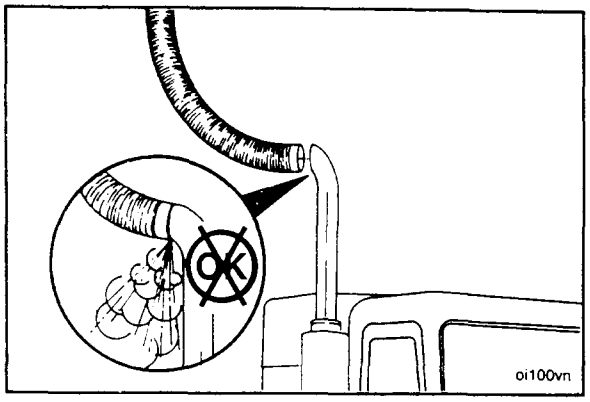


Make sure all instrumentation is removed before removing the vehicle from the dynamometer.

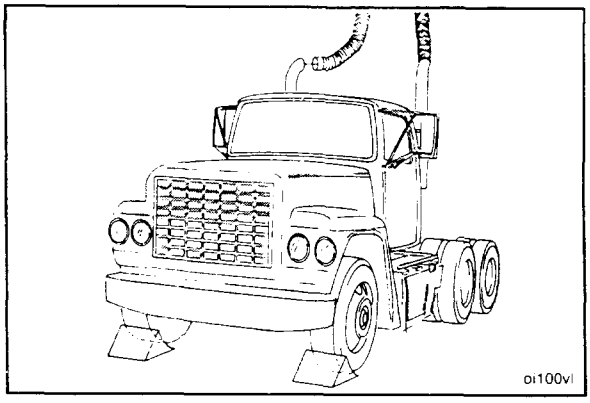


## Engine Run-In Procedure (chassis dynamometer) (08-03)

**Caution: Refer to Procedure 08-01 before operating the engine to avoid internal component damage.**

**Note:** Operate the vehicle in a gear that produces a road speed of 90 to 95 km/h [55 to 60 mph].

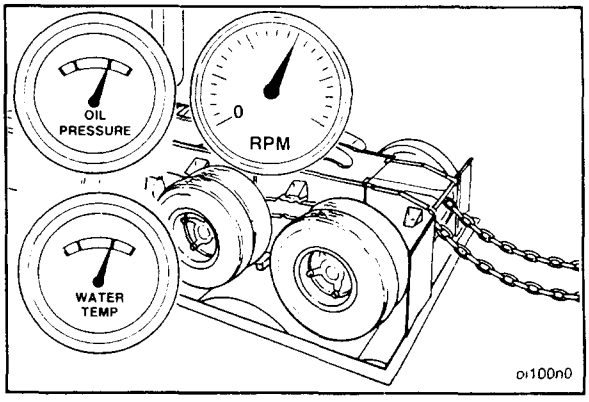


1. Engine operating specifications can be found in the following publications:
   - Fuel Pump PT (type G) Calibration Values: 1970-1975 Bulletin No. 3379068 1976-1982 Bulletin No. 3379182 1983-present Bulletin #3379352
   - Engine Data Sheets/Performance Curves: Construction, Mining, Locomotive,and Agriculture (CMLA), Bulletin #3381194 Generator Drive and Genset, Bulletin #3381174 Automotive, Bulletin #3381237

These publications are available from your local Cummins Authorized Repair Location.

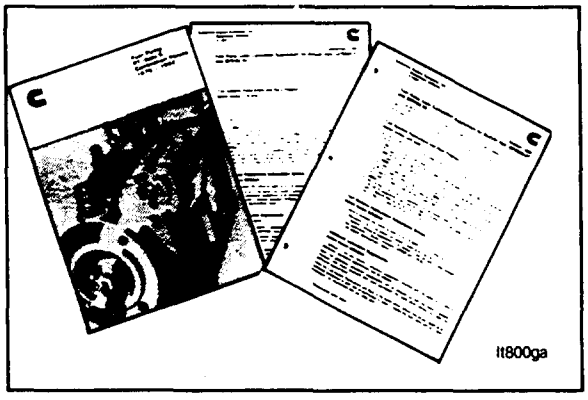

Use this chart to determine the test load.

Example: The test load for a 475 hp engine rated at 2000 RPM with a 15% torque rise is 225 ft-lb.

**NOTE:** This chart assumes the dynamometer constant is 5252. If the dynamometer constant is not 5252, use the following formula to determine the correct test load:

Correct test load = (Dynamometer constant) x (Test load) ÷ 5252

Example: The dynamometer constant for testing the engine in the above example is 4000.

Correct test load = (4000 x 225) ÷ 5252 = 171 ft-lb

**NOTE:** This chart assumes vehicle run-in on a chassis dynamometer. For engine dynamometer test load refer to the K19 Shop Manual.

| Rated RPM | Rated Horsepower | Torque Rise | Test Load |
|---|---|---|---|
| 1200 | All | All | 305 N•m [225 ft-lb] |
| 1500 | All | All | 305 N•m [225 ft-lb] |
| 1800 | 0 to 499 | All | 305 N•m [225 ft-lb] |
| 1800 | 500 to "above" | All | 380 N•m [280 ft-lb] |
| 1900 | 0 to 474 | All | 305 N•m [225 ft-lb] |
| 1900 | 475 and "above" | All | 380 N•m [280 ft-lb] |
| 2000 | 0 to 499 | 0 to 24% | 305 N•m [225 ft-lb] |
| 2000 | 0 to 499 | 25% and "above" | 380 N•m [280 ft-lb] |
| 2000 | 500 and "above" | All | 380 N•m [280 ft-lb] |
| 2100 | 0 to 474 | 0 to 32% | 305 N•m [225 ft-lb] |
| 2100 | 0 to 474 | 33% Plus | 305 N•m [225 ft-lb] |
| 2100 | 475 to 530 | 0 to 15% | 305 N•m [225 ft-lb] |
| 2100 | 475 to 530 | 16% and "above" | 380 N•m [280 ft-lb] |
| 2100 | 531 to 649 | All | 380 N•m [280 ft-lb] |
| 2100 | 650 and "above" | All | 405 N•m [300 ft-lb] |

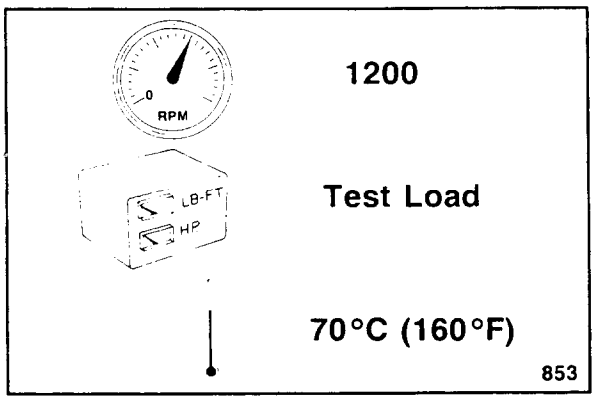


Adjust the engine rpm to 1200 rpm. Adjust the dynamometer load to the test load as previously determined. Operate the engine at this setting until the coolant temperature indicates 70° C [160° F].

Check for leaks. Fix all the minor leaks.

Check all of the gauges and record the readings.

Do not proceed to the next step until the blow-by becomes stable within specifications.

Adjust the engine rpm to the torque peak rpm. Adjust the dynamometer load to equal two times the test load. Operate the engine for two minutes.

Check all the gauges and record the readings.

Do not proceed to the next step until the blow-by becomes stable within specifications.

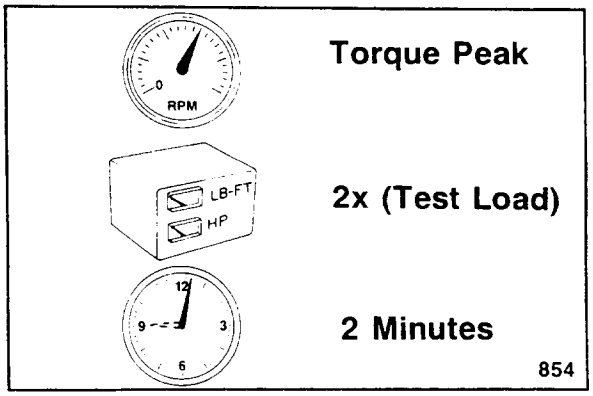


Maintain the engine rpm at torque peak rpm. Increase the dynamometer load to equal three times the test load.

Operate the engine at this load for two minutes.

Check all the gauges and record the readings.

Do not proceed to the next step until the blow-by becomes stable within specifications.

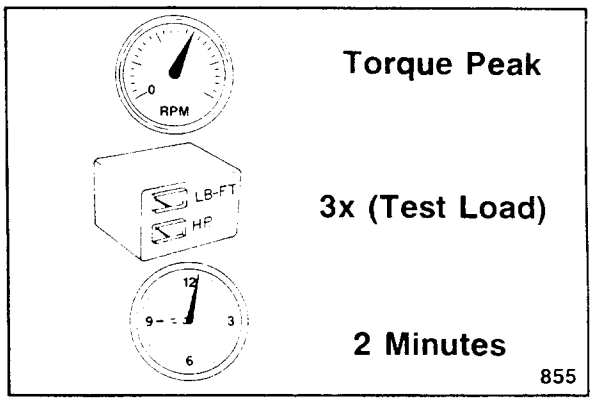


Move the throttle lever to the "FULL OPEN" position. Increase the load until the engine rpm is at torque peak rpm.

Operate the engine at this setting for 10 minutes or until the blow-by becomes stable within specifications.

Check all the gauges and record the readings.

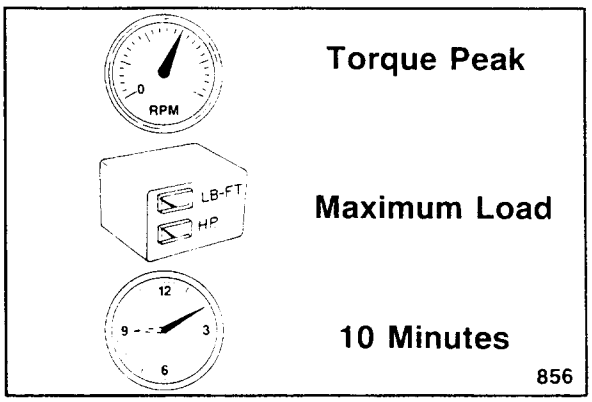


Decrease the dynamometer load until the engine rpm increases to the rated rpm.

Operate the engine at this load for five minutes.

Check all the gauges and record the readings.

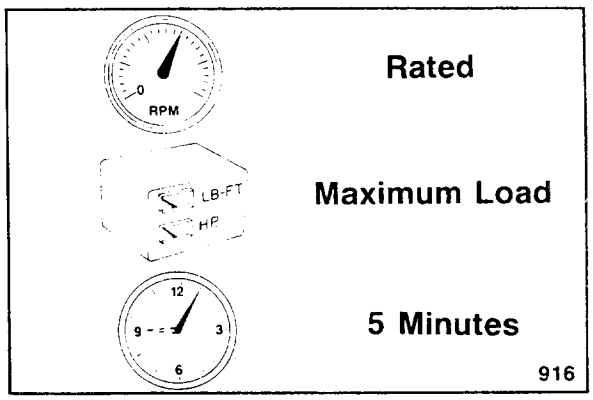

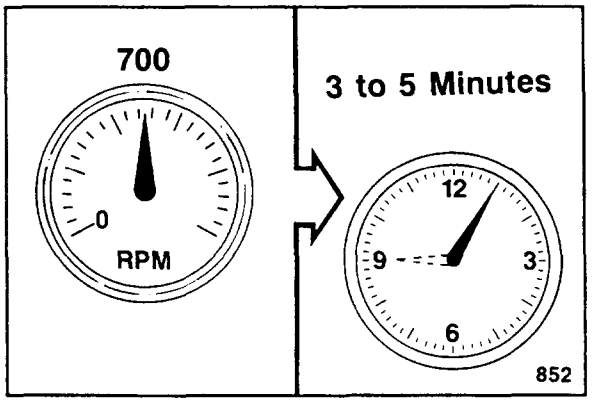


Decrease the dynamometer load completely.

**Caution: Do not turn the engine "OFF" immediately. The engine must be allowed to cool.**

Move the throttle lever to the "LOW IDLE" position. Operate the engine at this setting for three to five minutes. This will allow the turbocharger and the other engine components to cool.

**Caution: Do not operate the engine at "IDLE" longer than specified. Excessive carbon formation can cause engine damage.**

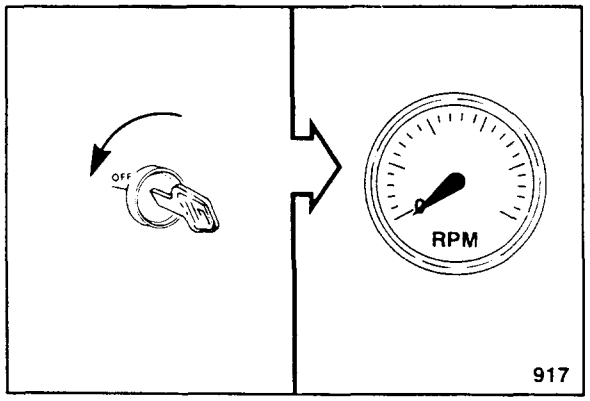


Turn the engine "OFF".

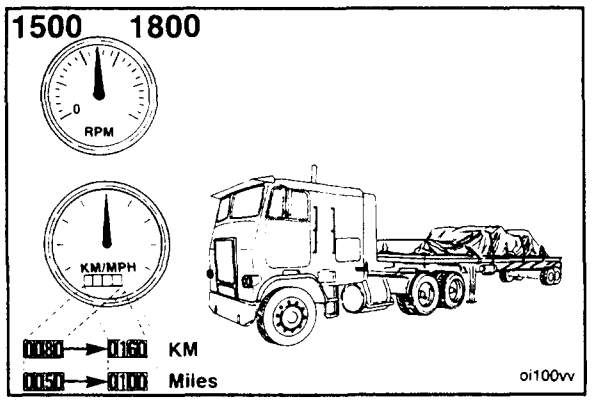


## Engine run-in procedure "in-chassis" (on and off-highway vehicles) (08-04)

### On-Highway

**Caution: Refer to Procedure 08-01 before operating engine to avoid internal component damage.**

1. Operate the engine at 1500 to 1800 rpm in high gear for the first 80 to 160 kilometers [50 to 100 miles] after rebuild.

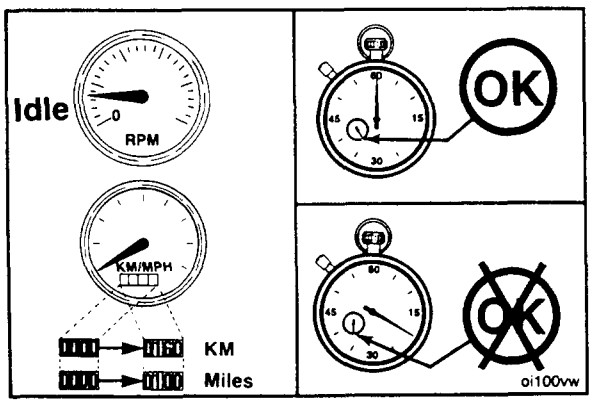


**Note:** Do not idle the engine for more than 5 minutes at any one time during the first 160 kilometers [100 miles] of operation.

## Power Generation

**Caution: Refer to procedure 08-01 before operating engine to avoid internal component damage.**

1. Operate the engine in steps, varying the load from 25% to 100%, until blow-by remains constant.

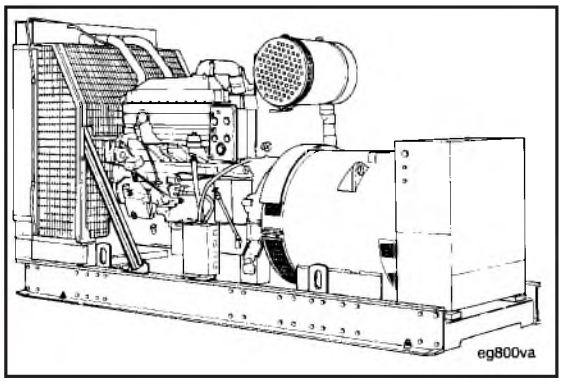


## Off-Highway

**Caution: Refer to Procedure 08-01 before operating engine to avoid internal component damage.**

1. Operate the equipment in the normal duty cycle at part load during the first 3 hours after rebuild.

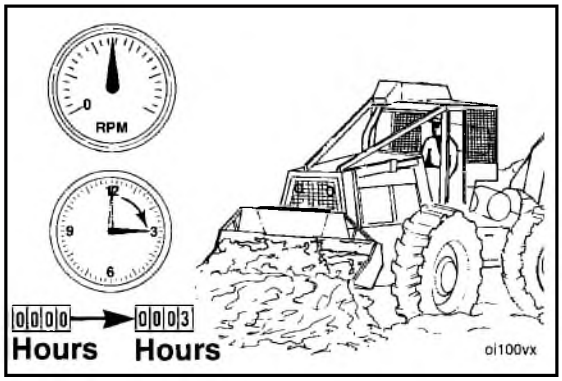


a. Do not idle the engine for more than 5 minutes at any one time.

b. Do not operate the engine at rated rpm. Operate at 75% of rated rpm or lower.

| Rated RPM | Max RPM for First 3 Hrs. |
|---|---|
| 2100 | 1575 |
| 2000 | 1500 |
| 1900 | 1425 |
| 1800 | 1350 |

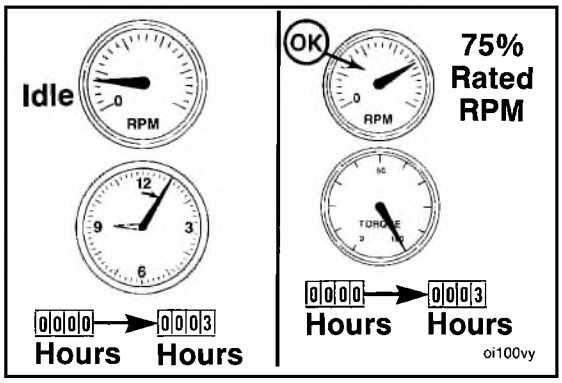


c. Do not operate the engine at full load for more than 5 minutes at any one time.

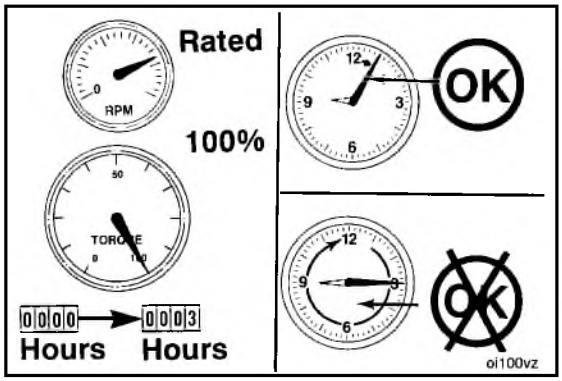

# Engine Configurations And Models (08-05)

**NOTE:** Refer to a Cummins' Authorized Repair Location for additional engine model information.

## Automotive Models

| Configuration Number | Engine Model | HP @ RPM | Note |
|---|---|---|---|
| D19 2 002 BX02 | KT19-450 | 450 @ 2100 | |
| D19 2 037 BX02 | KT19-450 | 450 @ 2100 | (3) |
| D19 3 024 BX02 | KTA19-450 | 450 @ 2100 | |
| D19 3 038 BX02 | KTA19-450 | 450 @ 2100 | |
| D19 3 021 BX02 | KTA19-525 | 525 @ 2100 | |
| D19 3 026 BX02 | KTA19-525 | 525 @ 2100 | |
| D19 3 039 BX02 | KTA19-525 | 525 @ 2100 | (3) |
| D19 3 003 BX02 | KTA19-600 | 600 @ 2100 | |
| D19 3 040 BX02 | KTA19-600 | 600 @ 2100 | (3) |
| D19 3 074 BX02 | KTA19-600 | 600 @ 2100 | (1) (3) |

## Construction Models

| Configuration Number | Engine Model | HP @ RPM | Note |
|---|---|---|---|
| D19 2 073 CX02 | KT19-C | 375 @ 2100 | |
| D19 2 005 CX02 | KT19-C | 450 @ 2100 | |
| D19 2 027 CX02 | KT19-C | 450 @ 2100 | (3) |
| D19 2 051 CX02 | KT19-C | 465 @ 2100 | (3) |
| D19 3 011 CX02 | KTA19-C | 525 @ 2100 | |
| D19 3 028 CX02 | KTA19-C | 525 @ 2100 | (3) |
| D19 3 006 CX00 | KTA19-C | 600 @ 2100 | |
| D19 3 006 CX02 | KTA19-C | 600 @ 2100 | |
| D19 3 029 CX02 | KTA19-C | 600 @ 2100 | (3) |
| D19 3 042 CX02 | KTA19-C | 600 @ 2100 | |
| D19 3 052 CX02 | KTA19-C | 635 @ 2100 | (3) |
| D19 3 065 CX02 | KTTA19-C | 650 @ 2100 | (1) (3) |
| D19 3 053 CX02 | KTA19-C | 700 @ 2100 | (3) |
| D19 3 066 CX02 | KTTA19-C | 700 @ 2100 | (1) |

## Stationary Power Models

| Configuration Number | Engine Model | HP @ RPM | Note |
|---|---|---|---|
| D19 2 018 PX02 | KTA19-P | 450 @ 2100 | (2) |
| D19 2 032 PX02 | KT19-P | 450 @ 2100 | (3) |
| D19 3 025 PX02 | KTA19-P | 525 @ 2100 | (2) |
| D19 3 033 PX02 | KTA19-P | 525 @ 2100 | (3) |
| D19 3 019 PX02 | KTA19-P | 600 @ 2100 | (2) |
| D19 3 034 PX02 | KTA19-P | 600 @ 2100 | (3) |
| D19 3 046 PX02 | KTA19-P | 600 @ 2100 | |
| D19 3 071 PX02 | KTTA19-P | 650 @ 2100 | (1) (3) |
| D19 3 075 PX02 | KTTA19-P | 650 @ 2100 | (3) |

## Agricultural Models

| Configuration Number | Engine Model | HP @ RPM | Note |
|---|---|---|---|
| D19 3 062 AX02 | KTA19-A | 525 @ 2100 | (3) |

(1) Variable Timing (2) Cast Iron Front Cover (2 pc.) (3) Aluminum Front Cover (1 pc.).

## Military Models

| Configuration Number | Engine Model | HP @ RPM | Note |
|---|---|---|---|
| D19 3 072 TX00 | KTA19-T | 730 @ 2100 | (1) |
| D19 3 072 TX02 | KTA19-T | 730 @ 2100 | (1) (3) |

## Locomotive Models

| Configuration Number | Engine Model | HP @ RPM | Note |
|---|---|---|---|
| D19 2 009 LX02 | KT19-L | 450 @ 2100 | |
| D19 2 030 LX02 | KT19-L | 450 @ 2100 | (3) |
| D19 3 010 LX02 | KTA19-L | 600 @ 2100 | |
| D19 3 031 LX02 | KTA19-L | 600 @ 2100 | (3) |

## Marine Models

| Configuration Number | Engine Model | HP @ RPM | Note |
|---|---|---|---|
| D19 2 014 MX02 | KT19-M | 400 @ 1950 | (2) |
| D19 2 063 MX02 | KT19-M | 425 @ 1950 | (3) |
| D19 3 012 MX02 | KTA19-M | 520 @ 1950 | (2) |
| D19 3 064 MX02 | KTA19-M | 520 @ 1950 | (3) |

## Generator Models

| Configuration Number | Engine Model | HP @ RPM | Note |
|---|---|---|---|
| D19 2 013 GX02 | KT19-GS/GC | 460 @ 1800 | (2) |
| D19 2 035 GX02 | KT19-GS/GC | 465 @ 1800 | (3) |
| D19 2 047 GX02 | KT19-GS/GC | 465 @ 1800 | (2) |
| D19 2 058 DX02 | KT19-G | 465 @ 1800 | (3) |
| D19 2 060 DX01 | KT19-G | 465 @ 1800 | (2) |
| D19 2 060 DX02 | KT19-G | 465 @ 1800 | (2) |
| D19 3 015 GX02 | KTA19-GS/GC | 555 @ 1800 | (2) |
| D19 3 036 GX02 | KTA19-GS-1/GC-1 | 560 @ 1800 | (3) |
| D19 3 048 GX02 | KTA19-GS-1/GC-1 | 560 @ 1800 | (2) |
| D19 3 059 DX02 | KTA19-G-1 | 560 @ 1800 | (3) |
| D19 3 061 DX02 | KTA19-G-1 | 560 @ 1800 | (2) |
| D19 3 054 GX02 | KTA19-GS-2/GC-2 | 600 @ 1800 | (3) |
| D19 3 055 GX02 | KTA19-GS-2/GC-2 | 600 @ 1800 | (2) |
| D19 3 056 DX02 | KTA19-G-2 | 600 @ 1800 | (3) |
| D19 3 056 DX02 | KTA19-G-2 | 600 @ 1800 | (2) |
| D19 3 067 DX02 | KTTA19-G | 685 @ 1800 | (1) (3) |
| D19 3 068 GX02 | KTTA19-GS/GC | 685 @ 1800 | (1) |
| D19 3 069 DX02 | KTTA19-G | 685 @ 1800 | (1) (2) |
| D19 3 070 GX02 | KTTAj19-GS/GC | 685 @ 1800 | (1) (2) |

(1) Variable Timing (2) Cast Iron Front Cover (2 pc.) (3) Aluminum Front Cover (1 pc.)

# NOTES

# Section 09 - Engine Remove and Install

## Table of Contents


| | Procedure No. | Page No. |
|---|---|---|
| General Information | 9-01 | 9-2 |
| Service Tools | 9-02 | 9-3 |
| Engine - Remove | 9-03 | 9-4 |
| Engine Mounts - Inspect | 9-04 | 9-7 |
| Engine - Install | 9-05 | 9-7 |

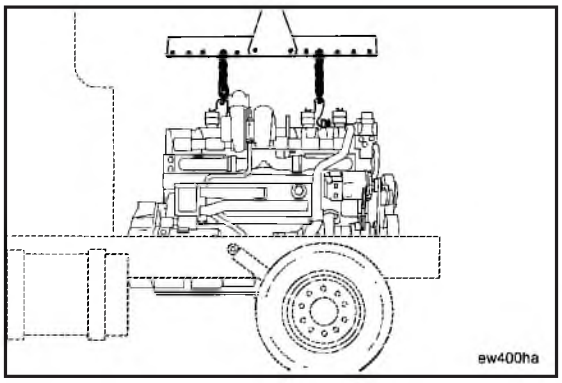


## General Information (09-01)

The procedures required to replace an engine will vary with different engine models, the type of equipment, optional equipment, and the shop facilities. Use the following procedures as a guide.

**NOTE:** All replacement steps will not apply to all types of equipment. Complete only the steps which apply to the equipment involved. Use the equipment manufacturer's recommendations and precautions for removal of chassis parts to gain access to the engine.

# Service Tools (09-02)

The following special tools are recommended to perform the procedures in Section 09. The use of these tools is shown in the appropriate procedure. These tools can be purchased from your local Cummins Authorized Repair Location.

| Tool No. | Tool Description | Tool Illustration |
|---|---|---|
| ST-1258<br>3822512 | **Engine Lifting Fixture**<br>Lift the engine. Part No. ST-1258 is designed to lift up to 1814 kg [4000 lbs]. Part No. 3822512 is designed to lift up to 3175 kg [7000 lbs]. | 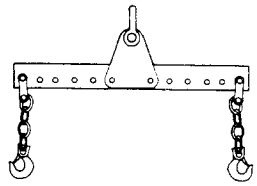 |
| St-1286 | **Lifting Hook**<br>Attach a lifting fixture to the engine to allow the engine to be lifted. Two are required. | |
| 3376879 | **Lifting Hook**<br>Attach a lifting fixture to the engine to allow the engine to be lifted. This tool does not require a rocker lever cover with top mounted breather to be removed. Two are required. | |
| | | |
| | | |
| | | |

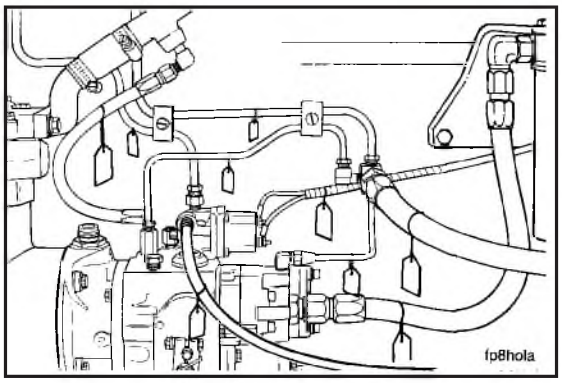


# Engine - Remove (09-03)

**NOTE:** Place a tag on all hoses, lines, linkage, and electrical connections as they are removed to identify their locations.

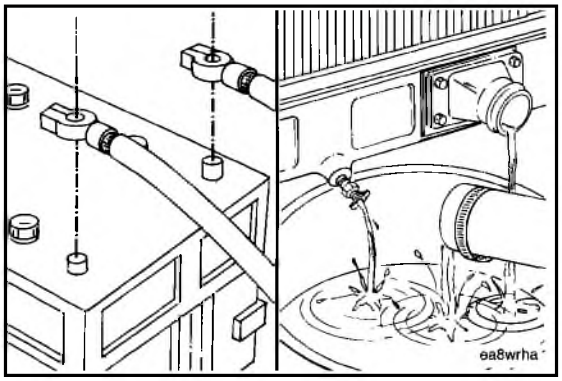


1. Disconnect the battery cables.
2. Drain the engine coolant.

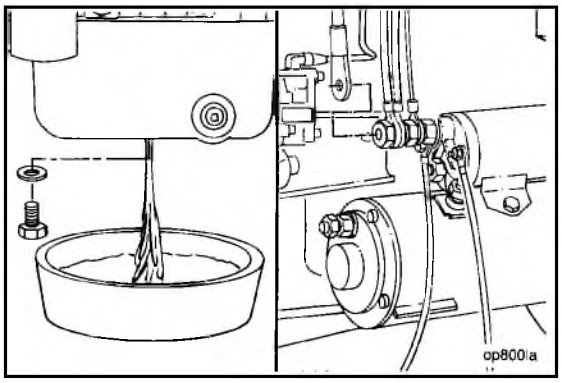


3. Drain the lubricating oil.
4. Disconnect the starter cable, engine ground straps, cab or chassis to engine hoses, tubing, electrical wires and hydraulic lines.

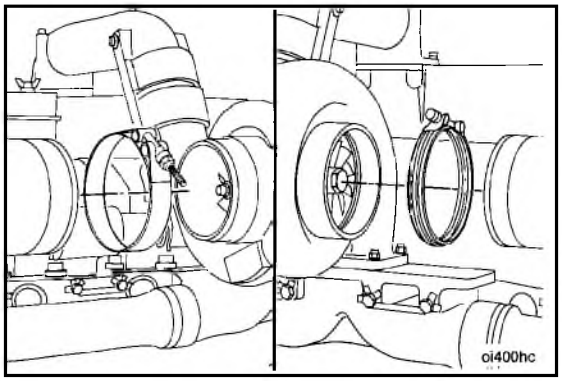


5. Disconnect the intake and exhaust system pipes.

6. Disconnect the throttle linkage from the fuel pump control lever.
7. Disconnect the drive units from the flywheel.

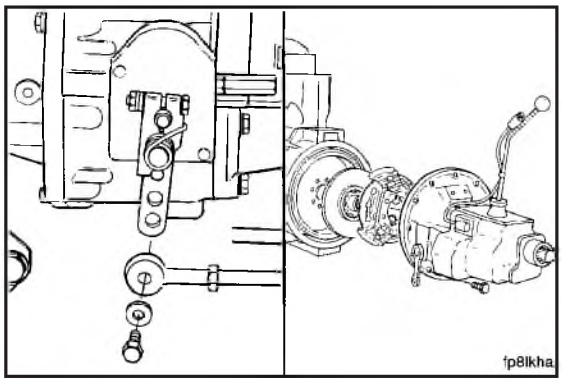


**Warning: If a liquid refrigerant system (air conditioning) is used, wear eye and face protection and wrap a cloth around the fittings before removal. Liquid refrigerant can cause serious eye and skin injury.**

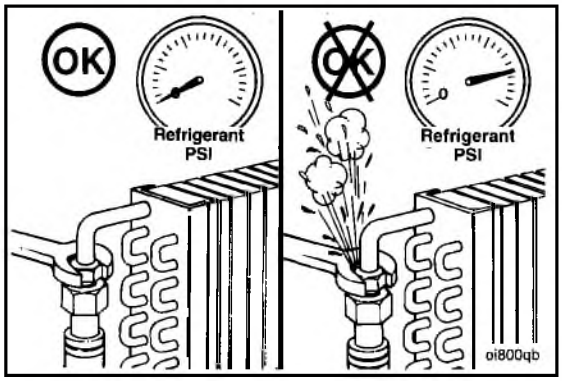


8. Remove all chassis components necessary to remove the engine from the equipment.

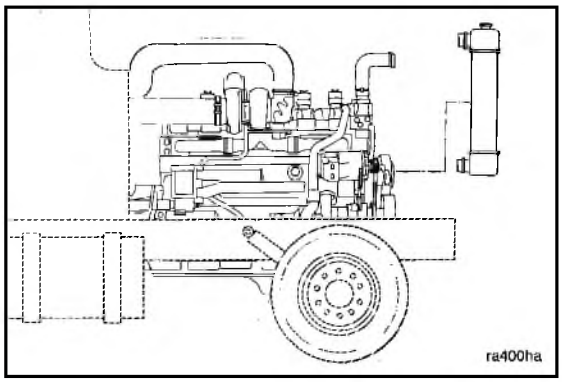


**NOTE:** On applications where the rear engine mounts are attached to the transmission, it may be necessary to remove the engine and transmission as an assembly.

**Warning: The engine lifting equipment must be designed to safely lift the engine and transmission as an assembly.**

The dry weight of the KTA engine with accessories is 1701 kg [3750 lbs]. Refer to the equipment manufacturer's specifications for the transmission weight. The Part No. ST-1258 Lifting Fixture is designed to lift a maximum weight of 1814 kg [4000 lbs]. The Part No. 3822512 Lifting Fixture is designed to lift a maximum of 3175 kg [7000 lbs].

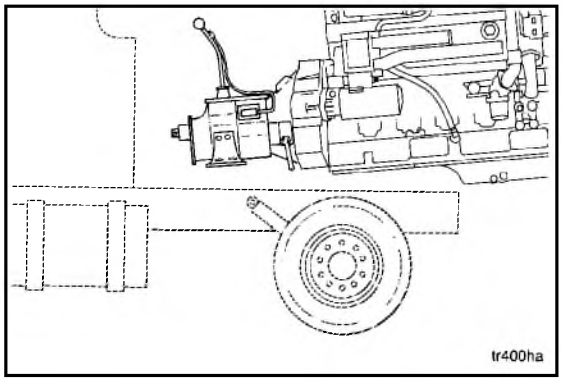

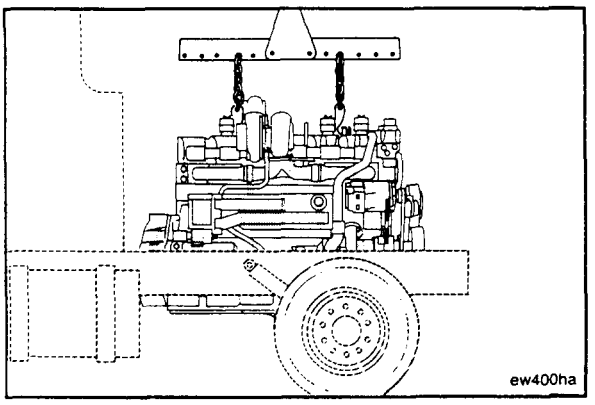


9. Use a properly rated hoist, engine lifting fixture, and two Part No. 3376879 lifting hooks to remove the engine.

**Note:** If the transmission is not removed, place a support under the transmission to prevent it from falling.

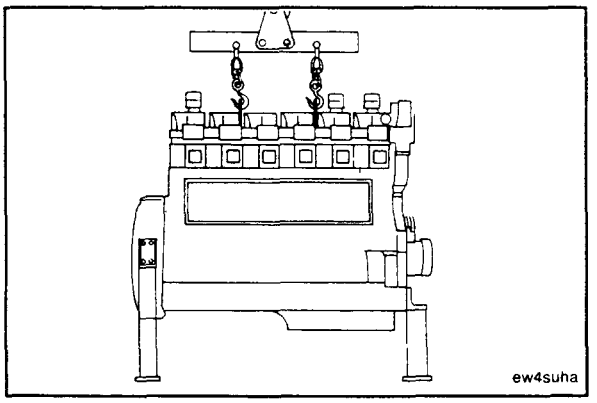


**Warning: The oil sump will not support the weight of the engine. The engine will fall and personal injury can result.**

**Warning: Use a stand or skid that contacts the engine mounts. The stand must hold the weight of the engine and provide permanent support so as to prevent the engine from falling.**

10. Put the engine on the stand.

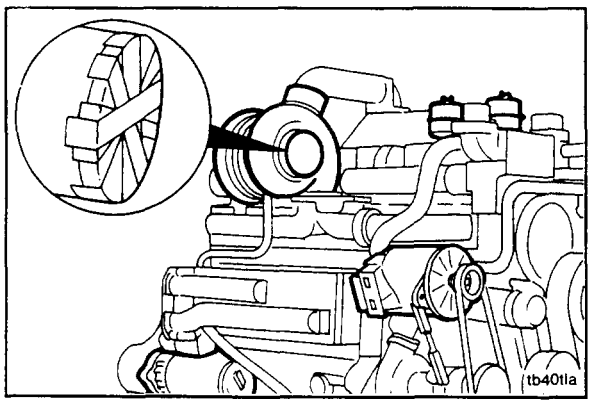


11. Cover all engine openings to prevent dirt and debris from entering the engine.

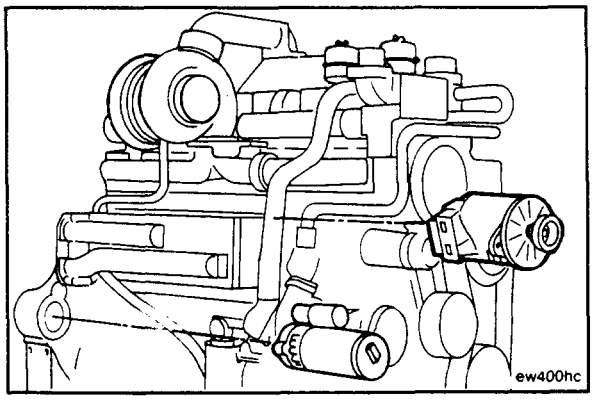


12. Remove all remaining accessories and brackets that will be use on the replacement engine.

## Engine Mount - Inspect (09-04)

1. Clean and check the mounts for reuse. Inspect all rubber-cushioned mounts for cracks or damage.
2. Inspect all mounting brackets for cracks or damaged bolt holes.

**NOTE:** Damaged engine mounts and brackets can cause the engine to move out of alignment, damage the drive line components in the equipment, and result in vibration complaints.

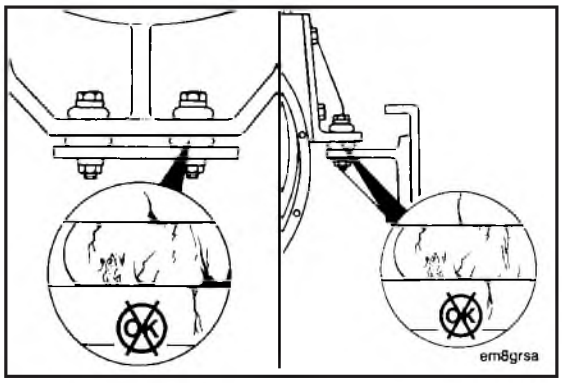


## Engine - Install (09-05)

1. Install all accessories and brackets that were removed from the previous engine.

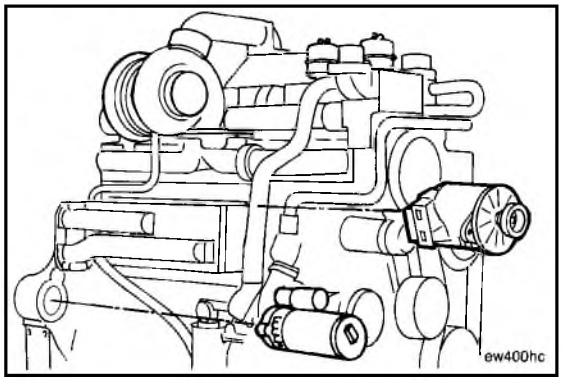


**NOTE:** On applications where the rear engine mounts are attached to the transmission, it may be necessary to install the engine and transmission as an assembly.

**Warning: The engine lifting equipment must be designed to safely lift the engine and transmission as an assembly.**

The dry weight of the KTA engine with accessories is 1701 kg [3750 lbs]. Refer to the equipment manufacturer's specifications for the transmission weight. The Part No. ST-1258 Lifting Fixture is designed to lift a maximum weight of 1814 kg [4000 lbs]. The Part No. 3822512 Lifting Fixture is designed to lift a maximum of 3175 kg [7000 lbs].

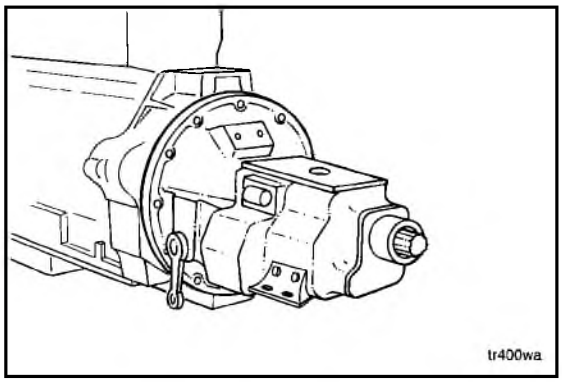


2. Use a properly rated hoist, the Part No. ST-1258 or 3822512 engine lifting fixture, and two Part No. 3376879 lifting hooks to install the engine.

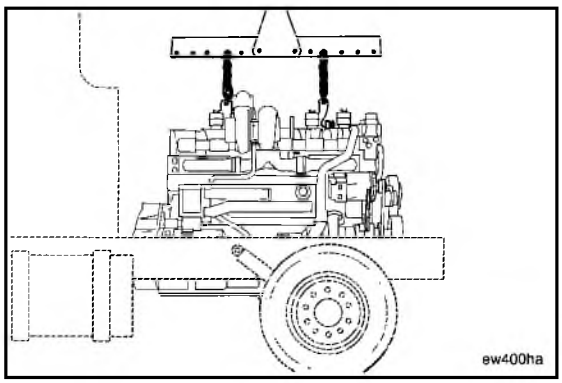

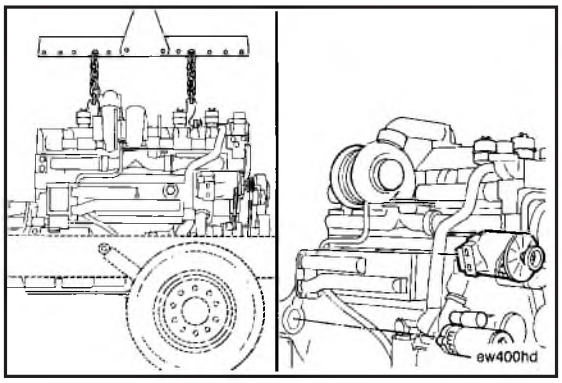


3. Align the engine in the chassis and tighten the engine mounting capscrews. Refer to the equipment manufacturer's torque specifications.
4. Connect all engine and chassis mounted accessories which were removed.

**NOTE:** Be sure all lines, hoses, and tubes are properly routed and fastened to prevent damage.

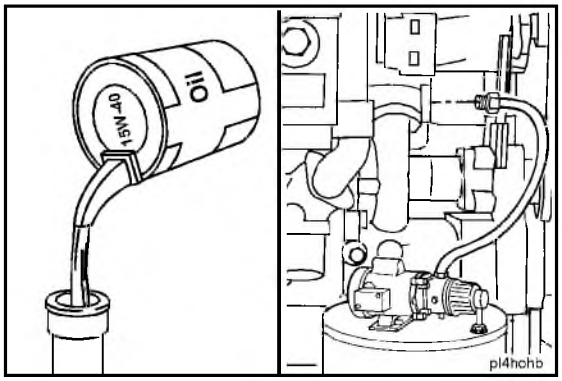


5. Fill the engine with clean 15W-40 lubricating oil. Refer to Procedure 02-10.

**NOTE:** The total oil capacity of the standard engine, including full flow and bypass filters, is 50 liters [12.2 U.S. gallons]. Refer to Reference 02-02 to determine actual capacity by oil pan part number.

**NOTE:** The engine lubricating oil system must be pressurized. Refer to Procedure 08-01.

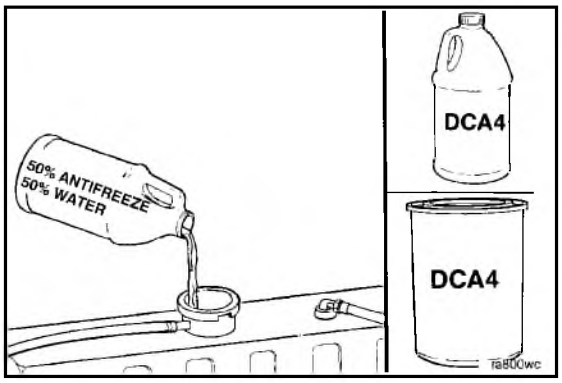


6. Fill the cooling system with 50 percent water, 50 percent ethylene glycol base antifreeze and DCA corrosion protection. Refer to Procedure 01-07.

**NOTE:** The total coolant capacity (engine only) is:

| Non-aftercooled | Aftercooled |
|---|---|
| 26 liters | 30 liters |
| [28. U.S. Qts.] | [32 U.S. Qts.] |

Refer to the equipment manufacturer's specifications for radiator and system capacity.

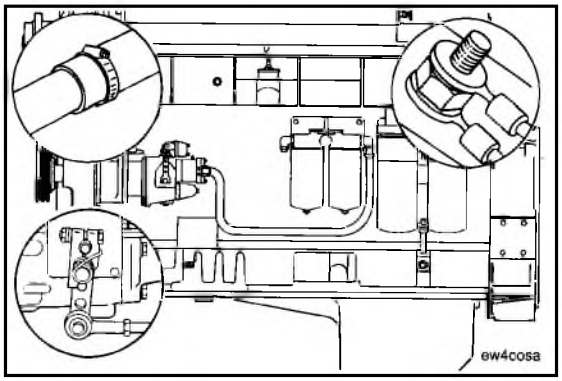


7. Make a final inspection to make sure that all hoses, wires, linages, and components have been properly installed and tightened.

8. Operate the engine at low idle for 2 to 3 minutes.
9. Stop the engine and wait 5 to 7 minutes for the oil to drain to the oil pan and check the oil and coolant levels again.

**Warning: Do not remove the radiator cap from a hot engine. Hot steam can cause serious personal injury. The engine coolant temperature must be below 70°C [160°F].**

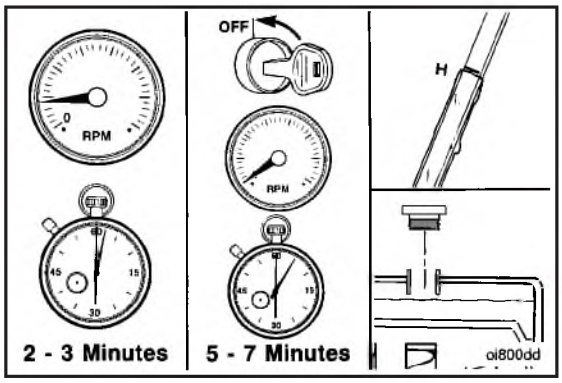


Fill the engine to the correct oil and coolant levels if necessary. Refer to Procedure 02-10 and 01-07.

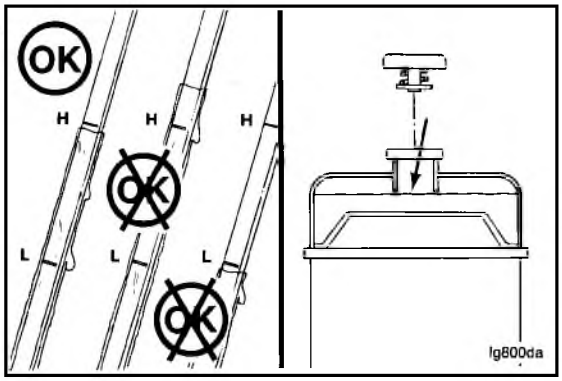


Operate the engine for 8-10 minutes to check for proper operation, unusual noises, and coolant, fuel or lubricating oil leaks.

Repair all leaks and component problems. Refer to the appropriate procedures.

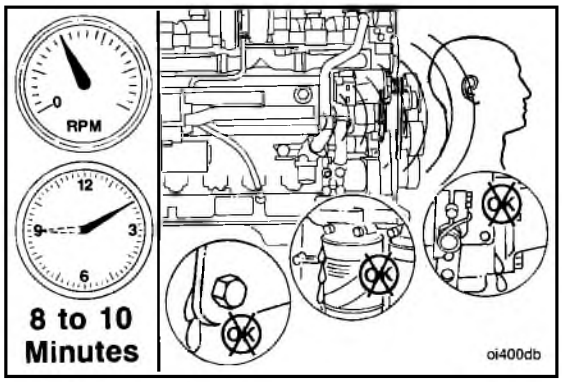

# NOTES

# Section 10 - Engine Component Specifications

## Table of Contents


| | Reference No. | Page No. |
|---|---|---|
| General Information | 10-01 | 10-2 |
| Conversion Factors | 10-02 | 10-3 |
| Pipe Plug Torque Values | 10-03 | 10-4 |
| Capscrew Markings and Torque Values | 10-04 | 10-4 |
| Decimal and Metric Equivalents | 10-05 | 10-6 |
| Component Specifications and Capscrew Torque Values | | |
| Cooling System | 10-06 | 10-7 |
| Lubricating Oil System | 10-07 | 10-10 |
| Combustion Air System | 10-08 | 10-12 |
| Compressed Air System | 10-09 | 10-14 |
| Fuel System | 10-10 | 10-16 |
| Electrical System | 10-11 | 10-17 |
| Base Engine Components | 10-12 | 10-18 |

# General Information - (10-01)

This section contains the engine and component specifications used in this manual, separated by systems in the same sequence they appear in the manual. A procedure number will appear with each component description to aid in locating illustrations that describe inspection procedures. Component capscrew installation torques will follow the specifications in each systems section.

Specifications for parts and components that are **not** discussed in this manual can be found in the other publications. Refer to Section 12.

# Conversion Factors - (10-02)

| QUANTITY | U.S. CUSTOMARY | | METRIC | | FROM U.S. CUSTOMARY TO METRIC MULTIPLY BY | FROM METRIC TO U.S. CUSTOMARY MULTIPLY BY |
|---|---|---|---|---|---|---|
| | Unit Name | Abbr. | Unit Name | Abbr. | | |
| Area | sq. inch | $in^2$ | sq. millimeters | $mm^2$ | 645.16 | 0.001550 |
| Force | pounds force | lbf | Newton | N | 4.4482 | 0.224809 |
| Length | inch | in | millimeters | mm | 25.40 | 0.039370 |
| Pressure | pounds force per sq. in | psi | kilopascal | kPa | 6.8948 | 0.145037 |
| | inches of mercury | in Hg | kilopascal | kPa | 3.3769 | 0.29613 |
| | inches of water | in H2O | kilopascal | kPa | 0.2488 | 4.019299 |
| | inches of mercury | in Hg | millimeters of mercury | mm Hg | 25.40 | 0.039370 |
| | inches of water | in H2O | millimeters of water | mm H2O | 25.40 | 0.039370 |
| Torque | pound force per foot | lb ft | Newton-meter | N•m | 1.35582 | 0.737562 |
| | pound force per inch | lb in | Newton-meter | N•m | 0.113 | 8.850756 |
| Volume: liquid displacement | gallon (U.S.) | gal. | litre | 1 | 3.7853 | 0.264179 |
| | gallon (Imp*) | gal. | litre | 1 | 4.546 | 0.219976 |
| | cubic inch | $in^3$ | litre | 1 | 0.01639 | 61.02545 |
| Weight (mass) | pounds (avoir.) | lb | kilograms | kg | 0.4536 | 2.204623 |

* British measurement

# Pipe Plug Torque Values - (10-03)

| Size | | | Torque | | Torque | |
|---|---|---|---|---|---|---|
| Thread | Actual Thread O.D. | | In Aluminum Components | | In Cast Iron or Steel Components | |
| in | mm | [in] | N•m | [ft-lbs] | N•m | [ft-lbs] |
| 1/16 | 8.1 | [0.32] | 5 | [45 in-lbs] | 15 | [10] |
| 1/8 | 10.4 | [0.41] | 15 | [10] | 20 | [15] |
| 1/4 | 13.7 | [0.54] | 20 | [15] | 25 | [20] |
| 3/8 | 17.3 | [0.68] | 25 | [20] | 35 | [25] |
| 1/2 | 21.6 | [0.85] | 35 | [25] | 55 | [40] |
| | 26.7 | [1.05] | 45 | [35] | 75 | [55] |
| 1 | 33.5 | [1.32] | 60 | [45] | 95 | [70] |
| 1-1/4 | 42.2 | [1.66] | 75 | [55] | 115 | [85] |
| 1-1/2 | 48.3 | [1.90] | 85 | [65] | 135 | [100] |

## Capscrew Markings and Torque Values - (10-04)

**Caution: When replacing capscrews, always use a capscrew of the same measurement and strength as the capscrew being replaced. Using incorrect capscrews can result in engine damage.**

SAE capscrews are graded according to the strength of the capscrew. They are marked on the head so the correct strength and torque value are known.

The table on the following page lists the capscrew markings and the correct value for the capscrew. SAE capscrews are identified by:

| U.S. Customary (5/16 - 18 X 1 1/2) | | |
|---|---|---|
| 5/16 | 18 | 1 1/2 |
| Major Thread Diameter in Inches | Number Threads per Inch | Length in Inches |

**Notes:**

1. Always use the torque values listed on page 10-5 when specific torque values are **not** available.
2. Do **not** use the torque values in place of those specified in other sections of this manual. It is important to use the correct torque values for SAE grade 5 and 8 capscrews.
3. The torque values in the table are based on the use of lubricated threads.

## Capscrew Markings and Torque Values - U.S. Customary

| SAE Grade Number | 5 | | | | 8 | | | |
|---|---|---|---|---|---|---|---|---|
| **Capscrew Head Markings** These are all SAE Grade 5 (3) line | | | | | | | 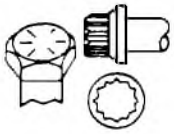 | |
| | Capscrew Torque - Grade 5 Capscrew | | | | Capscrew Torque - Grade 8 Capscrew | | | |
| Capscrew Body Size | Cast Iron | | Aluminum | | Cast Iron | | Aluminum | |
| | N•m | ft-lb | N•m | ft-lb | N•m | ft-lb | N•m | ft-lb |
| 1/4 - 20 | 9 | 7 | 8 | 6 | 15 | 11 | 12 | 9 |
| - 28 | 12 | 9 | 9 | 7 | 18 | 13 | 14 | 10 |
| 5/16 - 18 | 20 | 15 | 16 | 12 | 30 | 22 | 24 | 18 |
| - 24 | 23 | 17 | 19 | 14 | 33 | 24 | 25 | 19 |
| 3/8 - 16 | 40 | 30 | 25 | 20 | 55 | 40 | 40 | 30 |
| - 24 | 40 | 30 | 35 | 25 | 60 | 45 | 45 | 35 |
| 7/16 - 14 | 60 | 45 | 45 | 35 | 90 | 65 | 65 | 50 |
| - 20 | 65 | 50 | 55 | 40 | 95 | 70 | 75 | 55 |
| 1/2 - 13 | 95 | 70 | 75 | 55 | 130 | 95 | 100 | 75 |
| - 20 | 100 | 75 | 80 | 60 | 150 | 110 | 120 | 90 |
| 9/16 - 12 | 135 | 100 | 110 | 80 | 190 | 140 | 150 | 110 |
| - 18 | 150 | 110 | 115 | 85 | 210 | 155 | 170 | 125 |
| 5/8 - 11 | 180 | 135 | 150 | 110 | 255 | 190 | 205 | 150 |
| - 18 | 210 | 155 | 160 | 120 | 290 | 215 | 230 | 170 |
| 3/4 - 10 | 325 | 240 | 255 | 190 | 460 | 340 | 365 | 270 |
| - 16 | 365 | 270 | 285 | 210 | 515 | 380 | 410 | 300 |
| 7/8 - 9 | 490 | 360 | 380 | 280 | 745 | 550 | 600 | 440 |
| - 14 | 530 | 390 | 420 | 310 | 825 | 610 | 660 | 490 |
| 1 - 8 | 720 | 530 | 570 | 420 | 1100 | 820 | 890 | 660 |
| - 14 | 800 | 590 | 650 | 480 | 1200 | 890 | 960 | 710 |

# Decimal and Metric Equivalents - (10-05)

| Metric mm | Decimal in. | Fractions | Metric mm | Decimal in. | Fractions |
|---|---|---|---|---|---|
| **0.39688** | **0.015625** | **1/64** | **13.09687** | **0.515625** | **33/64** |
| 0.79375 | 0.03125 | 1/32 | 13.49375 | 0.53125 | 17/32 |
| 1.19062 | 0.046875 | 3/64 | 13.89062 | 0.546875 | 35/64 |
| 1.58750 | 0.0625 | 1/16 | 14.28750 | 0.5625 | 9/16 |
| 1.98437 | 0.078125 | 5/64 | 14.68437 | 0.578125 | 37/64 |
| 2.38125 | 0.09375 | 3/32 | 15.08125 | 0.59375 | 19/32 |
| 2.77812 | 0.109375 | 7/64 | 15.47812 | 0.609375 | 39/64 |
| 3.1750 | 0.125 | 1/8 | 15.87500 | 0.625 | 5/8 |
| 3.57187 | 0.140625 | 9/64 | 16.27187 | 0.640625 | 41/64 |
| 3.96875 | 0.15625 | 5/32 | 16.66875 | 0.65625 | 21/32 |
| 4.36562 | 0.171875 | 11/64 | 17.06562 | 0.671875 | 43/64 |
| 4.76250 | 0.1875 | 3/16 | 17.46250 | 0.6875 | 11/16 |
| 5.15937 | 0.203125 | 13/64 | 17.85937 | 0.703125 | 45/64 |
| 5.55625 | 0.21875 | 7/32 | 18.25625 | 0.71875 | 23/32 |
| 5.95312 | 0.234375 | 15/64 | 18.65312 | 0.734375 | 47/64 |
| 6.35000 | 0.250 | 1/4 | 19.05000 | 0.750 | 3/4 |
| 6.74687 | 0.265625 | 17/64 | 19.44687 | 0.765625 | 49/64 |
| 7.14375 | 0.28125 | 9/32 | 19.84375 | 0.78125 | 25/32 |
| 7.54062 | 0.296875 | 19/64 | 20.24062 | 0.796875 | 51/64 |
| 7.93750 | 0.3125 | 5/16 | 20.63750 | 0.8125 | 13/16 |
| 8.33437 | 0.328125 | 21/64 | 21.03437 | 0.828125 | 53/64 |
| 8.73125 | 0.34375 | 11/32 | 21.43125 | 0.84375 | 27/32 |
| 9.12812 | 0.359375 | 23/64 | 21.82812 | 0.859375 | 55/64 |
| 9.52500 | 0.375 | 3/8 | 22.22500 | 0.875 | 7/8 |
| 9.92187 | 0.390625 | 25/64 | 22.62187 | 0.890625 | 57/64 |
| 10.31875 | 0.40625 | 13/32 | 23.01875 | 0.90625 | 29/32 |
| 10.71562 | 0.421875 | 27/64 | 23.41562 | 0.921875 | 59/64 |
| 11.11250 | 0.4375 | 7/16 | 23.81250 | 0.9375 | 15/16 |
| 11.50937 | 0.453125 | 29/64 | 24.20937 | 0.953125 | 61/64 |
| 11.90625 | 0.46875 | 15/32 | 24.60625 | 0.96875 | 31/32 |
| 12.30312 | 0.484375 | 31/64 | 25.00312 | 0.984375 | 63/64 |
| 12.70000 | 0.500 | 1/2 | 25.40000 | 1.00 | 1 |

# Cooling System (10-06)

## Torque Values

| | Procedure No. | TorqueN•m [ ft-lb] |
|---|---|---|
| Fan - Mounting Capscrews | 01-21 | 135 [100] |
| Fan Hub (Belt Driven) - Mounting Nuts | 01-25 | 35 [25] |
| Fan Hub (Gear Driven) - Mounting Capscrews | 01-26 | 45 [35] |
| Fan Hub Idler Assembly - Mounting Capscrews | 01-27 | 45 [35] |
| Hose Clamps | 01-32 | 5.6 [50 in-lbs.] |
| Idler Pulley Shaft - Locknut | | 150 [110] |
| Thermostat Housing - Mounting Capscrews | 01-32 | 45 [35] |
| Thermostat Housing Support - Mounting Capscrews | 01-34 | 45 [35] |
| Water Filter Control Valve - Mounting Capscrew | | 20 [15] |
| Water Pump - Mounting Capscrews and Nut | 01-29 | 45 [35] |
| Water Pump Support Bracket - Mounting Capscrew | 01-29 | 205 [150] |

## Specifications

### Fan Drive Ratio (Refer to Procedure 01-24)

| Belt Driven Fan Hub | | |
|---|---|---|
| Fan Pulley | Diameter | Ratio |
| 239 mm | 9.4 inch | .85:1 |
| 289 mm | 11.4 inch | .70:1 |
| 338 mm | 13.3 inch | .60:1 |

### Fan Drive Ratio (Refer to Procedure 01-24)

| Gear Driven Fan Hub | | | |
|---|---|---|---|
| Fan Center Distance | | Centerline Offset | Ratio |
| 512 mm | [20.16 in] | 0 | 1.00:1 |
| 523 mm | [20.60 in] | 0 | .84:1 |
| 512 mm | [20.16 in] | 38 mm [1.5 in] | .70:1 |

## Fan Hub - Belt Driven (Refer to Procedure 01-25)

| End Clearance | | |
|---|---|---|
| mm | | in |
| 0.08 | MIN | 0.003 |
| 0.41 | MAX | 0.016 |

## Fan Hub - Gear Driven (Refer to Procedure 01-26)

| End Clearance | | |
|---|---|---|
| mm | | in |
| 0.08 | MIN | 0.003 |
| 0.25 | MAX | 0.010 |

| Shaft Depth | | |
|---|---|---|
| mm | | in |
| 0.00 | MIN | 0.00 |
| 0.51 | MAX | 0.20 |

| Retainer to Hub Clearance | | |
|---|---|---|
| mm | | in |
| 2.5 | MIN | 0.10 |

| Index Mark Misalignment | | |
|---|---|---|
| mm | | in |
| 3.3 | MAX | 0.13 |

| Backlash | | |
|---|---|---|
| mm | | in |
| 0.08 | MIN | 0.003 |
| 0.30 | MAX | 0.012 |

## Fan Hub Idler (Refer to Procedure 01-27)

| Idler Pulley End Clearance | | |
|---|---|---|
| mm | | in |
| 0.08 | MIN | 0.003 |
| 0.25 | MAX | 0.010 |

## Minimum Water Pump Block Pressure (Refer to Procedure 01-28)

| Engine RPM | Block Pressure at Water Manifold | | Block Pressure at Oil Cooler | |
|---|---|---|---|---|
| | kPa | PSI | kPa | PSI |
| 1800 | 75 | 11 | 103 | 15 |
| 1900 | 82 | 12 | 117 | 17 |
| 2100 | 89 | 13 | 131 | 19 |

## Water Pump (Refer to Procedure 01-30)

| Impeller Vane to Body Clearance | | |
|---|---|---|
| mm | | in |
| 0.58 | MIN | 0.023 |
| 0.86 | MAX | 0.034 |

## Thermostat - Operating Temperature Range (Refer to Procedure 01-33)

| Nominal Setting | | Start to Open | | | | | | Fully Open | |
|---|---|---|---|---|---|---|---|---|---|
| °C | °F | °C | MIN | °F | °C | MAX | °F | °C | °F |
| 85 | 185 | 84 | | 183 | 86 | | 187 | 97 | 207 |
| Full Open Space Between Seal Sleeve and Cross Section 9.50 mm [0.375 in] | | | | | | | | | |

# Lubricating Oil System (10-07)

## Torque Values

| | Procedure No. | Torque N•m [ft-lb] |
|---|---|---|
| Dipstick Gauge Tube | 02-14 | 3/4-1 Turn |
| Hose Clamps | 02-13 | 5.6 [50 in-lb] |
| Oil Cooler Cover (Aluminum) - Mounting Capscrews | 02-20 | 40 [30] |
| Oil Cooler Cover (Cast Iron) - Mounting Capscrews | 02-20 | 45 [35] |
| Oil Cooler Element - Mounting Capscrews | 02-22 | 45 [35] |
| Oil Cooler Housing (Aluminum) - Mounting Capscrews | 02-25 | 40 [30] |
| Oil Cooler Housing (Cast Iron) - Mounting Capscrews | 02-25 | 45 [35] |
| Oil Filter | 02-11 | 3/4-1 Turn |
| Oil Filterhead - Mounting Capscrews | 02-18 | 45 [35] |
| Oil Pan Adapter - 3/8 Inch Capscrews | 02-17 | 45 [35] |
| Oil Pan Adapter - 7/16 Inch Capscrews | 02-17 | 65 [50] |
| Oil Pan Adapter - 9/16 Inch Capscrews | 02-17 | 150 [110] |
| Oil Pan Drain Plug | 02-09 | 100 [75] |
| Oil Pan Sump (or Adapter Cover) - Mounting Capscrews | 02-16 | 45 [35] |
| Oil Pump - Mounting Capscrews | 02-27 | 45 [35] |
| Oil Suction Tube - Mounting Capscrews | 02-17 | 60 [45] |
| Oil Suction Tube Support Bracket - Mounting Capscrews | 02-17 | 35 [25] |
| Torque Converter Cooler Cover (Aluminum) - Mounting Capscrews | 02-21 | 40 [30] |
| Torque Converter Cooler Cover (Cast Iron) - Mounting Capscrews | 02-21 | 45 [35] |
| Torque Converter Cooler Element - Mounting Nuts | 02-24 | 130 [95] |
| Torque Converter Cooler Housing (Aluminum) - Mounting Capscrews | 02-21 | 40 [30] |
| Torque Converter Cooler Housing (Cast Iron) - Mounting Capscrews | 02-21 | 45 [35] |
| Turbocharger Oil Drain - Mounting Capscrews | 02-21 | 45 [35] |

## Specifications

### Oil Pan Capacity (Refer to Procedure 02-15)

| Oil pan | Low Mark | | High Mark | |
|---|---|---|---|---|
| Part No. | Liter | U.S. Gal. | Liter | **U.S. Gal** |
| 3008538 | 32 | 8.5 | 38 | 10 |
| 207304 | 40 | 10.5 | 47 | 12.5 |
| 3006484 | 40 | 10.5 | 47 | 12.5 |
| 3009643 | 40 | 10.5 | 47 | 12.5 |
| 3200709 | 40 | 10.5 | 47 | 12.5 |
| 205881 | 57 | 15 | 64 | 17 |
| 3032521 | 60 | 16 | 68 | 18 |
| 3024391 | 66 | 17 | 72 | 19 |

## Oil Filter Head Pressure Drop (Refer to Procedure 02-12)

| kPa | | PSI |
|---|---|---|
| 207 | MAX | 30 |

## Oil Cooler (Refer to Procedure 02-19)

| Pressure Drop | | |
|---|---|---|
| kPa | | PSI |
| 138 | MAX | 20 |

## Oil Pressure Regulator (Refer to Procedure 02-26)

| Spring - Free Length | | Spring Load at 63.88 mm [2.515 in] | | |
|---|---|---|---|---|
| mm | in | N•m | | Lbs |
| | | 300 | MIN | 68 |
| 95 | 3.75 | 310 | MAX | 70 |

## Oil Pump (Refer to Procedure 02-28)

| End Clearance | | |
|---|---|---|
| mm | | in |
| 0.064 | MIN | 0.0025 |
| 0.165 | MAX | 0.0065 |

# Combustion Air System (10-08)

## Torque Values

| | Procedure No. | Torque N•m [ft-lb] |
|---|---|---|
| Aftercooler - Mounting capscrews | 03-17 | 45 [35] |
| Aftercooler Cover - Mounting Capscrews | 03-18 | 49 [36] |
| Aftercooler Water Tube Retainer - Mounting Capscrews | 03-18 | 35 [25] |
| Air Crossover - Mounting Capscrews | 03-18 | 40 [30] |
| Air Crossover Retainer Strap - Mounting Capscrews | 03-18 | 20 [15] |
| Air Transfer Pipe Retainer Strap - Mounting Capscrews | 03-18 | 20 [15] |
| Exhaust Air Pipe - Mounting Capscrews | 03-13 | 45 [35] |
| Exhaust Air Pipe - V Band Clamp | 03-13 | 4.0 [35 in-lb] |
| Exhaust Manifold (External Lockplate) - Mounting Capscrews | 03-15 | 45 [35] |
| Exhaust Manifold (Internal Lockplate) - Mounting Capscrews | 03-15 | 55 [40] |
| Exhaust Manifold (Self Locking) - Mounting Capscrews | 03-15 | 45 [35] |
| Hose Clamps (Aftercooler Water Tube) | 03-18 | 5.6 [50 in-lb] |
| Hose Clamps (Air Crossover) | 03-18 | 8.4 [75 in-lb] |
| Hose Clamps (Air Inlet Connection) | 03-13 | 8.4 [75 in-lb] |
| Hose Clamps (Air Transfer Pipe) | 03-18 | 8.4 [75 in-lb] |
| Hose Clamps (Turbocharger Oil Drain) | 03-13 | 5.6 [50 in-lb] |
| Intake Manifold - Mounting Capscrews | 03-17 | 45 [35] |
| Turbocharger - Mounting Nuts | 03-13 | 35 [25] |
| Turbocharger Compressor Housing (AiResearch) - V Band Clamp | 03-13 | 6.8 [60 in-lb] |
| Turbocharger Compressor Housing (Holset) - Mounting Capscrews | 03-13 | 27 [230 in-lb] |
| Turbocharger Compressor Housing (Holset) - V Band Clamp | 03-13 | 13.6 [120 in-lb] |
| Turbocharger Oil Drain Tube - Mounting Capscrews | 03-13 | 45 [35] |
| Turbocharger Oil Supply Connection (AiResearch) | 03-13 | 45 [35] |
| Turbocharger Oil Supply Connection (Holset) | 03-13 | 20 [15] |
| Turbocharger Support - Mounting Nuts | 03-14 | 35 [25] |

## Specifications

### Intake Air Restriction (Refer to Procedure 03-08)

Maximum 635 mm - $H_2O$ [25.0 in-$H_20$]

## Exhaust Air Restriction (Refer to Procedure 03-09)

| Maximum 1016 mm-$H_2O$ [40.0 in-$H_2O$] |
|---|
| Maximum 7.5 cm-Hg [3.0 in-Hg] |

## Turbocharger (Refer to Procedure 03-12)

| Radial Clearance (Side to Side) | | |
|---|---|---|
| Turbocharger Model No. | Dimension Minimum | Dimension Maximum |
| T18A | | |
| . Compressor Impeller | 0.08 mm [0.003 in] | 0.18 mm [0.007 in] |
| . Turbine Wheel | 0.08 mm [0.003 in] | 0.18 mm [0.007 in] |
| HC-5A | | |
| . Compressor Impeller | 0.15 mm [0.006 in] | 0.45 mm [0.018 in] |
| . Turbine Wheel | 0.20 mm [0.008 in] | 0.55 mm [0.021 in] |

| Axial Motion (End to End) | | |
|---|---|---|
| Turbocharger Model No. | Dimension Minimum | Dimension Maximum |
| T18A | 0.10 mm [0.004 in] | 0.23 mm [0.009 in] |
| HC-5A | 0.05 mm [0.002 in] | 0.13 mm [0.005 in] |

## Intake Manifold Pressure* (Refer to Procedure 03-20)

| Minimum gauge capacity |
|---|
| 2030 mm-Hg [80 in-Hg] |
| * Refer to fuel pump code for actual value. |

# Compressed Air System (10-09)

## Torque Values

| | Procedure No. | Torque N•m [ft-lb] |
|---|---|---|
| Air Compressor Mounting Capscrews (Single Cylinder) | 04-15 | 45 [35] |
| (Two Cylinder) | 04-16 | 65 [45] |
| Air Compressor Support Bracket (Single Cylinder) | | |
| - Mounting Capscrews to Air Compressor | 04-15 | 45 [35] |
| - Mounting Capscrews to Engine Block | 04-15 | 45 [35] |
| Air Compressor Support Bracket (Two Cylinder) | | |
| - Mounting Capscrews to Air Compressor | 04-16 | 45 [35] |
| - Mounting Capscrews to Engine Block | 04-16 | 60 [45] |
| Air Compressor (Single Cylinder) Cylinder Head Capscrews | 04-14 | Step a. 7 [60 in-lb] |
| | | Step b. 15 [10] |
| | | Step c. 20 [15] |
| | | Step d. 25 [20] |
| Air Compressor (Two Cylinder) Cylinder Head Capscrews | 04-14 | Step a. 15 [10] |
| | | Step b. 25 [20] |
| | | Step c. 40 [30] |
| Unloader Body Capscrews | 04-10 | 15 [120 in-lb] |

## Specifications

### Air Compressor Exhaust Valve (Refer to Procedure 04-13)

| Seating Surface Contact Area | Seat Height | | | Valve Flatness | | |
|---|---|---|---|---|---|---|
| | mm | | in | mm | | in |
| Minimum 100% | 12.32 | MIN | 0.485 | 0.03 | MIN | 0.001 |

### Air Compressor Intake Valve (Refer to Procedure 04-13)

| Seating Surface Contact Area | Seat Height | | | Valve Flatness | | |
|---|---|---|---|---|---|---|
| | mm | | in | mm | | in |
| Minimum 100% | 6.86 | MIN | 0.270 | 0.03 | MIN | 0.001 |

## Compressor Spring Force Specifications

| Spring Part Number | | Approx.Free Length mm [inch] | Number of Coils | Wire Diameter mm [inch] | Force Measurement Length | Minimum N kg [lb.] | Maximum N kg [lb.] |
|---|---|---|---|---|---|---|---|
| 128080 | Exhaust Valve | 17.02 [0.670] | 3.0 | 2.03 [0.080] | 7.11 [0.280] | 35.6<br>3.63 [8.00] | 46.3<br>4.72 [10.40] |
| 190334 | Intake Valve | 12.70 [0.500] | 2.8 | 1.58 [0.062] | 7.11 [0.280] | 3.45<br>0.25 [0.55] | 4.89<br>0.50 [1.10] |
| 150631 | Unloading Valve (naturally aspirated) | 41.91 [1.650] | 11.5 | 2.03 [0.080] | 24.89 [0.980] | 133.4<br>13.6 [30.00] | 169.0<br>[17.23<br>[38.00] |
| 217557 | Unloading Valve (turbocharged up to 1270 mm Hg [50 in Hg]) | 41.91 [1.650] | 12.0 | 1.83 [0.072] | 24.89 [0.980] | 75.6<br>7.72 [17.00] | 97.9<br>9.98 [22.00] |
| 3003101 | Unloading Valve (all lturbocharged engines) | 41.91 [1.650] | 10.8 | 2.89 [0.065] | 24.89 ]0.980] | 53.4<br>5.4 [12.00] | 75.6<br>7.72 [17.00] |

# Fuel System (10-10)

## Torque Values

| | Procedure No. | Torque N•m [ft-lb] |
|---|---|---|
| AFC No-Air Screw Lock Nut | 05-08 | 5 [40 in-lbs] |
| Fuel Filter | 05-13 | 1/2-3/4 turn |
| Fuel Manifold Mounting Capscrews | 05-33 | 9.5 [85 in-lbs] |
| Fuel Pump Mounting Capscrews | 05-11 | 45 [35] |
| Fuel Pump Priming Hole Plug | 05-17 | 30 [20] |
| Gear Pump Check Valve Jam Nut | 05-14 | 5.6 [50 in-lbs] |
| Injector Hold Down Capscrews | 05-09 | 16.2 [145in-lbs] |
| Jumper Tube, STC | 05-09 | 25 [20] |
| Oil Control Valve Mounting Capscrews | 05-28 | 9.0 [80 in-lbs] |
| Oil Manifold, STC | 05-34 | 9.5 [85 in-lbs] |
| VS Governor Throttle Stop Set Screw | 05-05 | 7.0 [60 in-lb] |
| Wiring Harness, STC - Mounting Nuts | 05-29 | 4.0 [35 in-lb] |

## Specifications

### Engine Low Idle Speed (Refer to Procedure 05-05)

| RPM | |
|---|---|
| MIN | MAX |
| 650 | 725 |

### Fuel Filter (Refer to Procedure 05-23)

| Maximum Restriction | | |
|---|---|---|
| | mm-Hg | in-Hg |
| Clean Filter | 102 | 4 |
| Dirty Filter | 203 | 8 |

### Fuel Drain Line (Refer to Procedure 05-24)

| Maximum Restriction | | |
|---|---|---|
| | mm-Hg | in-Hg |
| Without Check Valves | 64 | 2.5 |
| With Check Valves | 165 | 6.5 |

# Electrical System (10-11)

## Torque Values

| | Procedure No. | Torque N•m [ft-lb] |
|---|---|---|
| Alternator Adjusting Link Jam Nuts | 06-09 | 55 [40] |
| Alternator Adjusting Link Mounting Capscrews | | |
| - To Alternator | 06-09 | 55 [40] |
| - To Gear Housing | 06-09 | 55 [40] |
| Alternator Mounting Capscrew and Locknut | 06-09 | 55 [40] |
| Alternator Pulley - Mounting Nut | 06-09 | 105 [80] |
| Starter Motor Mounting Capscrews | | |
| Aluminum Flywheel Housing | 06-11 | 195 [145] |
| Cast Iron Flywheel Housing | 06-11 | 215 [160] |

## Specifications

### Batteries (Refer to Procedure 06-05)

| Specific Gravity at 27°C [80°F] | State of Change |
|---|---|
| 1.260 - 1.280 | 100% |
| 1.230 - 1.250 | 75% |
| 1.200 - 1.220 | 50% |
| 1.170 - 1.190 | 25% |
| 1.110 - 1.130 | Discharged |

### Alternator Belt (Refer to Procedure 06-07)

| Belt Tension (New Belt) |
|---|
| 225 N•m [165 ft-lbs] |

# Base Engine Components (10-12)

## Torque Values

| | Procedure No. | Torque N•m [ft-lb] |
|---|---|---|
| Accessory Drive Support Mounting Capscrew | 07-31 | 45[35] |
| Air Crossover Mounting Capscrew | 07-04 | 40 [30] |
| Air Crossover Retainer Strap | 07-04 | 20 [15] |
| Air Transfer Pipe Retainer Strap | 07-04 | 20 [15] |
| Barring Mechanism | 07-43 | 45 [35] |
| Camfollower Shaft Mounting Capscrews | 07-17 | 42 [31] |
| Camshaft Mounting Capscrews | 07-48 | 45 [35] |
| Camshaft Cover Mounting Capscrews | 07-51 | 25 [20] |
| Connecting Rod Mounting Capscrews | 07-23 | 290 [215] |
| Crankshaft Seal Mounting Capscrews | 07-53 | 11.0 [95in-lbs] |
| Crosshead Adjusting Screw Locknut | | |
| (With Adapter) | 07-11 | 35 [25] |
| (Without Adapter) | 07-11 | 40 [30] |
| Cylinder Head Mounting Capscrews (Black) | 07-14 | 490 [360] |
| Cylinder Head Mounting Capscrews (Silver) | 07-14 | 345 [255] |
| Flywheel Housing Mounting Capscrews | | |
| (Exterior) | 07-54 | 205 [150] |
| (Interior 3/8 inch) | 07-54 | 45 [35] |
| (Interior 7/16 inch) | 07-54 | 65 [50] |
| Flywheel Mounting Capscrews | 07-52 | 285 [210] |
| Front Engine Support | 07-46 | 195 [145] |
| Gear Cover Clamping Plate Mounting Capscrews or Studs | 07-14 | 45 [35] |
| Gear Cover Housing Mounting Capscrews | 07-43 | 45 [35] |
| Gear Cover Mounting Capscrews | 07-39 | 45 [35] |
| Gear Cover Spacer Plate Mounting Capscrews | 07-41 | 45 [35] |
| Hose Clamp, Air Crossover Connection | 07-04 | 8.4 [75in-lbs] |
| Hose Clamp, Air Transfer Pipe | 07-04 | 8.4 [75in-lbs] |
| Hydraulic Pump Drive Mounting Capscrews | 07-39 | 45 [35] |
| Idler Gear Assembly Mounting Capscrew | | |
| (Bolt-in Design) | 07-41 | 245 [180] |
| (Press-in Design) | 07-45 | 45 [35] |
| Jacobs Engine Brake Crosshead Adjusting Screw Locknut | | 65 [50] |
| Jacobs Engine Brake Mounting Capscrews | 07-07 | 95 [70] |
| Jacobs Engine Brake Slave Piston Adjusting Screw Locknut | 07-06 | 55 [40] |

## Torque Values (Continued)

| | Procedure No. | Torque N•m [ft-lb] |
|---|---|---|
| Main Bearing Cap Mounting Capscrews | 07-22 | 605 [445] |
| Piston Cooling Nozzle Mounting Capscrew | 07-21 | 12.5 [110in-lb] |
| Rocker Lever Adjusting Screw Locknut | | |
| (With Adapter) | 07-05 | 45 [35] |
| (Without Adapter) | 07-05 | 60 [45] |
| Rocker Lever Cover Mounting Capscrews | 07-04 | 45 [35] |
| Rocker Lever Housing Mounting Capscrews | 07-11 | 90 [65] |
| Rocker Lever Shaft Mounting Capscrews | R7-53 | 90 [65] |
| Sea Water Pump Drive Gear Mounting Capscrews | 07-48 | 45 [35] |
| Vibration Damper Mounting Capscrews | | |
| (To Crankshaft) | 07-33 | 445 [330] |
| (To Pulley) | 07-33 | 140 [105] |

## Specifications

### Engine Blowby - Check (Refer to Procedure 07-03)

| New Engine Specifications | | | | | | | |
|---|---|---|---|---|---|---|---|
| Engine | Rating | 7.67 mm [.302 in] Orifice | | 9.0 mm [.354 in] Orifice | | 10.3 mm [.406 in] Orifice | |
| | | mm-$H_20$ | [in-$h_20$] | mm-$H_20$ | [in-$h_20$] | mm-$H_20$ | [in-$H_20$] |
| KTTA | All ratings | 508 | [20] | 229 | [9] | 127 | [5] |
| KTA | 2000 & ‘‘above’’ rpm | 355 | [14] | 203 | [8] | N.A. | |
| KTA | 1200 - 1900 rpm | 305 | [12] | 178 | [7] | N.A. | |
| KT | 2000 & ‘‘above’’ rpm | 254 | [10] | 152 | [6] | N.A. | |
| KT | 1500 - 1900 rpm | 203 | [8] | 127 | [5] | N.A. | |

## Valves and Injectors - Adjust (Refer to Procedure 07-05)

| Valve Clearance | | | | | | |
|---|---|---|---|---|---|---|
| | Intake | | | Exhaust | | |
| | mm | | in | mm | | in |
| Initial Set | 0.36 | | 0.014 | 0.69 | | 0.027 |
| Recheck Limits | 0.28 | MIN | 0.011 | 0.60 | MIN | 0.024 |
| | 0.43 | MAX | 0.017 | 0.76 | MAX | 0.030 |

| Injector Travel | | | | | | |
|---|---|---|---|---|---|---|
| | Without STC | | | With STC | | |
| | mm | | in | mm | | in |
| Initial Set | 7.72 | | 0.304 | 10.24 | | 0.403 |
| Recheck Limits | 7.67 | MIN | 0.302 | 10.21 | MIN | 0.402 |
| | 7.77 | MAX | 0.306 | 10.26 | MAX | 0.404 |

## Jacobs Brake - Adjust (Refer to Procedure 07-06)

| Slave Piston Clearance | | |
|---|---|---|
| mm | | in |
| 0.46 | MAX | 0.018 |

## Cylinder Head (Refer to Procedure 07-15)

| Valve | | Depth |
|---|---|---|
| mm | | in |
| 0 | MIN | 0 |
| 0.51 | MAX | 0.020 |

## Cam Followers (Refer to Procedure 07-18)

| Valve Roller Side Clearance | | | **Injector Roller Side Clearance** | | |
|---|---|---|---|---|---|
| mm | | in | mm | | in |
| 0.023 | MIN | 0.009 | 0.023 | MIN | 0.009 |
| 0.060 | MAX | 0.024 | 0.060 | MAX | 0.024 |

## Injection Timing (Refer to Procedure 07-19)

| K-19 Timing Codes | | |
|---|---|---|
| Code | Push Rod Travel mm (in.) | Tolerance mm (in.) |
| AE | 2.74 (0.108) | ± .05 (0.002) |
| CI | 2.90 (0.114) | ± .05 (0.002) |
| AM | 3.00 (0.118) | ± .05 (0.002) |
| AJ | 3.20 (0.126) | ± .05 (0.002) |
| CU | 3.25 (0.128) | ± .05 (0.002) |
| CL | 3.66 (0.144) | ± .05 (0.002) |

| Timing Code | Recommended Key | Direction of Offset |
|---|---|---|
| AE | 216782 | Opposite Cam Rotation |
| CI | 200711 | With Cam Rotation |
| AM | 216782 | With Cam Rotation |
| AJ | 200706 | With Cam Rotation |
| CU | 3000492 | With Cam Rotation |
| CL | S-302 | None |

## Crankshaft (Refer to Procedure 07-22)

| End Clearance | | |
|---|---|---|
| mm | | in |
| 0.10 | MIN | 0.004 |
| 0.41 | MAX | 0.016 |

## Connecting Rod (Refer to Procedure 07-23)

| Side Clearance | | |
|---|---|---|
| mm | | in |
| 0.20 | MIN | 0.008 |

## Cylinder Liner (Refer to Procedure 07-24 and 07-27)

| Inside Diameter | | | Liner Protrusion | | |
|---|---|---|---|---|---|
| 158.737 | MIN | 6.2495 | 0.13 | MIN | 0.005 |
| 158.877 | MAX | 6.2550 | 0.18 | MAX | 0.007 |

## Piston Ring (Refer to Procedure 07-24)

| Piston Ring Gap | | | | | | | | |
|---|---|---|---|---|---|---|---|---|
| Top Ring | | | Intermediate Ring | | | Oil Ring | | |
| mm | | in | mm | | in | mm | | in |
| 0.64 | MIN | 0.025 | 0.64 | MIN | 0.025 | 0.38 | MIN | 0.015 |
| 1.02 | MAX | 0.040 | 1.02 | MAX | 0.040 | 0.71 | MAX | 0.030 |

## Piston (Refer to Procedure 07-25)

| Oil Pin Groove | | | Pin Bore I.D. | | |
|---|---|---|---|---|---|
| mm | | in | mm | | in |
| 4.788 | MIN | 0.1855 | 60.922 | MIN | 2.3985 |
| 4.813 | MAX | 0.1895 | 60.932 | MAX | 2.3989 |

| Piston Skirt O.D. | | | | | | |
|---|---|---|---|---|---|---|
| Part No. 3004730 | | | | All Other Part No.'s | | |
| mm | | in | | mm | | in |
| 158.42 | MIN | 6.237 | At pin | 158.42 | MIN | 6.237 |
| 158.471 | MAX | 6.2930 | bore | 158.471 | MAX | 6.2930 |
| 158.4 | MIN | 6.239 | At skirt | 158.42 | MIN | 6.237 |
| 158.54 | MAX | 6.2418 | bottom | 158.493 | MAX | 6.2399 |

## Cylinder Liner Counterbore (Refer to Procedure 07-26)

| Counterbore Diameter and Depth (Standard Thick Flange) | | | | | |
|---|---|---|---|---|---|
| I.D. (top) | | | Depth | | |
| mm | | in | mm | | in |
| 188.16 | MIN | 7.408 | 13.23 | MIN | 0.521 |
| 188.21 | MAX | 7.410 | 13.28 | MAX | 0.523 |

| I.D. (lower) | | | Packing Ring Bore | | |
|---|---|---|---|---|---|
| mm | | in | mm | | in |
| 180.07 | MIN | 7.090 | 177.34 | MIN | 6.982 |
| 180.14 | MAX | 7.092 | 177.39 | MAX | 6.984 |

## Accessory Drive (Refer to Procedure 07-32)

| End Clearance | | |
|---|---|---|
| mm | | in |
| 0.05 | MIN | 0.002 |
| 0.30 | MAX | 0.012 |

## Vibration Damper (Refer to Procedure 07-33)

| Maximum Eccentricity | | **Damper** | Maximum Wobble | |
|---|---|---|---|---|
| mm | in | | mm | in |
| 1.40 | 0.055 | Rubber | 1.02 | 0.040 |
| 1.02 | 0.040 | Viscous | 1.02 | 0.040 |

## Water Pump Drive (Refer to Procedure 07-38)

| End Clearance | | |
|---|---|---|
| mm | | in |
| 0.23 | MIN | 0.009 |
| 0.33 | MAX | 0.013 |

## Camshaft (Refer to Procedure 07-40)

| Gear I.D. | | | O D at Gear Location | | | Thrust Plate Thickness | | |
|---|---|---|---|---|---|---|---|---|
| mm | | in | mm | | in | mm | | in |
| 57.124 | MIN | 2.2490 | 57.200 | MIN | 2.2520 | 9.12 | MIN | 0.359 |
| 57.150 | MAX | 2.2500 | 57.210 | MAX | 2.2525 | 9.44 | MAX | 0.372 |

## Camshaft (Refer to Procedure 07-48)

| End Clearance | | | Bushing Journal O.D. | | |
|---|---|---|---|---|---|
| mm | | in | mm | | in |
| 0.15 | MIN | 0.006 | 76.07 | MIN | 2.995 |
| 0.33 | MAX | 0.013 | 76.12 | MAX | 2.997 |

## Idler Gear (Refer to Procedure 07-41)

| End Clearance | | | Backlash | | |
|---|---|---|---|---|---|
| mm | | in | mm | | in |
| 0.10 | MIN | 0.004 | 0.07 | MIN | 0.003 |
| 0.36 | MAX | 0.014 | 0.30 | MAX | 0.012 |

## Crankshaft (Refer to Procedure R7-32)

| O.D. at Gear Location | | |
|---|---|---|
| mm | | in |
| 111.25 | MIN | 4.380 |
| 111.28 | MAX | 4.381 |

## Camshaft Bushing (Refer to Procedure 07-48)

| Bushing I.D. (Installed) | | | Camshaft Bushing Journal | | |
|---|---|---|---|---|---|
| mm | | in | mm | | in |
| 76.200 | MIN | 3.0000 | 6.07 | MIN | 2.995 |
| 76.289 | MAX | 3.0035 | 76.12 | MAX | 2.997 |

## Camshaft Bushing Bore (Refer to Procedure 07-50)

| Camshaft Bushing Bore in the Block | | | | | |
|---|---|---|---|---|---|
| After ESN 31103629 | | | Before ESN 31103629 | | |
| mm | | in | mm | | in |
| 82.639 | MIN | 3.2535 | 80.963 | MIN | 3.1875 |
| 82.665 | MAX | 3.2545 | 80.988 | MAX | 3.1885 |

## Flywheel (Refer to Procedure 07-52)

| Flywheel Radius (Center to Dial Indicator) | | Maximum Radial | | Maximum Axial | |
|---|---|---|---|---|---|
| | | Run | Out | Run | Out |
| mm | in | mm | in | mm | in |
| 203 | 8 | 0.13 | 0.005 | 5.08 | 0.008 |
| 254 | 10 | 0.13 | 0.005 | 6.35 | 0.010 |
| 305 | 12 | 0.13 | 0.005 | 7.63 | 0.012 |
| 356 | 14 | 0.13 | 0.005 | 8.90 | 0.014 |
| 406 | 16 | 0.13 | 0.005 | 10.15 | 0.016 |

## Flywheel Housing (Refer to Procedure 07-54)

| Flywheel Housing Bore and Face Runout | | | | |
|---|---|---|---|---|
| SAE No. | Bore I.D. | | Maximum T.I.R. | |
| | mm | in | mm | in |
| 00 | 788 | 31.0 | 0.31 | 0.012 |
| 0 | 648 | 25.5 | 0.25 | 0.010 |
| 1/2 | 584 | 23.0 | 0.25 | 0.010 |
| 1 | 511 | 20.1 | 0.20 | 0.008 |

## Flywheel Housing Oversize Dowels (Refer to Procedure 07-55)

| Oversize Dowel Pin O.D. | | | |
|---|---|---|---|
| Overall Dimension | | Oversize | |
| mm | in | mm | in |
| 13.08 | 0.515 | 0.38 | 0.015 |
| 13.46 | 0.530 | 0.76 | 0.030 |
| 13.84 | 0.545 | 1.14 | 0.045 |

# NOTES

# Index


| | Section No. | Procedure No. |
|---|---|---|
| Accessory Drive | | |
| - Check | 7 | 07-32 |
| - Replace | 7 | 07-31 |
| Accessory Drive Pulley | | |
| - Check | 6 | 06-10 |
| - Replace | 7 | 07-28 |
| - Replace Wear Sleeve | 7 | 07-29 |
| Adapter - Crankshaft - Replace | 7 | 07-33 |
| AFC | | |
| - Check for Air Leak | 5 | 05-20 |
| - Check/Adjust No-Air Setting | 5 | 05-08 |
| Aftercooler | | |
| - Pressure Test | 3 | 03-19 |
| - Replace | 3 | 03-11 |
| - Water Tube - Replace | 3 | 03-18 |
| Aftercooler Element - Replace | 3 | 03-18 |
| Air Compressor | | |
| - Carbon Buildup - Check | 4 | 04-05 |
| - Check for Lubricating Oil Use | 4 | 04-09 |
| - Check for Reuse | 4 | 04-17 |
| - Check Gasket Leaks | 4 | 04-06 |
| - Check Intake or Exhaust Valve | 4 | 04-12 |
| - Check Unloader Valve Operation | 4 | 04-11 |
| - Rebuild Cylinder Head on Engine | 4 | 04-13 |
| - Replace Cylinder Head | 4 | 04-14 |
| - Replace Single Cylinder Model | 4 | 04-15 |
| - Replace Two Cylinder Model | 4 | 04-16 |
| - Replace Unloader Valve | 4 | 04-10 |
| - Specifications | 4 | 04-02 |
| Air Crossover Connection - Replace | 7 | 07-04 |
| Air Governor | | |
| - Check (Air Compressor not Pumping) | 4 | 04-07 |
| - Check (Air Compressor Pumping Continuously) | 4 | 04-08 |
| Air Leaks | | |
| - Combustion Air System - Check | 3 | 03-10 |
| - Fuel Pump - Check | 5 | 05-19 |
| Alternator | | |
| - Adjust Belt Tension | 6 | 06-07 |
| - Output Test | 6 | 06-08 |
| - Replace | 6 | 06-09 |
| - Replace Adjusting Link | 6 | 06-09 |

| | Section No. | Procedure No. |
|---|---|---|
| Alternator Pulley | | |
| - Check | 6 | 06-10 |
| - Replace | 6 | 06-09 |
| Barring Mechanism (Two Piece Design) - Replace | 7 | 07-43 |
| Batteries - Check | 6 | 06-05 |
| Battery Terminals - Check | 6 | 06-04 |
| Bearings | | |
| - Main and Thrust - Replace | 7 | 07-22 |
| - Connecting Rod - Replace | 7 | 07-23 |
| Blowby - Measure | 7 | 07-03 |
| Boost - Measure | 3 | 03-20 |
| Cam Follower Cover - Replace | 7 | 07-17 |
| Cam Followers | | |
| - Check | 7 | 07-18 |
| - Replace | 7 | 07-17 |
| Camshaft - Replace | 7 | 07-48 |
| Camshaft Bushing - Replace | 7 | 07-50 |
| Camshaft Gear | | |
| - Replace (Camshaft Removed) | 7 | 07-49 |
| - Replace (Camshaft Installed) | 7 | 07-40 |
| Camshaft Rear Cover - Replace | 7 | 07-51 |
| Capscrew Torque Values | 10 | 10-04 |
| Clamping Plate, Gear Cover - Replace | 7 | 07-14 |
| Components | | |
| - Manufacturer Address List | 13 | 13-01 |
| - Specifications | 10 | 10-06 |
| Connecting Rod - Replace | 7 | 07-24 |
| Connecting Rod Bearings - Replace | 7 | 07-23 |
| Conversion Factors | 10 | 10-02 |
| Coolant Filter | | |
| - Part No. List | 1 | 01-02 |
| - Replace | 1 | 01-08 |
| Coolant Leak at Counterbore - Check | 1 | 01-36 |
| Coolant Temperature Gauge - Check | 1 | 01-14 |
| Coolant System | | |
| - Clean | 1 | 01-10 |
| - Drain | 1 | 01-06 |
| - Fill | 1 | 01-07 |
| - Flow Diagram | 1 | 01-03 |
| - Maintenance | 1 | 01-05 |
| - Pressure Test | 1 | 01-12 |
| - Specifications | 1 | 01-02 |
| - Test for Air or Combustion Gasses | 1 | 01-11 |

| | Section No. | Procedure No. |
|---|---|---|
| Crankcase Breather and Tube - Replace | 2 | 02-13 |
| Crankcase Pressure (Blowby) - Measure | 7 | 07-03 |
| Crankshaft Gear - Replace | 7 | 07-47 |
| Crosshead | | |
| - Adjust | 7 | 07-05 |
| - Replace | 7 | 07-11 |
| Cup Plugs - Replace | 7 | 07-56 |
| Cylinder Head | | |
| - Check | 7 | 07-15 |
| - Pressure Test | 7 | 07-16 |
| - Replace | 7 | 07-14 |
| Cylinder Head Gasket | | |
| - Check (on Engine) | 7 | 07-12 |
| - Replace | 7 | 07-14 |
| Cylinder Liner | | |
| - Replace | 7 | 07-26 |
| - Check Protrusion | 7 | 07-27 |
| Cylinder Misfire | 5 | 05-21 |
| Diesel Coolant Additives (DCA4) | | |
| - General Information | 1 | 01-09 |
| - Precharge Instructions and Calculation | 1 | 01-02 |
| - Test Kit Instructions | 1 | 01-02 |
| Dipstick - Calibrate | 2 | 02-15 |
| Dipstick Tube - Replace | 2 | 02-14 |
| Driveability - Low Power Check List | 5 | 05-36 |
| Electrical System - Specifications | 6 | 06-02 |
| Engine | | |
| - Diagrams | E | E-02 |
| - Identification | E | E-01 |
| - Install | 9 | 09-05 |
| - Model and Configuration No. | 9 | 09-05 |
| - Mounts - Inspect | 9 | 09-04 |
| - Remove | 9 | 09-03 |
| - Run-In (in Chassis) | 8 | 08-04 |
| - Run-In (on Chassis Dynamometer) | 8 | 08-03 |
| - Specifications | E | E-03 |
| - Test (on Chassis Dynamometer) | 8 | 08-02 |
| Engine Oil Dilution by Fuel Oil | 5 | 05-22 |
| Engine Stall Speed and Time Check | 5 | 05-32 |
| Engine Test - Specifications | 8 | 08-01 |
| Exhaust Restriction - Check | 3 | 03-09 |
| Exhaust Manifold | | |
| - Check | 3 | 03-16 |
| - Replace | 3 | 03-15 |

| | Section No. | Procedure No. |
|---|---|---|
| Exhaust System | | |
| - Flow Diagram | 3 | 03-03 |
| - Specifications | 3 | 03-02 |
| Fan | | |
| - Check RPM | 1 | 01-25 |
| - Inspect | 1 | 01-21 |
| - Replace | 1 | 01-22 |
| Fan Clutch - Check Operation | 1 | 01-24 |
| Fan Drive Belt | | |
| - Check | 1 | 01-23 |
| - Replace | 1 | 01-23 |
| Fan Hub (Belt Driven) | | |
| - Check | 1 | 01-26 |
| - Replace | 1 | 01-26 |
| Fan Hub (Gear Driven) | | |
| - Check | 1 | 01-27 |
| - Replace | 1 | 01-27 |
| Fan Hub Idler and Shock Absorber - Replace | 1 | 01-28 |
| Fan Hub Idler and Turnbuckle - Replace | 1 | 01-28 |
| Fan Idler - Check | 1 | 01-28 |
| Fan Shroud - Inspect | 1 | 01-21 |
| Flywheel - Replace | 7 | 07-52 |
| Flywheel Housing | | |
| - Redowel to Cylinder Block | 7 | 07-55 |
| - Replace | 7 | 07-54 |
| Front Engine Support - Replace | 7 | 07-46 |
| Fuel Consumption Check | 5 | 05-30 |
| Fuel Consumption Check List | 5 | 05-37 |
| Fuel Line Restriction (Drain) | 5 | 05-24 |
| Fuel Line Restriction (Suction) | 5 | 05-23 |
| Fuel Manifold - Replace | 5 | 05-33 |
| Fuel Oil Recommendations | 5 | 05-02 |
| Fuel Pump | | |
| - Adjust Fuel Rate | 5 | 05-07 |
| - Adjust Idle Speed | 5 | 05-05 |
| - Check Rotation | 5 | 05-18 |
| - Check Throttle Travel | 5 | 05-12 |
| - Flow Check and Prime | 5 | 05-17 |
| - Replace | 5 | 05-11 |
| - Replace Gear Pump Check Valve | 5 | 05-14 |
| - VS Governor Leaking Fuel | 5 | 05-15 |
| Fuel Shutoff Valve | 5 | 05-16 |

| | Section No. | Procedure No. |
|---|---|---|
| Fuel System | | |
| - Flow Diagram | 5 | 05-03 |
| - Maintenance | 5 | 05-13 |
| - Specifications | 5 | 05-02 |
| Gear Cover (One Piece Design) - Replace | 7 | 07-39 |
| Gear Cover (Two Piece Design) - Replace | 7 | 07-42 |
| Gear Cover Plate (Spacer Plate) - Replace | 7 | 07-41 |
| Gear Housing (Two Piece Design) - Replace | 7 | 07-43 |
| Gear Pump Check Valve - Replace | 5 | 05-14 |
| Geartrain Backlash - Check | 7 | 07-44 |
| Horsepower - Measure Engine Performance | 5 | 05-06 |
| Hoses - Check | 1 | 01-13 |
| Hydraulic Pump Drive - Replace | 7 | 07-39 |
| Idle Speed - Check/Adjust | 5 | 05-05 |
| Idler Gear | | |
| - Replace Bolt-In Design | 7 | 07-41 |
| - Replace Camshaft Idler | 7 | 07-48 |
| Idler Shaft - Replace Press-In Design | 7 | 07-45 |
| Injection Timing | | |
| - Check and Adjust | 7 | 07-20 |
| - General Information | 7 | 07-19 |
| Injector | | |
| - Adjust Travel | 7 | 07-05 |
| - Check | 5 | 05-10 |
| - Replace | 5 | 05-09 |
| Intake Air Restriction - Check | 3 | 03-08 |
| Intake Manifold Pressure - Check | 3 | 03-20 |
| Intake System - Specifications | 3 | 03-02 |
| Internal Engine Damage - Check | 2 | 02-04 |
| Jacobs Engine Brake | | |
| - Adjust | 7 | 07-06 |
| - Replace | 7 | 07-07 |
| Literature - Order | 12 | 12-01 |
| Low Power | | |
| - Check (Interview Operator) | 5 | 05-31 |
| - Check List | 5 | 05-36 |
| - Check (on Dynamometer) | 5 | 05-06 |
| Magnetic Switch - Check Operation | 6 | 06-06 |
| Main and Thrust Bearings - Replace | 7 | 07-22 |
| Main Oil Pressure Regulator - Replace | 2 | 02-26 |
| Oil Cooler - Measure Pressure Drop | 2 | 02-19 |
| Oil Cooler Core | | |
| - Pressure Test | 2 | 02-23 |
| - Replace | 2 | 02-22 |

| | Section No. | Procedure No. |
|---|---|---|
| Oil Cooler Cover - Replace | 2 | 02-20 |
| Oil Cooler Housing - Replace | 2 | 02-25 |
| Oil Dilution - by Fuel Oil | 5 | 05-22 |
| Oil Filter (Full Flow) - Measure Pressure Drop | 2 | 02-12 |
| Oil Filter Head - Replace | 2 | 02-18 |
| Oil Filters (Full Flow and Bypass) - Replace | 2 | 02-11 |
| Oil Leaks (External) - Check | 2 | 02-05 |
| Oil Manifold - Replace | 5 | 05-34 |
| Oil Pan | | |
| - Drain | 2 | 02-09 |
| - Fill | 2 | 02-10 |
| - Replace | 2 | 02-16 |
| Oil Pan Adapter - Replace | 2 | 02-17 |
| Oil Pressure Gauge - Check | 2 | 02-07 |
| Oil Pump | | |
| - Check | 2 | 02-28 |
| - Replace | 2 | 02-27 |
| Oil System | | |
| - Flow Diagram | 2 | 02-04 |
| - Leak Check Using Dye | 2 | 02-06 |
| - Specifications | 2 | 02-03 |
| Oil Temperature Gauge - Check | 2 | 02-08 |
| Overhead - Set | 7 | 07-05 |
| Pipe Plug | | |
| - Replace | 7 | 07-56 |
| - Torque Values | 10 | 10-03 |
| Piston Cooling Nozzles - Replace | 7 | 07-21 |
| Piston Rings - Replace | 7 | 07-24 |
| Pistons | | |
| - Check | 7 | 07-25 |
| - Replace | 7 | 07-24 |
| Power - Measure Engine Performance | 5 | 05-06 |
| Power Cylinder - Locate Failed Cylinder | 7 | 07-13 |
| Pulley | | |
| - Accessory Drive - Check | 6 | 06-10 |
| - Accessory Drive - Replace Wear Sleeve | 7 | 07-29 |
| - Alternator Drive - Check | 6 | 06-10 |
| - Alternator Drive - Replace | 7 | 07-37 |
| - Crankshaft - Replace | 7 | 07-33 |
| Push Rods - Replace | 7 | 07-08 |

| | Section No. | Procedure No. |
|---|---|---|
| Radiator | | |
| - Check Baffle for Leakage | 1 | 01-17 |
| - Check for Obstruction | 1 | 01-19 |
| - Check for Reverse Flow | 1 | 01-18 |
| - Check Pressure Cap | 1 | 01-15 |
| - Inspect Fins | 1 | 01-16 |
| Rocker Lever Cover - Replace | 7 | 07-04 |
| Rocker Lever Housing - Replace | 7 | 07-11 |
| Rocker Levers | | |
| - Adjust | 7 | 07-05 |
| - Check | 7 | 07-10 |
| - Replace | 7 | 07-09 |
| Seal | | |
| - Accessory Drive - Replace | 7 | 07-30 |
| - Alternator Drive - Replace | 7 | 07-37 |
| - Front Crankshaft - Replace | 7 | 07-36 |
| - Rear Crankshaft - Replace | 7 | 07-53 |
| Service Literature - Order | 12 | 12-01 |
| Service Tools | | |
| - Base Engine Components | 7 | 07-01 |
| - Combustion Air System | 3 | 03-04 |
| - Compressed Air System | 4 | 04-04 |
| - Cooling System | 1 | 01-00 |
| - Electrical System | 6 | 06-03 |
| - Engine Remove and Install | 9 | 09-02 |
| - Fuel System | 5 | 05-04 |
| - Lubricating Oil System | 2 | 02-00 |
| Shutter Operation - Check | 1 | 01-20 |
| Spacer Plate, Gear Cover - Replace | 7 | 07-41 |
| Specifications | | |
| - Base Engine Components | 10 | 10-06 |
| - Combustion Air System | 3 | 03-02 |
| - Compressed Air System | 4 | 04-02 |
| - Cooling System | 1 | 01-02 |
| - Electrical System | 6 | 06-02 |
| - Engine Test | 8 | 08-01 |
| - Fuel System | 5 | 05-02 |
| - General Engine | E | E-01 |
| - Lubricating Oil System | 2 | 02-03 |
| Stall Speed and Time Check | 5 | 05-32 |
| Stall Speed Check List | 5 | 05-35 |
| Starter Solenoid - Check | 6 | 06-06 |
| Starter Switch - Check | 6 | 06-06 |
| Starting Circuit - Check | 6 | 06-06 |

| | Section No. | Procedure No. |
|---|---|---|
| Starting Motor | | |
| - Check | 6 | 06-12 |
| - Replace | 6 | 06-11 |
| STC Flow Diagrams | 5 | 05-03 |
| STC Fuel Pressure Switch - Check | 5 | 05-26 |
| STC General Information | 5 | 05-03 |
| STC Oil Control Valve - Check | 5 | 05-25 |
| STC Oil Control Valve - Replace | 5 | 05-28 |
| STC Oil Manifold - Replace | 5 | 05-34 |
| STC Wiring Harness | | |
| - Check | 5 | 05-27 |
| - Replace | 5 | 05-29 |
| Thermostat | | |
| - Replace | 1 | 01-33 |
| - Test (Thermostat in Chassis) | 1 | 01-32 |
| - Test (Thermostat Removed) | 1 | 01-34 |
| Thermostat Housing - Replace | 1 | 01-35 |
| Throttle Travel - Check | 5 | 05-12 |
| Torque Converter Cooler | | |
| - Pressure Test | 2 | 02-24 |
| - Replace | 2 | 02-21 |
| Torque Values | | |
| - Base Engine Components | 10 | 10-12 |
| - Capscrew | 10 | 10-04 |
| - Combustion Air System | 10 | 10-08 |
| - Compressed Air System | 10 | 10-09 |
| - Cooling System | 10 | 10-06 |
| - Electrical System | 10 | 10-11 |
| - Fuel System | 10 | 10-10 |
| - Lubricating Oil System | 10 | 10-07 |
| - Pipe Plug | 10 | 10-03 |
| Turbocharger | | |
| - Adjust Drain Tube Angle | 3 | 03-13 |
| - Check Axial/Radial Clearance | 3 | 03-12 |
| - Check Blades for Damage | 3 | 03-11 |
| - Check Compressor Seal for Leakage | 3 | 03-06 |
| - Check for Correct Part No. | 3 | 03-07 |
| - Check Turbine Seal for Leakage | 3 | 03-05 |
| - Measure Boost | 3 | 03-20 |
| - Replace | 3 | 03-13 |
| - Series - Replace | 3 | 03-14 |
| Valves and Injectors - Adjust | 7 | 07-05 |
| Variable Speed Governor Leaking Fuel | 5 | 05-15 |

| | Section No. | Procedure No. |
|---|---|---|
| Vibration Damper | | |
| - Check (Rubber Design) | 7 | 07-35 |
| - Check (Viscous Design) | 7 | 07-34 |
| - Replace | 7 | 07-33 |
| Water Pump | | |
| - Check | 1 | 01-31 |
| - Check Block Pressure | 1 | 01-29 |
| - Replace | 1 | 01-30 |
| Water Pump Drive | | |
| - Check | 7 | 07-38 |
| - Replace | 7 | 07-37 |
| Water Tube | | |
| - Aftercooler - Replace | 3 | 03-18 |
| - Rocker Lever Housing - Replace | 7 | 07-11 |

# Section 12 - Service Literature

The following publications contain information and specifications not contained in this manual. They may be ordered by filling in and mailing the Service Literature Order Form.

| Title of Publication | Bulletin No. | Price (U.S. $)* |
|---|---|---|
| K19 Specifications Manual | 3810259 | $ 6.00 |
| K19 Shop Manual | 3810258 | 22.00 |
| Fuel Pump Rebuild Manual | 3379084 | 12.00 |
| Injector Rebuild Manual | 3379071 | 9.00 |
| Single Cylinder Air Compressor Shop Manual | 3810242 | 7.25 |
| Two Cylinder Air Compressor Shop Manual | 3810257 | 7.25 |
| Turbochargers Rebuild Manual (T18A) | 3379091 | 7.25 |
| HC-5A Turbocharger Shop Manual | 3810243 | 7.25 |
| K Temperature Sensing Fan Drive Operation and Installation (Recall Book) | 3387082 | 2.50 |
| Fuel Pump PT (type G) Calibration Values | | |
| 1970-1975 | 3379068 | 12.00 |
| 1976-1982 | 3379182 | 12.00 |
| 1983-Present | 3379352 | 12.00 |
| Engine Data Sheets/Performance Curves | | |
| Construction, Mining, Locomotive, and Agriculture | 3381194 | 1.00 |
| Generator Drive and Genset | 3381174 | 1.00 |
| Automotive | 3381237 | 1.00 |
| Installation Recommendations Bulletin | | |
| Construction, Mining, Logging, and Agriculture | 3382108 | .75 |
| Air Intake System | 3382118 | .75 |
| Cold Weather Operation | 3382643 | .75 |
| Compressed Air System | 3382171 | .75 |
| Cooling System | 3382362 | .75 |
| Engine Mounting | 3382138 | .75 |
| Engine Performance | 3382109 | .75 |
| Exhaust System | 3382409 | .75 |
| Fuel System | 3382113 | .75 |
| Lubrication System | 3382110 | .75 |
| Noise Control | 3382014 | .75 |
| Power Trains | 3382150 | .75 |
| Service Accessibility | 3382452 | .75 |
| Starting & Electrical System | 3382135 | .75 |
| Torsional Vibration | | |
| Automotive | | |
| Air Intake System Cold Weather Operation | 3382673 | .75 |
| Compressed Air System | 3382384 | .75 |
| Cooling System | 3382643 | .75 |
| Electrical System | 3382413 | .75 |
| Engine Driven Accessories | 952804 | .75 |
| Engine Mounting | 952863 | .75 |
| Exhaust System | 3382382 | .75 |
| Fuel System | 3382685 | .75 |
| Lubrication System | 3382707 | .75 |
| Noise Control | 3382385 | .75 |
| Power Train | 3382383 | .75 |
| Accessibility | 952845 | .75 |
| | 3382101 | .75 |

* Current prices are in effect until January 1, 1987; after this date, contact your Cummins Authorized Repair Location for current pricing information.

## Service Literature Ordering Location

Order service literature from your nearest regional location; refer to the addresses listed below:

| Region | Ordering Location |
|---|---|
| United States and Canada | Literature Control Service<br>3400 Robards Court<br>P.O. Box 34470<br>Louisville, Kentucky 40232-4470 |
| U.K., Europe, Mid-East, Africa and Eastern European Countries | Cummins Daventry<br>Royal Oak Way South<br>Northants, England NN11 5 NU |
| South and Central America (excluding Brazil and Mexico) | Cummins Americas, Inc.<br>16085 Northwest 52nd Avenue<br>Hialeah, Florida 33104 |
| Brazil and Mexico | International Parts Order Dept.<br>Cummins Engine Company<br>Columbus, Indiana 47202<br>Mail Code 40931 |
| Far East (excluding Australia and New Zealand) | Cummins Diesel Sales Corp.<br>Literature Center<br>100-G Pasir Panjang Road<br>Singapore 0511 |
| Australia and New Zealand | Cummins Diesel Australia<br>Maroondah Highway, P.O.B. 139<br>Ringwood 3134<br>Victoria, Australia |

## Service Literature Order Form

Use this form for prompt handling of your literature order.

| Bulletin Number | Literature Description | Quantity | U.S. Price Each* | Amount |
|---|---|---|---|---|
| | | | | |
| | | | | |
| | | | | |
| | | | | |
| | | | | |
| | | | | |
| | | | **Subtotal** | |
| | | | **Indiana Residents add 5% sales tax** | |
| | | | **Total** | |

## Service Literature Order Form

Use this form for prompt handling of your literature order.

| Bulletin Number | Literature Description | Quantity | U.S. Price Each* | Amount |
|---|---|---|---|---|
| | | | | |
| | | | | |
| | | | | |
| | | | | |
| | | | | |
| | | | | |
| | | | **Subtotal** | |
| | | | **Indiana Residents add 5% sales tax** | |
| | | | **Total** | |

☐ Payment enclosed. Make certified check or money order payable to Cummins Engine Company, Inc.

**From:**

Name: _____
Street Address: _____
City: _____ State: _____ Zip Code: _____
Country: _____

**Ship To: (Name and address where literature is to be shipped)**

Name: _____
Street Address: _____
City: _____ State: _____ Zip Code: _____
Country: _____

---

☐ Payment enclosed. Make certified check or money order payable to Cummins Engine Company, Inc.

**From:**

Name: _____
Street Address: _____
City: _____ State: _____ Zip Code: _____
Country: _____

**Ship To: (Name and address where literature is to be shipped)**

Name: _____
Street Address: _____
City: _____ State: _____ Zip Code: _____
Country: _____

# COMPONENT MANUFACTURERS

## UNITED STATES AND UNITED KINGDOM OFFICES

The following list contains addresses and telephone numbers of suppliers of accessories used on Cummins engines. Suppliers may be contacted directly for any specifications **not** covered in this manual.

### AIR CYLINDERS

Bendix Ltd.
Douglas Road
Kingswood
Bristol
England
Telephone: 0272-671781

Catching Engineering
2101 Roberts Drive
Broadview, IL 60153
Telephone: (312) 344-2334

### AIR HEATERS

Fleetguard, Inc.
Route 8
Cookeville, TN 38501
Telephone: (615) 526-9551

Kim Hotstart Co.
West 917 Broadway
Spokane, WA 99210
Telephone: (509) 534-6171

### AIR STARTERS

Ingersoll Rand
Chorley New Road
Horwich
Bolton
Lancashire
England
BL6 6JN
Telephone: 0204-65544

Ingersoll-Rand Engine
Starting Systems
651 Park Avenue
King of Prussia, PA 19406
Telephone: (215) 337-5900

### ALTERNATORS

Robert Bosch Ltd.
P.O. Box 166
Rhodes Way
Watford
WD2 41B
England
Telephone: 0923-44233

Butec Electrics
Cleveland Road
Leyland
PR5 1XB
England
Telephone: 0744-21663

C.A.V. Electrical Equip.
P.O. Box 36
Warple Way
London
W3 7SS
England
Telephone: 01-743-3111

A.C. Delco Comp. Group
Civic Offices
Central Milton Keynes
MK9 3EL
England
Telephone: 0908-66001

Delco-Remy
P.O. Box 2439
Anderson, IN 46018
Telephone: (317) 646-7838

Leece-Neville Corp.
1374 E. 51st St.
Cleveland, OH 44013
Telephone: (216) 431-0740

### BELTS

Dayco Rubber U.K.
Sheffield Street
Stockport
Cheshire
SK4 1RV
England
Telephone: 061-432-5163

### BELTS (CONTINUED)

T.B.A. Ind. Products
P.O. Box 77
Wigan
Lancashire
WN2 4XQ
England
Telephone: 0942-59221

Dayco Corp.
Belt Technical Center
P.O. Box 3258
Springfield, MO 65804
Telephone: (417) 881-7440

Gates Rubber Company
5610 Crawfordsville Road
Suite 2002
Speedway, IN 46224
Telephone: (317) 248-0386

Goodyear Tire and
Rubber Company
49 South Franklin Road
Indianapolis, IN 46219
Telephone: (317) 898-4170

### CLUTCHES

Twin Disc Intl. S.A.
Chaussee de Namur
Nivelles
Belgium
Telephone: 067-224941

Twin Disc Clutch Co.
Racine, WI 53403
Telephone: (414) 634-1981

### COOLANT HEATERS

Fleetguard, Inc.
Route 8
Cookeville, TN 38501
Telephone: (615) 526-9551

## DRIVE PLATES

Detroit Diesel Allison
Div. of General Motors
P.O. Box 894
Indianapolis, IN 46206
Telephone: (317) 244-1511

## ELECTRIC STARTERS

Butec Electrics
Cleveland Road
Leyland
PR5 1XB
England
Telephone: 0744-21663

C.A.V. Electrical Equip.
P.O. Box 36
Warple Way
London
W3 7SS
England
Telephone: 01-743-3111

A.C. Delco Comp. Group
Civic Offices
Central Milton Keynes
MK9 3EL
England
Telephone: 0908-66001

Delco-Remy
P.O. Box 2439
Anderson, IN 46018
Telephone: (317) 646-7838

Leece-Neville Corp.
1374 E. 51st Street
Cleveland, OH 44013
Telephone: (216) 431-0740

## FANS

Truflo Ltd.
Westwood Road
Birmingham
B6 7JF
England
Telephone: 021-327-4789

Hayes-Albion
1999 Wildwood Avenue
Jackson, MI 49202
Telephone: (517) 782-9421

## FAN CLUTCHES

Holset Eng. Co. Ltd.
P.O. Box 9
Turnbridge
Huddersfield
England
Telephone: 0484-22244

## FAN CLUTCHES (CONTINUED)

Rockford Division
Borg-Warner Corporation
1200 Windsor Road
P.O. Box 7007
Rockford, IL 61125-7007
Telephone: (815) 633-7460

## FILTERS

Fleetguard
Cavalry Hill
Weedon
Northants
NN7 4PP
England
Telephone: 0327-41313

Fleetguard, Inc.
Route 8
Cookeville, TN 38501
Telephone: (615) 526-9551

## FLEXPLATES

Corrugated Packing and
Sheet Metal
Hamsterley
Newcastle Upon Tyne
Telephone: 0207-560-505

Detroit Diesel Allison
Div. of General Motors
P.O. Box 894
Indianapolis, IN 46206
Telephone: (317) 244-1511

## FUEL WARMERS

Fleetguard, Inc.
Route 8
Cookeville, TN 38501
Telephone: (615) 526-9551

## GAUGES

Grasslin U.K. Ltd.
Vale Rise
Tonbridge
Kent
TN9 1TB
England
Telephone: 0732-359888

Icknield Instruments Ltd.
Jubilee Road
Letchworth
Herts
England
Telephone: 04626-5551

## GAUGES (CONTINUED)

Superb Tool and
Gauge Co.
21 Princip Street
Birmingham
B4 61E
England
Telephone: 021-359-4876

Smiths Industries
50 Oxgate Lane
Cricklewood
London
NW2 7JB
England
Telephone: 01-452-3333

Kabi Elec. and Plastics
Cranborne Road
Potters Bar
Herts
EN6 3JP
England
Telephone: 0707-53444

Datcon Instrument Co.
P.O. Box 128
East Petersburg, PA 17520
Telephone: (717) 569-5713

Rochester Gauge of Texas
11637 Denton Drive
Dallas, TX 75229
Telephone: (214) 241-2161

## GOVERNORS

Woodward Governors Ltd.
P.O. Box 15
663/664 Ajax Avenue
Slough
Bucks
SL1 4DD
England
Telephone: 0753-26835

Colman Nederland
Maalderij 30
1185 ZC Amstelveen
The Netherlands
Telephone: 020-455157

Woodward Governor Co.
1000 E. Drake Road
Fort Collins, CO 80522
Telephone: (303) 482-5811

Barber Colman Co.
1300 Rock Street
Rockford, IL 61101
Telephone: (815) 877-0241

## GOVERNORS (CONTINUED)

United Technologies
Diesel Systems
1000 Jorie Blvd.
Oak Brook, IL 60521
Telephone: (312) 325-2020

## HYDRAULIC AND POWER STEERING PUMPS

Hobourn Eaton Ltd.
Priory Road
Strood
Rochester
Kent
ME2 2BD
Telephone: 0634-77733

Sundstrand Hydratec Ltd.
Cheney Manor Trading
Estate
Swindon
Wiltshire
SN2 2PZ
England
Telephone: 0793-30101

Sperry Vickers
Washington Road
Oaklands House
Oaklands Drive
Sale
Greater Manchester
England
Telephone: 061-962-4646

Sperry Vickers
1401 Crooks Road
Troy, MI 48084
Telephone: None Available

## OIL HEATERS

Fleetguard, Inc.
Route 8
Cookeville, TN 38501
Telephone: (615) 526-9551

Kim Hotstart Co.
West 917 Broadway
Spokane, WA 99210
Telephone: (509) 534-6171

## SAFETY CONTROLS

Teddington Ind. Equip.
Windmill Road
Sunburn on Thames
Middlesex
TW16 7HF
England
Telephone: 09327-85500

## SAFETY CONTROLS (CONTINUED)

The Nason Company
10388 Enterprise Drive
Davisburg, MI 48019
Telephone: (313) 625-5381

## TORQUE CONVERTERS

Twin Disc Intl. S.A.
Chaussee de Namur
Nivelles
Belgium
Telephone: 067-224941

Twin Disc Clutch Co.
Racine, WI 53403
Telephone: (414) 634-1981

Rockford Division
Borg-Warner Corporation
1200 Windsor Road
P.O. Box 7007
Rockford, IL 61125-7007
Telephone: (815) 633-7460

# NOTES