Troubleshooting and Repair Manual
Big Cam III and Big Cam IV, NT 855 Engines

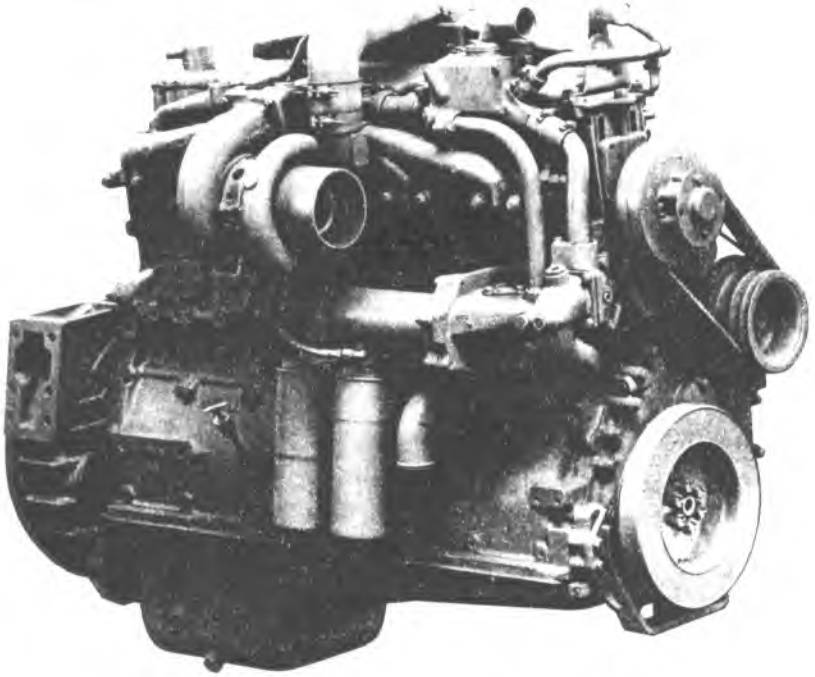

Big Cam III

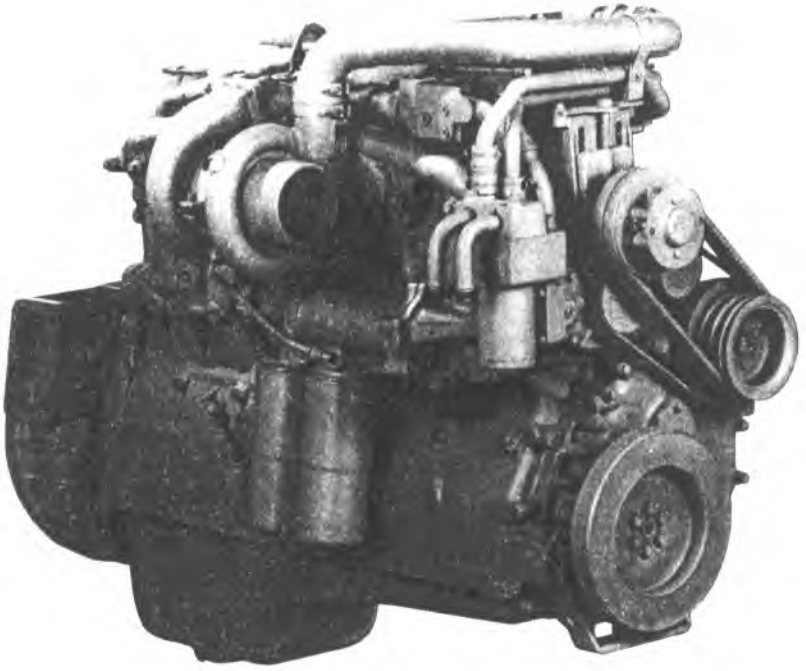

Big Cam IV

Copyright © 1986
Cummins Engine Company, Inc.

Bulletin No. 3810298-00
Printed 6-86

Foreword

This manual provides instructions for troubleshooting and repairing the NT 855 engine in the chassis. Component and assembly rebuild procedures are provided in the NT 855 Engine Shop Manual. Refer to page 2 in the Introduction for instructions on how to use this manual.

The manual is organized to guide a service technician through the logical steps of identifying and correcting problems related to the engine.

This manual does **not** cover vehicle or equipment problems. Consult the vehicle or equipment manufacturer for repair procedures.

The repair procedures used in this manual are recommended by Cummins Engine Company, Inc. Some service procedures require the use of special service tools. Use the correct tools as described.

The information, specifications, and recommended repair procedures in this publication are based on the information in effect at the time this manual was printed. Cummins Engine Company, Inc. reserves the right to make changes at any time without notice.

Reporting of errors, omissions, and recommendations for improving this publication by the user is encouraged. Please send all suggestions and comments to:

Table of Contents

	Section	Page
Introduction	I	1
Engine Identification	E	1
- General Engine Specifications		3
- Engine Diagrams		5
Troubleshooting	T	1
- Procedures and Techniques		1
- Symptoms List		2
- Symptoms Cause and Corrections Charts		3
Engine Systems Repair		
- Cooling	1	1
- Lubricating Oil	2	1
- Combustion Air	3	1
- Compressed Air	4	1
- Fuel	5	1
- Electrical	6	1
- Base Engine Components	7	1
Engine Testing (″In-Chassis″)	8	1
Engine - Remove and Install	9	1
Engine Component Specifications	10	1
Alphabetical Index	11	1
Additional Service Literature	12	1
Accessory Component Manufacturers	13	1

Section I - Introduction

Table of Contents

	Page No.
About the Manual	2
How to Use the Manual	2
Symbols	3
Illustrations	7
Definition of Terms	8
General Repair Instructions	9
General Cleaning Instructions	10

About the Manual

This NT 855 Troubleshooting and Repair Manual is intended to aid in determining the cause of engine-related problems and to provide recommended repair procedures. The manual is divided into sections. Some sections contain reference numbers and procedure numbers. The reference numbers provide general information, specifications, diagrams, and service tools, where applicable. The procedure numbers describe specific repair procedures and are referred to in the Troubleshooting Logic Charts.

How to Use the Manual

The manual is organized to provide an easy flow from problem identification to problem correction. A list of troubleshooting symptoms containing the most common engine problems is on page 2 in the Troubleshooting Section. Complete the following steps to locate and correct the problem:

(STEP 1.) Locate the symptom on the list.

Reference is made to the page number where the"Troubleshooting Logic Chart" is found.

(STEP 2.) The left column of the "Troubleshooting Logic Chart" indicates a probable cause, starting at the top with the simplest and easiest to repair, and continuing downward to the most difficult.

The right column provides a brief description of the corrective action with a procedure number reference for the repair procedure.

(STEP 3.) Locate the probable cause in the left column, and then turn to the procedure referenced in the right column.

The repair procedures are listed by system (cooling, lubricating oil, combustion air, compressed air, fuel, electrical, and base engine components).

(STEP 4.) The Troubleshooting Logic Charts are based on the following assumptions:

1. The engine has been installed according to the manufacturer's specifications.
2. The easiest repairs are done first.
3. "Generic" solutions to cover problems with the most common applications and OEM's (Original Equipment Manufacturer).

Generic Symbols

The following symbols have been used in this manual to help communicate the intent of the instructions. When one of the symbols appears, it conveys the meaning defined below:

WARNING - Serious personal injury or extensive property damage can result if the warning instructions are **not** followed.

CAUTION - Minor personal injury can result or a part, an assembly, or the engine can be damaged if the caution instructions are **not** followed.

Indicates a **REMOVAL or DISASSEMBLY** step.

Indicates an **INSTALLATION or ASSEMBLY** step.

INSPECTION is required.

CLEAN the part or assembly.

PERFORM a mechanical or time **MEASUREMENT**.

LUBRICATE the part or assembly.

Indicates that a **WRENCH or TOOL SIZE** will be given.

TIGHTEN to a specific torque.

PERFORM an electrical **MEASUREMENT**.

Refer to another location in this manual or another publication for additional information.

Simbolos Usados En Este Manual

Los símbolos siguientes son usados en este manual para clarificar el proceso de las instrucciones. Cuando aparece uno de estos símbolos, su significado se especifica en la parte inferior.

ADVERTENCIA - Serios daños personales o daño a la propiedad puede resultar si las instrucciones de Advertencia **no** se consideran.

PRECAUCION - Daños menores pueden resultar, o de piezas del conjunto o el motor puede averiarse si las instrucciones de Precaución **no** se siguen.

Indica un paso de **REMOCION** o **DESMONTAJE.**

Indica un paso de **INSTALACION** o **MONTAJE.**

Se requiere **INSPECCION.**

LIMPIESE la pieza o el montaje.

EJECUTESE una **MEDICION** mecánica o del tiempo.

LUBRIQUESE la pieza o el montaje.

Indica que se dará una **LLAVE DE TUERCAS** o el **TAMAÑO DE HERRAMIENTA.**

APRIETESE hasta un par torsor específico.

EJECUTESE una **MEDICION** eléctrica.

Para información adicional refiérase a otro emplazamiento de este manual o a otra publicación anterior.

Symbole

In diesem Handbuch werden die folgenden Symbole verwendet, die wesentliche Funktionen hervorheben. Die Symbole haben folgende Bedeutung:

WARNUNG - Wird die Warnung **nicht** beachtet, dann besteht erhöhte Unfall- und Beschädigungsgefahr.

VORSICHT - Werden die Vorsichtsmassnahmen **nicht** beachtet, dann besteht Unfall- und Beschädigungsgefahr.

AUSBAU bzw. **ZERLEGEN.**

EINBAU bzw. **ZUSAMMENBAU.**

INSPEKTION erforderlich.

Teil oder Baugruppe **REINIGEN.**

DIMENSION - oder **ZEITMESSUNG.**

Teil oder Baugruppe **ÖLEN.**

WERKZEUGGRÖSSE wird angegeben.

ANZUG auf vorgeschriebenes Drehmoment erforderlich.

Elektrische **MESSUNG DURCHFÜHREN.**

Weitere Informationen an anderer Stelle bzw. in anderen Handbüchern.

Symboles Utilises Dans Ce Manuel

Les symboles suivants sont utilisés dans ce manuel pour aider à communiquer le but des instructions. Quand l'un de ces symboles apparaît, il évoque le sens défini ci-dessous:

AVERTISSEMENT - De graves lésions corporelles ou des dommages matériels considérables peuvent survenir si les instructions données sous les rubriques ″Avertissement″ **ne** sont **pas** suivies.

ATTENTION - De petites lésions corporelles peuvent survenir, ou bien une piéce, un ensemble ou le moteur peuvent être endommagés si les instructions données sous les rubriques ″Attention″ **ne** sont **pas** suivies.

sécurité p

Indique une opération de **DEPOSE.**

Indique une opération de **MONTAGE.**

L'INSPECTION est nécessaire.

NETTOYER la piéce ou l'ensemble.

EFFECTUER une **MESURE** mécanique ou de temps.

GRAISSER la piéce ou l'ensemble.

Indique qu'une **DIMENSION DE CLE** ou **D'OUTIL** sera donnée.

SERRER à un couple spécifique.

EFFECTUER une **MESURE** électrique.

Se reporter à un autre endroit dans ce manuel ou à une autre publication pour obtenir des informations plus complétes.

Illustrations

The illustrations used in the "Repair Sections" of this manual are intended to give an example of a problem and to show what to look for and where the problem can be found. Some of the illustrations are "generic" and might **not** look exactly like the engine or parts used in your application. The illustrations may contain symbols to indicate an action required and an acceptable or **not** acceptable condition.

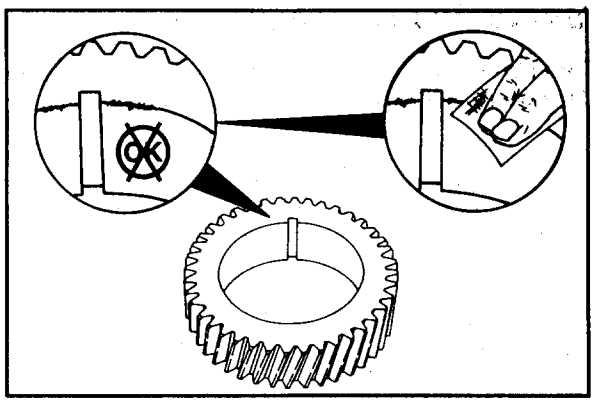

The illustrations are intended to show repair or replacement procedures with the engine "in-chassis." The illustration can differ from your application, but the procedure given will be the same.

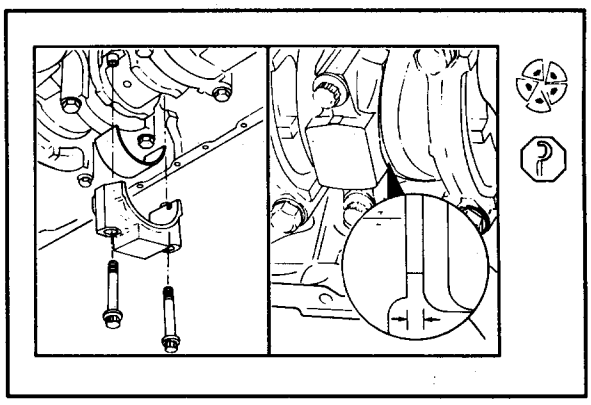

Definition of Terms

The following is a list of guidelines for each procedure in the "Repair Sections" of the Troubleshooting and Repair Manual. The procedure will be given first, followed by a definition of the step or steps involved.

Check - Examine a component or system for damage, excessive wear, accuracy, safety, or performance.

Inspect - Examine a component or dimension to make sure it meets the required specifications.

Test - Check or compare the performance of a component or system to established specifications.

Adjust - Complete the necessary steps to set or adjust the component, assemblies, or system in the required setting or position.

Visually Inspect - Look for any obvious damage or problem.

Remove - Take off a component or assembly.

Clean - Remove dirt, grease, or other contamination.

Disassemble - Take apart the component or assembly.

Repair - Restore a component or assembly to a serviceable condition within the established specifications.

NOTE: Only the easiest and simplest repairs will be made to a component or assembly. If a component or assembly **must** be rebuilt, it **must** be replaced with a new or Cummins Diesel ReCon , Inc. replacement or be rebuilt at a Cummins authorized repair location.

Replace - Install a new, correctly rebuilt, or Cummins Diesel ReCon , Inc. component or assembly in place of the one which is removed.

Install - Place a component or assembly in the correct position.

Star Pattern Torque Sequence -

General Repair Instructions

The NT 855 engine incorporates the latest diesel technology; yet, it is designed to be repaired using normal repair practices performed to quality standards.

Warning: Cummins Engine Company, Inc. does not recommend/authorize any modifications or repairs to engines or components except for those detailed in Cummins Service Information. In particular, unauthorized repair to safety-related components can cause personal injury. Below is a partial listing of components classified as safety-related:

Air Compressor
Air Controls
Air Shutoff Assemblies
Balance Weights
Cooling Fan
Fan Hub Assembly
Fan Mounting Bracket(s)
Fan Mounting Capscrews
Fan Hub Spindle
Flywheel
Flywheel Crankshaft Adapter
Flywheel Mounting Capscrews
Fuel Shutoff Assemblies
Fuel Supply Tubes
Lifting Brackets
Throttle Controls
Turbocharger Compressor Casing
Turbocharger Oil Drain Line(s)
Turbocharger Oil Supply Line(s)
Turbocharger Turbine Casing
Vibration Damper Mounting Capscrews

- **Follow All Safety Instructions Noted in the Procedures.**
  - Follow the manufacturer's recommendations for cleaning solvents and other substances used during the repair of the engine. **Always** use good safety practices with tools and equipment.
- **Provide A Clean Environment and Follow the Cleaning Instructions Specified in the Procedures**
  - The engine and its components **must** be kept clean during any repair. Contamination of the engine and components will cause premature wear.
- **Perform the Inspections Specified in the Procedures.**
- **Replace all Components or Assemblies Which are Damaged or Worn Beyond the Specifications**
- **Use Genuine Cummins New or ReCon Service Parts and Assemblies**
  - The assembly instructions have been written to use again as many components and assemblies as possible. When it is necessary to replace a component or assembly, the procedure is based on the use of new Cummins or Cummins ReCon components. All of the repair services described in this manual are available from all Cummins Distributors and most Dealer locations.
- **Follow The Specified Disassembly and Assembly Procedures to Avoid Damage to the Components.**

Complete rebuild instructions are available in the NT 855 Engine Shop Manual, which can be ordered or purchased from a Cummins authorized repair location. Refer to page 1 in the Additional Service Literature Section for ordering instructions.

General Cleaning Instructions

Solvent and Acid Cleaning

Several solvent and acid-type cleaners can be used to clean the engine parts. **Cummins Engine Company, Inc. does not recommend any specific cleaners. Always** follow the cleaner manufacturer's instructions.

Experience has shown that the best results can be obtained using a cleaner that can be heated to 90 to 95 degrees Celsius [180 to 200 degrees Fahrenheit]. A cleaning tank that provides a constant mixing and filtering of the cleaning solution will give the best results.

Remove all the gasket material, O-rings, and the deposits of sludge, carbon, etc., with a wire brush or scraper before putting the parts in a cleaning tank. Be careful **not** to damage any gasket surfaces. When possible, steam clean the parts before putting them in the cleaning tank.

Warning: The use of acid can be extremely dangerous to personnel and can damage the machinery. Always provide a tank of strong soda water as a neutralizing agent.

Rinse all of the parts in hot water after cleaning. Dry completely with compressed air. Blow the rinse water from all of the capscrew holes and the oil drillings.

If the parts are **not** to be used immediately after cleaning, dip them in a suitable rustproofing compound. The rustproofing compound **must** be removed from the parts before installation on the engine.

Steam Cleaning

Steam cleaning can be used to remove all types of dirt that can contaminate the cleaning tank. It is a good way to clean the oil drillings.

Warning: Wear protective clothing to prevent personal injury from the high pressure and extreme heat.

Do **not** steam clean the following parts:

1. Electrical Components
2. Wiring
3. Injectors
4. Fuel Pump
5. Belts and Hoses
6. Bearings

Glass or Plastic Bead Cleaning

Glass or plastic bead cleaning can be used on many engine components to remove carbon deposits. The cleaning process is controlled by the size of the glass or plastic beads, the operating pressure, and the cleaning time.

Caution: Do not use glass or plastic bead cleaning on aluminum piston skirts or ring grooves. Small particles of glass or plastic will embed in the aluminum and result in premature wear. Valves, turbocharger shafts, etc., can also be damaged. Follow the cleaning directions listed in the procedures.

Follow the equipment manufacturer's cleaning instructions. The following guidelines can be used to adapt to the manufacturer's instructions:

1. Bead size: Use U.S. size No. 70 for piston domes.
   Use U.S. size No. 60 for general purpose cleaning.
2. Operating Pressure: Use 620 kPa [90 psi] for general purpose cleaning.
3. Steam clean or wash the parts with solvent to remove all of the foreign material and glass or plastic beads after cleaning. Rinse with hot water. Dry with compressed air.
4. Do **not** contaminate the wash tanks with glass or plastic beads.

Section E - Engine Identification

Table of Contents

	Page No.
Engine Identification	2
General Engine Specifications	3
Engine Diagrams	5

Engine Identification

The model name provides the following engine data:

N T C 400

- 400 = Maximum Rated Horsepower
- C = Custom Rated
- T = Turbocharged
- N = Four Valve Head

N T C C 400

- 400 = Maximum Rated Horsepower
- C = California Certified
- C = Custom Rated
- T = Turbocharged
- N = Four Valve Head

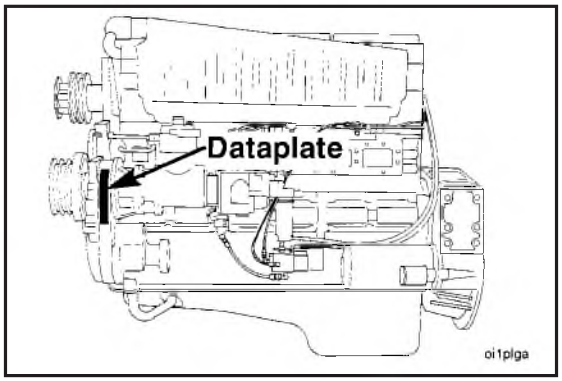

Engine Dataplate

The engine dataplate shows specific information about your engine. The engine serial number (1) and the Control Parts List (CPL) (2) provide information for ordering parts and service needs.

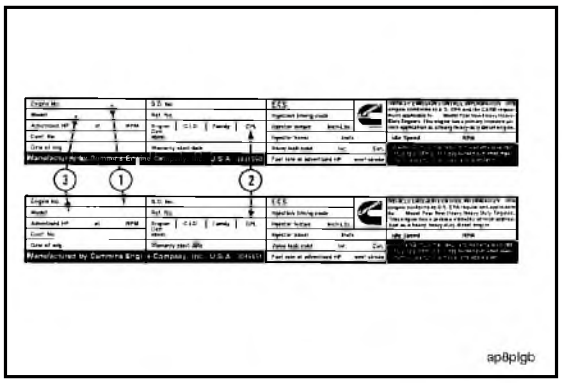

Always record the serial number (1) of the engine, the CPL (Control Parts List) number (2), and the engine model number (3) on all orders for parts. This information is important for fuel pump calibration and correct identification of parts.

NOTE: The engine dataplate **must not** be changed unless approved by Cummins Engine Company, Inc.

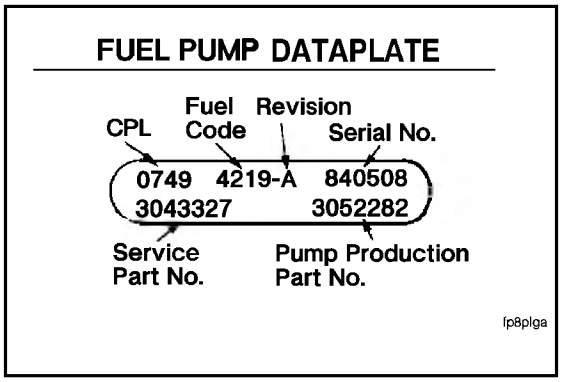

Fuel Pump Dataplate (Nameplate)

The fuel pump dataplate is located on the top of the fuel pump. It provides information for fuel pump calibration.

Engine Specifications

General Engine Data

Horsepower ..... 179 kw (240 BHP) to 354 kw (475 BHP)

Engine Speed@ Maximum Output

- Standard Rating (RPM) 2100
- Formula Rating (RPM) 1800

Bore and Stroke ..... 140 mm [5.5 in.] X 152 mm [6.0 in.]

Displacement ..... 14.0 liters [855 cu. in.]

Compression Ratio ..... 13.5:1 to 17.2:1

Firing Order 1-5-3-6-2-4

Engine Weight (With Standard Accessories)

- Dry Weight ..... 1126 kg [2480 lb.] to 1221 kg [2690 lb.]
- Wet Weight ..... 1180 kg [2600 lb.] to 1276 kg [2810 lb.]

Air Induction System

Maximum allowable turbocharged intake restriction ..... 64 cm H_2O [25 in. H_2O]

Maximum allowable naturally aspirated and Fleet 270 intake restriction ..... 51 cm H_2O [20 in. H_2O]

Lubrication System

Oil pressure at idle (minimum allowable) ..... 70 kPa [10 psi] minimum

At no load governed speed ..... 240-310 kPa [35-45 psi]

Oil capacity of standard engine:

- Bypass filter ..... 2.8 liters [0.75 U.S. gal.]
- Full flow filter ..... 3.5 liters [0.93 U.S. gal.]
- Combo filter ..... 3.9 liters [1.04 U.S. gal.]
- Oil pan capacity (high-low) ..... 36-28 liters [9.5-7.5 U.S. gal.]

Total system capacity including filters ..... 42 liters [11.0 U.S. gal.]

Engine Specifications (Cont'd.)

Cooling System

Coolant capacity (engine only) ..... 21 liters [22 U.S. quarts]

Standard modulating thermostat range

- Conventional aftercooling ..... 82-93°C [180-200°F]
- Optimized aftercooling ..... 79-91°C [175-195°F]

Maximum coolant cylinder block pressure (pressure cap removed) ..... 350 kPa [50 psi]

Maximum allowable operating temperature ..... 100°C [212°F]

Maximum allowable operating temperature for NTC-444 ..... 104°C [220°F]

Minimum recommended operating temperature ..... 70°C [158°F]

Minimum recommended pressure cap ..... 50 kPa [7 psi]

Exhaust System

Maximum allowable back pressure imposed by piping and silencer ..... 1000 mm H_20 [40 in. H_20]

Maximum bending movement to turbocharger flange ..... 27 N•m [20 ft-lb]

Exhaust pipe size (normally acceptable inside diameter **except** NTC 475) ..... 127 mm [5 in.]

- NTC 475 ..... 152 mm [6 in.]

Fuel System

Maximum allowable restriction to pump:

- With clean filter ..... 100 mm Hg [4 in. Hg]
- With dirty filter ..... 200 mm Hg [8 in. Hg]

Maximum allowable fuel return line restriction

- Without check valves ..... 64 mm Hg [2.5 in. Hg]
- With check valves and/or overhead tanks ..... 165 mm Hg [6.5 in. Hg]

Minimum fuel tank vent capability ..... 0.85 m^3/h [30 ft^3/hr]

Electrical System

Battery Size	Ambient Temperatures -18°C (0°F)		0°C (32°F)	
	Cold Cranking Amperes	Reserve Capacity * Amperes	Cold Cranking Amperes	Reserve Capacity Amperes
12 Volt	1800	640	1280	480
24 Volt **	900	320	640	240

* The number of plates within a given battery size determine reserve capacity. Reserve capacity determines the length of time sustained cranking can occur.

** CCA ratings are based on two 12-volt batteries in series.

Engine Diagrams

The following drawings contain information about engine components, filter locations, drain points, and access locations for instrumentation and engine controls.

The information and configuration of components shown in these drawings are of a general nature. Some component locations will vary depending on applications and installations.

Conventional Aftercooling

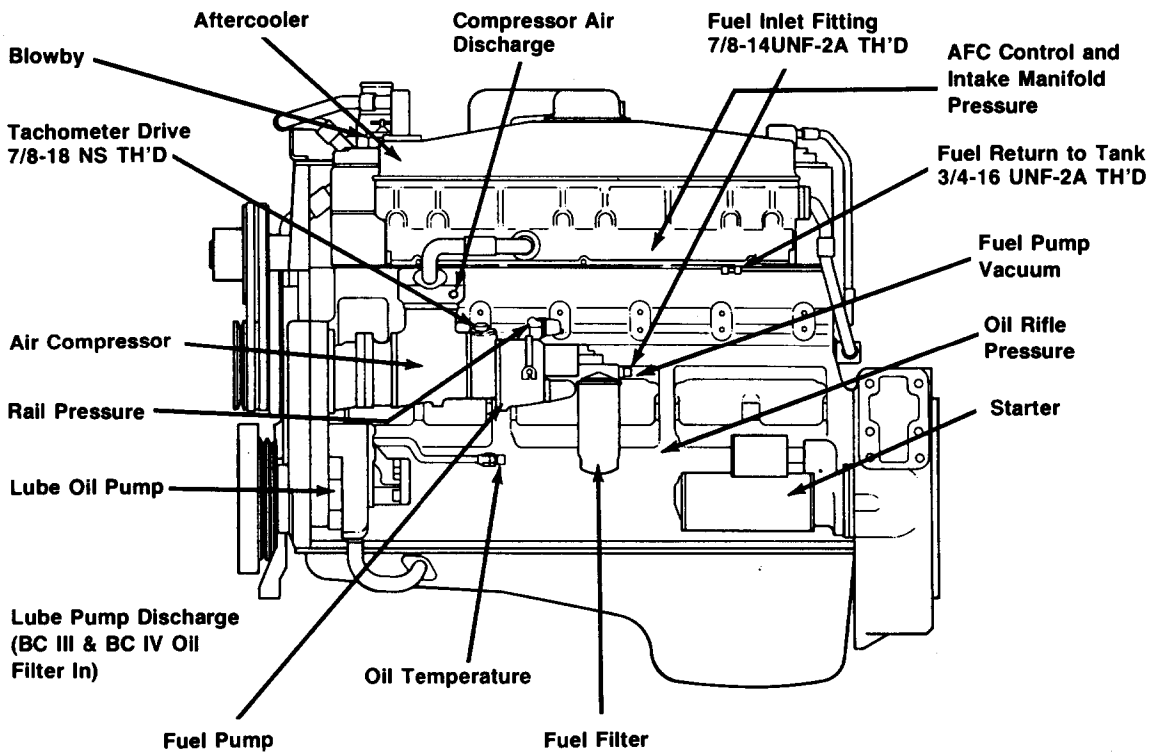

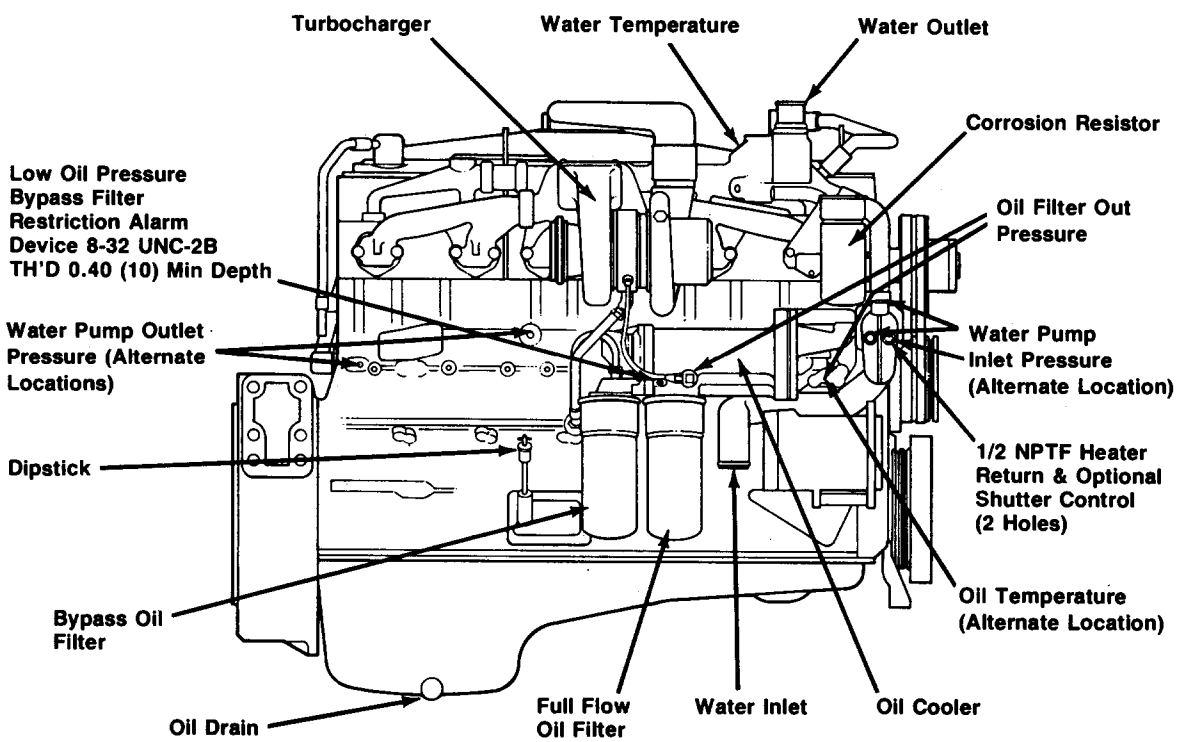

Optimized Aftercooling

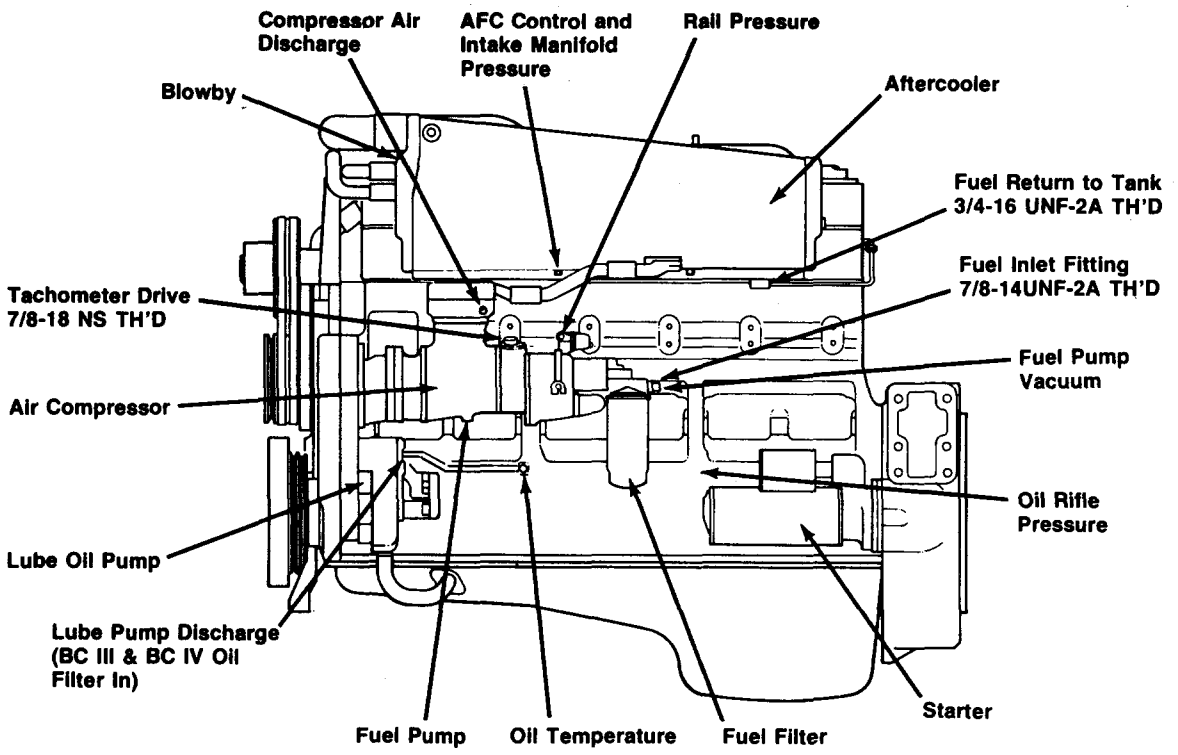

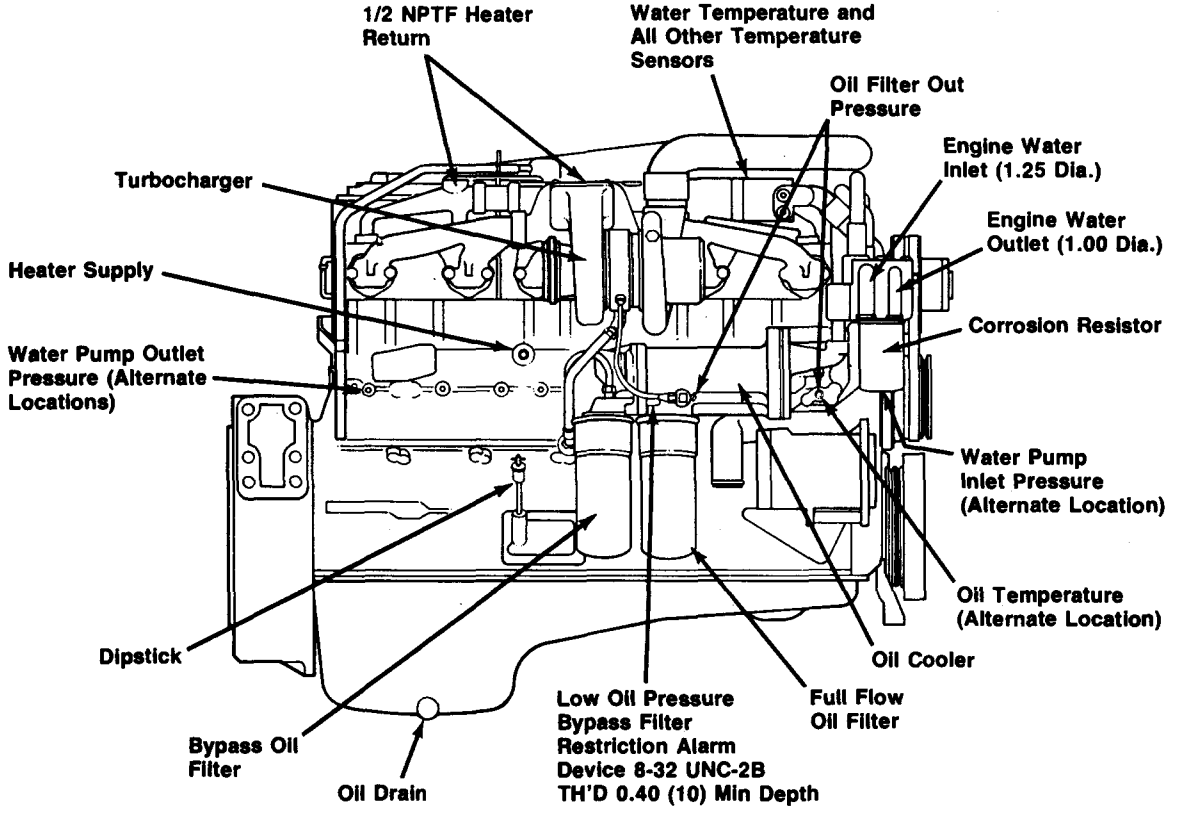

Section T - Troubleshooting

Procedures and Techniques

A thorough analysis of the customer's complaint is the key to successful troubleshooting. The more information known about a complaint, the faster and easier the problem can be solved.

The "Troubleshooting Symptoms Charts" beginning on page 3 are organized so that a problem can be located and corrected by doing the easiest and most logical things first. Complete all steps in the sequence shown from top to bottom.

It is **not** possible to include all the solutions to problems that can occur; however, these charts should stimulate a thought process that will lead to the cause and correction of the problem.

Follow these basic troubleshooting steps:

- Get all the facts concerning the complaint.
- Analyze the problem thoroughly.
- Relate the symptoms to the basic engine systems and components.
- Consider any recent maintenance or repair action that may relate to the problem.
- Double-check before beginning any disassembly.
- Solve the problem by using the logic charts and doing the easiest things first.
- Use Compuchek where applicable to diagnose a problem.
- Determine the cause of the problem and make a thorough repair.
- After repairs have been made, operate the engine to make sure the cause of the problem has been corrected.

Troubleshooting Symptoms

		Page No.
1.	Air Compressor Operates With Excessive Noise	31
2.	Air Compressor Pumping Excessive Lubricating Oil Into Air System	28
3.	Air Compressor Air Pressure Rises Slowly	26
4.	Air Compressor Will Not Maintain Adequate Air Pressure (Not Pumping Continuously)	27
5.	Air Compressor Will Not Pump Air Pressure	29
6.	Air Compressor Will Not Stop Pumping Air	30
7.	Alternator Malfunctioning	62
8.	Connecting Rod Bearing Noise	72
9.	Coolant in the Lubricating Oil	21
10.	Coolant Loss (External)	9
11.	Coolant Loss (Internal)	11
12.	Coolant Loss (Overflow)	8
13.	Coolant Temperature Above Normal	3
14.	Coolant Temperature Below Normal	6
15.	Engine Crankcase Gases (Blowby) - Excessive	63
16.	Engine Cranks, But Will Not Start (No Exhaust Smoke)	32
17.	Engine Decelerates Poorly	52
18.	Engine Hard to Start, or Will Not Start (Exhaust Smoke Present)	34
19.	Engine Power Output Low	45
20.	Engine Noise - Excessive *	65
21.	Engine Runs Rough or Misfires In Operating Range (Warm Engine)	38
22.	Engine Starts But Will Not Keep Running	36
23.	Engine Surges at High Idle	54
24.	Engine Surges at Low Idle	42
25.	Engine Surges While Operating at Rated RPM and Load	53
26.	Engine Vibration - Excessive	64
27.	Engine Will Not Crank or Cranks Slowly	61
28.	Engine Will Not Reach Rated Speed When Loaded	43
29.	Engine Will Not Shut Off	51
30.	Excessive White Smoke at Idle	68
31.	Exhaust Smoke Under Load - Excessive	49
32.	Fuel Consumption - Excessive	60
33.	Fuel in the Coolant	12
34.	Fuel in the Lubricating Oil	22
35.	Idle - Rough	40
36.	Low Power or Excessive Smoke (Low Turbocharger Boost Pressure)	24
37.	Lubricating Oil Consumption - Excessive	18
38.	Lubricating or Hydraulic Oil in the Coolant	17
39.	Lubricating Oil Pressure-High	15
40.	Lubricating Oil Pressure-Low	13
41.	Lubricating Oil Sludge in the Crankcase - Excessive	20
42.	Lubricating Oil Temperature Above Normal	16
43.	Main Bearing Noise	71
44.	Mechanical Variable Timing Will Not Switch to Advanced or Retarded Timing Mode	66
45.	Piston Noise	73
46.	Surge in Top Gear - Road Speed Governor Not Set Correctly	55
47.	Throttle Response Slow (Engine Dies Going Downhill)	59
48.	Turbocharger Leaks (Engine Oil or Fuel)	25
49.	Turbocharger Noise	23
50.	Variable Speed (VS) Governor Surge - Engine Under Load	56
51.	Variable Speed (VS) Governor (Fuel Leakage at)	57
52.	Variable Speed (VS) Governor Speed Not Set Correctly	58
53.	White Smoke - General Information	67

*Refer to "General Engine Noise Diagnostic Procedures" on page 70 for appropriate diagnostic procedures.

COOLANT TEMPERATURE ABOVE NORMAL

Cause	Corrections
Low Coolant Level	Add coolant. Refer to Procedure 1-07.
OK	
Radiator Fins Damaged or Obstructed with Debris	Inspect radiator fins. Refer to Procedure 1-26.
OK	
Collapsed or Restricted Radiator Hose	Inspect hoses. Refer to Procedure 1-13.
OK	
Loose Fan Drive or Water Pump Belt	Check belt tension and tighten if necessary. Refer to Procesures 1-20 and 1-29.
OK	
Incorrect Oil Level	Add or drain engine oil. Refer to Procedures 2-10 and 2-09. Check dipstick calibration. Refer to Procedure 2-14.
OK	
Cooling Fan Shroud Damaged or Missing	Inspect shroud. Repair, replace, or install. Refer to Procedure 1-18.
OK	
Incorrect or Malfunctioning Radiator Cap	Check the radiator pressure cap. Refer to Procedure 1-15.
OK	
Temperature Gauge Malfunctioning	Test the gauge. Repair or replace if necessary. Refer to Procedure 1-14.
OK	

(Continued)

COOLANT TEMPERATURE ABOVE NORMAL (CONTINUED)

Cause	Corrections
Radiator Shutters Are Not Opening Completely or Cold Weather Radiator Cover Closed	Inspect the shutters. Repair or replace if necessary. Open radiator cover. Refer to Procedure 1-17.
OK	
ON-OFF Fan Clutch or Viscous Fan Drive Malfunctioning	Check fan drive. Refer to Procedures 1-21 and 1-25.
OK	
Install Compuchek , If Available	Perform cooling system test. Refer to ‘‘Compuchek Operation Manual,’’ Bulletin No. 3377550.
OK	
Aftercooler Filter Screen Plugged (BC IV Only)	Check aftercooler screen. Refer to Procedure 1-42.
OK	
Air in the Cooling System	Check for air in the cooling system. Refer to Procedure 1-11.
OK	
Overconcentration of Antifreeze and/ or Supplemental Coolant Additives	Check concentration. Refer to Procedure 1-09.
OK	
Incorrect or Malfunctioning Thermostat	Check thermostat. For BC III refer to Procedures 1-29 and 1-31. For BC IV refer to Procedures 1-33 and 1-34.
OK	

(Continued)

COOLANT TEMPERATURE ABOVE NORMAL (CONTINUED)

Cause	Corrections
Coolant Leakage Between Radiator Core and Bottom or End Tank Baffle Seal (BC IV Only)	Check/repair radiator. Refer to Procedure 1-44.
OK	
Radiator Check Valve Leaking or Leak Between the Top Tank and the Auxiliary Tank (BC IV Only)	Check for coolant leakage between radiator auxiliary tank and radiator top tank. Also, for check valve leakage refer to Procedure 1-41.
OK	
Water Manifold Orifices Deteriorated/Missing (BC IV Only)	Check water manifold orifices. Refer to Procedure 1-43.
OK	
Water Pump Malfunctioning	Replace the water pump. Refer to Procedure 1-28.
OK	
Engine is Receiving too Much Fuel	Check the engine fuel rate. Refer to Procedure 5-05.
OK	
Obstructed or Damaged Radiator Core (Internal)	Inspect radiator. Clean if necessary. Refer to Procedure 1-10.
OK	
Obstructed or Damaged Aftercooler/Oil Cooler	Inspect aftercooler and oil cooler. Refer to Procedures 3-16 and 2-20.
OK	
Vehicle Cooling System Not Designed to Operate Continuously in High Ambient Temperature.	Contact vehicle manufacturer for optional radiator and fan.

COOLANT TEMPERATURE BELOW NORMAL

Cause	Corrections
Continuously Operating in Low Ambient Temperature	Refer to Bulletin No. 3387266-R (Cold Weather Operation).
OK	
Radiator Shutters Stuck in Open Position, or Opening Early	Inspect the shutters - repair or replace if necessary. Refer to Procedure 1-17.
OK	
Temperature Gauge Malfunctioning	Test the gauge - repair or replace if necessary. Refer to Procedure 1-14.
OK	
ON-OFF Fan Clutch Operates Continuously	Check on-off fan drive. Refer to Procedure 1-21.
OK	
Viscous Fan Drive Operates Continuously	Check viscous fan drive. Refer to Procedure 1-25.
OK	
Install Compuchek , If Available	Perform cooling system test. Refer to ‘‘Compuchek Operation Manual’’, Bulletin No. 3377550.
OK	
Damaged, Missing, or Incorrectly Located Thermostat Seal or Seat (BC III) or Seat (BC IV)	Check thermostat seal or seat. BC III, refer to Procedure 1-32; BC IV, refer to Procedures 1-37 and 1-38.
OK	

(Continued)

COOLANT TEMPERATURE BELOW NORMAL (CONTINUED)

Cause	Corrections
Incorrect or Malfunctioning Thermostat	Check thermostat - replace if necessary. BC III, refer to Procedures 1-29 and 1-31. BC IV, refer to Procedures 1-33 and 1-34.
OK	
Radiator Check Valve Leaking or Leak Between the Top Tank and the Auxiliary Tank (BC IV Only)	Check for coolant leakage between radiator auxiliary tank and radiator top tank. Also, for check valve leakage, refer to Procedure 1-41.

LOSS OF ENGINE COOLANT (OVERFLOW)

Cause	Corrections
Radiator Overfilled	Drain coolant to specified level. Refer to Procedure 1-06.
OK	
Dirt, Scale, or Sludge in the Cooling System	Clean cooling system. Refer to Procedure 1-10.
OK	
Restricted or Obstructed Coolant Fill Line	Check line for restrictions and obstructions. Refer to Procedure 1-13.
OK	
Coolant Frozen Due to Incorrect Antifreeze Concentration	Check coolant antifreeze concentration. Refer to Procedure 1-05.
OK	
Air Induced into the Cooling System From Defective Fan or Shutter Control Valves	Check fan and/or shutter control. Refer to Procedure 1-11.
OK	
Engine Overheating	Refer to ''Coolant Temperature Above Normal'' Symptom Chart on page 3.
OK	
Combustion Gases or Intake Manifold Pressure Entering the Cooling System	Check the cylinder head, head gasket, cylinder liner, and aftercooler for leaks. Refer to Procedure 1-11.

LOSS OF ENGINE COOLANT (EXTERNAL LEAKAGE)

Cause	Corrections
Incorrect or Malfunctioning Radiator Cap	Check the radiator pressure cap. Refer to Procedure 1-15.
OK	
Hose Clamps Loose	Inspect hose clamps. Tighten to 5N•m [40 in-lb] torque.
OK	
Leaking Hoses	Inspect hoses. Replace if necessary. Refer to Procedure 1-13.
OK	
Coolant Draincocks Leaking	Check, tighten, or replace if necessary.
OK	
Coolant Expansion Plugs, Pipe Plugs, or Fittings Leaking	Inspect coolant plugs. Tighten or replace if necessary. Refer to Procedure 7-43.
OK	
Radiator Core Leaking	Inspect radiator. Refer to Procedure 1-12.
OK	
Gaskets Leaking or Installed Incorrectly	Inspect gasket sealing surfaces, and install new gaskets.
OK	
Air Compressor or Cylinder Head Gasket Leaking	Check gaskets, Replace if necessary. Refer to Procedure 1-11.
OK	

(Continued)

LOSS OF ENGINE COOLANT (EXTERNAL LEAKAGE) (CONTINUED)

Cause	Corrections
Aftercooler Leaking (BC IV Only)	Inspect aftercooler. Replace if necessary. Refer to Procedure 1-12.
OK	
Lubricating Oil Cooler Leaking	Inspect lubricating oil cooler. Refer to Procedure 1-12.
OK	
Water Pump Seal Leaking	Replace the water pump. Refer to Procedure 1-28.

LOSS OF ENGINE COOLANT (INTERNAL LEAKAGE)

Cause	Corrections
Air Compressor Cylinder Head Cracked, Porous, or Gasket Leaking	Isolate air compressor and test for air in cooling system. Refer to Procedure 1-11.
OK	
Aftercooler Leaking	Isolate aftercooler core and test for air in cooling system. Refer to Procedure 1-11.
OK	
Lubricating Oil Cooler Leaking	Inspect lubricating oil cooler. Refer to Procedure 2-21.
OK	
Cylinder Head Gasket Leaking	Check for coolant leaks. Refer to Procedure 1-48.
OK	
Cylinder Head Cracked/Porous or Cylinder Head Gasket Leaking	Test for air or combustion gases in cooling system. Refer to Procedure 1-11.
OK	
Injector Sleeves Incorrectly Seated or Damaged	Test for air or combustion gases in cooling system. Refer to Procedure 1-11.
OK	
Cylinder Liner Cracked/Porous or Crevice Seals Leaking	Check for cylinder liner and crevice seal damage. Refer to Procedure 1-48.
OK	
Cylinder Block Cracked or Porous	Check cylinder block. Refer to Procedure 1-48.

FUEL IN COOLANT

Cause	Corrections
Fuel Heater Malfunctioning	Replace the fuel heater. Refer to the equipment manufacturer's recommendations.
OK	
Cylinder Head Injector Sleeve Leaking	Pressurize the cooling system and inspect the injector sleeves. Refer to Procedures 1-12 and 7-12.
OK	
Cracked Cylinder Head	Pressurize the cooling system and inspect the cylinder head. Refer to Procedures 1-12 and 7-12.

LOW LUBRICATING OIL PRESSURE

Cause	Corrections
Incorrect Oil Level	Check for oil leaks. Add or drain engine oil. Refer to Procedures 2-09 and 2-10. Check dipstick calibration. Refer to Procedure 2-14.
OK	
Oil Pressure Gauge Malfunctioning	Check oil pressure gauge. Refer to Procedure 2-07.
OK	
Oil Diluted With Fuel	Refer to ''Fuel in the Lubricating Oil'' Symptom Chart on page 22.
OK	
Incorrect Oil Specifications	Change oil and check oil specifications. Refer to ''NT Operation and Maintenance Manual,'' Bulletin No. 3810238.
OK	
Oil Temperature Above Normal (120°C [250°F])	Refer to ''Lubricating Oil Temperature Above Normal'' Symptom Chart on page 16.
OK	
Install Compuchek , If Available	Perform lubricating system test. Refer to ''Compuchek Operation Manual,'' Bulletin No. 3377550.
OK	
Oil Transfer or Suction Tube Broken	Remove and inspect oil pan. Refer to Procedure 2-16.
OK	
Main Oil Pressure Regulator Malfunctioning	Inspect main oil pressure regulator assembly. Refer to Procedure 2-22.
OK	

(Continued)

LOW LUBRICATING OIL PRESSURE (CONTINUED)

Cause	Corrections
DFC Lubricating Oil Pump Signal Orifice Restricted or Plugged	Clean the signal line orifice. Refer to Procedures 2-23 and 2-24.
OK	
High Oil Pressure Relief Valve Malfunctioning	Inspect high oil pressure relief valve assembly. Refer to Procedure 2-27.
OK	
Oil Cooler Plugged	Inspect oil cooler. Refer to Procedure 2-19.
OK	
Internal Engine Damage	Analyze the lubricating oil. Refer to Procedure 2-05. Inspect the full flow oil filter. Refer to Procedure 2-05.
OK	
Lubricating Oil Pump Malfunctioning	Inspect lubricating oil pump. Refer to Procedure 2-25.

HIGH LUBRICATING OIL PRESSURE

Cause	Corrections
Oil Pressure Gauge Malfunctioning	Check oil pressure gauge. Refer to Procedure 2-07.
OK	
Oil Temperature Too Low	Check oil cooler bypass valve operation. Refer to Procedure 2-17.
OK	
Incorrect Oil Specifications	Change the oil and check oil specifications. Refer to ''NT Operationa nd Maintenance Manual,'' Bulletin No. 3810238.
OK	
Wrong Oil Pressure Gauge Location	Check gauge location. Refer to Procedure 2-07.
OK	
Install Compuchek , If Available	Perform lubricating system test. Refer to ''Compuchek Operation Manul,'' Bulletin No. 3377550.
OK	
Main Oil Pressure Regulator Malfunctioning	Check main oil pressure regulator assembly. Refer to Procedure 2-22.

LUBRICATING OIL TEMPERATURE ABOVE NORMAL

Cause	Corrections
Incorrect Oil Level	Add or drain engine oil. Refer to Procedures 2-09 and 2-10. Check dipstick calibration. Referto Procedure 2-14.
OK	
High Engine Coolant Temperature (Above 100°C [212°F])	Check coolant level and thermostat operation. Refer to Procedures 1-07, 1-29, 1-31, 1-33, and 1-34.
OK	
Oil Temperature Gauge Malfunctioning	Check gauge. Refer to Procedure 2-07.
OK	
Oil Cooler Bypass Valve Malfunctioning	Check the oil cooler bypass valve. Refer to Procedure 2-17.
OK	
Vehicle Overloaded	Reduce vehicle load or use lower gear.

LUBRICATING OR HYDRAULIC OIL IN THE COOLANT

Cause	Corrections
Lubricating Oil Cooler Malfunctioning	Inspect oil cooler. Refer to Procedure 2-20.
OK	
Hydraulic Oil Cooler Malfunctioning	Inspect hydraulic oil cooler. Refer to manufacturer's specifications.
OK	
Cylinder Head Gasket Leakage	Replace cylinder head gasket. Refer to Procedure 7-11.
OK	
Cylinder Head Cracked or Porous	Inspect ylidner head. Refer to procedure 7-12.
OK	
Cylinder Block Cracked or Porous	Inspect cylinder block. Refer to Procedure 1-12.

EXCESSIVE LUBRICATING OIL CONSUMPTION

Cause	Corrections
External Oil Leaks	Tighten capscrews, pipe plugs, and fittings. Refer to ''Specifications,'' Section 10.
OK	
Blowby Restriction Causing External Oil Leaks	Check crankcase breather and tube. Refer to Procedure 2-12. Repair oil leaks. Refer to Procedure 2-06.
OK	
Incorrect Dipstick Calibration	Check dipstick calibration and guide tube. Refer to Procedures 2-13 and 2-14.
OK	
Incorrect Oil Specifications	Change oil and check oil specifications. Refer to ''NT Operation and Maintenance Manual,'' Bulletin No. 3810238.
OK	
Oil Contaminated with Fuel	Refer to ''Fuel in the Lubricationg Oil'' Symptom Chart on page 22.
OK	
Extended Oil Change Intervals	Check and revise oil change intervals. Refer to ''NT Operation and Maintenance Manual,'' Bulletin No. 3810238.
OK	
High Oil Temperature (Above 120°C [250°F])	Check engine oil and coolant levels. Refer to Procedures 2-10 and 1-07.
OK	
Air Compressor Pumping Oil	Check air compressor operation. Refer to Procedure 4-09.
OK	

(Continued)

EXCESSIVE LUBRICATING OIL CONSUMPTION (CONTINUED)

Cause	Corrections
Turbocharger Seal Malfunctioning	Check turbocharger for oil leaks. Refer to Procedure 3-05.
OK	
Intake Valve Guides Leaking	Check blowby*. Refer to Procedure 8-01. Check valve guides. Refer to ''NT Engine Shop Manual'', Bulletin No. 3379076.
OK	
Piston Rings Not Seated Properly After Engine Rebuild	Check blowby*. Refer to Procedure 8-01. Refer to ''NT Operation and Maintenance Manual'', Bulletin No. 3810238, for break-in procedures. Inspect and replace piston rings. Refer to Procedure 7-22.
OK	
Piston Rings Worn or Broken	Check blowby*. Refer to Procedure 8-01. Inspect and replace piston rings if necessary. Refer to Procedure 7-22. Check air intake system for leaks. Refer to Procedure 3-10.
OK	
Piston Ring Grooves Worn	Check blowby*. Refer to Procedure 8-01. Inspect and replace pistons if necessary. Refer to Procedure 7-22.
OK	
Cylinder Liners Scored or Damaged	Check blowby*. Refer to Procedure 8-01. Inspect and replace liners if necessary. Refer to Procedure 7-24.

*Also refer to ''Excessive Crankcase Gases (Blowby)'' Symptom Chart on page 63 for other possible causes of excessive blowby.

EXCESSIVE LUBRICATING OIL SLUDGE IN THE ENGINE CRANKCASE

Cause	Corrections
Incorrect Lubricating Oil Specifications	Check lubricating specifications. Refer to "NT Operation and Maintenance Manual," Bulletin No. 3810238.
OK	
Incorrect Fuel Grade	Check fuel oil specifications. Refer to Reference 5-02.
OK	
Oil Filter(s) Dirty	Replace oil filter(s). Refer to Procedure 2-11.
OK	
Incorrect Oil Drain Interval	Check oil drain interval. Refer to "NT Operation and Maintenance Manual," Bulletin No. 3810238.
OK	
Engine Coolant Temperature Too Low (Below 60°C [140°F])	Check coolant thermostat operation. Refer to Procedures 1-29, 1-31, 1-33, and 1-34.
OK	
Internal Coolant Leaks	Pressure test the cooling system. Refer to Procedure 1-12.

COOLANT IN THE LUBRICATING OIL

Cause	Corrections
Lubricating Oil Cooler Malfunctioning	Inspect oil cooler. Refer to Procedure 2-20.
OK	
Cylinder Head Gasket Leaking	Replace the cylinder head gasket. Refer to Procedure 7-10.
OK	
Cylinder Liner Cracked/Porous or Crevice Seals Leaking	Check for cylinder liner or crevice seal damage. Refer to Procedure 1-12.
OK	
Cylinder Block Cracked or Porous	Check cylinder block. Refer to Procedure 1-48.

FUEL IN THE LUBRICATING OIL

Cause	Corrections
Low Oil and Coolant Temperatures Caused by Long Periods of Engine Idling	Turn off engine rather than idle for long periods. If long idle is necessary, raise idle speed. Refer to Procedure 5-05.
OK	
Top Injector O-Ring Damaged	Check the injectors. Replace o-rings if necessary. Refer to Procedure 5-06.
OK	
Injector Plunger Damaged	Remove the injector. Refer to Procedure 5-06. Check the barrel to plunger leakage. Refer to ''Injectors PT Rebuild Manual,'' Bulletin No. 3379071.
OK	
Injector Adapter Wall Damaged Behind Balance Orifice	Check the injectors. Refer to Procedure 5-14.
OK	
Injector Cup Damaged	Check the injector cups. Refer to ''Injectors PT Rebuild Manual,'' Bulletin No. 3379071.
OK	
Fuel Pump Main Shaft Seals Damaged	Replace the fuel pump. Refer to Procedure 5-07.
OK	
Cylinder Head Cracked or Porous	Replace the cylinder head. Refer to Procedure 7-12.

TURBOCHARGER NOISE

Cause	Corrections
Incorrect Turbocharger Installed	Check for correct turbocharger installed. Refer to Procedure 3-07.
OK	
Intake or Exhaust Air Leaks	Check for loose or damaged piping. Refer to Procedure 3-10.
OK	
Excessive Intake Air Restriction	Check intake air restriction. Refer to Procedure 3-08.
OK	
Excessive Exhaust Restriction	Check exhaust restriction. Refer to Procedure 3-09.
OK	
Turbocharger Compressor Impeller or Turbine Wheel Damage	Check compressor impeller and turbine wheel for damage. Refer to Procedure 3-11.
OK	
Turbocharger Bearing Damage	Check axial and radial clearance. Refer to Procedure 3-12.

LOW POWER OR EXCESSIVE SMOKE (LOW TURBOCHARGER BOOST PRESSURE)

Cause	Corrections
Install Compuchek , If Available	Perform low power test. Refer to ''Compuchek Operation Manual,'' Bulletin No. 3377550.
OK	
Incorrect Turbocharger Installed	Check for correct turbocharger installed. Refer to Procedure 3-07.
OK	
Dirty Air Filter Element	Check air filter element. Refer to Procedure 3-08.
OK	
Intake or Exhaust Air Leaks	Check for loose or damaged air piping. Refer to Procedure 3-10.
OK	
Excessive Intake Air Restriction	Check intake air restriction. Refer to Procedure 3-08.
OK	
Excessive Exhaust Restriction	Check exhaust restriction. Refer to Procedure 3-09.
OK	
Turbocharger Bearing Damage	Check axial and radial clearance. Refer to Procedure 3-12.
OK	
Fuel System Malfunctioning	Refer to ''Exhaust Smoke Excessive Under Load'' Symptom Chart on page 49.

TURBOCHARGER LEAKS (ENGINE OIL OR FUEL)

Cause	Corrections
Turbocharger Turbine Seal Leak	Check turbine seal for leaks. Refer to Procedure 3-05.
OK	
Excessive Engine Crankcase Gases (Blowby)	Check engine crankcase gases (blowby). Refer to Procedure 8-01.

AIR COMPRESSOR AIR PRESSURE RISES SLOWLY

Cause	Corrections
Air System Leaks	Check for air compressor gasket leaks. Refer to Procedure 4-06. Refer to the manufacturer's instructions for other air system leaks.
OK	
Excessive Carbon Buildup in the Air Discharge Line	Inspect the discharge line. Refer to Procedure 4-05.
OK	
Air System Component is Malfunctioning	Check operation of check valves, alcohol evaporators, air driers, etc. Refer to the manufacturer's instructions.
OK	
Air Compressor Unloader Valve Assembly Malfunctioning	Check unloader valve operation. Refer to Procedure 4-10.
OK	
Air Compressor Intake or Exhaust Valve Air Leaks	Inspect the intake and exhaust valve assemblies. Refer to Procedure 4-05.

AIR COMPRESSOR WILL NOT MAINTAIN ADEQUATE AIR PRESSURE (NOT PUMPING CONTINUOUSLY)

Cause	Corrections
Excessive Air System Leaks	Check air system plumbing. Refer to the manufacturer's specifications.
OK	
Air Governor is Malfunctioning or Not Set Correctly	Refer to the manufacturer's specifications.

EXCESSIVE AMOUNT OF OIL PASSING THROUGH AIR COMPRESSOR

Cause	Corrections
Air Compressor Cylinder Bore or Piston Rings are Worn or Damaged	Check air compressor discharge port. Refer to Procedure 4-09.

AIR COMPRESSOR WILL NOT PUMP AIR PRESSURE

Cause	Corrections
The Air Governor is Malfunctioning or Not Set Correctly	Check air governor operation. Refer to Procedure 4-08.

OK

Air Compressor Unloader Valve Assembly is Malfunctioning	Check the unloader valve operation. Refer to Procedure 4-10.

AIR COMPRESSOR WILL NOT STOP PUMPING AIR

Cause	Corrections
Air System Leaks	Check air compressor for gasket leaks. Refer to Procedure 4-06. Refer to the manufacturer's instructions for other air system leaks.
OK	
Air Compressor Unloader Valve is not Receiving Correct Signal from the Air Governor	Check theair governor operation. Refer to Procedure 4-07.
OK	
Air Compressor Unloader Valve Assembly Leaks	Check the unloader valve operation. Refer to Procedure 4-10.
OK	
Wrong Air Compressor Unloader Valve Spring being Used	Check the unloader valve spring specifications and application. Refer to Reference 4-02.

EXCESSIVE AIR COMPRESSOR NOISE

Cause	Corrections
The Air Compressor is not Timed Correctly	Check the air compressor timing marks to the accessory drive shaft. Refer to Procedure 4-12.
OK	
Excessive Carbon Buildup in the Air Compressor	Check the air compressor for carbon buildup. Refer to Procedure 4-05.
OK	
Internal Air Compressor Damage	Replace the air compressor. Refer to Procedure 4-12.

ENGINE CRANKS, BUT WILL NOT START (NO SMOKE FROM EXHAUST)

Cause	Corrections
No Fuel In Tank	Add fuel. Refer to Reference 5-02.
OK	
Shutoff Valve Closed	Use manual override. Repair electrics. Refer to Procedure 5-10.
OK	
No Fuel To Injectors	Loosen fuel rail line between fuel pump and cylinder head while cranking engine. Refer to Procedure 5-11.
OK	
Fuel Connections Loose on Suction Side of Fuel Pump	Tighten all fuel filter fittings and connections from fuel tank to fuel pump. Refer to Procedure 5-12.
OK	
Fuel Filter Plugged or Suction Line Restricted	Replace fuel filter. Inspect fuel hose for restriction. Refer to Procedures 5-08 and 5-15.
OK	
No Fuel in Pump	Prime fuel pump. Refer to Procedure 5-11.
OK	
Intake or Exhaust System Restricted	Check intake and exhaust system for restrictions. Refer to Procedures 3-08 and 3-09.
OK	
Fuel Pump Not Turning	Check tachometer shaft for rotation while cranking. Replace pump if necessary. Refer to Procedure 5-11.
OK	

(Continued)

ENGINE CRANKS, BUT WILL NOT START (NO SMOKE FROM EXHAUST) (CONTINUED)

Cause	Corrections
Gear Pump Shaft Broken	Check rotation and suction of gear pump while cranking. Replace. Refer to Procedure 5-11.
OK	
AFC ‘‘No-Air’’ Screw Adjusted All the Way In	Adjust AFC ‘‘no-air’’ screw. Refer to Procedure 5-05.
OK	
Gear Pump Check Valve Stuck Open	Replace check valve. Refer to Procedure 5-08.
OK	
Gear Pump Worn	Replace fuel pump. Refer to Procedure 5-07.
OK	
Camshaft Broken	Check rocker lever movement while rotating the engine. Refer to Procedure 7-04.

ENGINE HARD TO START OR WILL NOT START (EXHAUST SMOKE PRESENT)

Cause	Corrections
Engine Cranking Speed Low (Below 150 RPM)	Check engine cranking RPM. Refer to Reference 6-02.
OK	
Engine Driven Units Engaged	Disengage engine driven units. Refer to "NT Operation and Maintenance Manual," Bulletin No. 3810238.
OK	
Cold Start Aid Needed or Not Working Correctly	Refer to "Cold Climate Service," Bulletin No. 3379009.
OK	
Fuel Filter Plugged	Replace fuel filter. Refer to Procedure 5-08.
OK	
Air In The Fuel System	Check for air in fuel, tighten fuel connections, tighten filter, check tank stand pipe, check road speed governor. Refer to Procedure 5-12.
OK	
Fuel Suction Line Restricted	Inspect fuel lines. Refer to Procedure 5-15.
OK	
Intake Air System Restricted	Check intake air restriction. Refer to Procedure 3-08.
OK	

(Continued)

ENGINE HARD TO START OR WILL NOT START (EXHAUST SMOKE PRESENT) (CONTINUED)

Cause	Corrections
Fuel Contaminated	Verify by operating engine from a temporary supply tank.
OK	
AFC ''No-Air'' Screw Adjusted Wrong	Adjust AFC ''no-air'' screw. Refer to Procedure 5-05.

ENGINE STARTS BUT WILL NOT KEEP RUNNING

Cause	Corrections
Air In the Fuel System	Check for air in fuel, tighten fuel connections, tighten filter, check tank stand pipe, check road speed governor. Refer to Procedure 5-12.
OK	
Engine Driven Units Engaged	Disengage engine driven units. Refer to ''NT Operation and Maintenance Manual,'' Bulletin No. 3810238.
OK	
Fuel Filter Plugged or Fuel Waxing Due to Cold Weather	Replace fuel filter. Refer to Procedure 5-08. Refer to ''Cold Climate Service,'' Bulletin No. 3379009.
OK	
Fuel Suction Line Restricted	Inspect fuel lines. Refer to Procedure 5-15.
OK	
Fuel Contaminated	Verify by operating engine from a temporary supply tank.
OK	
Idle Speed Low	Adjust engine idle speed. Refer to Procedure 5-05.
OK	
AFC ''No-Air'' Screw Adjusted Wrong	Adjust AFC ''no-air'' screw. Refer to Procedure 5-05.
OK	
Intake or Exhaust System Restricted	Check intake and exhaust restriction. Refer to Procedures 3-08 and 3-09.
OK	

(Continued)

ENGINE STARTS BUT WILL NOT KEEP RUNNING (CONTINUED)

Cause	Corrections
Engine Brake Adjusted Wrong	Adjust engine brake. Refer to Procedure 7-05.
OK	
Injector Cup Spray Holes Plugged	Remove injectors and clean cups. Refer to Procedure 5-06. Injector test required. Refer to ''Injectors PT Rebuild Manual,'' Bulletin No. 3379071.
OK	
Injection Timing Set Wrong	Check injection timing adjustment procedure. Refer to Procedures 7-17 and 7-18.

WARM ENGINE RUNS ROUGH OR MISFIRES IN OPERATING RANGE

Cause	Corrections
Air In Fuel	Check for air in fuel, tighten fuel connections, tighten filter, check tank stand pipe, check road speed governor. Refer to Procedure 5-12.
OK	
Engine Brake Adjusted Wrong	Adjust engine brake. Refer to Procedure 7-05.
OK	
Fuel Contaminated	Verify by operating engine from a temporary supply tank.
OK	
Install Compuchek , if Available	Check the Compuchek fault codes.
OK	
Valve or Injector Adjusted Wrong	Check valve and injector settings. Refer to Procedure 7-04.
OK	
Rocker Lever Broken, Push Rods Bent, or Valves Damaged	Inspect parts. Refer to Procedures 7-08 and 7-09.
OK	
Injectors Defective	Locate defective injector. Refer to Procedure 5-13. Check on test stand.
OK	

(Continued)

WARM ENGINE RUNS ROUGH OR MISFIRES IN OPERATING RANGE (CONTINUED)

Cause	Corrections
Camshaft Damaged	Inspect camshaft. Refer to Procedure 7-36.
OK	
* Injection Timing Set Wrong	Adjust injection timing. Refer to Procedures 7-17 and 7-18.

* Compuchek does **not** test for this cause.

ROUGH IDLE

Cause	Corrections
Install Compuchek , if Available	Perform cylinder performance test. Refer to "Compuchek Operation Manual," Bulletin No. 3377550.
OK	
Engine Idle Speed Low	Check and adjust low idle speed. Refer to Procedure 5-05.
OK	
Air In Fuel	Check for air in fuel, tighten lines, fittings, and filter. Refer to Procedure 5-12.
OK	
Engine Brake Adjusted Wrong	Adjust engine brake. Refer to Procedure 7-05.
OK	
Injector Adjustment Wrong	Check injector settings. Refer to Procedure 7-04.
OK	
Injectors Defective	Remove, check calibration, and check for plugged cups. Refer to Procedure 5-06.
OK	
Fuel Pump Defective	Remove, check calibration, and check for leaks. Refer to Procedure 5-07.
OK	
* Injection Timing Wrong	Check engine timing. Refer to Procedures 7-17 and 7-18.
OK	

(Continued)

* Compuchek does **not** test for this cause.

ROUGH IDLE (CONTINUED)

Cause	Corrections
* Engine Mounts Defective	Check engine mounts. Refer to Procedure 9-04 or manufacturer's specifications.
OK	
Valves Damaged or Worn	Check for leaking valves. Refer to Procedure 7-11.

* Compuchek does **not** test for this cause.

ENGINE SURGES AT LOW IDLE

Cause	Corrections
Air In Fuel System	Check for air in fuel, tighten fuel connections, tighten filter, check tank stand pipe, check road speed governor. Refer to Procedure 5-12.
OK	
Engine Idle Speed Set Low	Check and adjust low idle screw. Refer to Procedure 5-05.
OK	
Automotive and VS Governor Idle Speed Set Too Close	Adjust automotive idle speed. Adjust VS idle speed. Refer to Procedure 5-05.
OK	
Fuel Drain Line Restriction	Check lines and tank vents. Refer to Procedure 5-15.
OK	
Throttle Leakage Set Wrong or Wrong Idle Parts	Set to proper throttle leakage, or replace fuel pump. Refer to Procedure 5-07.

ENGINE WILL NOT REACH RATED SPEED WHEN LOADED

Cause	Corrections
Excessive Load for Engine Horsepower Rating	Reduce vehicle load or use lower gear.
OK	
Tachometer Has a Malfunction	Check with hand or digital tachometer. Refer to Procedure 5-05.
OK	
Throttle Linkage Adjustment Wrong	Check for full throttle travel. Refer to Procedure 5-07.
OK	
Install Compuchek , if Available	Perform low power test. Refer to ''Compuchek Operation Manual,'' Bulletin No. 3377550.
OK	
Fuel Suction Line Restricted	Check fuel inlet restriction. Refer to Procedure 5-15.
OK	
AFC Operation Has a Malfunction	Check air leaks. Refer to Procedure 5-12.
OK	
No Air Pressure to Road Speed Governor	Check for air supply to road speed governor.
OK	
VS Governor Not Set Correctly	Set VS governor. Refer to Procedure 5-05.
OK	

(Continued)

ENGINE WILL NOT REACH RATED SPEED WHEN LOADED (CONTINUED)

Cause	Corrections
Fuel Pump Calibration Wrong	Remove pump, check on test stand. Refer to Procedure 5-07.
OK	
Fuel Control Devices Causing Fuel Restriction	Check fuel pressure before and after the accessories installed between fuel pump and cylinder head. Refer to Procedure 5-05.

LOW POWER

Cause	Corrections
Excessive Load for Engine Horsepower Rating	Reduce vehicle load.
OK	
Low Power Due to Altitude	Derate engine above 3600 meters [12,000 feet]. Refer to Procedure 5-02.
OK	
Fuel Suction Line or Fuel Filter Restricted	Check fuel inlet restriction. Refer to Procedure 5-15.
OK	
Lubricating Oil Level Too High	Check dipstick calibration and oil pan capacity. Refer to Procedure 2-14 and Reference 2-03.
OK	
Throttle Linkage Adjustment Wrong	Check throttle linkage adjustment for full opening of throttle lever. Refer to Procedure 5-07.
OK	
Intake or Exhaust System Restricted	Check intake and exhaust systems for restrictions. Refer to Procedures 3-08 and 3-09.
OK	
Install Compuchek , if Available	Perform low power test. Refer to ‘‘Compuchek Operation Manual,’’ Bulletin No. 3377550.
OK	
† Air in Fuel - Spongy Throttle is Symptom	Check for air in fuel, tightenf uel connections, tighten filter, check tank stand pipe, check road speed governor. Refer to Procedure 5-12.
OK	

(Continued)

† If used, Compuchek has already tested for this cause.

LOW POWER (CONTINUED)

Cause	Corrections
Fuel Drain Line Restricted or Fuel Tank Vents Plugged	Check throttle response. Refer to Procedure 5-18.
OK	
Fuel Quality Poor	Verify by operating engine from a temporary tank that contains good fuel and refer to "Fuel Oil Specfications" in "NT Operation and Maintenance Manual," Bulletin No. 3810238.
OK	
High Intake Air Temperature - (Above 38°C [100°F])	Use outside air to turbocharger in warm weather. Refer to "Cold Climate Service," Bulletin No. 3379009.
OK	
Low Intake Air Temperature - (Below 0°C [32°F])	Use intake air from under hood in cold weather. Refer to "Cold Climate Service," Bulletin No. 3379009.
OK	
High Fuel Temperatures - (Above 70°C [158°F])	Fill tanks, turn off fuel heater, maximum fuel temperature 70°C [158°F]. Refer to "Fuel for Cummins Egnines," Bulletin No. 3379001.
OK	
† Air or Exhaust Leaks Between Turbocharger and Engine	Check for air or exhaust leaks. Refer to Procedure 3-10.
OK	
† AFC Plunger Not Fully Open	Check AFC air tube and drain lines for restriction or leakage. Check for hole in AFC bellows. Refer to Procedure 5-12. Replace fuel pump. Refer to Procedure 5-07.
OK	
† VS Governor Not Adjusted Correctly	Adjust VS governor. Refer to Procedure 5-05.
OK	

(Continued)

† If used, Compuchek has already tested for this cause.

LOW POWER (CONTINUED)

Cause	Corrections
Fuel Rate Low, Fuel Pressure Low, and Turbocharger Pressure Low	Raise fuel rate (pressure). Refer to Procedure 5-05.
OK	
Fuel Rate High, Fuel Pressure High, and Turbocharger Pressure High	Lower fuel rate (pressure). Refer to Procedure 5-05.
OK	
Fuel Rate OK, Fuel Pressure High, and Turbocharger Pressure OK	Remove and calibrate injectors. Refer to Procedure 5-06.
OK	
Fuel Rate Low, Fuel Pressure High, and Turbocharger Pressure OK or Low	Remove and calibrate injectors. Refer to Procedure 5-06.
OK	
Fuel Rate Low, Fuel Pressure OK, and Turbocharger Pressure High, Air Temperature (a) Between 10° and 38°C [50° and 100°F], (b) Below 10°C [50°F]	(a) Replace turbocharger. Refer to Procedure 3-13. (b) Continue operation.
OK	
Fuel Rate Low, Fuel Pressure OK, and Turbocharger Pressure Low	Remove and calibrate injectors. Refer to Procedure 5-06.
OK	
Fuel Rate OK, Fuel Pressure OK, and Turbocharger Pressure Low	Check intake air restriction or replace turbocharger. Refer to Procedures 3-08 and 3-13.
OK	
Fuel Rate OK, Fuel Pressure Low, and Turbocharger Pressure OK	Engine OK. Check external engine load. Refer to manufacturer's specifications.
OK	

(Continued)

LOW POWER (CONTINUED)

Cause	Corrections
Fuel Rate OK, Fuel Pressure High, and Turbocharger Pressure OK	Check for restrictions (valves) in fuel pressure lines. Refer to Reference 5-02.
OK	
Engine Brake Adjusted Wrong	Adjust engine brake. Refer to Procedure 7-05.
OK	
† Valves or Injectors Adjusted Wrong	Check valve and injector adjustment. Refer to Procedure 7-04.
OK	
Injectors Carboned	Remove and calibrate injectors. Refer to Procedure 5-06.
OK	
Injectors Not Seated	Tighten holddown capscrews. Refer to Procedure 5-06.
OK	
† Injector(s) Stuck	Check rocker lever, injector link action. Replace if necessary. Refer to Procedures 5-06 and 5-13.
OK	
† Fuel Pump Governor Adjusted Wrong	Calibrate fuel pump. Refer to Procedure 5-07.

† If used, Compuchek has already tested for this cause.

EXHAUST SMOKE EXCESSIVE UNDER LOAD

Cause	Corrections
Install Compuchek , If Available	Perform low power test, then cylinder performance test. Refer to ''Compuchek Operation Manual,'' Bulletin NO. 3377550.
OK	
Intake Air System Restricted	Check intake air restriction. Refer to Procedure 3-08.
OK	
Turbocharger Wheel Rubbing	Inspect turbocharger. Refer to Procedure 3-13.
OK	
Intake Air Leaks Between Turbocharger and Cylinder Head	Check for air leaks. Refer to Procedure 3-10.
OK	
* Fuel Specifications Wrong	Check fuel specifications. Refer to Reference 5-02.
OK	
* Fuel Drain Line Restricted	Inspect fuel return system for loops, crimps, clamped points. Refer to Procedure 5-15.
OK	
Injector Loose and Valve Adjusted Wrong	Adjust valves and injectors. Refer to Procedure 7-04.
OK	
Engine is Receiving too Much Fuel	Check fuel pressure and fuel rate. Replace pump. Refer to Procedure 5-05.
OK	

(Continued)

* Compuchek does **not** test for this cause.

EXHAUST SMOKE EXCESSIVE UNDER LOAD (CONTINUED)

Cause	Corrections
* Turbocharger Turbine Seal Leakage	Check turbocharger seal. Refer to Procedure 3-05.
OK	
Injector Cups Damaged	Hold down injector at idle. Observe change in smoke level. Replace injector. Refer to Procedures 5-13 and 5-06.
OK	
* Piston Rings Not Sealing (Blue Smoke)	Check pistons and rings. Refer to Procedure 7-22.

* Compuchek does **not** test for this cause.

ENGINE WILL NOT SHUT OFF

Cause	Corrections
Fuel Pump Manual Override Open	Check to make sure manual override screw is out to maximum travel. Refer to Procedure 5-10.
OK	
Fuel Pump Shutoff Valve Disc Stuck	Check opening and closing of electrics. Refer to Procedure 5-10.
OK	
Fuel Tank Vents Plugged	Remove, clean, replace. Refer to Procedure 5-15.
OK	
Fuel Drain Line Restricted	Check lines from head to tank. Refer to Procedure 5-15.
OK	
Engine Running on Fumes Drawn into Air Intake	Locate and isolate the source of fumes.
OK	
Overhead Fuel Tank Check Valve Not Opening (Normally Off-Highway Vehicles)	Valve must open at 2 kPa [0.3 psi]. Incorrectly plumbed. Refer to Reference 5-02.
OK	
Injector Check Balls Not Seating or Missing	Check injectors on tester. Refer to Procedure 5-06.

POOR DECELERATION

Cause	Corrections
Throttle Return Spring or Linkage Binding	Check for free movement and adjust if necessary. Refer to Procedure 5-08.
OK	
Fuel Drain Lines Restricted	Check for loops, restricted fittings. Refer to Procedure 5-15.
OK	
Fuel Tank Vents Plugged	Remove and clean. Replace as necessary. Refer to Procedure 5-15.
OK	
Overhead Fuel Tank Check Valve Not Opening	Valve must open at 2 kPa [0.3 psi]. Incorrectly plumbed. Refer to Reference 5-02.
OK	
Install Compuchek , If Available	Perform cylinder performance test. Refer to "Compuchek Operation Manual," Bulletin No. 3377550.
OK	
Throttle Leakage Excessive	Remove pump. Calibrate on test stand. Refer to Procedure 5-07.
OK	
Injector Check Ball Not Seating or Missing	Remove injector(s), replace. Refer to Procedure 5-06.

ENGINE SURGES UNDER LOAD AT RATED SPEED — WIDE OPEN THROTTLE

Cause	Corrections
Fuel Pump Assembled or Adjusted Wrong	Replace fuel pump. Refer to Procedure 5-07.

ENGINE SURGES AT HIGH IDLE

Cause	Corrections
Air Leak in Fuel Lines	Check for air in fuel, tighten fuel connections, tighten filter, check tank stand pipe, check road speed governor. Refer to Procedure 5-12.
OK	
Fuel Pump Assembled or Adjusted Wrong	Replace fuel pump. Refer to Procedure 5-07.

SURGE IN TOP GEAR — ROAD SPEED GOVERNOR NOT SET CORRECTLY

Cause	Corrections
Air in Fuel	Check for air in fuel, tighten fuel connections, tighten filter, check tank stand pipe, check road speed governor. Refer to Procedure 5-12.
OK	
Road Speed Too Low or Too High in Top Gear	Adjust speed screw in road speed governor. Refer to Procedure 5-05.
OK	
Fuel Pump Not Calibrated Correctly	Replace fuel pump. Refer to Procedure 5-07.

VARIABLE SPEED (VS) GOVERNOR SURGE — ENGINE UNDER LOAD

Cause	Corrections
Air in Fuel	Check for air in fuel, tighten fuel connections, tighten filter, check tank stand pipe, check road speed governor. Refer to Procedure 5-12.
OK	
Speed Settings Are Not Correct	Adjust external idle and high speed screws. Refer to Procedure 5-05.
OK	
Idle Spring Is Not Required	Check the fuel pump code. Remove VS idle spring. Refer to Procedure 5-05.
OK	
Governor Springs Are Not Correct	Check the fuel pump code. Replace the fuel pump. Refer to Procedure 5-07.

FUEL LEAKAGE AT VARIABLE SPEED (VS) GOVERNOR

Cause	Corrections
Damaged O-Ring Seals on VS Throttle Shaft	Remove VS spring pack housing cover. Replace o-ring seals. Refer to Procedure 5-09.

OK

Copper Washers on VS Speed Adjusting Screws Are Damaged or Missing	Remove the jam nuts and lock nuts, and install new copper washers. Refer to Procedure 5-09.

VARIABLE SPEED GOVERNOR SPEED IS NOT SET CORRECTLY

Cause	Corrections
Lower (Automotive) Throttle Lever Is Not Locked Wide Open	Make sure the lower lever linkage opens the throttle wide open. Refer to Procedure 5-07.
OK	
Variable Speed Governor Linkage is Not Fully Open or is Set to Idle	Adjust the throttle linkage. Refer to Procedure 5-07.
OK	
Low Speed Screw is Out of Adjustment	Loosen lock nut and adjust the rear screw. Refer to Procedure 5-05.
OK	
High Speed Screw Is Out of Adjustment	Loosen lock nut and adjust the high speed (top) screw. Refer to Procedure 5-05.
OK	
High Speed Spring Is Wrong	Remove fuel pump and change the spring. Refer to Procedure 5-07.
OK	
Lever Screw Does Not Let the Throttle Lever Plunger Move	Remove fuel pump. Refer to Procedure 5-07. Inspect the screw adjustment. Refer to Procedure 5-05.

THROTTLE RESPONSE SLOW (ENGINE DIES GOING DOWNHILL)

Cause	Corrections
Fuel Pump Governor Overspeeding	Release throttle pressure on downgrades.
OK	
Throttle Linkage Binding	Check for free movement. Adjust if necessary. Refer to Procedure 5-07.
OK	
Throttle Leakage Too Low	Remove pump. Calibrate on test stand. Refer to Procedure 5-07.
OK	
AFC or ASA Delay	Remove pump. Calibrate on test stand. Refer to Procedure 5-07.
OK	
Refer to ‘‘Low Power’’ Chart	Refer to page 83 in Section 5.

EXCESSIVE FUEL CONSUMPTION

Cause	Corrections
Operator Technique Wrong	Refer to Check List on page 85 in Section 5.
OK	
Vehicle Factors	Refer to Check List on page 86 in Section 5.
OK	
Engine or Fuel System Fault	Refer to Check List on page 87 in Section 5.

ENGINE WILL NOT CRANK OR CRANKS SLOWLY

Cause	Corrections
External or Internal Conditions Affecting Engine Crankshaft Rotation	Check engine for ease of crankshaft rotation.
OK	
Battery Connections Broken, Loose, or Corroded	Check battery connection. Refer to Procedure 6-05.
OK	
Battery Charge Low	Check electrolyte level and specific gravity. Refer to Procedure 6-04.
OK	
Starting Circuit Component Malfunctioning	Check starting circuit components. Refer to Procedure 6-06.

AMMETER/VOLTMETER INDICATES ALTERNATOR IS NOT CHARGING, OR CHARGING AT A LOW RATE

Cause	Corrections
Gauge Defective	Connect voltmeter to battery terminal to check. Refer to Procedure 6-08.
OK	
Alternator Belt Loose	Check belt tension. Refer to Procedure 6-07.
OK	
Engine Idle Speed Too Low	Check engine idle speed. Refer to Procedure 5-05.
OK	
Alternator Malfunctioning	Check alternator output. Refer to Procedure 6-08.
OK	
System Electrically ''Open'' (Blown Fuses, Broken Wires, Loose Connections, Etc.)	Check connections, fushes, and wiring. Refer to manufacturer's wiring diagrams.

EXCESSIVE CRANKCASE GASES (BLOWBY)

Cause	Corrections
Restricted Crankcase Breather Vent Tube	Check breather tube restriction. Refer to Procedure 2-12.
OK	
Turbocharger Seals Leaking	Check turbocharger seals. Refer to Procedures 3-05 and 3-06.
OK	
Air Compressor Malfunctioning	Check air compressor. Refer to Procedure 4-07.
OK	
Cylinder Head Valve Guides Excessively Worn	Replace cylinder head. Refer to Procedure 7-11.
OK	
Piston Rings Broken or Worn	Check piston rings and cylinder liners. Refer to Procedures 7-22 and 7-24.

EXCESSIVE ENGINE VIBRATION

Cause	Corrections
Engine Idle Speed Too Low	Adjust engine idle speed. Refer to Procedure 5-05.
OK	
Fan is Loose, Damaged, or Not in Balance	Check fan. Refer to Procedure 1-18.
OK	
Loose or Damaged Engine Mounts or Mounting Brackets	Check engine mounting. Refer to Procedures 7-33 and 9-04 and the equipment manufacturer's specifications.
OK	
Loose or Damaged Vibration Damper	Check vibration damper. Refer to Procedure 7-29.
OK	
Loose or Damaged Flywheel	Check flywheel. Refer to Procedure 7-39.
OK	
Damaged Driveline Components	Check driveline components. Refer to equipment manufacturer's specifications.
OK	
Install Compuchek , If Available	Perform cylinder performance test. Refer to ''Compuchek Operation Manual,'' Bulletin No. 3377550.

EXCESSIVE ENGINE NOISE *

Cause	Corrections
Fan Belt Malfunctioning (Too Tight, Loose, or Not in Alignment)	Check fan belt. Refer to Procedure 1-20.
OK	
Fan Blades Damaged	Check fan. Refer to Procedure 1-24.
OK	
Incorrect Turbocharger Installed	Check for correct turbocharger. Refer to Procedure 3-07.
OK	
Excessive Valve or Injector Clearance	Check valve and injector adjustment. Refer to Procedure 7-04.
OK	
Damaged Push Rod or Cam Follower	Check push rods and cam followers. Refer to Procedures 7-08, 7-13, and 7-15.
OK	
Excessive Gear Train Backlash or Damaged Gear Teeth	Check gear backlash and gear teeth. Refer to Procedures 7-28, 7-35, and 7-37.
OK	
Main or Connecting Rod Bearings Loose or Damaged	Refer to ''Connecting Rod or Main Bearing Noise'' Symptom Charts on pages 72 and 71, respectively.
OK	
Piston Rings Broken or Worn	Refer to ''Piston Noise'' Symptom Chart on page 73.

*__Note:__ When troubleshooting engine noise problems, make sure the engine accessories (air compressor, fan clutch, or hydraulic pump) are **not** the cause of the noise. Refer to ″General Engine Noise Diagnostic Procedures″ on page 70.

MECHANICAL VARIABLE TIMING (MVT) WILL NOT SWITCH TO ADVANCED OR RETARDED TIMING MODE

Cause	Corrections
MVT System Malfunctioning	Complete the MVT system operation check. Refer to Procedure 7-14.
OK	
Air Supply Less Than 620 kPa [90 psi]	Use a dry air supply above 620 kPa [90 psi]. Refer to Procedure 7-14.
OK	
Pressure Release Orifice Plug Restricted or Missing	Inspect the orifice plug. Refer to Procedure 7-14.
OK	
Electrical Wiring Harness Malfunctioning	Inspect the electrical wiring harness. Refer to Procedure 7-14.
OK	
MVT Pressure Switch Malfunctioning	Inspect the pressure switch. Refer to Procedure 7-14.
OK	
MVT Air Solenoid Malfunctioning	Inspect the air solenoid. Refer to Procedure 7-14.
OK	
MVT Actuator Seal Leakage	Change the actuator seal. Refer to Procedure 7-14.

White Smoke - General Information

White smoke is the result of incomplete combustion and is generally associated with engine start-up at low ambient temperatures. This condition is more predominant on high horsepower fixed injection timing engines because the fuel and combustion systems are optimized for maximum performance and for reliability and durability under high load operating conditions.

These engines can have two or three cylinders that misfire or have incomplete combustion when the engine is started at low ambient temperatures. The fuel that is injected into the cylinders that are misfiring is exhausted into the atmosphere as unburned hydrocarbons which cool, condense, and appear as white smoke. As the cylinder temperature and subsequently the coolant temperature rise, the misfiring cylinders begin to sustain combustion which decreases the hydrocarbon level in the exhaust, resulting in less white smoke being produced.

Since white smoke is a normal characteristic of high horsepower heavy-duty diesel engines during start-up at low ambient temperatures, it is extremely important to determine if the level of white smoke is significantly higher than normal for a particular engine model before making any attempt to correct a complaint. This can be accomplished by comparing the level of white smoke from one unit to another which has the same chassis configuration and engine model. If a **significant** difference in the level of white smoke between the two units is noted under the same operating conditions, refer to ″Excessive White Smoke at Idle″ Symptom Chart on page 68 for corrective action.

EXCESSIVE WHITE SMOKE AT IDLE

Cause	Corrections
MVT System (If Equipped) Not Switching to Advanced Timing Mode	Check MVT Operation. Refer to ''Mechanical Variable Timing'' Symptom Chart on page 66.
OK	
Engine Block Heater Not Operating	Check electrical source and wiring to block heater. Replace block heater as required. Refer to manufacturer's instructions.
OK	
Low Coolant Temperature	Refer to ''Coolant Temperature Below Normal'' Symptom Chart on page 6.
OK	
Fuel Quality Poor	Verify by operating engine from a temporary tank that contains good fuel. Refer to fuel oil specifications, Reference 5-02.
OK	
Raw Fuel in Intake Manifold	Check AFC air line and intake manifold for fuel. Repair as necessary.
OK	
Valve or Injector Adjusted Wrong	Check valve and injector settings. Refer to Procedure 7-04.
OK	
Injector Cups Damaged or Cracked	Hold down injector at idle. Observe change in smoke level. Replace injector. Refer to Procedures 5-13 and 5-06.
OK	

(Continued)

EXCESSIVE WHITE SMOKE AT IDLE (CONTINUED)

Cause	Corrections
Incorrect Injectors or Injector Cups Installed	Check for correct parts in engine. Refer to the Control Parts List.
OK	
Injection Timing Set Wrong	Check injection timing. Refer to Pocedures 7-17 and 7-18.

General Engine Noise Diagnostic Procedures

NOTE: When diagnosing engine noise problems, make sure that noises caused by accessories, such as the air compressor and power take-off, are **not** mistaken for engine noises. Remove the accessory drive belts to eliminate noise caused by these units. Noise will also travel to other metal parts **not** involved in the problem. The use of a stethoscope can help locate an engine noise.

Engine noises heard at the crankshaft speed (engine RPM) are noises related to the crankshaft, rods, pistons, and piston pins. Noises heard at the camshaft speed (one-half of the engine RPM) are related to the valve train. A hand-held digital tachometer can help to determine if the noise is related to components operating at the crankshaft or camshaft speed.

Engine noise can sometimes be isolated by holding down the injector plungers one at a time (refer to Procedure 5-13). If the volume of the noise decreases or the noise disappears, it is related to that particular engine cylinder.

There is **not** a definite rule or test that will positively determine the source of a noise complaint.

Engine driven components and accessories, such as gear-driven fan clutches, hydraulic pumps, belt-driven alternators, air-conditioning compressors, and turbochargers can contribute to engine noise. Use the following information as a guide to diagnosing engine noise:

Main Bearing Noise (Refer to Troubleshooting Chart on Page 71)

The noise caused by a loose main bearing is a loud, dull knock heard when the engine is pulling a load. If all main bearings are loose, a loud clatter will be heard. The knock is heard regularly every other revolution. The noise is the loudest when the engine is ″lugging″ or under heavy load. The knock is duller than a connecting rod noise. Low oil pressure can also accompany this condition.

If the bearing is **not** loose enough to produce a knock by itself, the bearing can knock if the oil is too thin or if there is no oil at the bearing.

An irregular noise can indicate worn crankshaft thrust bearings.

An intermittent sharp knock indicates excessive crankshaft end clearance. Repeated clutch disengagements can cause a change in the noise.

Connecting Rod Bearing Noise (Refer to Troubleshooting Chart on Page 72)

Connecting rods with excessive clearance knock at all engine speeds and under both idle and load conditions. When the bearings begin to become loose, the noise can be confused with piston slap or loose piston pins. The noise increases in volume with engine speed. Low oil pressure can also accompany this condition.

Piston Noise (Refer to Troubleshooting Chart on Page 73)

It is difficult to tell the difference between piston pin, connecting rod, and piston noise. A loose piston pin causes a loud double knock which is usually heard when the engine is idling. When the injector to this cylinder is held down, a noticeable change will be heard in the sound of the knocking noise. However, on some engines, the knock becomes more noticeable when the vehicle is operated on the road at a steady speed condition.

MAIN BEARING NOISE

Cause	Corrections
Insufficient Oil Supply or Low Oil Pressure	Check oil level. Refer to Procedure 2-10. Refer to "Lubricating Oil Pressure Low" Symptom Chart on page 13.
OK	
Thin or Diluted Lubricating Oil	Refer to "Oil Specifications" in "NT Operation and Maintenance Manual," Bulletin No. 3810238. Refer to "Coolatn and Fuel in The Lubricating Oil" Symptom Charts on pages 21 and 22, respectively.
OK	
Loose Flywheel or Torque Converter	Check flywheel mounting capscrews. Refer to Procedure 7-39. Refer to equipment manufacturer's specifications for torque converter inspection.
OK	
Main Bearing Capscrews Loose, Worn, or Not Tightened Correctly	Inspect main bearing caps and capscrews. Refer to Procedure 7-20.
OK	
Main Bearings Damaged, Worn, or Wrong Bearings Installed	Inspect main bearings. Refer to Procedure 7-20. Inspect the crankshaft journals. Refer to "NT Engine Shop Manual," Bulletin No. 3379076.
OK	
Crankshaft Journals Damaged or Out-of-Round	Inspect the crankshaft journals. Refer to "NT Engine Shop Manual," Bulletin No. 3379076.

CONNECTING ROD BEARING NOISE

Cause	Corrections
Insufficient Oil Supply or Low Oil Pressure	Check oil level. Refer to Procedure 2-10. Refer to "Lubricating Oil Pressure Low" Symptom Chart on page 13.
OK	
Thin or Diluted Lubricating Oil	Refer to "Oil Specifications" in "NT Operation and Maintenance Manual," Bulletin No. 3810238. Refer to "Coolant and Fuel in the Lubricating Oil" Symptom Charts on pages 21 and 22, respectively.
OK	
Connecting Rod Capscrews Loose or Not Tightened Correctly	Inspect the connecting rod capscrews. Refer to Procedure 7-21.
OK	
Connecting Rod Bearings Not Assembled Correctly, Damaged, Worn, or Wrong Bearings Installed	Inspect the connecting rod bearings. Refer to Procedure 7-21.
OK	
Connecting Rods Bent or Out-of-Alignment	Remove connecting rods. Refer to Procedure 7-23. Inspect connecting rods. Refer to "NT Engine Shop Manual," Bulletin No. 3379076.
OK	
Crankshaft Journals Damaged or Out-of-Round	Inspect the crankshaft journals. Refer to "NT Engine Shop Manual, Bulletin No. 3379076.

PISTON NOISE

Cause	Corrections
Contaminated or Poor Quality Fuel	Verify by operating the engine from a temporary tank containing good fuel. Refer to ''Fuel Oil Specifications'' in ''NT Operation and Maintenance Manual,'' Bulletin No. 3810238.
OK	
Carbon Deposits on the Top of the Piston Contacting the Cylinder Head	Remove the cylinder head and remove carbon from the pistons. Refer to Procedure 7-11. Inspect the piston rings for damage or wear. Refer to Procedure 7-22.
OK	
Piston Pin or Bushing Loose, Worn, or Not Installed Correctly*	Remove pistons and inspect the piston pin and bushing for damage, wear, and correct installation. Refer to Procedure 7-22.
OK	
Piston Cracked or Broken	Remove and inspect pistons for cracks or damage. Refer to Procedure 7-22.
OK	
Connecting Rod(s) Bent or Out-of-Alignment	Remove the connecting rod(s). Refer to Procedure 7-23. Refer to ''NT Engine Shop Manual,'' bulletin no. 3379076, for inspection procedures.
OK	
Piston Rings Worn or Broken	Remove and inspect the piston rings. Refer to Procedure 7-22.
OK	
Cylinder Liners Worn or Out-of-Round	Remove pistons. Refer to Procedure 7-22. Inspect the cylinder liners. Refer to Procedure 7-24.

*Incorrect fit of the piston pin. Listen for a light ticking or tapping noise which is more noticeable with no load on the engine. The noise can disappear completely when the engine is pulling a load. Piston pin noise can normally be noticed during deceleration of the engine.

NOTES

Section 1 - Cooling System

Section Contents

	Reference No.	Page
Service Tools	1-00	3
General Information	1-01	4
Specifications	1-02	8
Flow Charts	1-03	13
Venting	1-04	16

System Troubleshooting and Repair List

	Procedure No.	Page
Aftercooler Filter Screen (Big Cam IV Only) - Clean	1-42	84
Coolant Filter - Replace	1-08	21
Coolant Temperature Gauge - Check	1-14	34
Cooling System, Clean	1-10	24
Cooling System, Drain	1-06	18
Cooling System, Fill	1-07	19
Cooling System, Maintenance	1-05	17
Cooling System, Pressure Test	1-12	32
Cooling System, Test For Air Or Combustion Gases	1-11	26
Diesel Coolant Additives (DCA4)	1-09	22
Fan Clutch, Air Engaged Type	1-22	45
Fan Clutch, Air Disengaged Type	1-23	45
Fan Clutch, On-Off Type - Check	1-21	43
Fan Clutch, On-Off Type - Replace	1-24	46
Fan Clutch, Viscous Type	1-25	48
Fan Drive Belts - Replace	1-20	41
Fan Hub - Replace	1-26	52
Fan, Shroud, Spacer and Pulley - Inspect	1-18	37
Head Gasket, Cylinder Liner, Crevice Seal or Cylinder Block - Inspect for Coolant Leaks	1-48	91
Hoses - Check	1-13	33
Idler Pulley Assembly, Water Pump - Replace	1-27	54
Manifold, Water, Sealing Ring Balance Orifices (Big Cam IV Only) - Replace	1-43	85
Radiator Check Valve Leakage (Big Cam IV Only) - Check	1-41	82
Radiator Baffle Leakage (Big Cam IV Only) - Check	1-44	89
Radiator (Horizontal-Flow) - Check	1-46	90
Radiator (Three-Pass, Vertical-Flow) - Check	1-47	90
Radiator (Two-Pass, Vertical-Flow) - Check	1-45	89
Radiator Fins - Inspect	1-16	35
Radiator Pressure Cap - Check	1-15	34
Shutter Operation - Check	1-17	35

System Troubleshooting and Repair List (Continued)

	Procedure No.	Page
Thermostat, (Big Cam III) - Replace	1-30	60
Thermostats, (Big Cam IV) - Replace	1-36	71
Thermostat, Seal (Big Cam III) - Replace	1-32	63
Thermostat, (Big Cam III) - Test ″Thermostat in Chassis″	1-29	59
Thermostat, (Big Cam III) - Test ″Thermostat Removed″	1-31	62
Thermostat, Bypass (Big Cam IV) - Check	1-34	65
Thermostat Seat, Bypass (Big Cam IV) - Replace	1-37	73
Thermostat, Radiator (Big Cam IV) - Check	1-33	64
Thermostat Seat, Radiator (Big Cam IV) - Replace	1-38	75
Thermostat Housing (Big Cam IV) - Replace	1-35	68
Thermostat Housing Check Valve Assembly (Big Cam IV) - Replace	1-40	78
Thermostat Housing Check Valve O-rings (Big Cam IV) - Replace	1-39	76
Water Pump - Replace	1-28	55
Water Pump Belt - Replace	1-19	38

Required Service Tools - (1-00)

Cooling System

Procedure No.	Part No.	Description
1-09	3300846S	DCA4 Coolant Test Kit
	(Fleetguard)	
	3375208	
	(Cummins)	
1-19	ST-1293	Belt Tension Gauge
1-20	ST-1138	Belt Tension Gauge
	ST-1274	Belt Tension Gauge
1-25	3377462	Optical Tachometer
	3377464	Reflective Tape (in optical tachometer, Part No. 3377462)
1-32	ST-1225	Thermostat Seal Mandrel
1-35	3377144	Internal Pipe Wrench
	3377387	Internal Pipe Wrench
1-38	3377291	Thermostat Seat Driver
1-40	3377414	Check Valve Driver

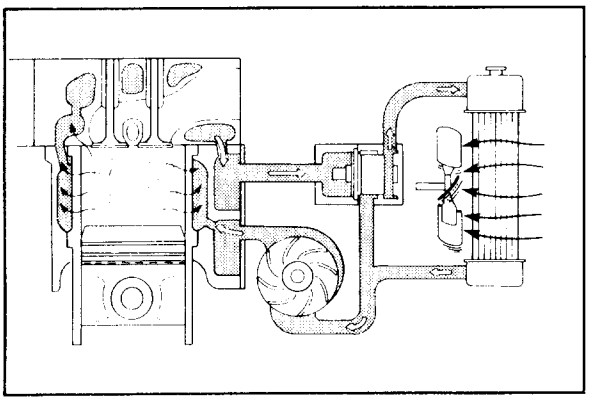

General Information - (1-01)

The primary function of the cooling system is to remove the heat created by the engine and its support components. The excess heat energy that is **not** removed by the cooling system is carried away by exhaust gases and radiation into the atmosphere.

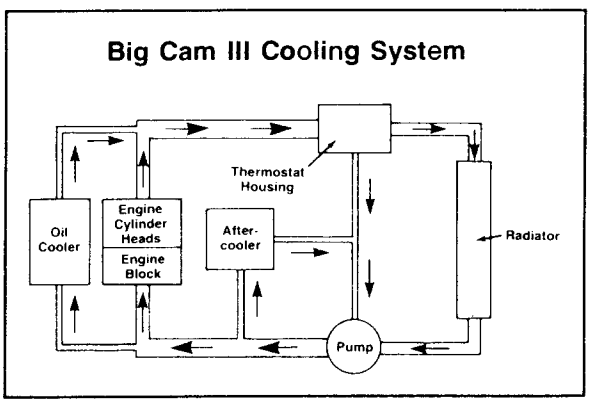

The accompanying charts illustrate the coolant flow through the engine. For more detail, refer to the Coolant Flow Charts in Reference 1-03.

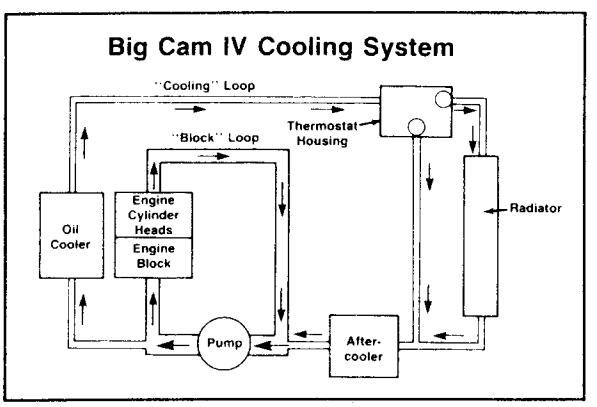

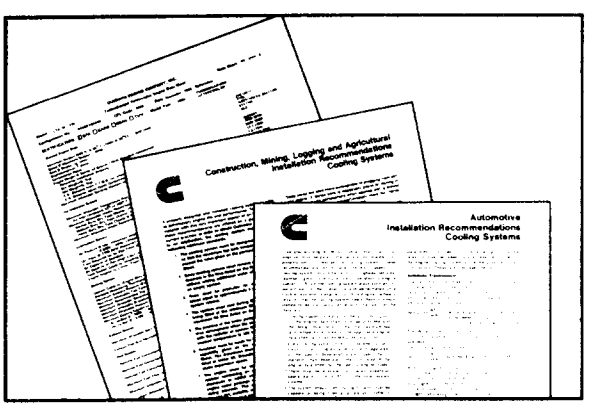

The following publications, available through Cummins Distributors or Cummins Dealers, provide cooling system installation recommendations and specifications approved by Cummins Engine Company, Inc:

- Automotive Installation Recommendations (Cooling System), Bulletin No. 3382413.
- Construction, Mining, Logging, and Agriculture Installation Recommendations (Cooling System), Bulletin No. 3382171.
- Data Sheets for specific engine models.
- Operation of Diesel Engines in Cold Climates, Bulletin No. 3379009.

Traditional Aftercooled Engines (Big Cam III) and Optimized Aftercooled Design Engines (Big Cam IV)

Information on traditional aftercooled and Optimized Aftercooled engines is included in this Cooling System Section.

It is important to determine which engine design you are working with prior to troubleshooting any cooling system complaints. The coolant flow, system operation, and troubleshooting procedures differ significantly between the two engine designs. The Optimized Aftercooled engines (Big Cam IV) can be identified by the small size of the radiator hose (one-inch inside diameter) and the integral thermostat housing and coolant filter head assembly.

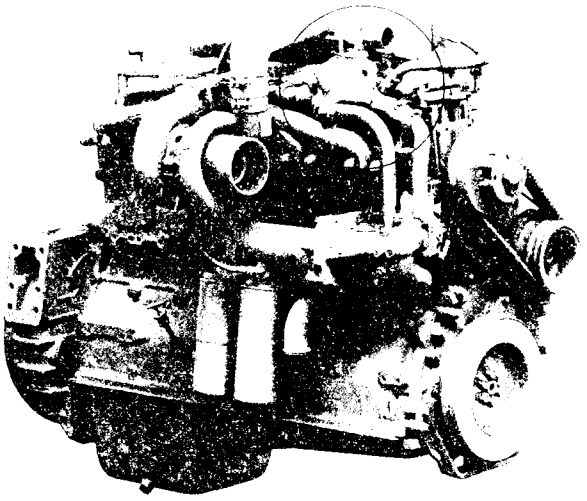

Traditional Aftercooled Engine

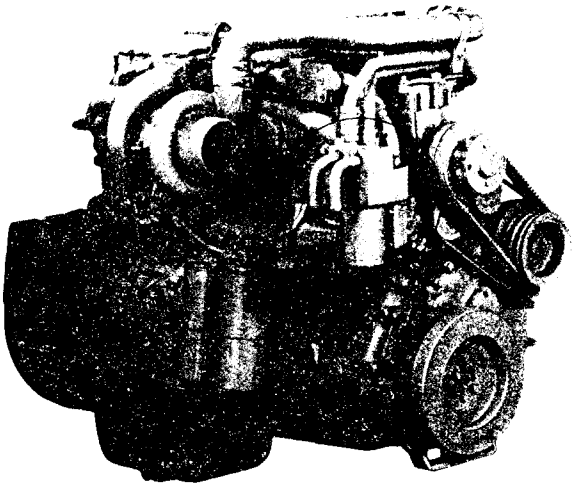

Optimized Aftercooled Engine (Big Cam IV)

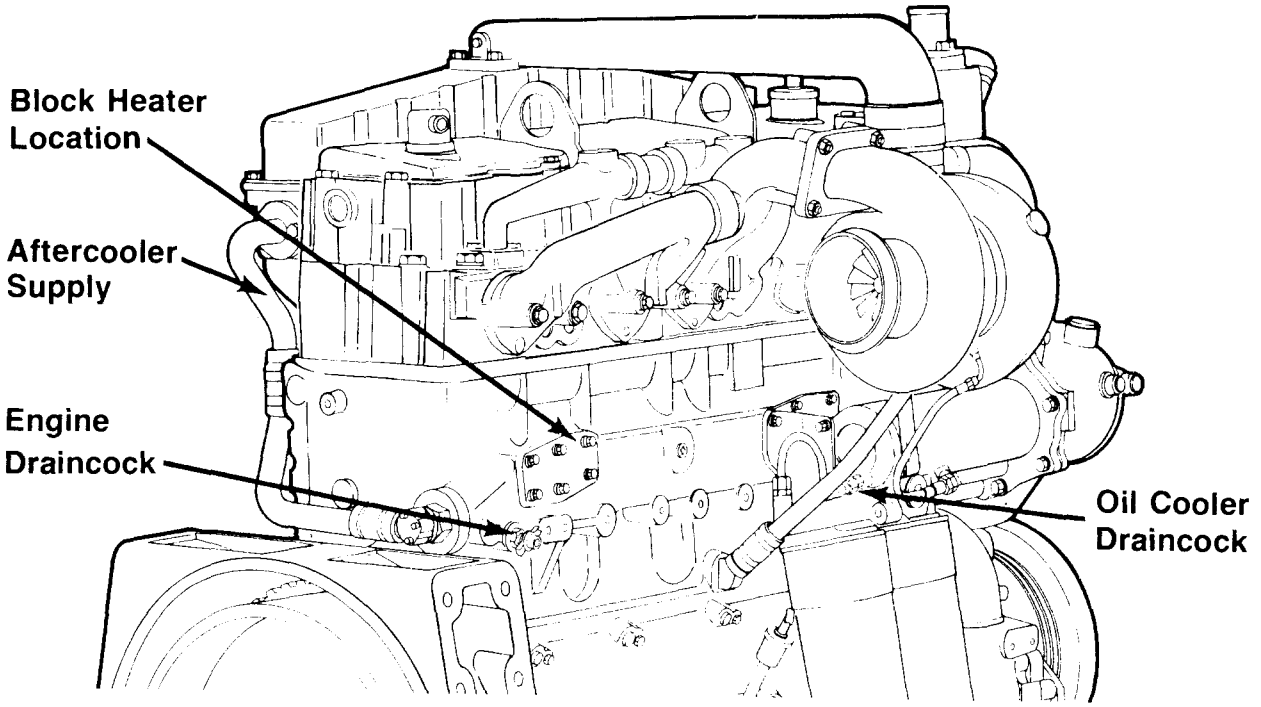

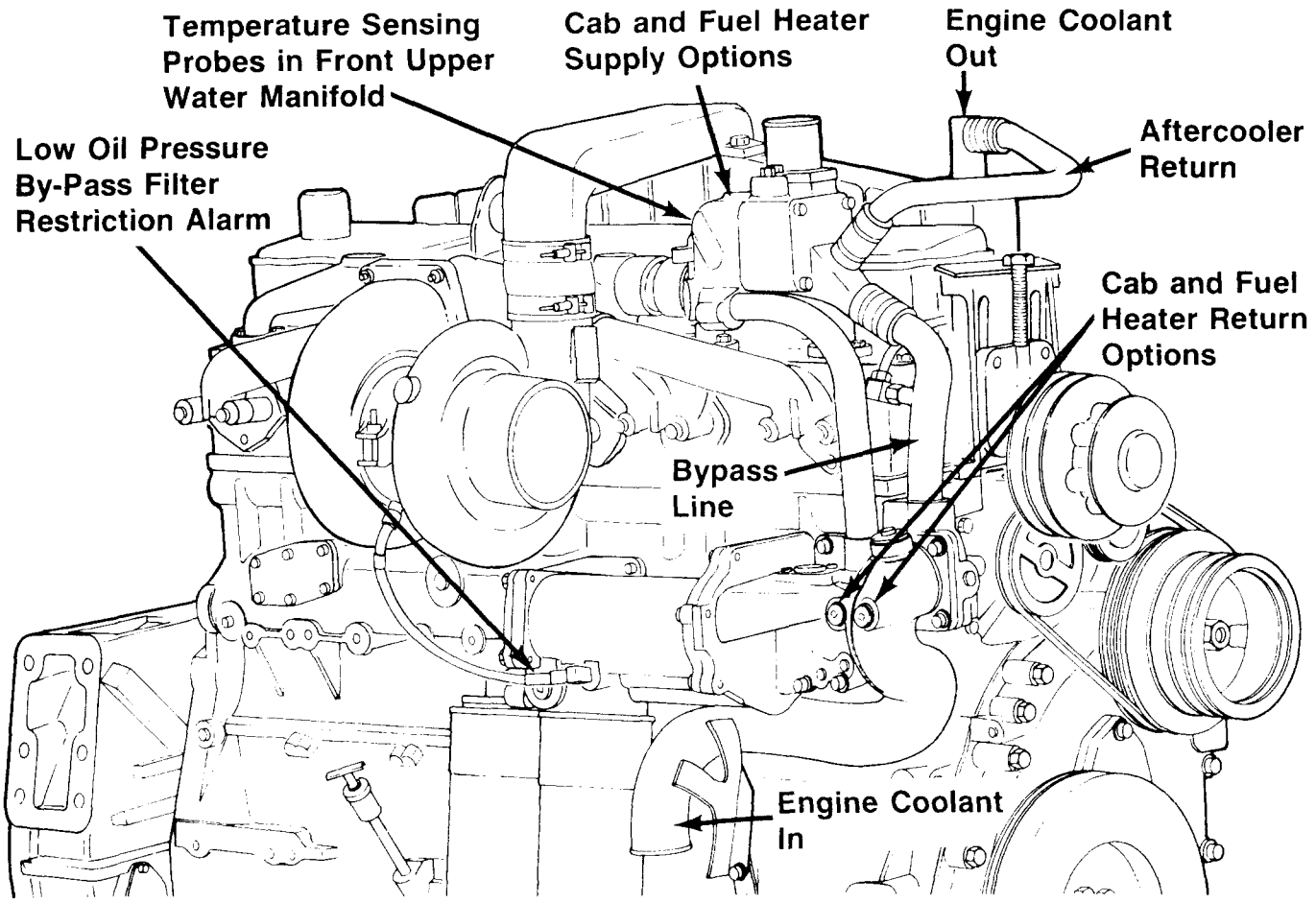

Traditional Aftercooled Engine

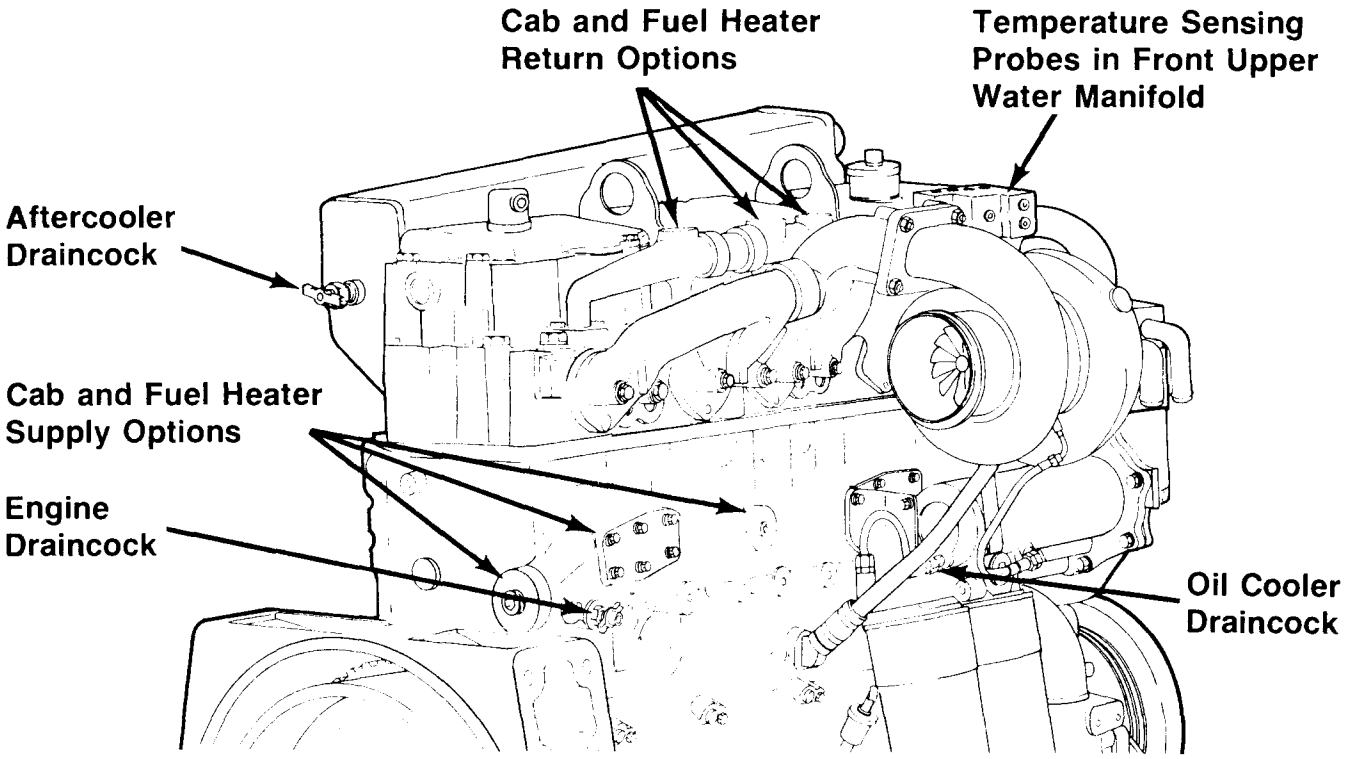

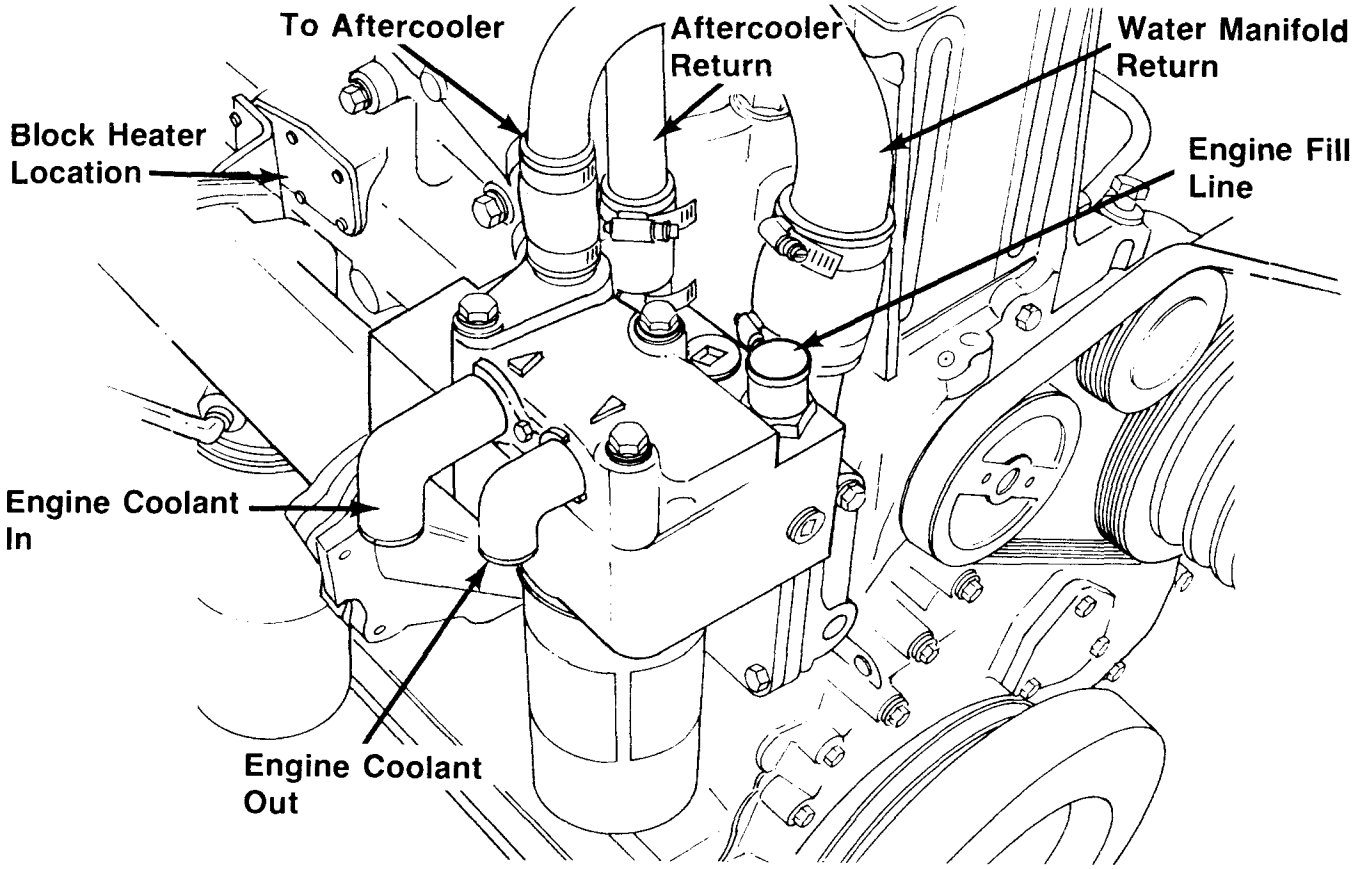

Optimized Aftercooled Engine (Big Cam IV)

Cooling System Specifications - (1-02)

	Big Cam III - Traditional	Big Cam IV - Optimized
Coolant Capacity (Engine Only)	21.0 litres [22.0 U.S. Qt.]	21.0 litres [22.0 U.S. Qt.]
Standard Modulating Thermostat-Range	82-93°C [180-200°F]	79.4-90.5°C [175-195°F]
Maximum Coolant Pressure (Exclusive of Pressure Cap) Closed Thermostat	276kPa [40 psi]	276kPa [40 psi]
Maximum Allowable Top Tank Temperature	100°C [212°F]	100°C [212°F]
Minimum Recommended Top Tank Temperature	70°C [158°F]	70°C [158°F]
Maximum Allowable Deaeration Time	25 minutes	35 minutes
Minimum Allowable Drawdown or 20% of System Capacity (Whichever is Greater)	10.4 litres [11 U.S. Qt.]	11.5 litres [12 U.S. Qt.]
Minimum Allowable Pressure Cap	50kPa [7 psi]	50kPa [7 psi]
Maximum Allowable Coolant Flow to Accessories	—	1.3 litres/sec [20 U.S. Gal/Min]
Minimum Cooling Capability @ Nominal Fuel Rate		
• Air to Boil @ 1500 RPM @ 25 Km/h [15 MPH] Ram Air	40°C [104°F]	—
• Air to Boil @ 2100 RPM @ 25 Km/h [15 MPH] Ram Air	45°C [113°F]	—
Maximum Cooling Differential @ Nominal Fuel Rate @ 25 Km/h [15 MPH] Ram Air and 50/50 Ethylene Glycol Coolant		
• Engine Out Coolant to Ambient @ 1900 RPM	—	41.1°C [106°F]
• Engine Out Coolant to Ambient @ 1300 RPM	—	46.0°C [115°F]
• Engine Inlet Coolant to Ambient @ 1900 RPM & 1300 RPM	—	5.6°C [42°F]

Fleetguard® Products For Cummins Engines (A)

	Fleetguard® Part No.	Cummins Part No.	DCA4 Units
Table 1:	**DCA4 Spin-on Coolant Filters**		
	WF-2070	3318157	2
	WF-2071	3315116	4
	WF-2072	3318201	6
	WF-2073	3315115	8
	WF-2074	3316053	12
	WF-2075	3318318	15
	WF-2076	3318319	23
Table 2:	**DCA4 Liquid**		
	DCA60L	3315459	4 (1 pint)
	DCA80L	3317428	1760 (55 gallons)
Table 3:	**DCA4 Powder**		
	DCA95	3318320	20
Table 4:	**RESTORE Heavy-Duty Cooling System Cleaner**		
	CC2610	None	1 gallon
	CC2611	None	5 gallons
	CC2612	None	55 gallons

(A) Recommended for use with all Cummins engines.

DCA4 Maintenance Guide

System Capacity (A)		Precharge Filter (B)	Service Filter (C)
Litres	Gallons		
19-26	5-7	WF-2072	WF-2070
30-38	8-10	WF-2073	WF-2071
42-57	11-15	WF-2074	WF-2071
61-76	16-20	WF-2075	WF-2071
80-114	21-30	WF-2076	WF-2072
118-190	31-50	(D)	WF-2073
194-380	51-100	(D)	WF-2075 (E)
384-570	101-150	(D)	WF-2076 (F)

Notes:

a. Consult the vehicle equipment manufacturer's maintenance information for total cooling system capacity.

b. After draining and replacing the coolant, **always** precharge the cooling system to maintain the DCA4 concentration between 1 and 2 units per gallon.

NOTE: When performing service which requires draining the cooling system, discard the coolant. Reusing coolant can introduce contaminates or overconcentrated chemicals, resulting in premature failure of cooling system components.

c. Change coolant filters at regular intervals to protect the cooling system. Service filters listed above are satisfactory for use with maintenance intervals from 16,000 to 40,000 km [10,000 to 25,000 miles] or 250 to 600 hours.

d. To precharge cooling systems larger than 114 litres [30 U.S. gallons], do the following:

1. Install appropriate service filter(s) listed in the above table based on total cooling system capacity.
2. Subtract the total DCA4 units contained in the service filter(s) from the total cooling system capacity in gallons.

   Example: 95 gallon cooling system capacity
   -15 units (1) WF-2075 filter
   80 units

3. The answer represents the additional units required to precharge the cooling system. Four bottles of Part No. 3318320 DCA4 powder will provide a sufficient amount of DCA4 units (80) to precharge the cooling system.
4. Install the appropriate service filter at the next and subsequent maintenance intervals.

e. Or (2) WF-2073 or (4) WF-2071.

f. Or (2) WF-2074 or (4) WF-2072.

g. Frequent coolant testing is unnecessary if recommended precharge and service procedures are followed. Use Fleetguard® Test Kit 3300846S to check the coolant additive concentration when DCA4 is used. Refer to the instructions on page 11.

Instructions For Using Test Kit Part No. 3300846S To Test For DCA4

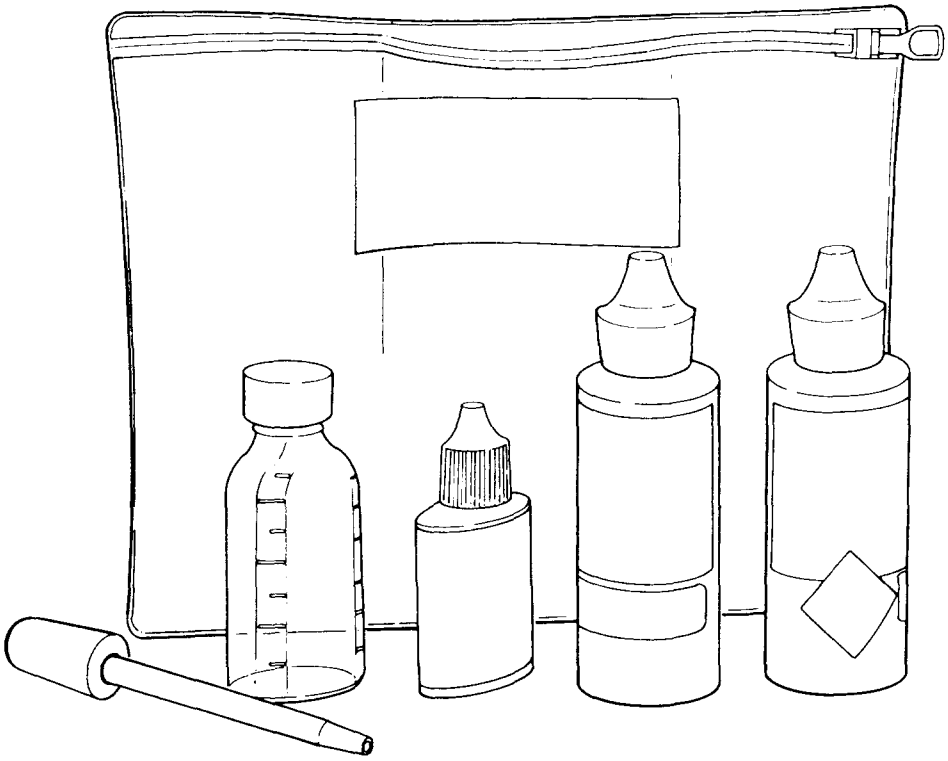

1. Fill the dropper pipet to the 1.0 ml. mark with coolant to be tested.
2. Dispense the 1.0 ml. coolant sample from the dropper pipet into the empty vial.
3. Repeat steps 1 and 2 two more times so that the vial contains 3.0 ml. of the coolant sample.
4. Add tap water to the vial up to the 10.0 ml. mark. Replace the vial cap and shake.
5. Add 2 or 3 drops of red Solution B to the vial and swirl to mix.
6. Add 1 drop of orange Solution A to the vial and swirl to mix. Continue this procedure of adding one drop of Solution A and swirling until the vial solution changes color from red through brown to gray or blue.
7. Record the number of drops of Solution A required to cause the color change, and refer to the table on page 12 for the maintenance required. If additional additive is required, use DCA4.

Notes:

1. The above instructions are only for use with cooling systems using DCA4. Follow the original test kit instructions for cooling systems using DCA.
2. Incorrect results will be obtained if the test kit is used to check cooling systems containing a mixture of DCA4 and any other supplemental coolant additive. If it is necessary to test coolant containing a mixture of DCA4 and any other supplemental coolant additive, contact Analysts, Inc. (213) 541-5611 for the location of the nearest Analysts laboratory.
3. Frequent coolant testing is unnecessary if recommended precharge and service procedures are followed.

Maintain a nominal of one DCA4 unit per gallon of coolant in your system. Less than 0.5 (1/2) unit per gallon indicates an **Under**concentrated coolant solution. More than two units per gallon indicates an **Over**concentrated coolant solution.

Number of Drops of Solution A Necessary to Cause Color Change	Coolant Conditions	Maintenance Required
0-10 Drops	**DANGEROUS** (less than 0.4 DCA4 units per gallon)	Initially charge the system to a minimum of one DCA4 unit per gallon of coolant.
11-16 Drops	**BORDERLINE** (0.45 to 0.8 DCA4 units per gallon)	Add DCA4 liquid units to maintain one unit per gallon minimum or change the DCA4 filter.
17-25 Drops	**ACCEPTABLE** (.85 to 1.3 DCA4 units per gallon)	None.
26-35 Drops	**HIGH ACCEPTABLE** (1.35 to 2.0 DCA4 units per gallon)	None.
36-55 Drops	**OVERCONCENTRATED** (2.1 to 3.3 DCA4 units per gallon)	Review maintenance practice.
Over 55 Drops	**DANGEROUSLY OVERCONCENTRATED**	Drain 50% of the coolant and replace with water/antifreeze. Retest for correct DCA4 unit concentration.

Cooling System Flow Charts - (1-03)

Big Cam III Coolant Flow (Cooling Loop)

1. Water Pump
2. Oil Cooler
3. Water Manifold
4. Aftercooler Inlet
5. Aftercooler Outlet
6. Thermostat
7. Bypass
8. To Radiator
9. Water Pump Inlet

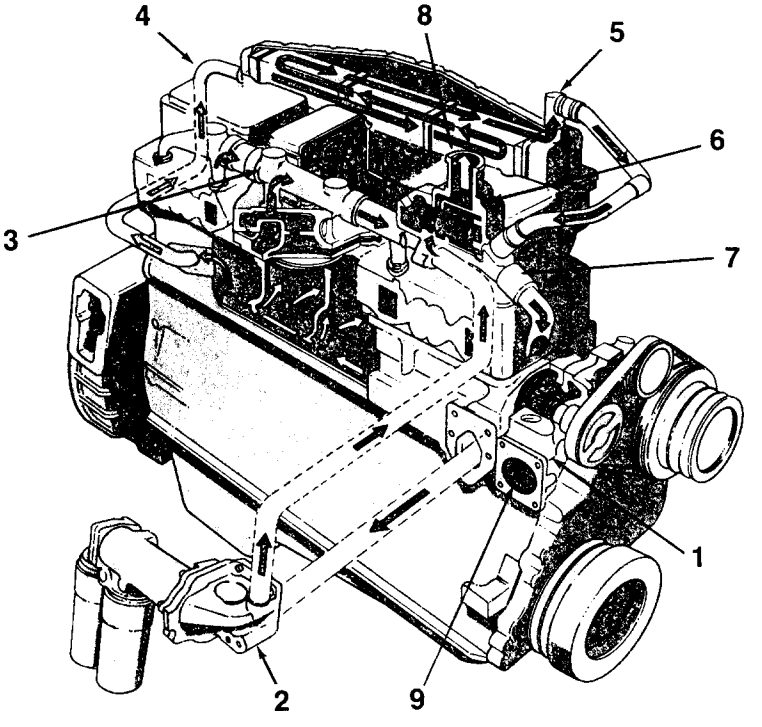

Cooling System Flow Charts - (1-03)

Big Cam IV Coolant Flow (Block Loop)

1. Block Water Manifold
2. Liner Cavity
3. Upper Water Manifold
4. Cylinder Liner
5. Water Manifold Return
6. Water Pump

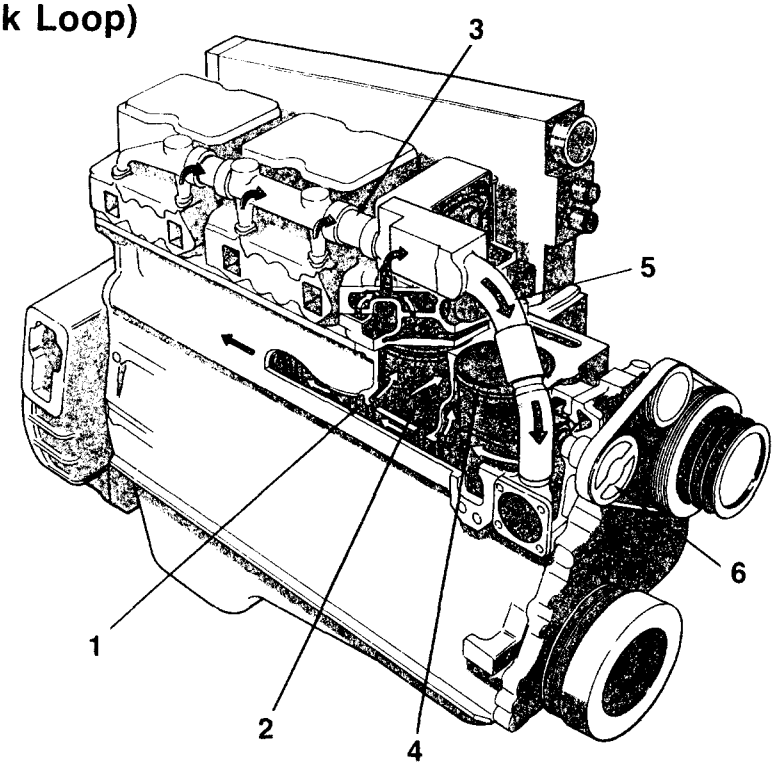

Cooling System Flow Charts - (1-03)

Big Cam IV Coolant Flow (Cooling Loop)

1. Water Pump Outlet
2. Oil Cooler
3. Bypass Thermostat
4. Radiator Thermostat
5. Engine Water Outlet
6. Engine Water Inlet
7. Aftercooler Inlet
8. Aftercooler Outlet
9. Water Pump Inlet

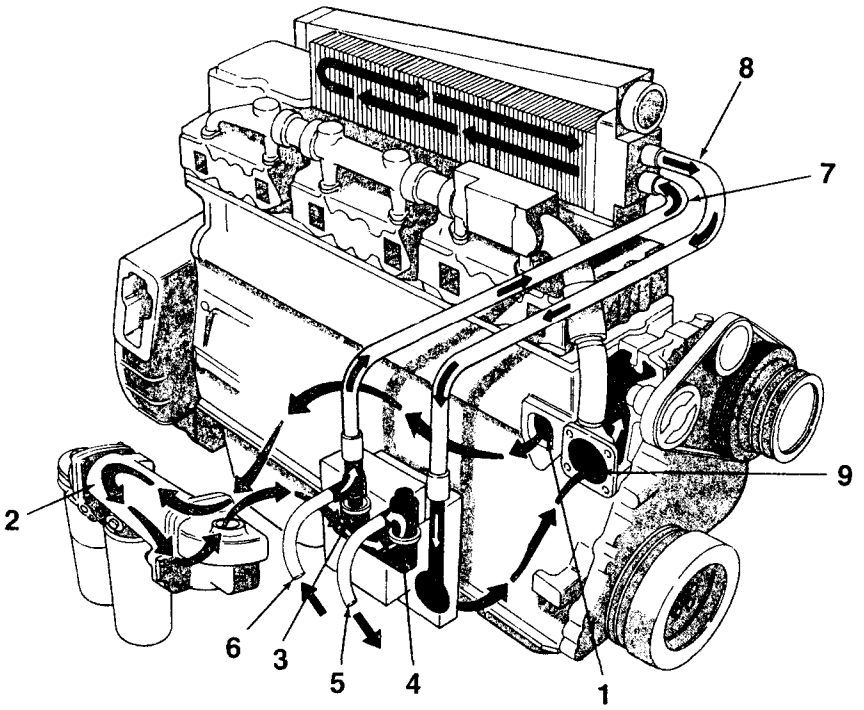

Cooling System Venting - (1-04)

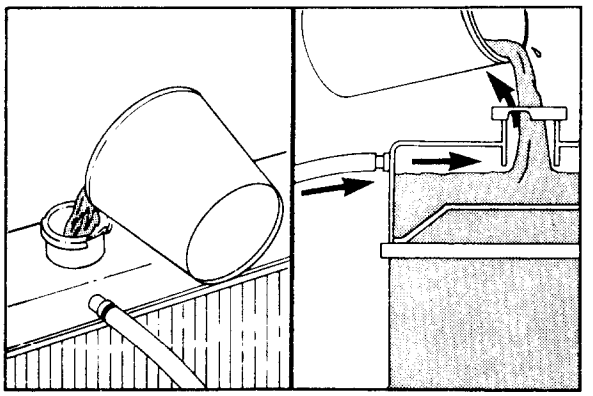

The cooling system **must** be designed to allow air to escape while filling the coolant system.

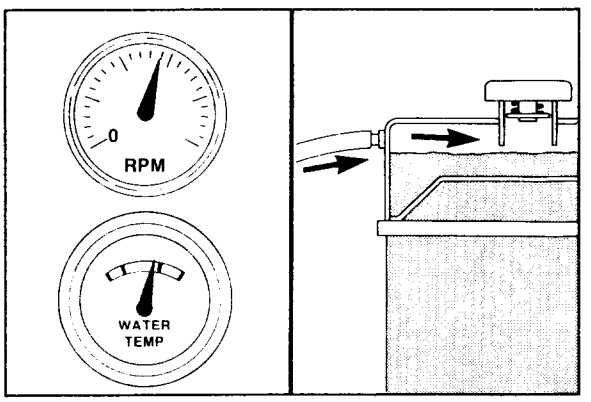

During engine operation, coolant will continuously flow through the engine vent line to remove air from the coolant.

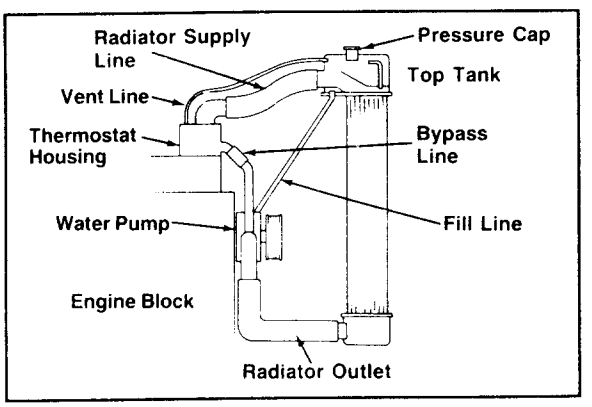

The cooling system vent line on traditional engines is plumbed from a 1/8-inch pipe tapped hole in the front water manifold to the radiator fill tank or auxiliary tank above the coolant level.

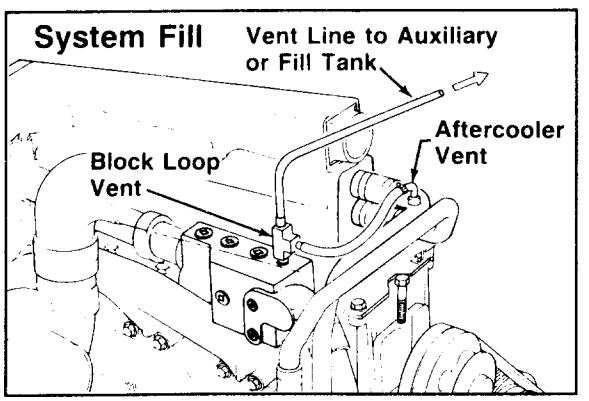

The cooling system vent line on Optimized Aftercooled engines is plumbed from a special connection located on the top of the front water manifold. The line then goes to the radiator fill tank or auxiliary tank above the coolant level.

Cooling System, Maintenance - (1-05)

Water

Always use good quality soft water in the coolant mixture. Water added to the cooling system **must** meet the specifications given in the accompanying Chart.

Mineral	Problem Cause	Limit
Calcium Magnesium (hardness)	Deposits on Liners/Heads/ Coolers	300 PPM
Chloride	General Corrosion	100 PPM
Sulfate	General Corrosion	100 PPM

Antifreeze

Caution: Antifreeze overconcentration reduces freeze protection. Do not use more than 68 percent antifreeze or overheating may result. A mixture of 50 percent antifreeze and 50 percent water is sufficient for freeze protection to -37°C [-34°F].

Use ethylene glycol antifreeze year-round to provide freeze point and boil-over protection.

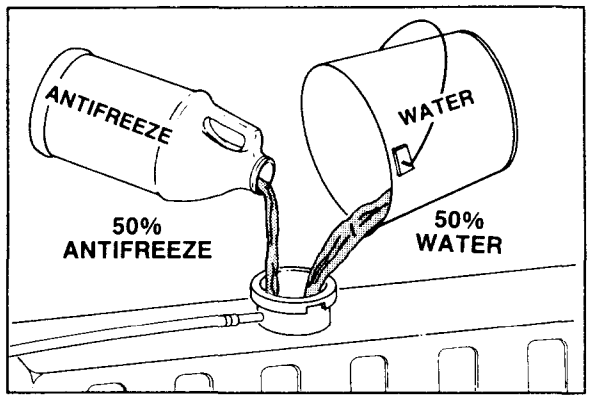

Sealing Additives

Do **not** use sealing additives in the cooling systems. Using sealing additives will cause the following problems:

- Buildup in coolant low flow areas.
- Clogged coolant filters.
- Plugged radiator.

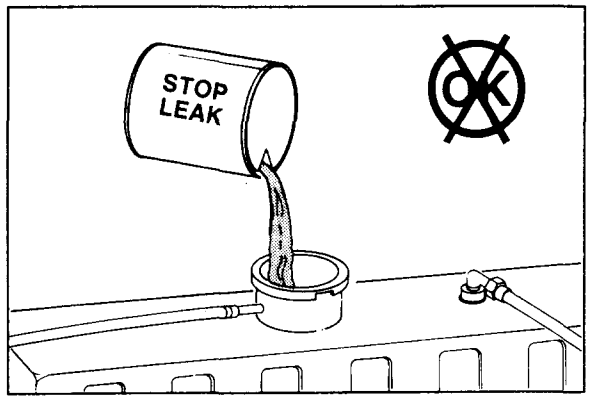

Soluble Oils

Do **not** use soluble oils in the cooling systems. The use of soluble oils will:

- allow cylinder liner pitting,
- corrode brass and copper,
- damage heat transfer surfaces, and
- damage seals and hoses.

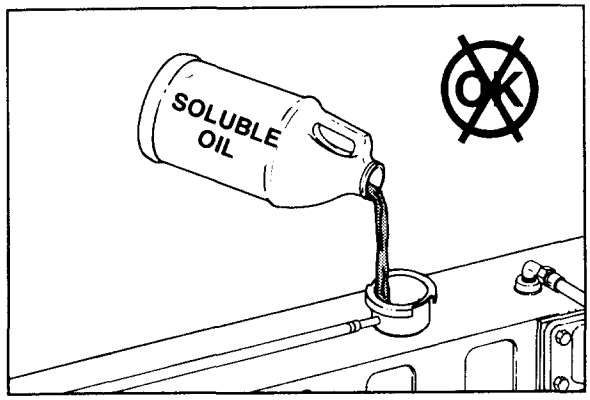

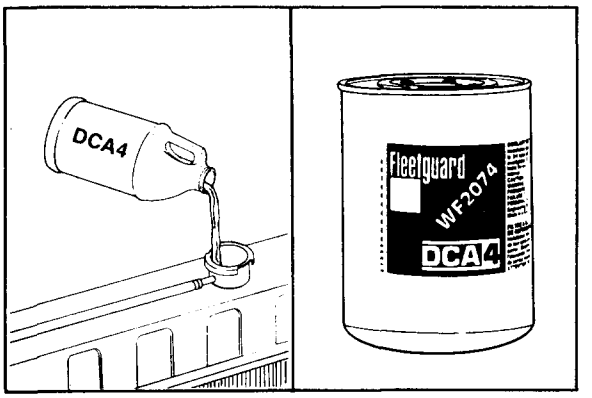

Coolant Additives and Filters

Diesel Coolant Additives (DCA4) (or equivalent) are required to protect the cooling system from fouling, solder blooming, and general corrosion. The coolant filter is required to protect the coolant system from abrasive materials, debris, and precipitated coolant additives.

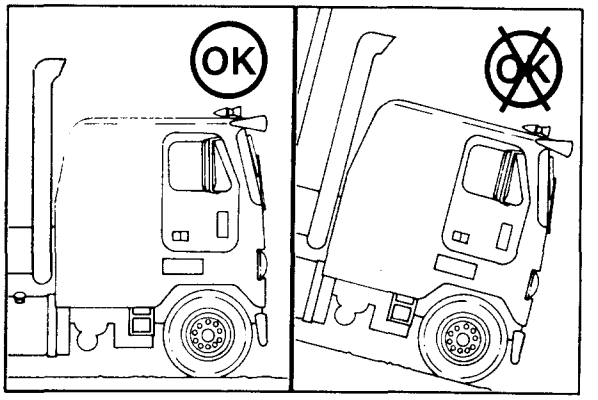

Cooling System, Drain - (1-06)

1. Position the vehicle on level ground.

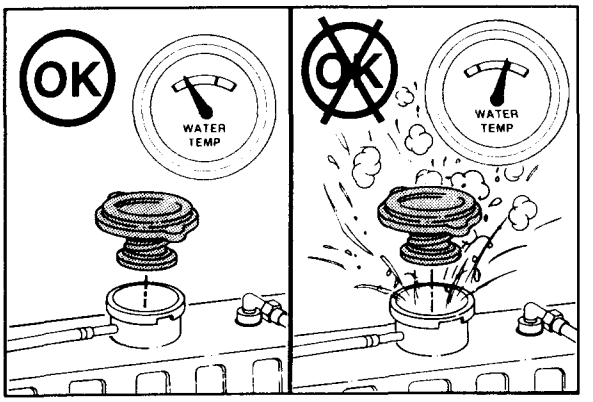

Warning: Wait until the temperature is below 50°C [120°F] before removing the coolant system pressure cap. Failure to do so can cause personal injury from heated coolant spray.

2. Remove the radiator cap after the engine is cool.

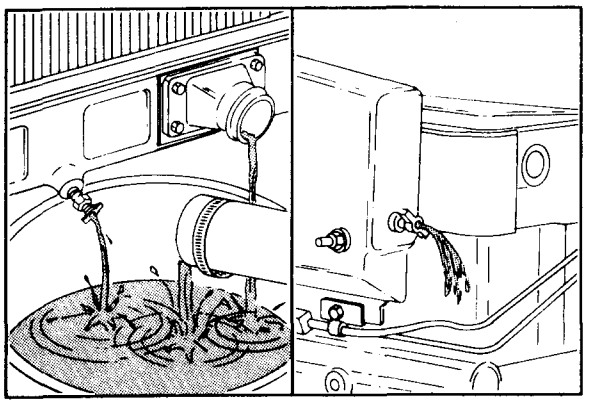

3. Drain the cooling system as follows:

- Open the radiator draincock.
- Remove the lower radiator hose(s).
- Open the aftercooler draincock (Big Cam IV only).

- Open the engine draincock.
- Open the oil cooler draincock.

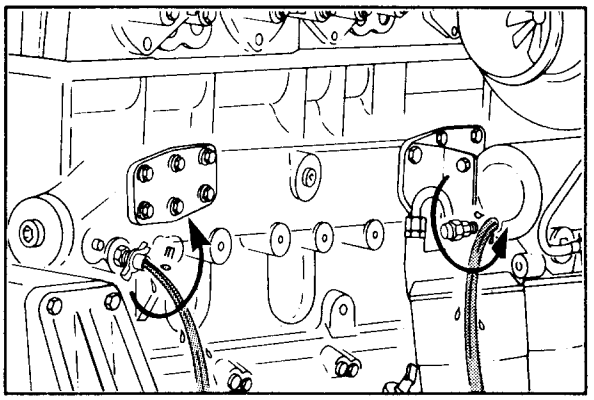

Cooling System, Fill - (1-07)

1. Close the radiator draincock.
2. Install the lower radiator hose(s).
3. Tighten the hose clamps to 5 N•m [40 in-lbs] torque.
4. Close the aftercooler draincock (Big Cam IV only).

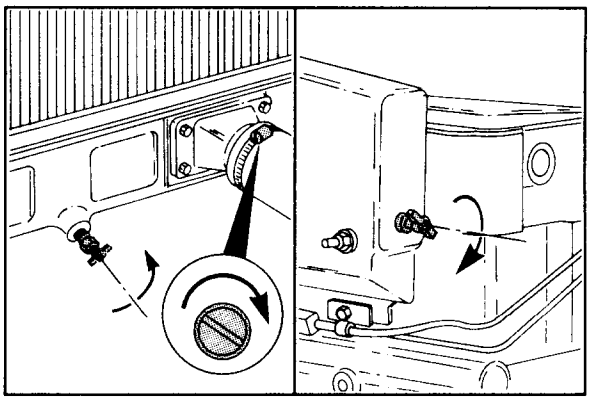

5. Close the engine draincock.
6. Close the oil cooler draincock.

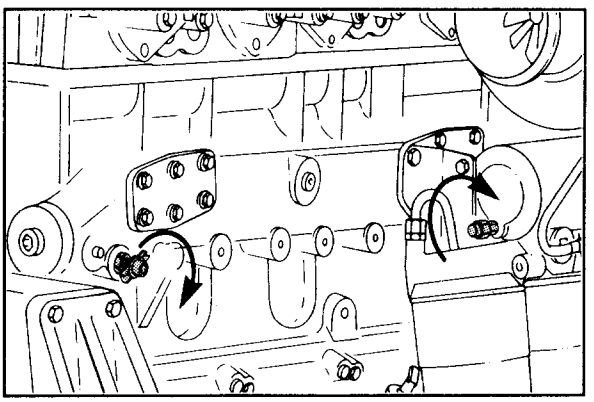

7. Use a mixture of 50 percent ethylene glycol antifreeze and 50 percent water to fill the cooling system.

NOTE: Use the correct DCA4 initial charge filter to obtain the correct cooling system protection. Refer to Procedure 1-09 and Cooling System Specifications, Reference 1-02.

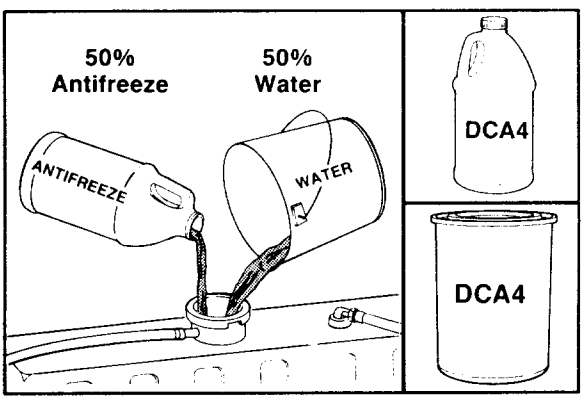

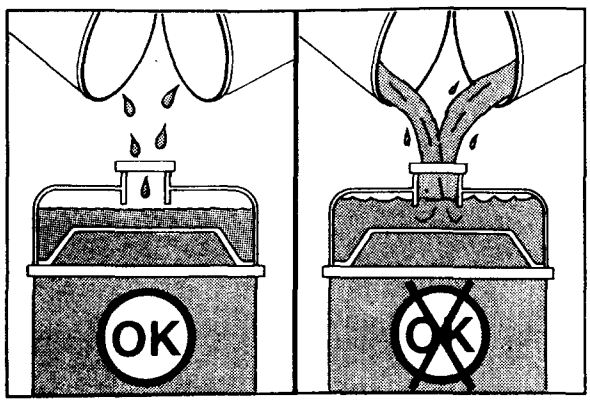

8. Fill the cooling system with coolant to the bottom of the fill neck in the radiator fill (or expansion) tank.

NOTE: Some Big Cam IV radiators have two fill necks, both of which **must** be filled.

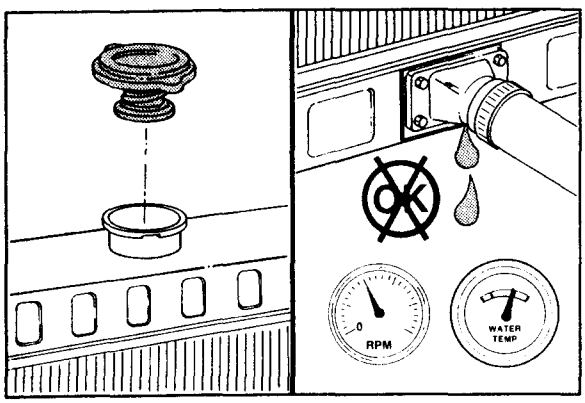

9. Install the radiator or fill cap.
10. Operate the engine until it reaches a temperature of 80°C [180°F], and check for leaks.

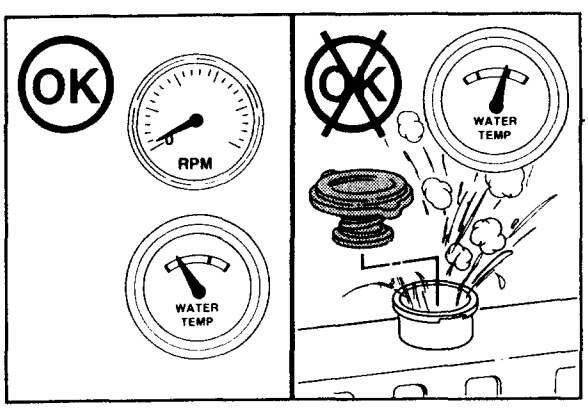

11. Shut the engine off, and allow it to cool.

Warning: Check the coolant level only when the engine is stopped. Wait until the temperature is below 50°C [120°F] before removing the pressure cap. Failure to do so can cause personal injury from heated coolant spray.

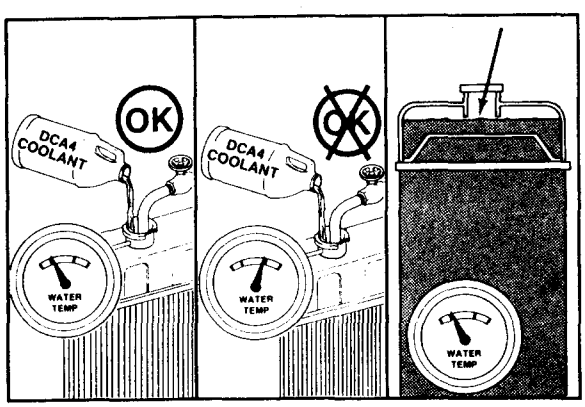

Caution: Do not add cold coolant to a hot engine. Engine castings may be damaged. Allow the engine to cool to below 50°C [120°F] before adding coolant.

12. Remove the radiator or fill cap, and check the coolant level. Add coolant if necessary.

Coolant Filter - Replace (1-08)

1. The correct coolant filter to be used is determined by the total cooling system capacity and other operational factors.

   Refer to Cooling System Specifications, Reference 1-02, for the correct filter to use.

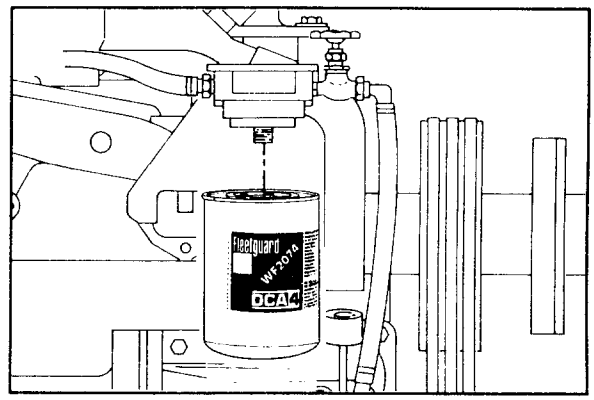

2. On Big Cam IV engines the coolant filter head is part of the thermostat housing. Two spring-loaded check valves are in the thermostat housing to prevent coolant leakage while changing the filter. (No manual shutoff valves are provided).

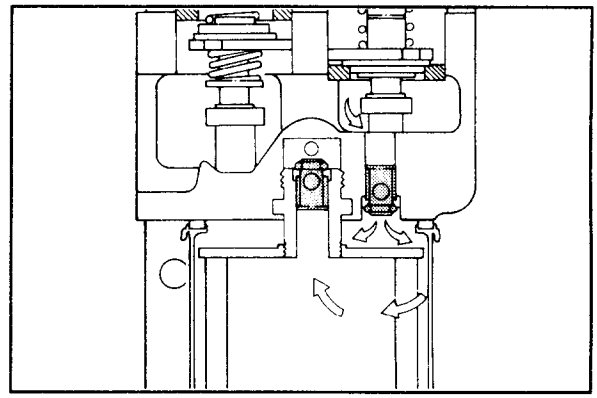

Warning: Wait until the temperature is below 50°C [120°F] before removing the coolant system pressure cap and close the shutoff valve(s), if equipped, before removing the coolant filter. Failure to do so can cause personal injury from heated coolant spray.

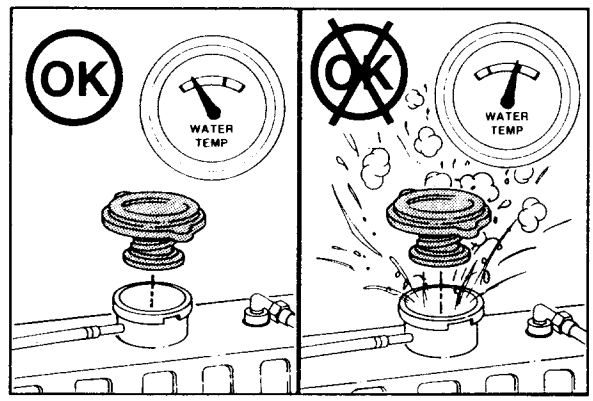

3. Remove and discard the coolant filter. Clean the gasket surface on the filter head.

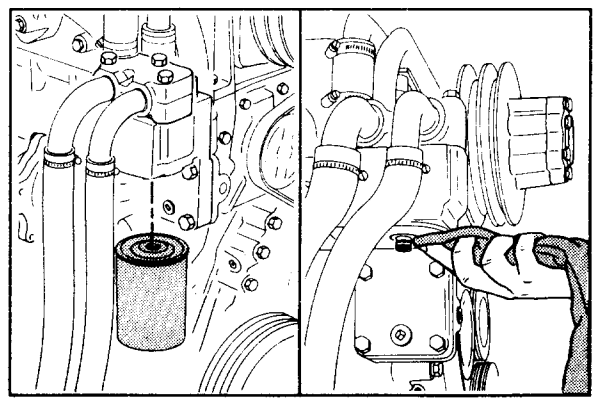

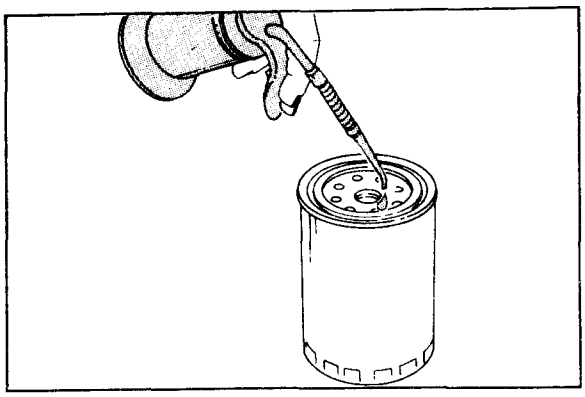

4. Apply a light film of lubricating oil to the coolant filter gasket sealing surface before installing the coolant filter.
5. Install the filter as specified by the filter manufacturer.

NOTE: Mechanical overtightening may distort the threads or damage the filter head.

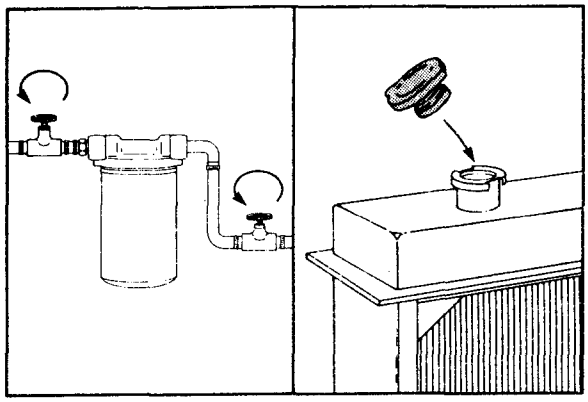

6. Open the shutoff valve(s), if equipped, and install the coolant system pressure cap.

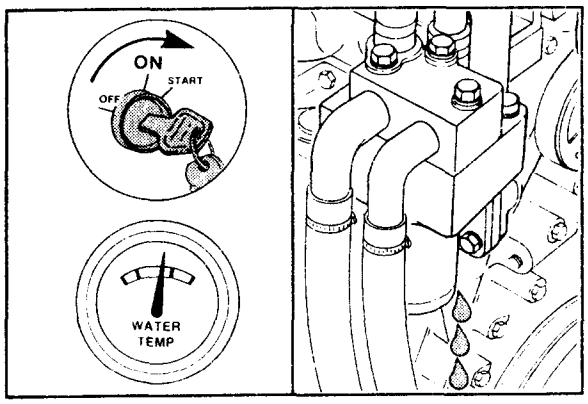

7. Operate the engine until the coolant temperature is above 80°C [180°F], and check for leaks.

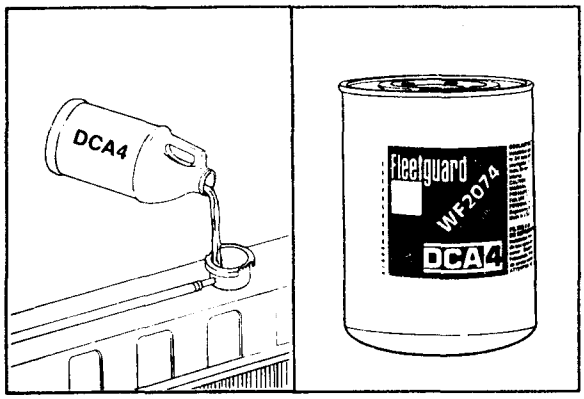

Diesel Coolant Additives (DCA4) - (1-09)

1. Diesel Coolant Additives (or equivalent) are used to prevent the buildup of corrosion and scale deposits in the cooling system.

2. When changing the coolant, the initial DCA4 (or equivalent) concentration **must** be between 1 and 2 units per 3.8 litres [1 U.S. gallon] of coolant (initial charge).

NOTE: The cooling system **must** be clean before adding DCA4 (or equivalent). Refer to Procedure 1-10.

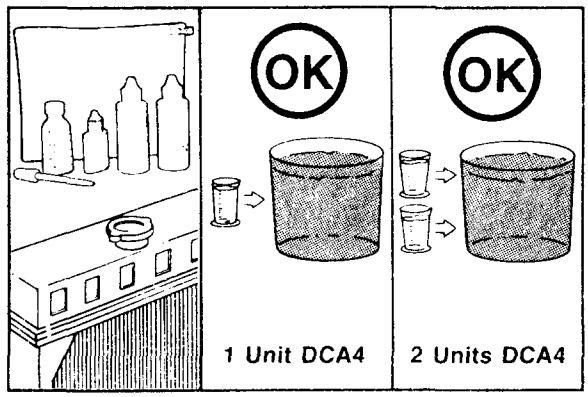

3. If coolant is added between drain intervals, additional DCA4 (or equivalent) will be required. Refer to this Procedure or see Service Tools, Reference 1-00, for the correct test kit to check DCA4 concentration.
4. Check the coolant just before changing the coolant filter to make sure that the correct maintenance coolant filter is being used.

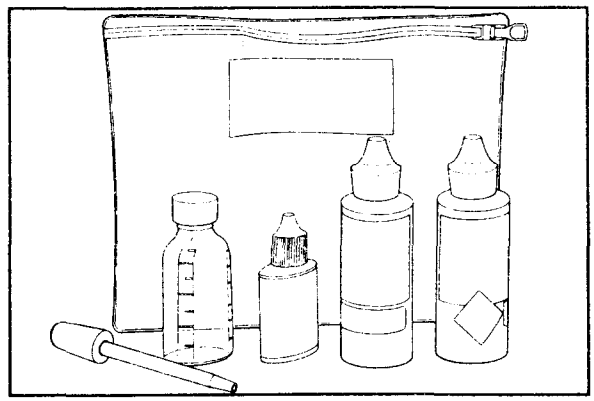

Caution: Inadequate concentration of the coolant additive can result in major corrosive damage to cooling system components. Overconcentration can cause formation of "gel" that can cause restriction/plugging of passages and overheating.

5. The DCA4 concentration **must not** fall below 1 unit per 3.8 litres [1 U.S. gallon] nor exceed 2 units per 3.8 litres [1 U.S. gallon].

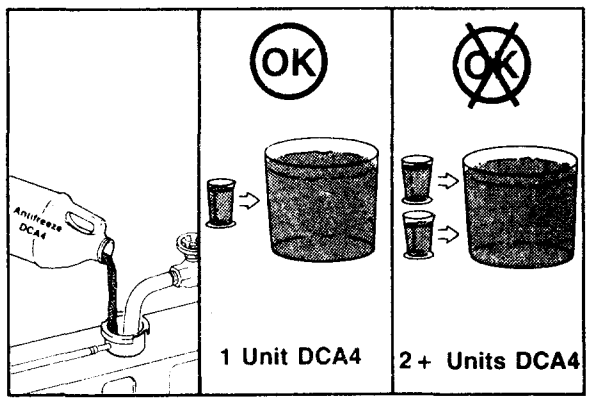

6. Use the correct Fleetguard® coolant filter to maintain the correct DCA4 concentration in the system.
7. Maintain the correct concentration by changing the maintenance coolant filter at each oil drain interval.

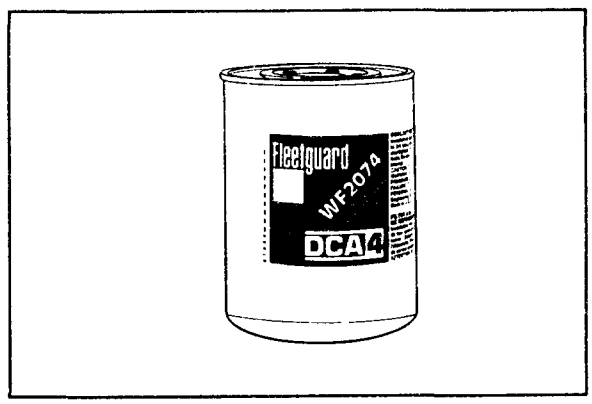

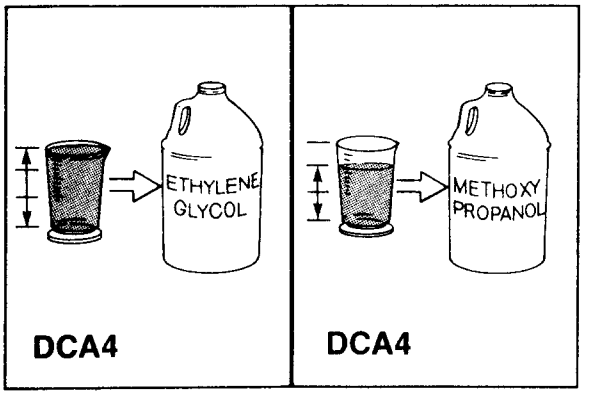

NOTE: DCA4 is compatible with all permanent-type antifreeze **except** Methoxy Propanol. If Methoxy Propanol antifreeze is used, reduce the amount of DCA4 by one-third to prevent inhibitor loss due to precipitation caused by chemical incompatibility.

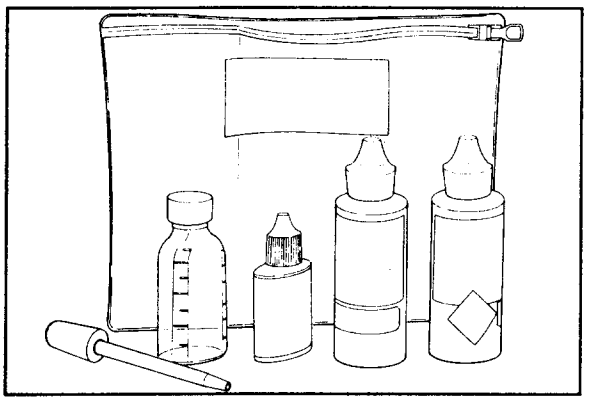

DCA4 Test Kit

DCA4 is formulated for use in all Cummins engines.

Use only Coolant Test Kit, Fleetguard® Part No. 3300846S, to check the coolant additive concentration when DCA4 is used. Refer to the instructions on page 11.

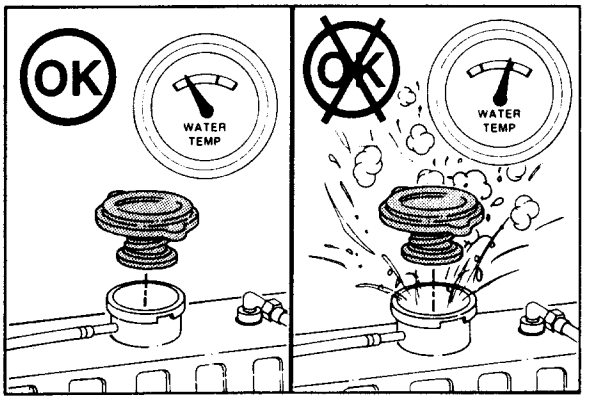

Cooling System, Clean - (1-10)

System Flushing

Warning: Wait until the temperature is below 50°C [120°F] before removing the coolant system pressure cap. Failure to do so can cause personal injury from heated coolant spray.

NOTE: The performance of RESTORE is dependent on time, temperature, and concentration levels. An extremely scaled or flow restricted system, for example, may require higher concentrations of cleaners, higher temperatures, or longer cleaning times. RESTORE can be safely used up to twice the recommended concentration levels. Extremely scaled or fouled systems may require more than one cleaning.

1. Drain the cooling system. Refer to Procedure 1-06. Do **not** allow the cooling system to dry out.
2. Do **not** remove the coolant filters.

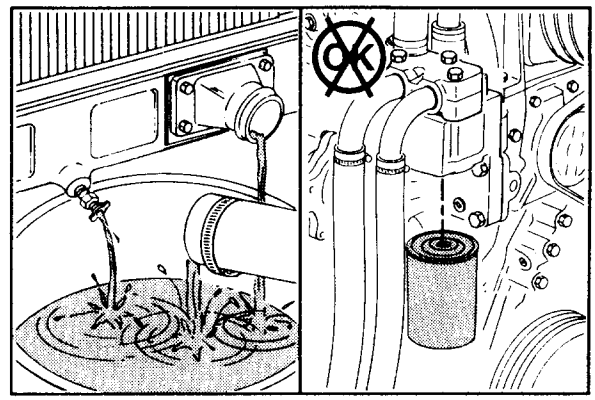

Caution: Fleetguard® RESTORE contains no antifreeze. Do not allow the cooling system to freeze during the cleaning operation.

3. Immediately add 3.8 litres [1 U.S. gallon] of Fleetguard® RESTORE (or equivalent) for each 38 to 57 litres [10 to 15 U.S. gallons] of cooling system capacity, and fill the system with plain water.
4. Turn the heater temperature switch to high to allow maximum coolant flow through the heater core. The blower does **not** have to be on.

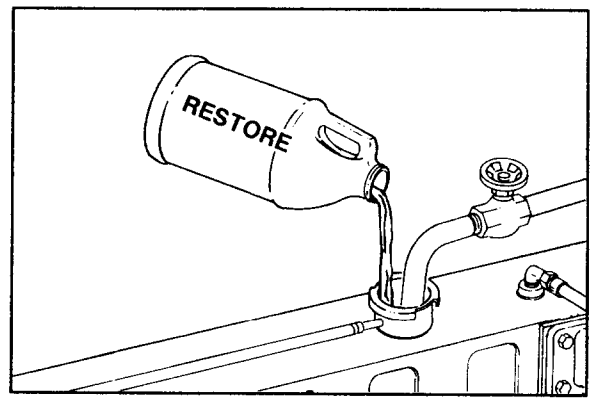

5. Operate the engine at normal operating temperatures (at least 85°C [185°F]) for 1 to 1 1/2 hours.
6. Shut the engine off, and drain the cooling system. Refer to Procedure 1-06.

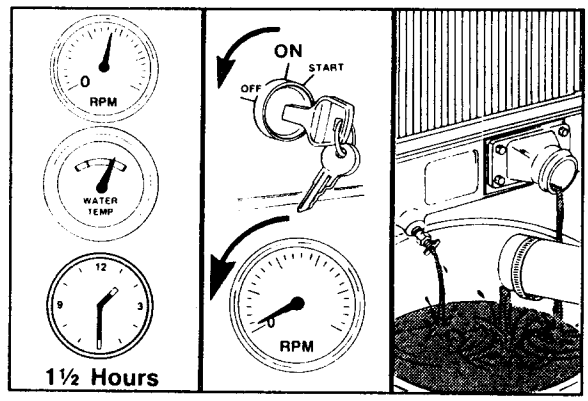

7. Fill the cooling system with clean water. Refer to Procedure 1-07.

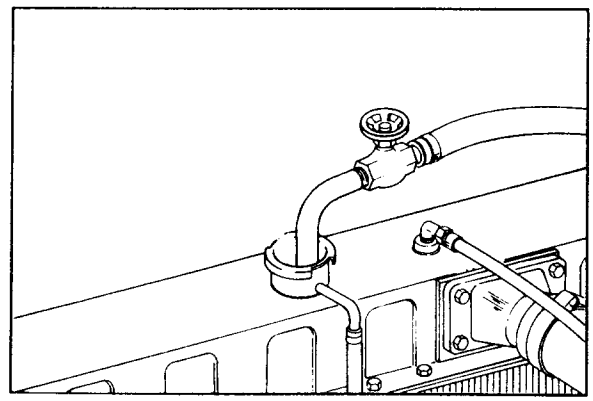

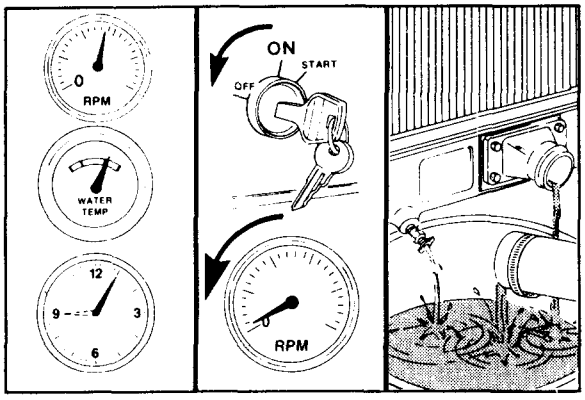

8. Operate the engine at high idle for 5 minutes with the coolant temperature above 85°C [185°F].
9. Shut the engine off, and drain the cooling system. Refer to Procedure 1-06.

NOTE: If the water being drained is still dirty, the system **must** be flushed again until the water is clean.

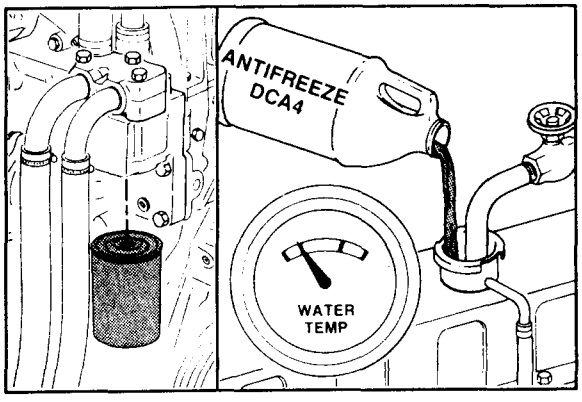

10. Install a new coolant filter, and fill the cooling system with a fresh mixture of 50 percent low silicate antifreeze and 50 percent water. Refer to Procedure 1-07.

NOTE: Use an initial charge filter to bring the coolant to the correct DCA4 concentration level. Refer to Procedure 1-09 and Cooling System Specifications, Reference 1-02.

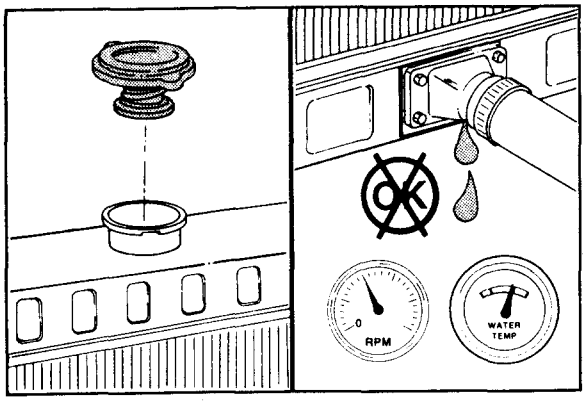

11. Install the pressure cap. Operate the engine until it reaches a temperature of 80°C [180°F], and check for coolant leaks.

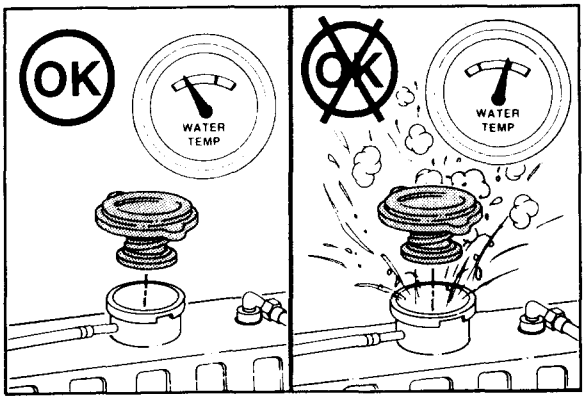

Cooling System - Test For Air Or Combustion Gases (1-11)

Warning: Wait until the temperature is below 50°C [120°F] before removing the coolant system pressure cap. Failure to do so can cause personal injury from heated coolant spray.

1. Allow the engine to cool, and remove the radiator cap.

2. Install a radiator pressure cap which has had the spring and the pressure relief valve removed to allow free flow from the overflow tube.
3. Attach a rubber hose to the radiator overflow connection.
4. Put the free end of the hose below the water level in a container of water.

NOTE: The pressure cap **must** be tightly sealed in the top of the radiator fill neck.

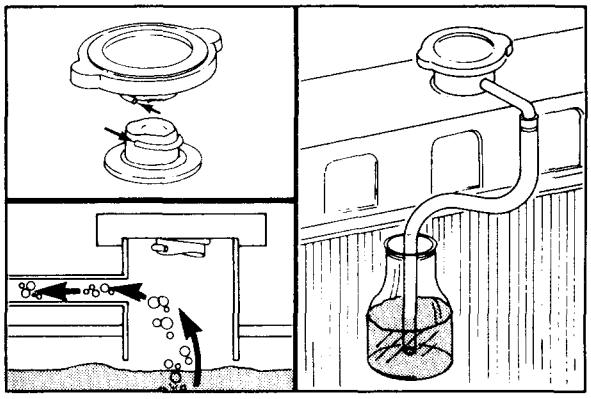

5. Operate the engine at rated RPM until it reaches a temperature of 80°C [180°F].
6. Check for a continuous flow of air bubbles from the hose in the water container.

NOTE: The engine **must** be operated at rated speed and full load to detect air in the cooling system due to a defective aftercooler core.

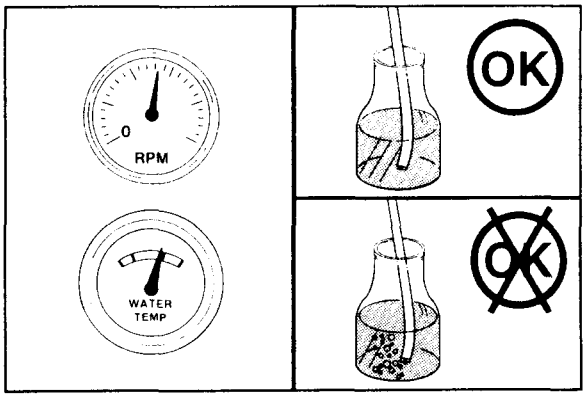

If no air is found in the system, do the following:

- Remove the test equipment.
- Check the coolant level and fill if necessary.
- Install the radiator pressure cap.
- Operate the engine until it reaches a temperature of 80°C [180°F], and check for coolant leaks.

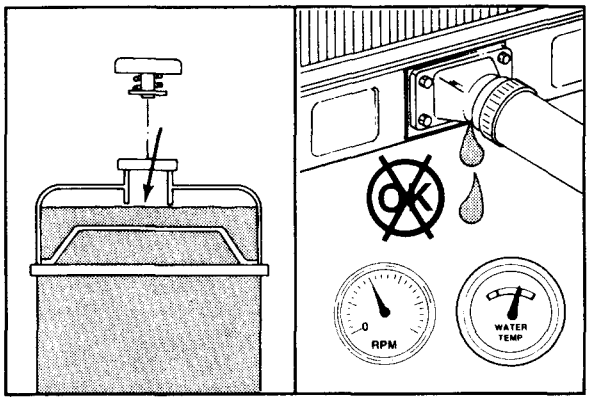

7. A continuous flow of air bubbles indicates the following:

- Defective fan or shutter air control valve.
- Air compressor head or head gasket leakage.
- Aftercooler core leakage.
- Cylinder liner protrusion incorrect.
- Cracked cylinder liner.
- Cylinder head or gasket leakage.

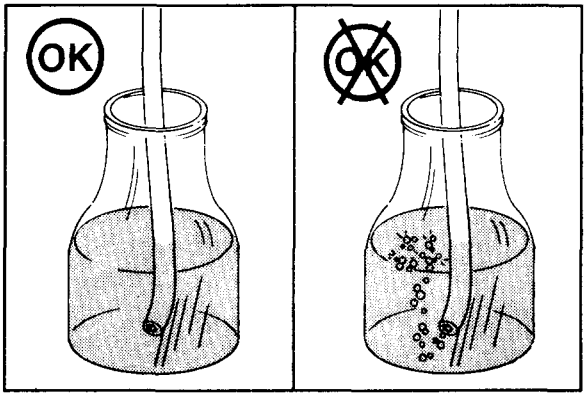

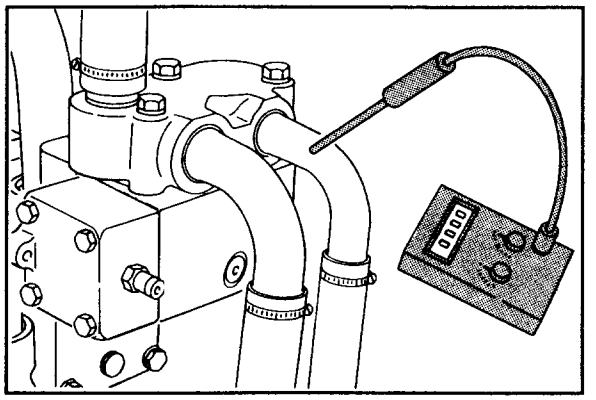

Fan And Shutter Air Control Valve Check

Caution: The engine can overheat with the fan control or the shutter air control valve disconnected. Monitor the engine coolant temperature while performing this test. The coolant temperature must not exceed 100°C [212°F].

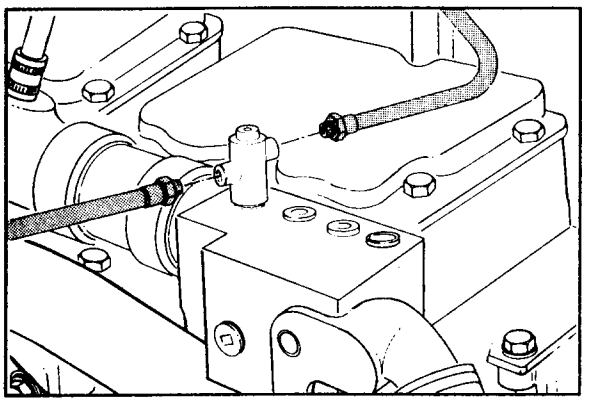

1. Disconnect the vehicle air supply hose to the fan and the shutter air control valve. Install a plug in the air supply hose. If the vehicle is equipped with an air control valve for both the fan and the shutters, check only one valve at a time.

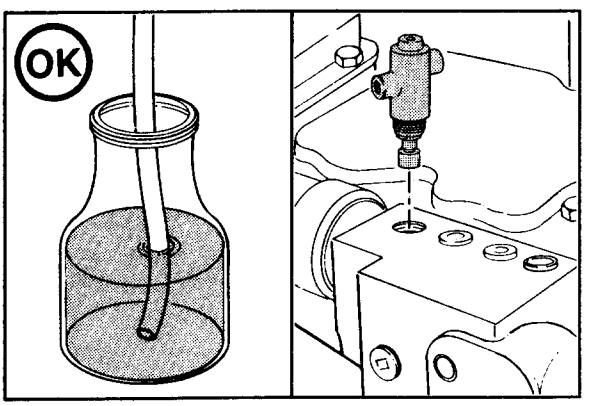

2. Repeat the test for air in the cooling system as previously described. If no air is found in the cooling system with the air control valve(s) isolated, install a new control valve.

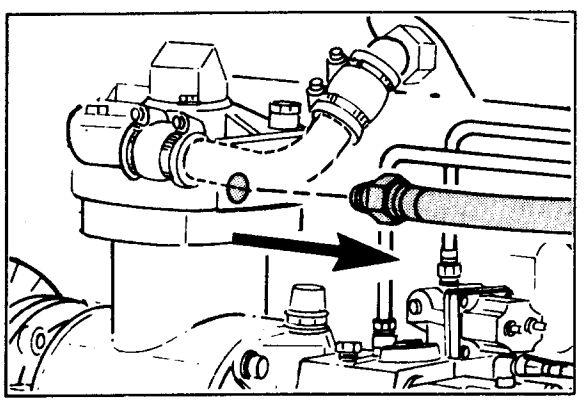

Air Compressor Check

Caution: The air compressor discharge line must be disconnected at the compressor to allow the compressor to discharge air to the atmosphere during this next test to prevent the compressor from overheating. Do not run the engine over 5 minutes with components isolated from the cooling system. Component damage can occur.

1. Disconnect the coolant supply and the return hoses from the air compressor. Use a short piece of hose to connect the hoses together to prevent coolant loss during engine operation.

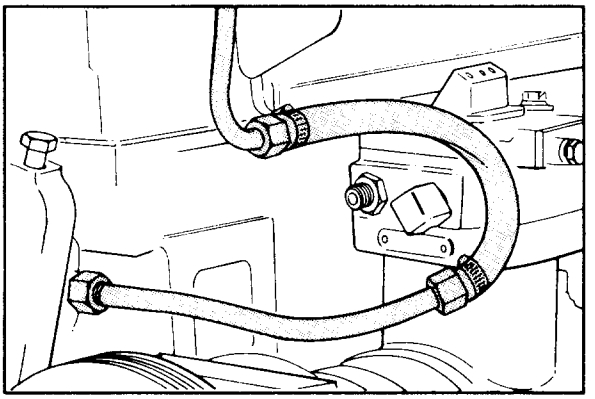

2. Repeat the test for air in the cooling system as previously described. If no air is found in the cooling system with the air compressor isolated, install a new or rebuilt air compressor.

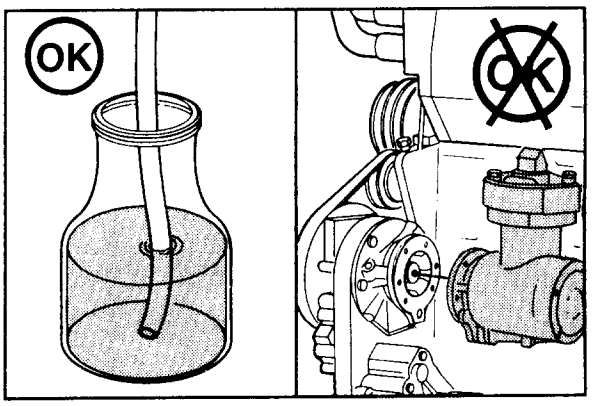

Aftercooler Core Check

1. Disconnect the coolant supply and the return hoses from the aftercooler. On Big Cam IV engines, use a short section of 1-inch diameter hose to connect the coolant supply hoses together. On Big Cam III engines, plug the hoses after removing them from the aftercooler.

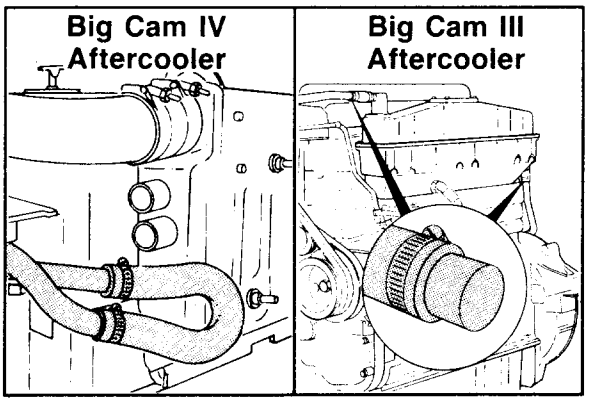

NOTE: The engine **must** be operated at rated speed and full load to detect air in the cooling system due to a defective aftercooler core.

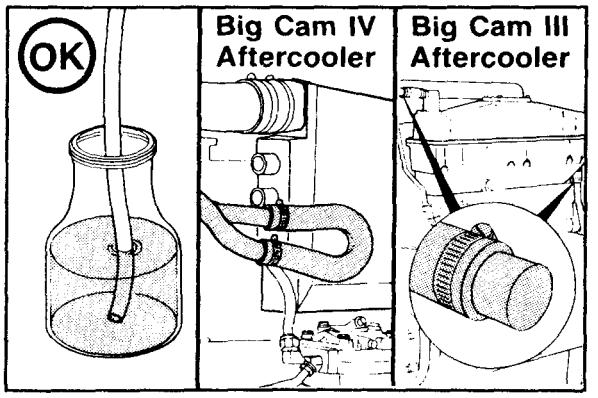

2. Repeat the test for air in the cooling system as previously described. If no air is found in the cooling system with the aftercooler isolated, install a new aftercooler.

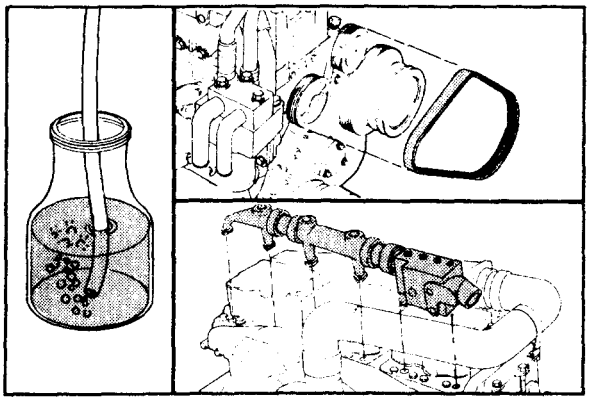

Cylinder Head, Head Gasket, And Cylinder Liner Check

1. If the engine still fails the test for air in the cooling system with the fan and shutter controls, the air compressor, and the aftercooler isolated from the cooling system, remove the water pump belt and the water manifold.

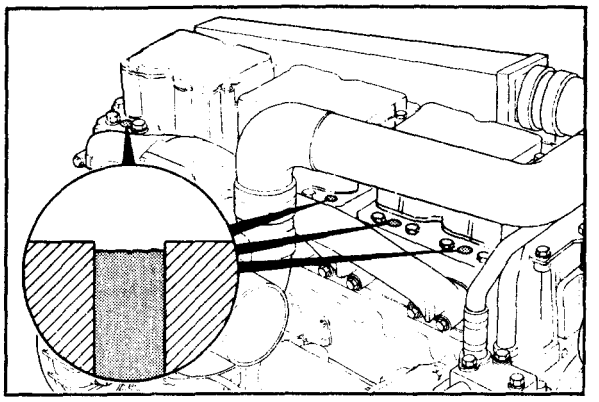

2. Position the vehicle on level ground. Fill the cooling system until the coolant is level with the cylinder head coolant outlet ports.

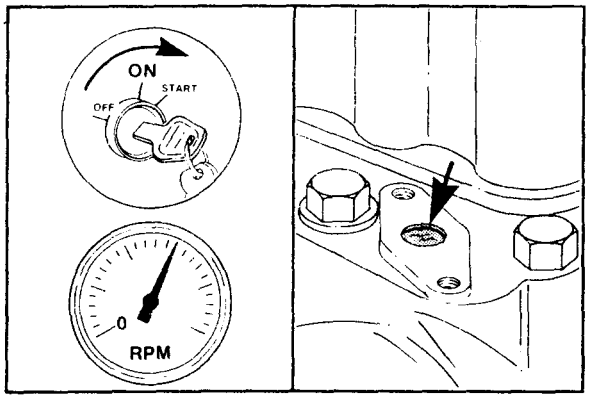

Caution: Do not operate the engine for more than 5 minutes. Engine damage can occur.

3. Start the engine, and operate it at high idle. Check for air bubbles out of the cylinder head coolant outlet ports.

4. If bubbles are found in one or more of the ports, remove the corresponding cylinder head or heads. Inspect the head gasket for leakage.

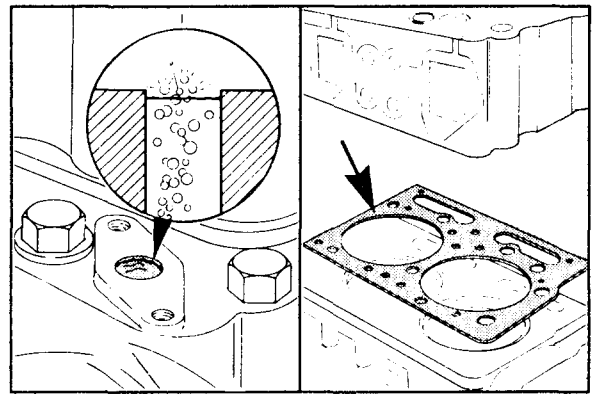

5. If no indication of leakage is found, pressure check the cylinder head. Refer to Section 7, Procedure 7-12.

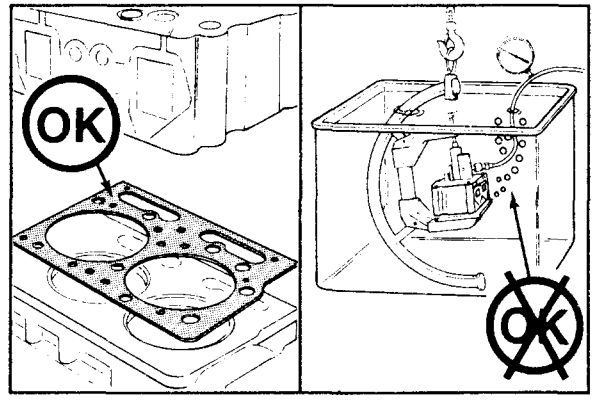

6. If no indication of leakage is found from the cylinder head, check the cylinder liner protrusion. The protrusion **must** be 0.08 mm to 0.15 mm [0.003-inch to 0.006-inch]. Negative protrusion can allow combustion gases to enter the cooling system.

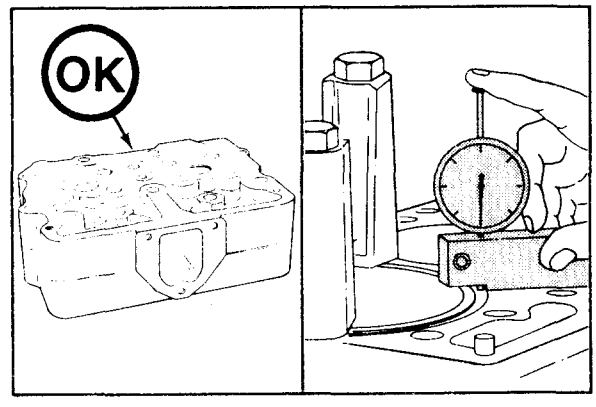

7. Remove the cylinder liner or liners which correspond to the cylinder head coolant outlet port where bubbles are found.

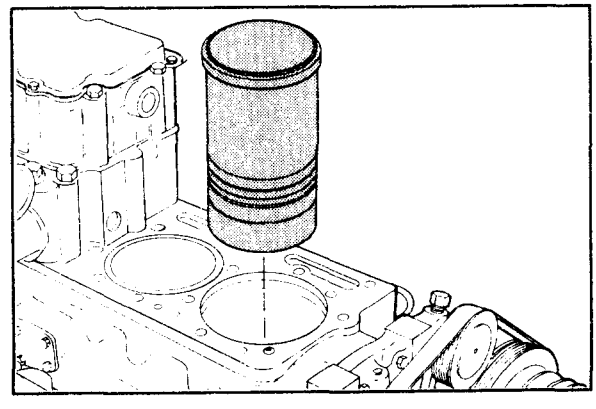

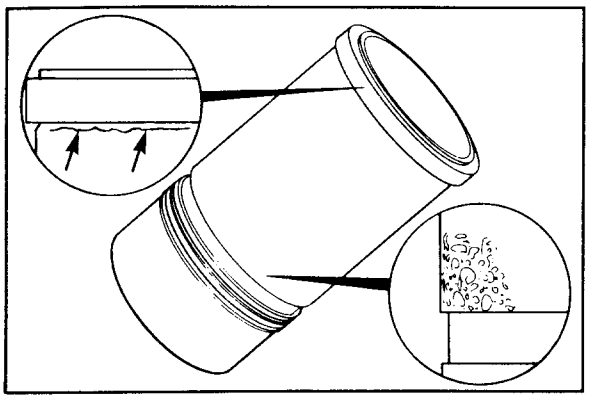

8. Inspect the liner for cracks or porosity. Refer to Section 7, Procedure 7-24.

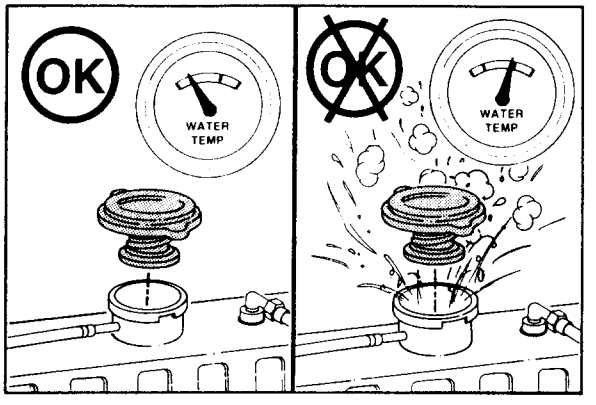

Cooling System - Pressure Test (1-12)

Warning: Wait until the temperature is below 50°C [120°F] before removing the coolant system pressure cap. Failure to do so can cause personal injury from heated coolant spray.

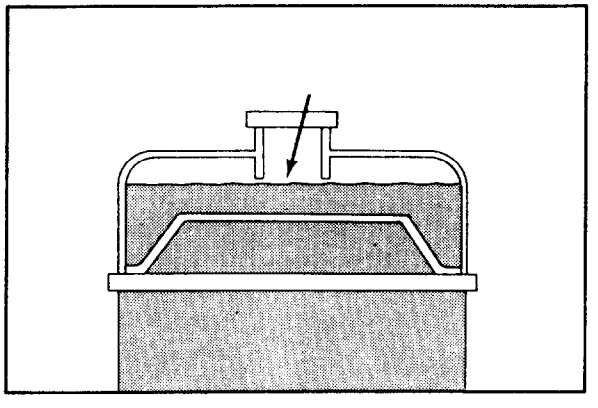

1. Check the coolant level and fill if necessary.

NOTE: If coolant is added, additional DCA4 (or equivalent) will be required. For the correct test kit to check DCA4 concentration, refer to Procedure 1-09.

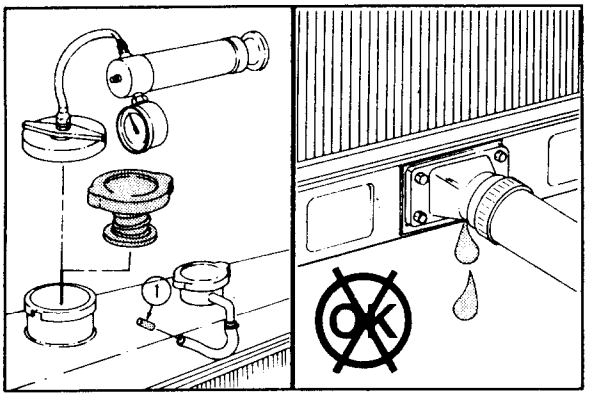

2. If the radiator is equipped with a pressure relief valve, install a plug in the overflow tube (1).

Caution: Do not apply more than 140 kPa [20 psi] air pressure to the cooling system. The water pump seal may be damaged.

3. Install the pressure tester on the radiator fill neck or surge tank (if equipped), and apply 140 kPa [20 psi] maximum air pressure.

4. Inspect for coolant leaks and repair if necessary.
5. Remove the pressure test equipment and the plug from the pressure relief valve overflow tube (if equipped).

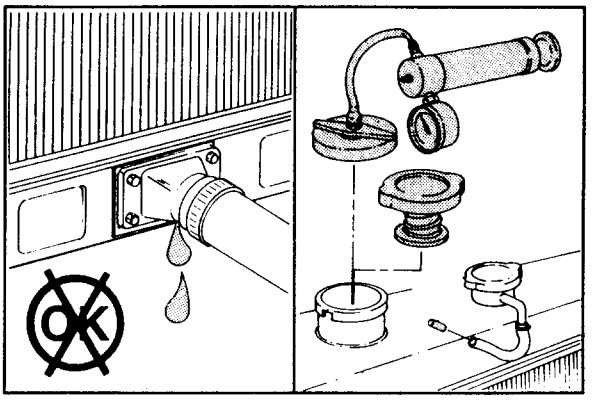

6. Install the coolant system pressure cap.

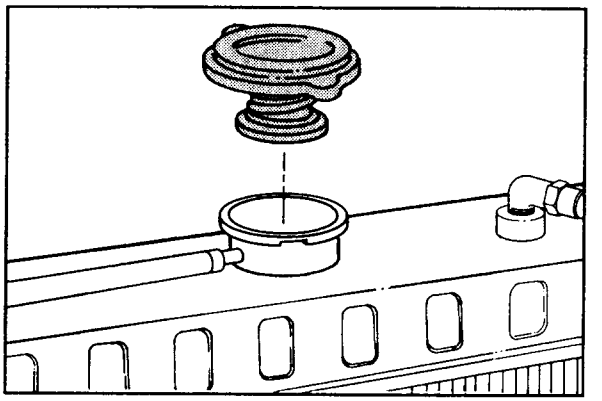

Hoses - Check (1-13)

Caution: Do not bend or deform the hoses during inspection. This can cause the hoses to crack.

1. Inspect all hoses for cracks or cuts.
2. Inspect all hoses for signs of ballooning or collapsing.

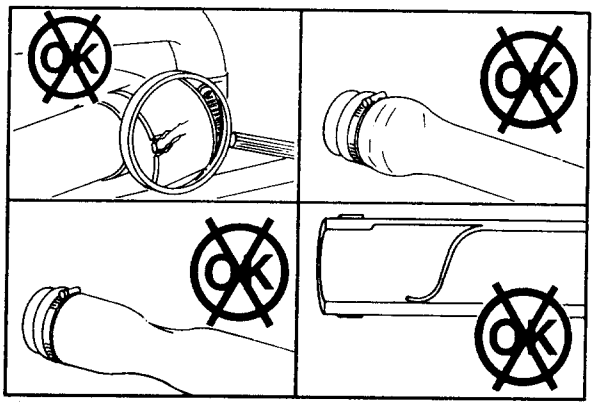

NOTE: Engine overheating or coolant overflow can result from internal deterioration of the coolant hoses. Refer to "Coolant Temperatures Above Normal" or "Loss of Engine Coolant" in the Troubleshooting Logic Chart. Particles of deteriorated hose can restrict or completely stop the coolant flow.

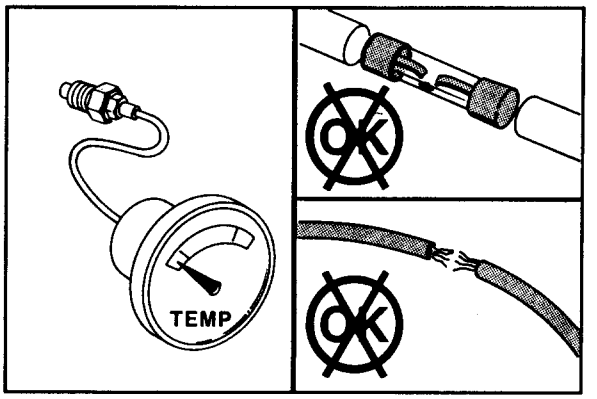

Coolant Temperature Gauge - Check (1-14)

1. Check for a blown fuse.
2. Check the wiring from the gauge to the sending unit for a broken connection.

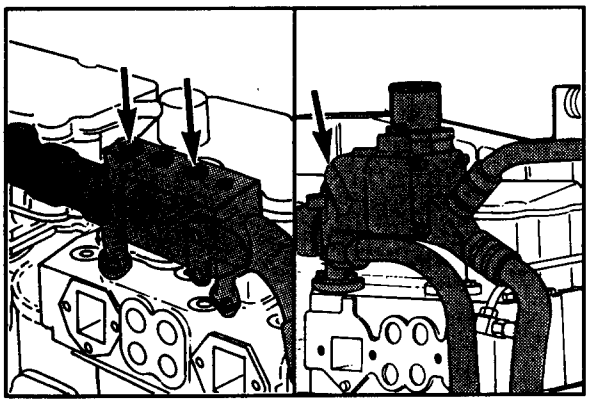

3. Make sure the temperature sending unit is mounted in the front upper water manifold.

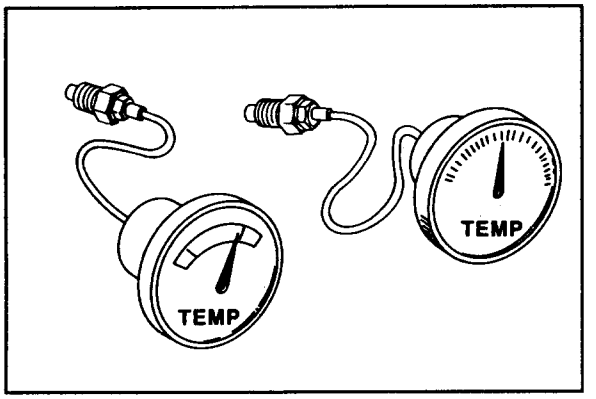

4. Use a temperature gauge of known accuracy to check the existing gauge.
5. Replace a faulty gauge.

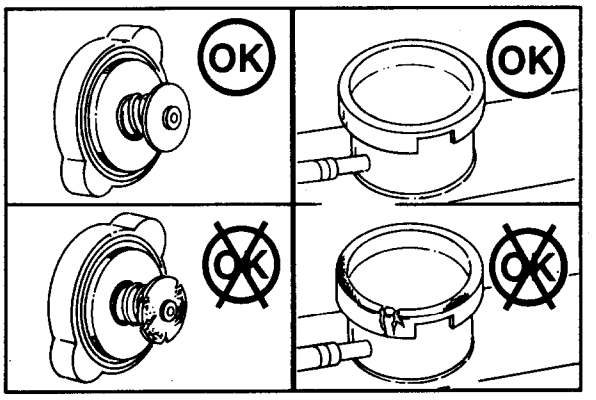

Radiator Pressure Cap - Check (1-15)

1. Visually inspect the rubber seal of the pressure cap for damage.
2. Visually inspect the radiator fill neck for cracks or other damage.
3. Refer to the radiator manufacturer's instructions if the fill neck is damaged.

NOTE: Make sure the correct radiator cap is being used. Refer to Cooling System Specifications, Reference 1-02.

4. Pressure test the radiator cap.
5. The pressure cap **must** seal within 14 kPa [2 psi] of the value stated on the cap, or it **must** be replaced.

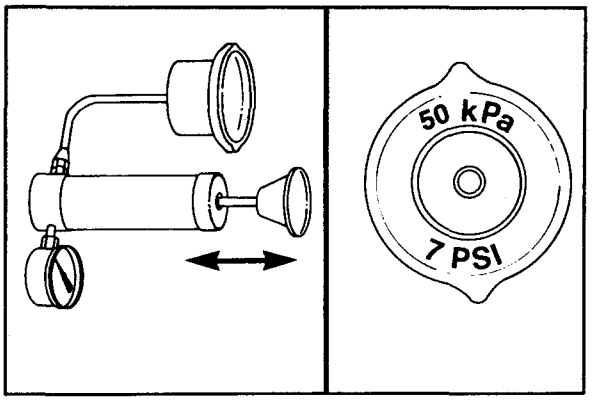

Radiator Fins - Inspect (1-16)

1. Visually inspect the radiator for plugged radiator fins.
2. Use 550 kPa [80 psi] air pressure to blow the dirt and debris from the fins. Blow the air **in the opposite direction** of the fan air flow.

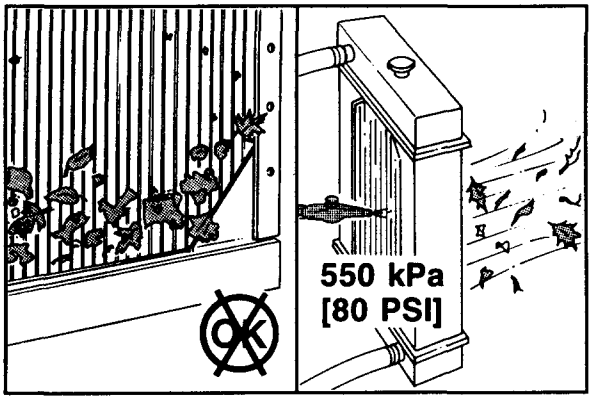

3. Visually inspect the radiator for bent or broken fins.

NOTE: If the radiator **must** be replaced due to bent or broken fins which can cause the engine to overheat, refer to the manufacturer's replacement procedures.

4. Visually inspect the radiator for core and gasket leaks.

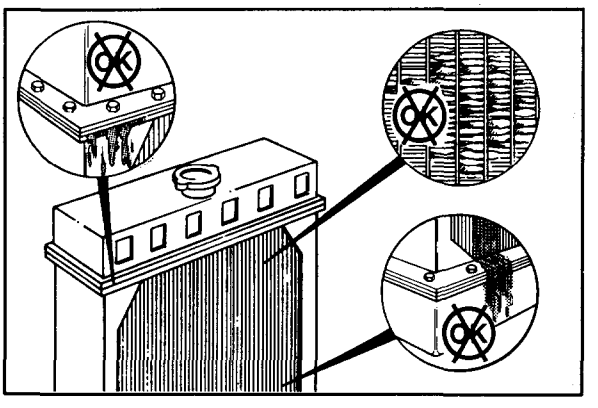

Shutter Operation - Check (1-17)

1. The shutters are fully closed when the vehicle air pressure reaches approximately 380 kPa [55 psi]. They will remain closed until the coolant temperature reaches the value stamped on the control.

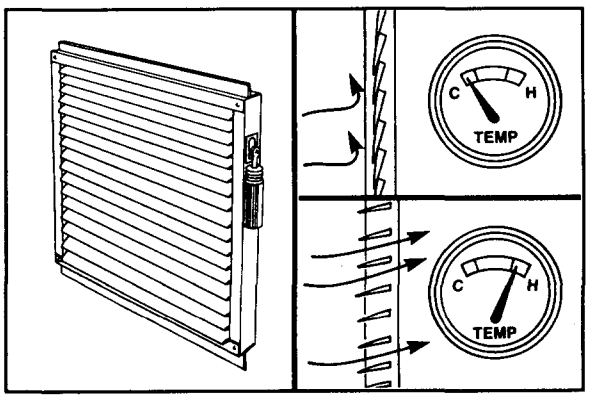

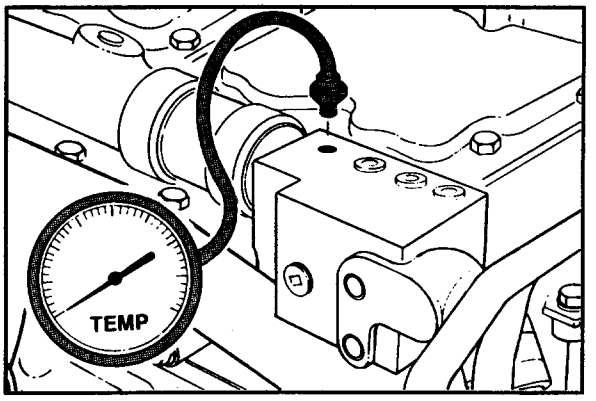

2. install a master temperature gauge which is known to be accurate in the front upper water manifold. A thermocouple may be used.

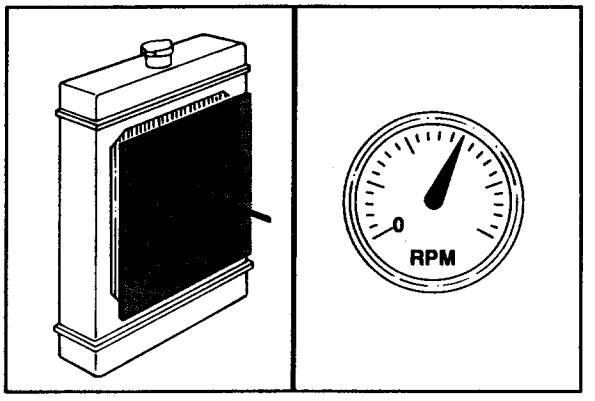

3. Restrict the radiator air flow.
4. Operate the engine at rated RPM.

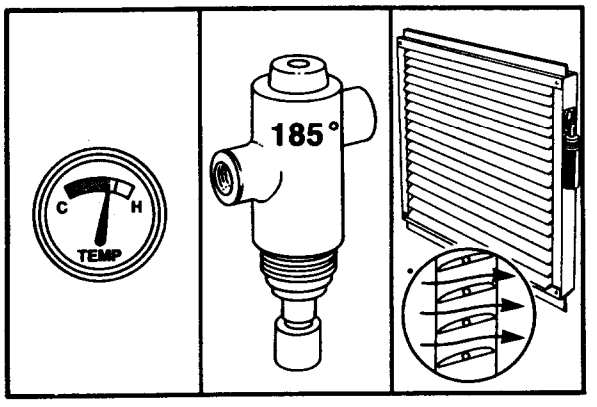

5. When the coolant temperature reaches the temperature stamped on the control, check the shutters to see if they are open. The shutters **must** be fully open.

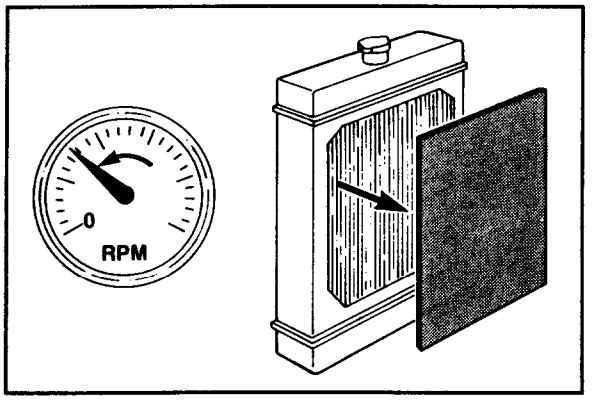

6. Return the engine to idle, and remove the radiator air restriction.

7. When the coolant temperature drops to approximately 6°C [10°F] below the temperature stamped on the control, the shutters will be fully closed.

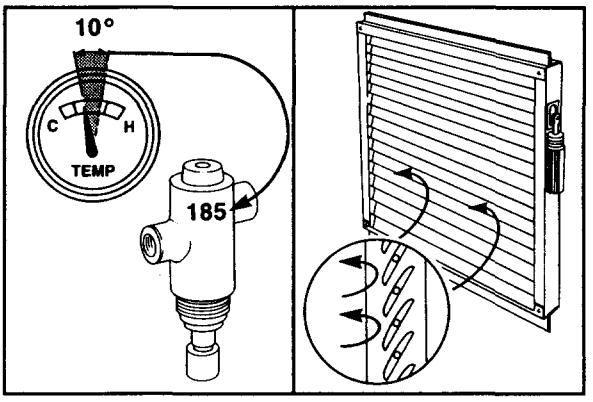

8. If the shutters do **not** operate correctly, refer to the shutter manufacturer's service manual.

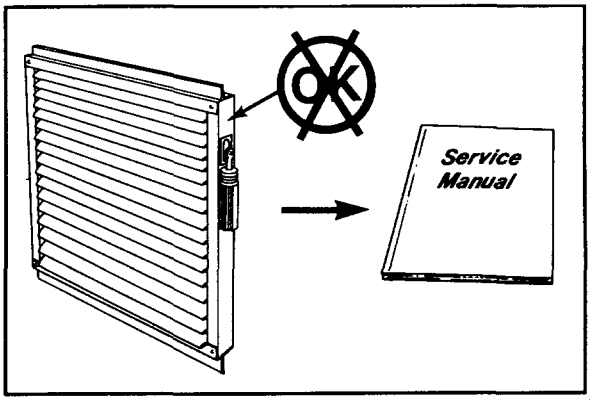

Fan, Shroud, Spacer and Pulley - Inspect (1-18)

Fan

Warning: Do not rotate the engine by pulling or prying on the fan. Do not straighten a bent fan blade or continue to use a damaged fan. A bent or damaged fan blade can fail during operation and cause serious personal injury or property damage.

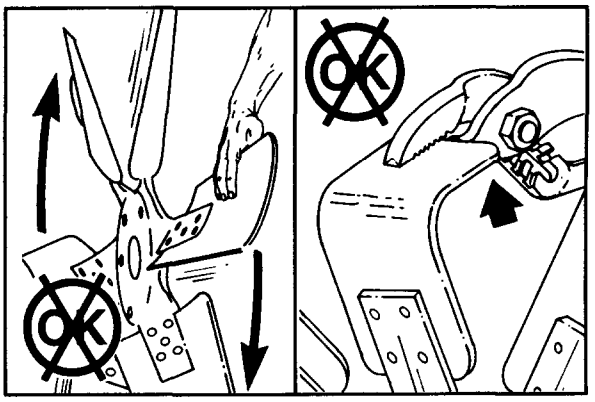

NOTE: Replace the original equipment fan with a fan of the identical part number. Cummins Engine Company, Inc. **must** approve any other fan changes.

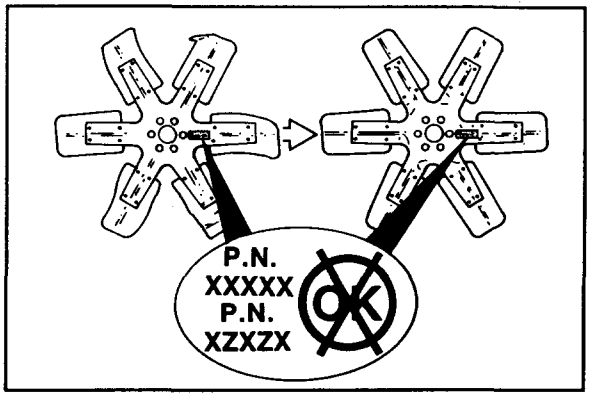

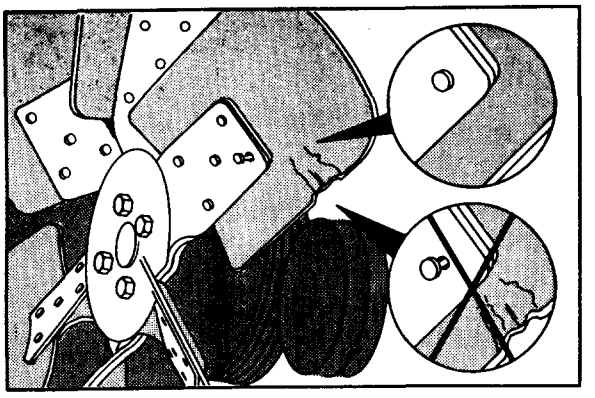

1. Visually check the fan for cracks, loose rivets, and bent or loose blades. Check the fan to make sure it is securely mounted. Tighten the capscrews if necessary. Replace damaged fans.

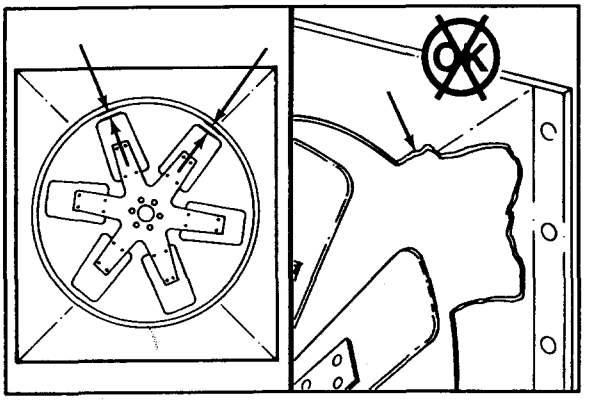

Fan Shroud

1. Inspect the fan shroud for the correct fan clearance. Refer to the vehicle manufacturer's specifications.
2. Visually inspect the shroud for cracks, air leaks, or damage. Replace if necessary. Refer to the manufacturer's instructions.

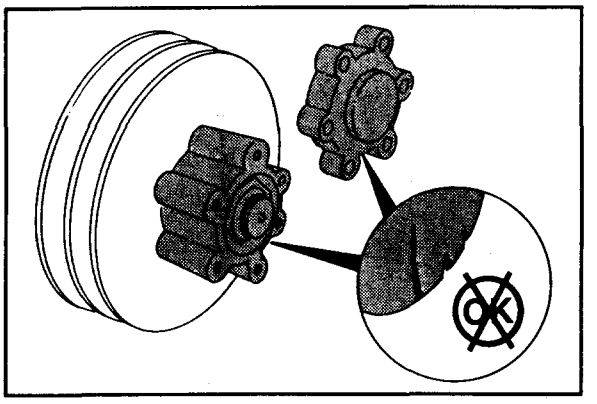

Fan Spacer And Pulley

1. Visually inspect the fan hub and the spacer (if used) for cracks or damage. Replace if necessary. Refer to Procedures 1-26 and 1-18, respectively.

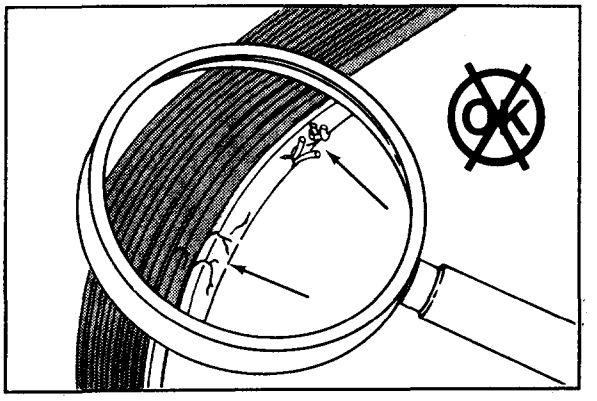

Water Pump Belt - Replace (1-19)

Inspect

1. Visually inspect the belt for the following:
   - Cracks.
   - Glazing.
   - Tears or cuts.

2. Visually inspect the pulley alignment. Pulley misalignment **must not** exceed 0.5 mm per cm [1/16-inch per foot] of distance between the pulley centers.
3. Replace the idler pulley or the water pump if they are **not** in alignment. Refer to Procedures 1-27 and 1-28, respectively.

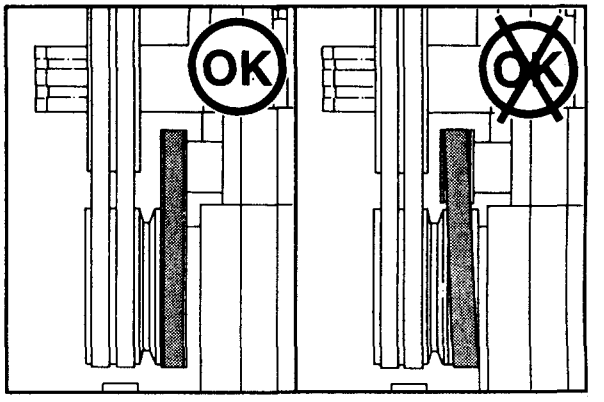

Remove

1. Remove the fan drive belts. Refer to Procedure 1-20.

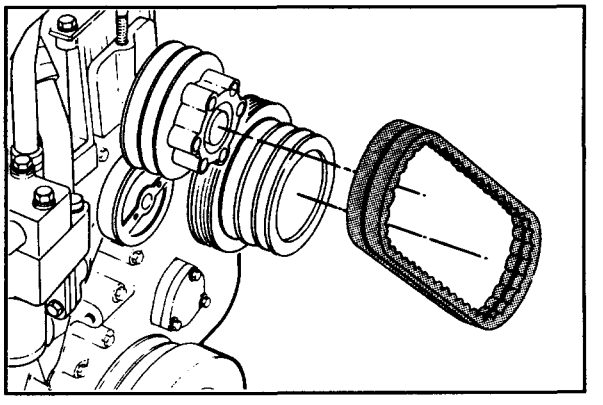

2. Loosen the idler pulley shaft lock nut.
3. Turn the adjusting screw **counterclockwise** to release tension, and remove the water pump belt.

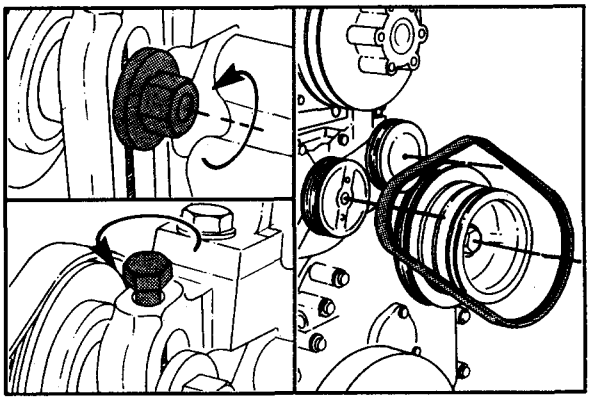

4. Visually inspect the idler and the water pump pulleys for cracks or broken grooves. Replace if necessary. Refer to Procedures 1-27 and 1-28, respectively.

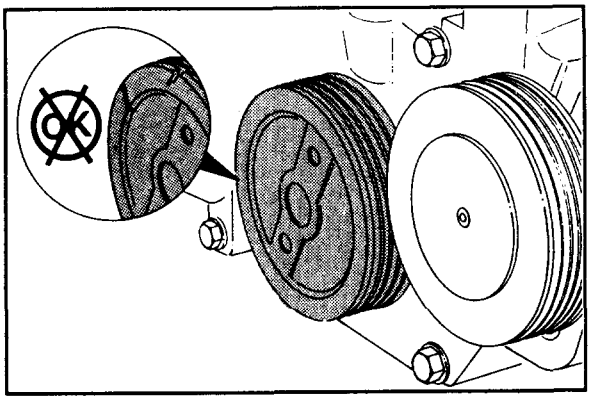

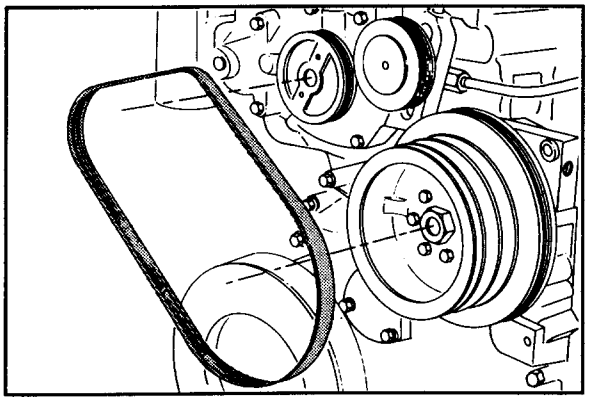

Install

1. Install a new belt on the pulleys.

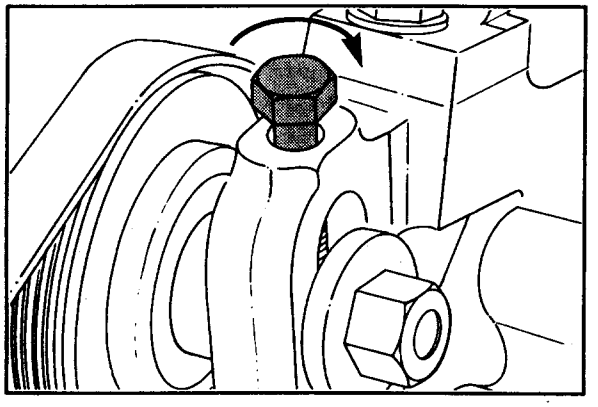

2. Turn the adjusting screw to adjust belt tension.

NOTE: Belt tension can increase when the lock nut is tightened. Do **not** adjust belt tension to full value with the adjusting screw.

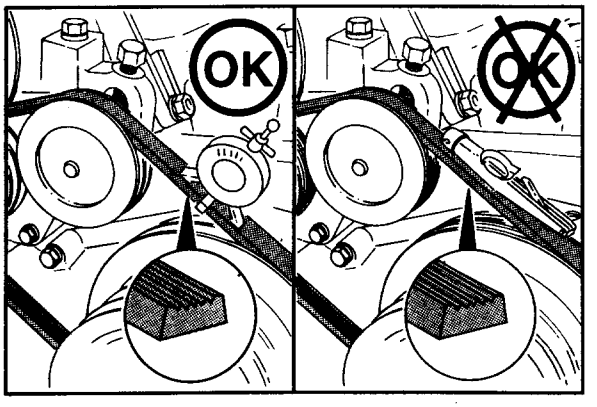

3. Use Part No. ST-1293 Belt Tension Gauge to measure the belt tension.
   - 200 to 220 N•m [150 to 160 ft-lbs] (new belt).
   - 95 to 165 N•m [70 to 120 ft-lbs] (used belt).

NOTE: Do **not** use an ST-1274 Belt Tension Gauge on V ribbed belts because it will **not** give an accurate measurement.

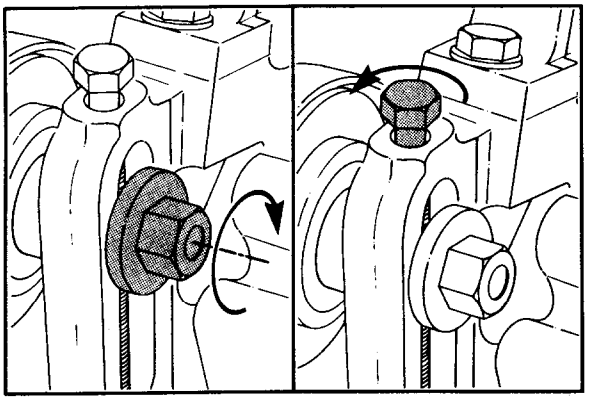

4. Tighten the idler pulley shaft lock nut to 70 N•m [50 ft-lbs] torque.
5. Loosen the adjusting screw 1/2-turn to prevent breakage.
6. Measure the belt tension again. Adjust if necessary.
7. Install the fan drive belts. Refer to Procedure 1-20.

Fan Drive Belts - Replace (1-20)

Inspect

1. Visually inspect the belts for the following:

   - Cracks.
   - Glazing.
   - Tears or cuts.

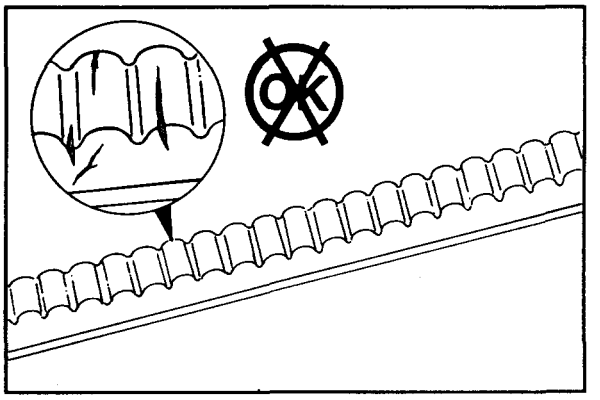

2. Visually inspect the pulley alignment. Pulley misalignment **must not** exceed 0.5 mm per cm [1/16-inch per foot] of distance between the pulley centers. Inspect, repair, or replace the fan hub or the fan hub support bracket if pulley misalignment exceeds 0.5 mm per cm [1/16-inch per foot]. Refer to Procedure 1-26.

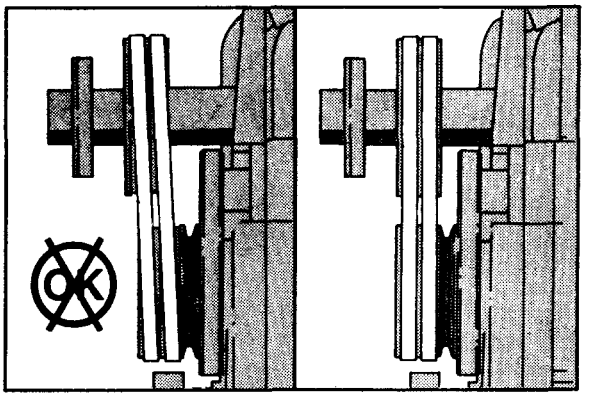

Remove

1. Loosen the four capscrews which secure the fan hub shaft to the bracket.

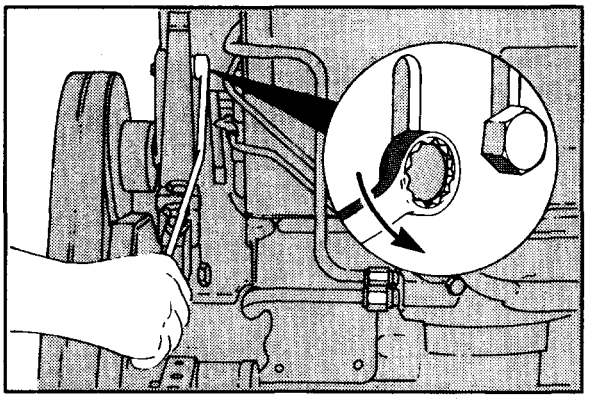

2. Turn the adjusting screw **counterclockwise** to release tension, and remove the belts.

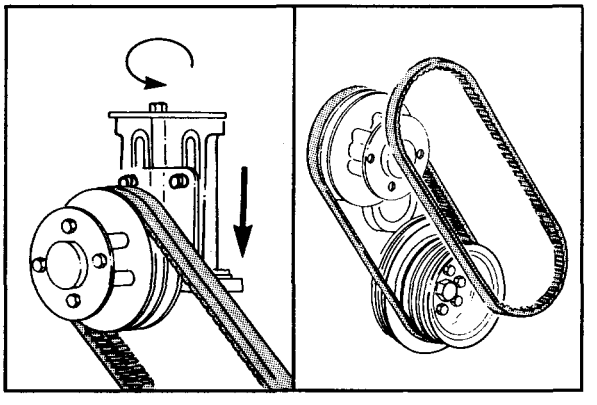

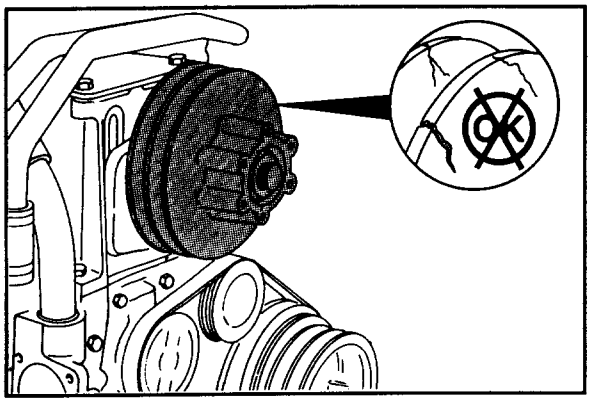

3. Visually inspect the pulleys for cracks or broken grooves. Replace if necessary.

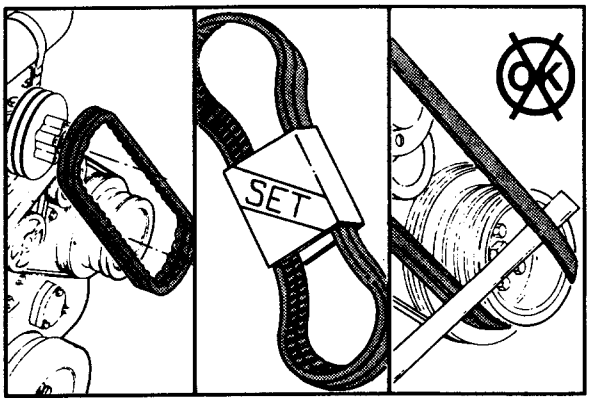

Install

1. Install new belts on the pulley. When a drive uses two or more belts, replace the belts as a complete set.

NOTE: To prevent damage, do **not** roll a belt over the pulley or pry it on with a tool.

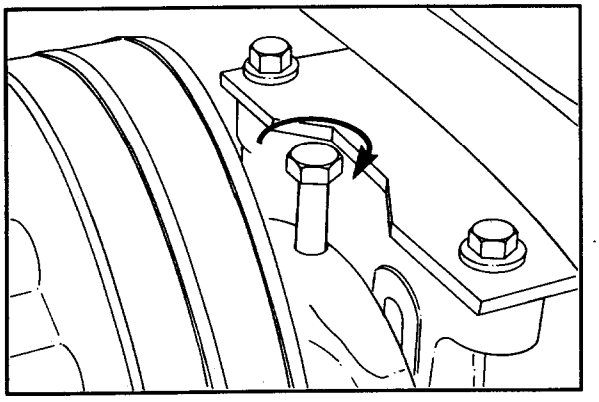

2. Turn the adjusting screw to increase the belt tension.

NOTE: Belt tension can increase when the capscrews are tightened. Do **not** adjust the belt tension to full value with the adjusting screw.

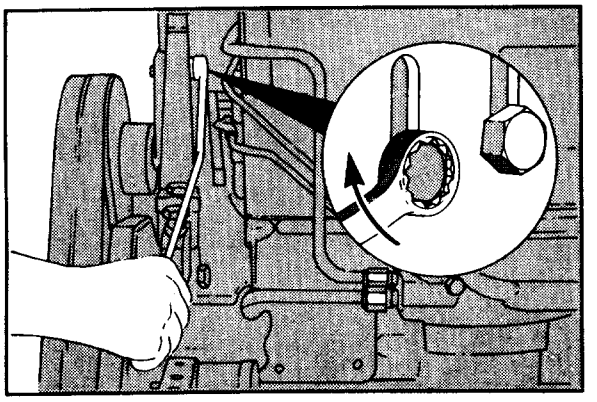

3. Tighten the four capscrews until the fan hub is in correct alignment with the fan hub bracket.

NOTE: Do **not** tighten the capscrews to full torque value.

4. Measure the belt tension.

5. To measure belt tension with a gauge, use the Belt Tension Chart to select the correct gauge for the belt width.

BELT TENSION (Pounds)			
Belt Width Inches	Belt Gauge	New Belt Tension Min.-Max.	*Used Belt Installation Tension Min.-Max.
.380	ST-1274	140-150	60-100
.440		140-150	60-100
1/2		140-150	60-100
11/16		160-170	60-100
3/4	ST-1138	160-170	60-100
7/8		160-170	60-100
5 or 6 Rib	ST-1293	150-160	70-120
8 Rib	ST-1293	190-210	155-165

*Adjust used belts to the values in this column. If below minimum, re-tension to maximum.

NOTE: A belt is considered used if it has been in operation for at least 10 minutes.

6. Tighten the four capscrews to 110 N•m [80 ft-lbs] torque.
7. Measure the belt tension again.

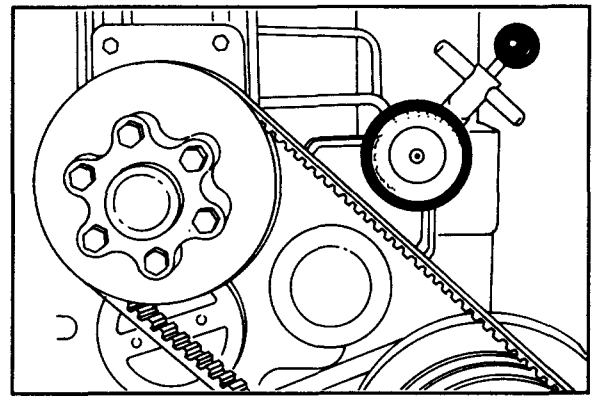

8. Loosen the adjusting screw 1/2-turn to prevent breakage.

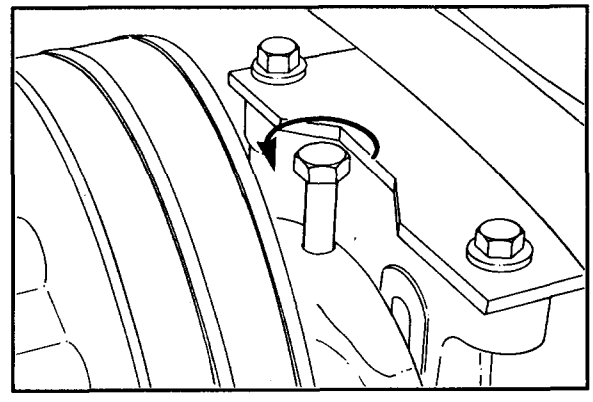

On-Off Fan Clutch - Check (1-21)

1. Install a master temperature gauge which is known to be accurate in the front upper water manifold. A thermocouple may be used.

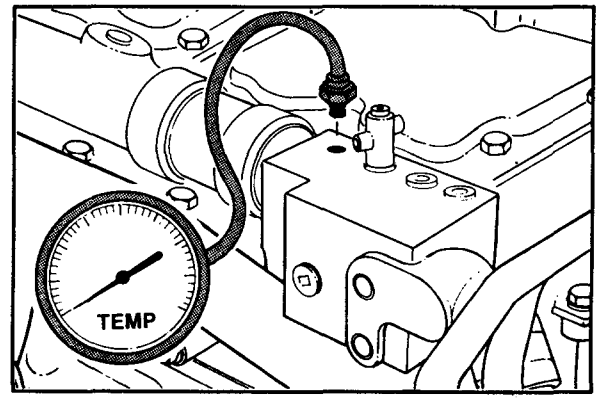

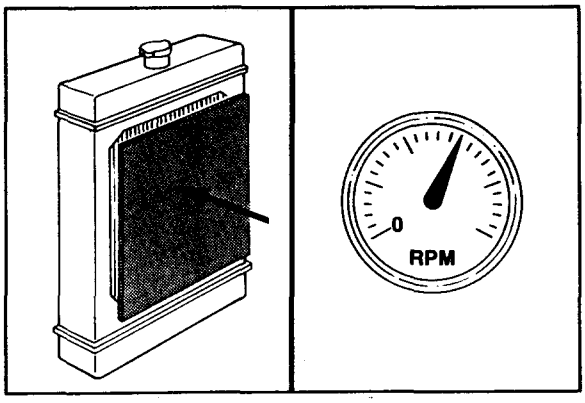

2. Restrict the radiator air flow.
3. Operate the engine at rated RPM.

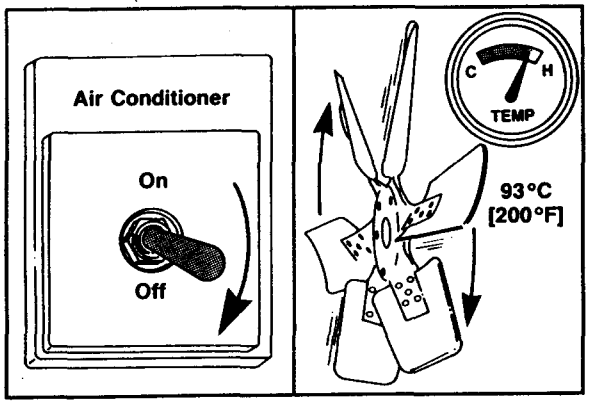

4. If the vehicle is air-conditioned, make sure the air-conditioning is turned off to prevent continuous operation of the fan. When the coolant temperature reaches 93°C [200°F], check for fan engagement.

NOTE: Fan noise and air flow increase when the fan clutch engages.

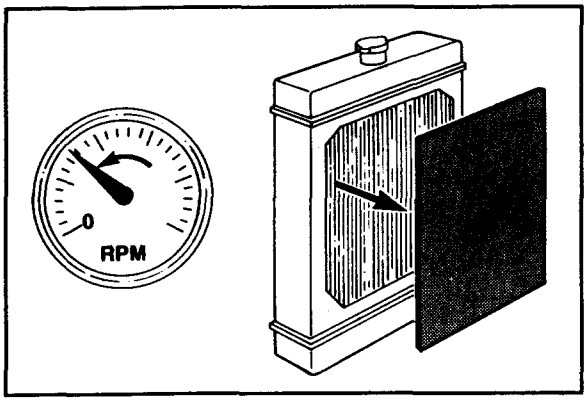

5. Return the engine to idle, and remove the radiator air restriction.

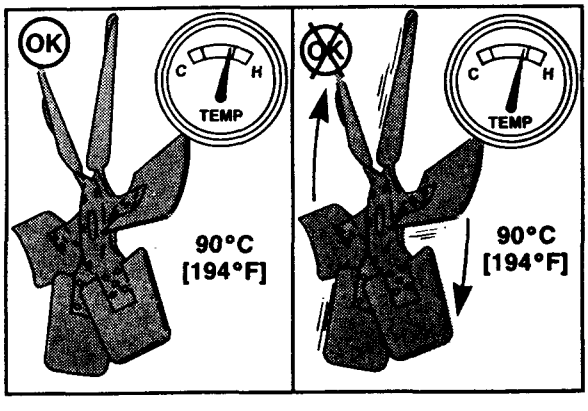

6. The fan clutch **must** disengage before the coolant temperature drops to 90°C [194°F]. Cummins Engine Company, Inc. recommends the fan disengage at 3°C [6°F] below the temperature stamped on the fan temperature sensor.

Fan Clutch, Air Engaged Type - (1-22)

1. This type of fan clutch is engaged by air pressure and is disengaged by spring tension.
2. Air pressure of 620 to 830 kPa [90 to 120 psi] is required to override the clutch spring tension to engage the fan.

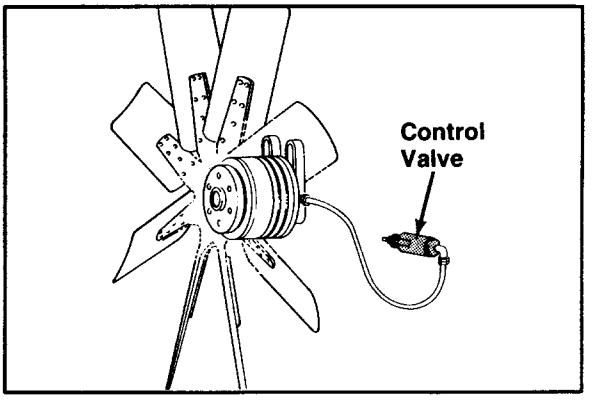

3. If the fan does **not** operate within the temperature range indicated in Procedure 1-21, the fan clutch and the controls **must** be checked. Refer to the fan clutch manufacturer's service manual.

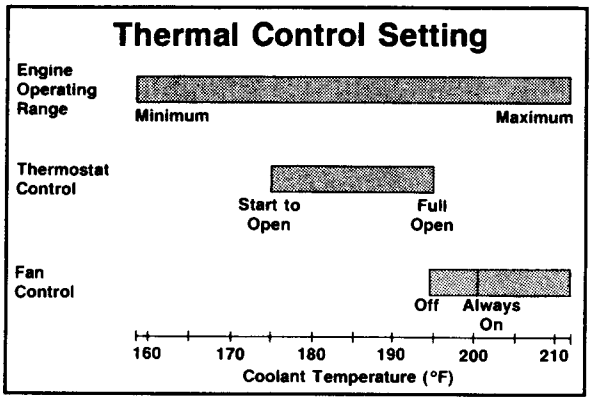

Fan Clutch, Air Disengaged Type - (1-23)

1. This type of fan clutch is engaged by spring tension and is disengaged by air pressure.

NOTE: This type of fan clutch requires air pressure for free rotation. In the event of air pressure loss, the fan will be engaged.

2. Air pressure of 480 to 830 kPa [70 to 120 psi] is required to override the clutch spring tension to disengage the fan.

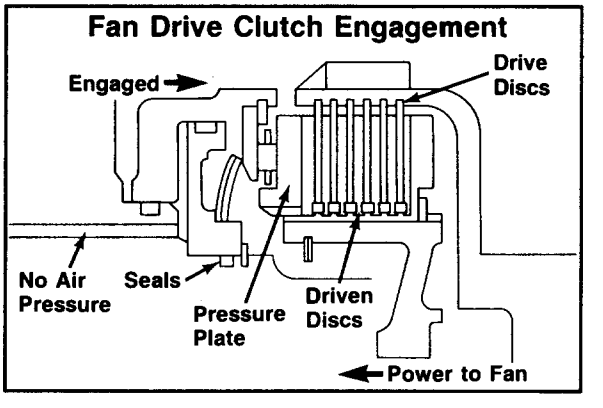

3. If the fan does **not** operate within the temperature range indicated in Procedure 1-21, the fan clutch and the controls **must** be checked. Refer to the fan clutch manufacturer's service manual.

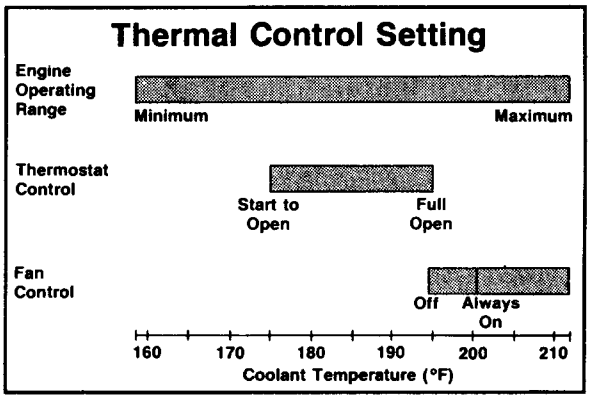

On-Off Fan Clutch - Replace (1-24)

Remove

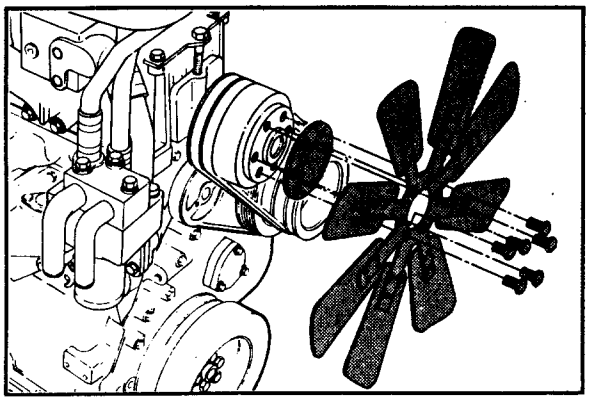

1. Remove the fan.

NOTE: Do **not** discard the fan spacers. The spacers provide the thickness needed to install the fan in the correct position.

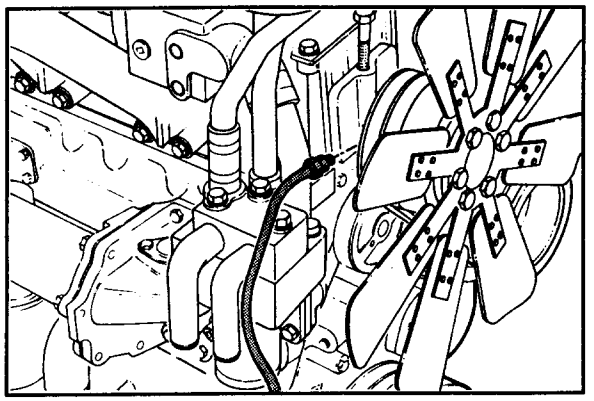

2. Disconnect the signal line.

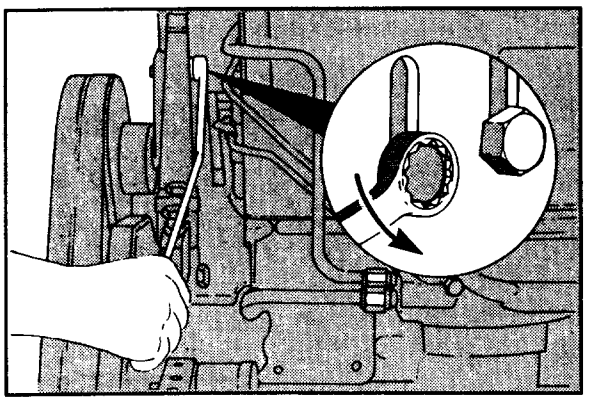

3. Loosen the capscrews which attach the fan hub to the bracket.

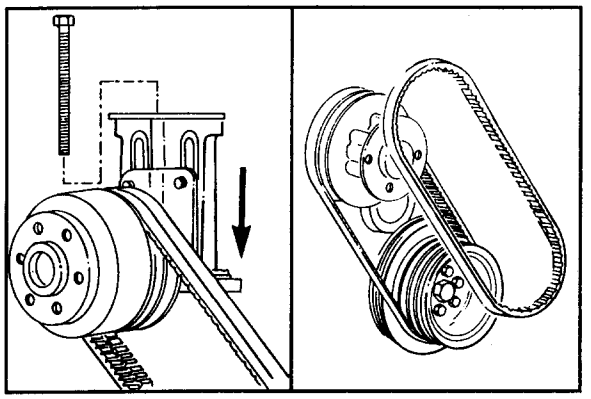

4. Remove the fan hub adjusting capscrew, and remove the fan belts.

5. Loosen the fan hub capscrews, and remove the fan hub.

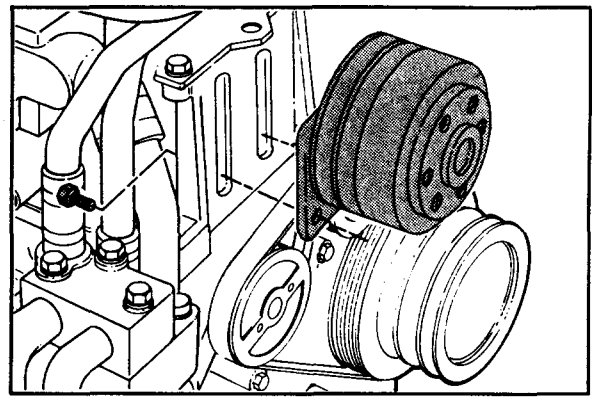

Install

1. Install the fan hub assembly on the fan hub bracket. The capscrews **must not** be tightened.

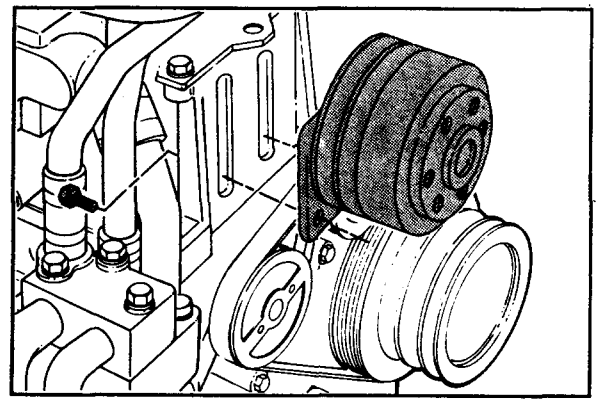

2. Install the fan drive belts on the fan hub and the accessory drive pulley. Do **not** tighten the belts.

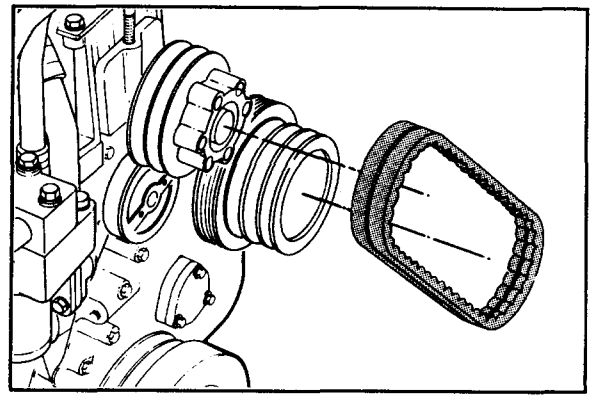

3. Install the fan.

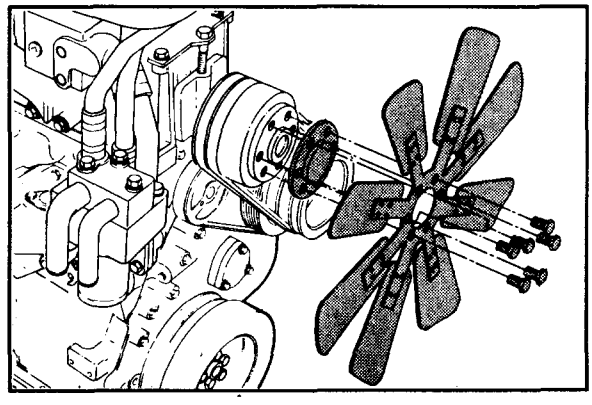

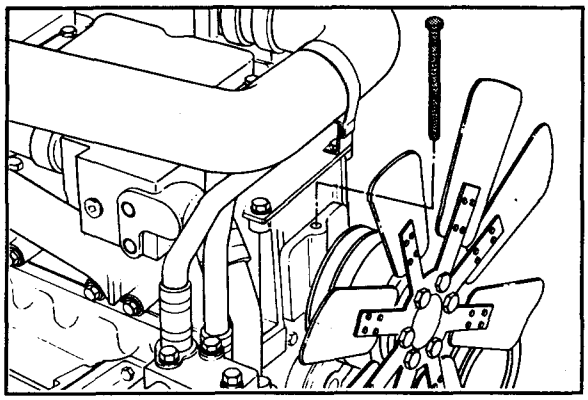

4. Install the fan hub adjusting screw.

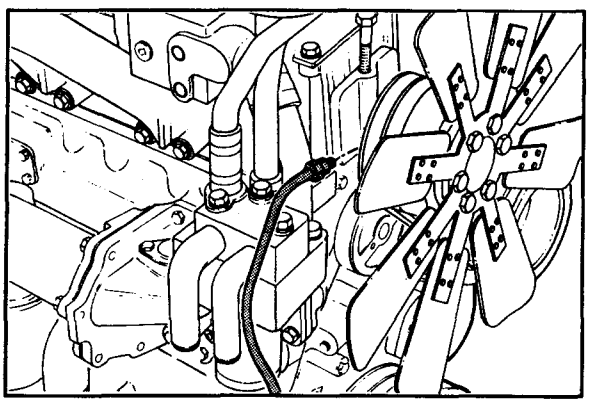

5. Install the fan hub signal line. Tighten the fan belts per Procedure 1-20.

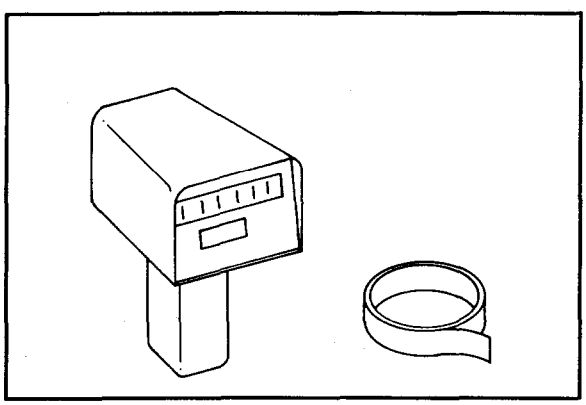

Fan Clutch, Viscous-Type - (1-25)

Check

1. Use a fan RPM measuring device to check the operation of the viscous fan hub. A strobe or Part No. 3377462 Cummins Optical Tachometer may be used.

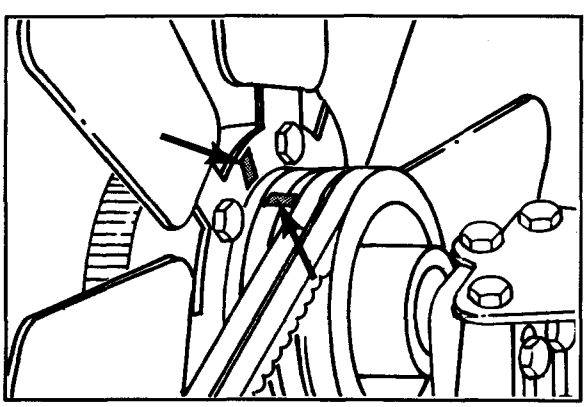

2. Mark a spot on the fan hub pulley and one fan blade so the measuring device can determine the pulley and the fan speed. Reflective tape, Part No. 3377464, in Part No. 3377462 Cummins Optical Tachometer, can be used to mark the fan blade and the pulley. (Refer to Service Tools Instruction, Bulletin No. 3377544, for more information.)

3. While the engine is still warm and the vehicle is shut off, cover the radiator grill.
4. Leave a hole approximately 0.3 m [1 foot] in diameter in the cardboard to allow some air flow to the viscous fan hub.

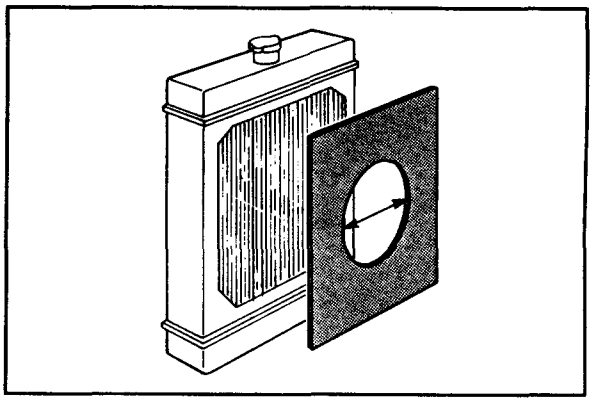

5. Start the engine. Idle the engine for 3 to 5 minutes. Lock the throttle in a "HIGH IDLE" position.

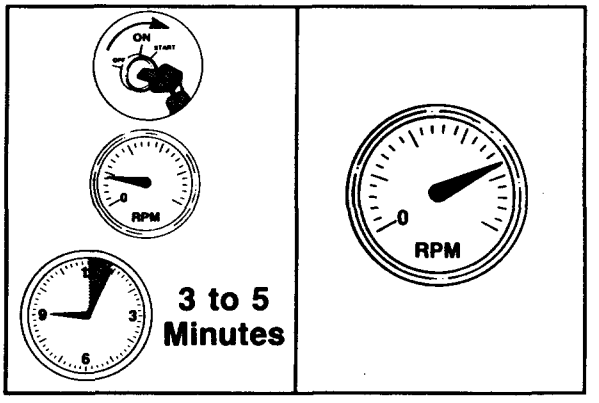

Warning: The fan will engage when the engine is started. To avoid personal injury, do not put your hands in the path of the rotating fan.

Caution: Do not exceed 100°C [212°F] coolant temperature. Coolant temperatures above 100°C [212°F] can damage the engine.

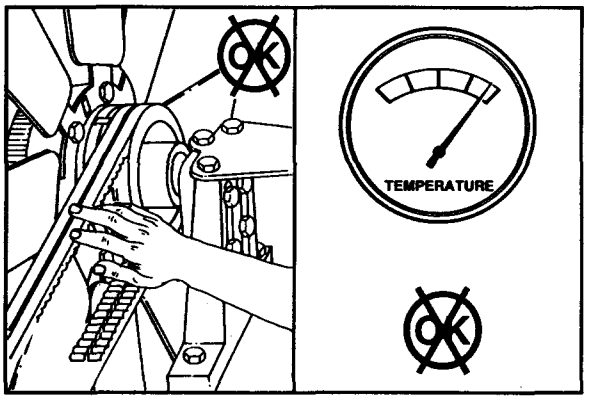

6. When the coolant temperature reaches 90°C [195°F], measured fan speed **must** reach a minimum of 85 percent of the pulley speed.
7. Input speed is the engine RPM times the fan hub ratio. For example, a 2100 RPM engine times a 1.1:1 fan hub ratio would give a 2310 RPM input speed (2100 X 1.1 = 2310). Eighty-five (85) percent of the input speed in the example is 1963 fan RPM (.85 X 2310 = 1963).

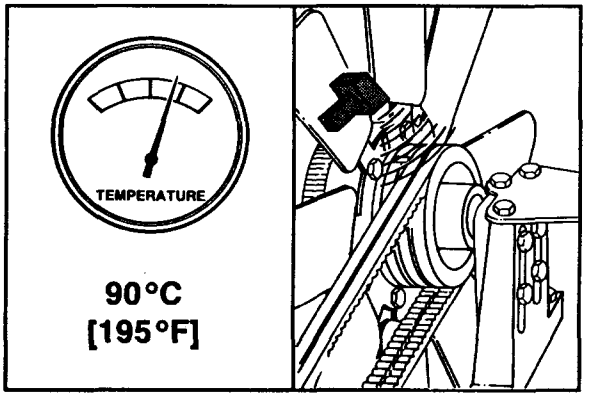

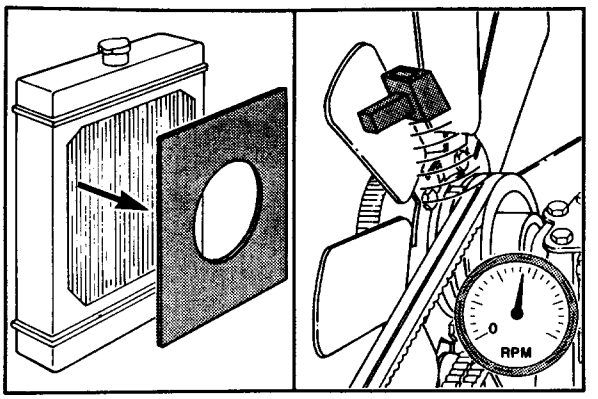

8. While the engine is still at high idle, remove the radiator grill cover. The fan speed **must** begin to decrease after one (1) minute and eventually drop to a maximum of 50 percent of the input speed.
9. If the viscous fan hub fails this test, have it checked by an authorized fan hub dealer for repair or replacement.

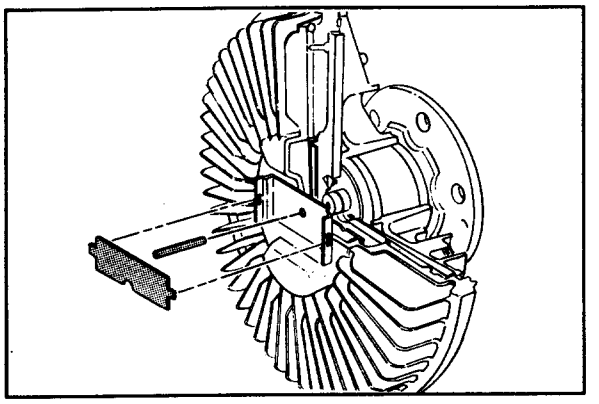

10. If a fan speed measuring device is **not** available and the complaint is overheating, remove the viscous fan hub bimetal strip and the control pin. This will cause the fan hub to operate all the time.

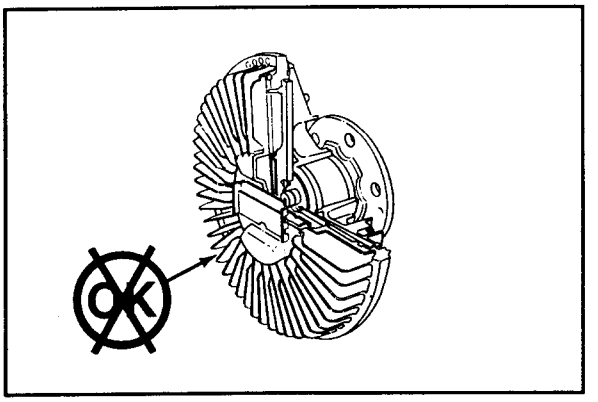

11. If the overheating complaint does **not** occur with the control pin removed, install the control pin and take the fan hub to an authorized fan hub dealer for repair or replacement.

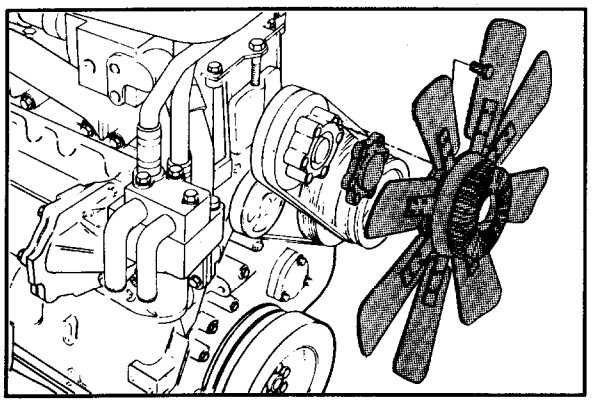

Remove

1. Loosen and remove the capscrews or the hexagon nuts which hold the viscous fan clutch to the fan hub.

NOTE: Do not discard the fan spacers. The spacers provide the thickness needed to install the fan in the correct position.

2. Carefully remove the fan and clutch assembly from the fan shroud, and put it on a workbench with the pin side up.
3. Remove the capscrews or the hexagon nuts which hold the fan to the clutch.

NOTE: If the control pin is removed, the control pin side of the assembly **must** be up to prevent fluid loss which will result in incorrect operation.

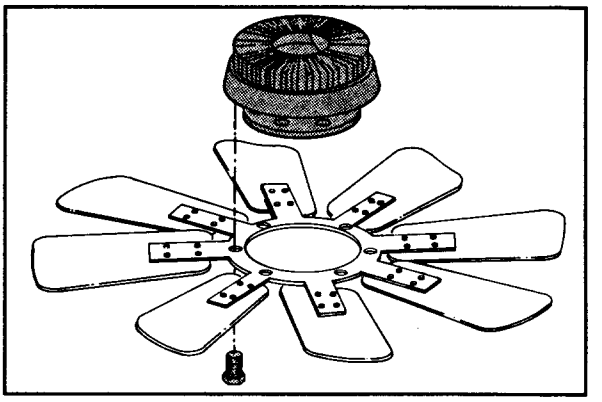

Install

1. Install the fan on the viscous fan clutch. Install the capscrews or the hexagon nuts which hold the fan to the clutch.

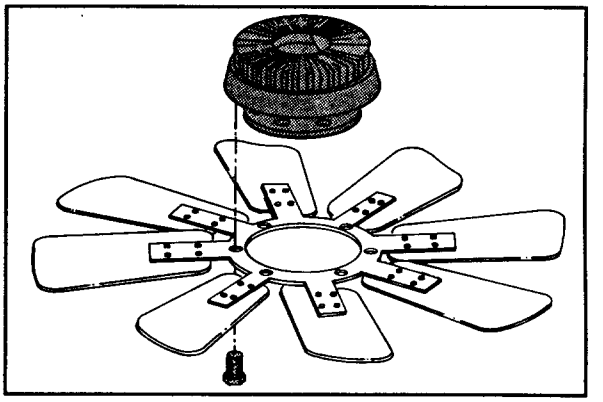

2. Carefully install the fan and clutch assembly in the fan shroud.

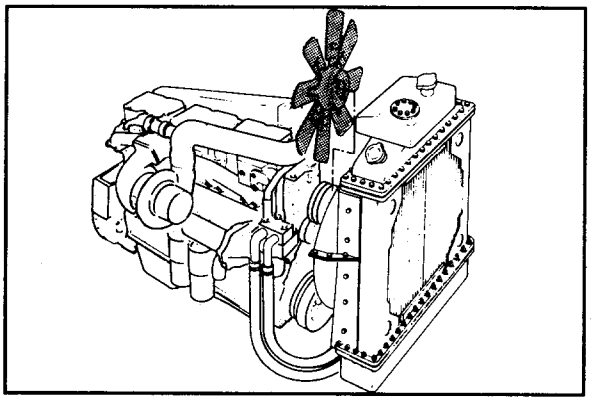

3. Make sure the correct number of spacers are still on the fan hub.
4. Tighten the 3/8-inch capscrews or hexagon nuts to 45 N•m [35 ft-lbs] torque.

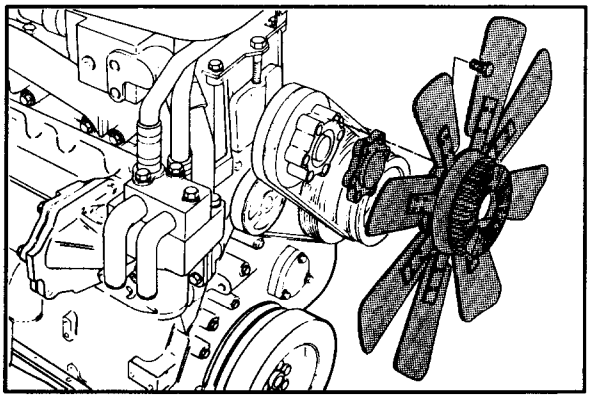

Fan Hub - Replace (1-26)

Inspect

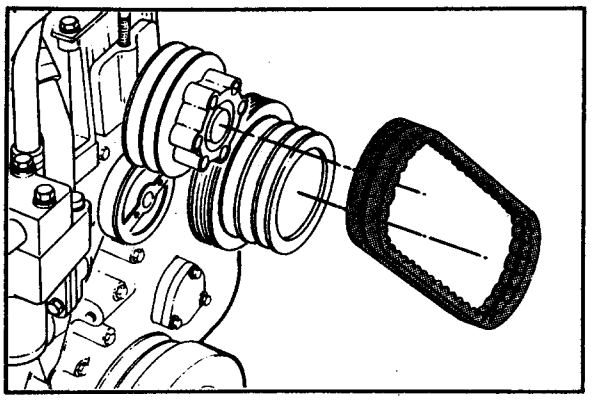

1. Remove the fan drive belts. Refer to Procedure 1-20.

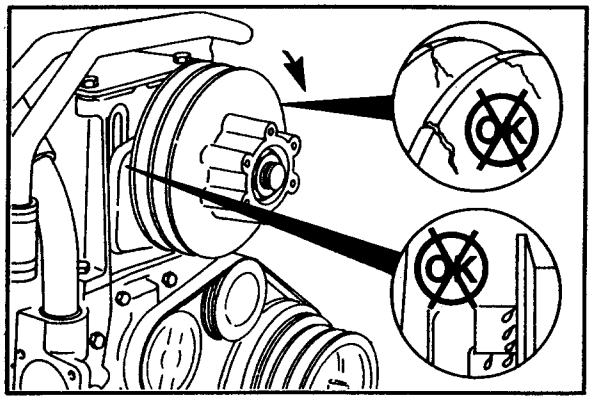

2. Inspect the fan hub for the following:
   - Freedom of rotation.
   - Cracks.
   - Grease seal leakage.
3. Repair or replace the fan hub if the fan hub does **not** rotate freely or if there is evidence of cracks or grease seal breakage.

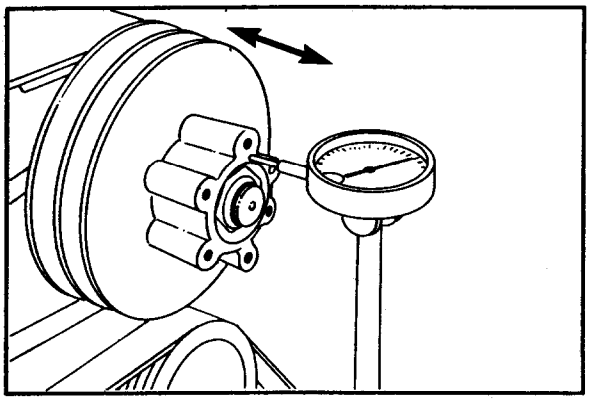

4. Measure the fan hub end clearance. The end clearance **must** be 0.08 mm to 0.25 mm [0.003-inch to 0.010-inch].
5. Replace the fan hub if the end clearance is **not** within these specifications.

Remove

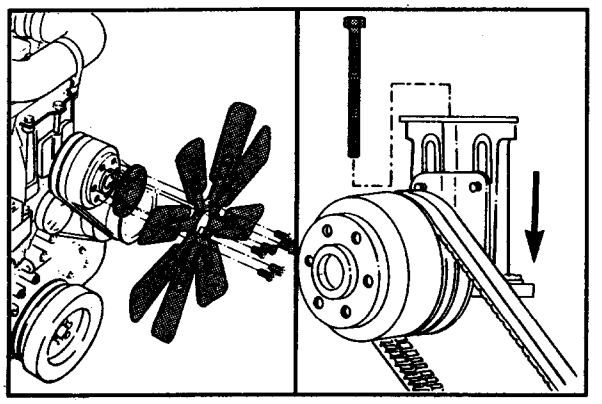

1. Remove the fan.

NOTE: Do **not** discard the fan spacers. The spacers provide the thickness needed to install the fan in the correct position.

2. Turn the adjusting screw **counterclockwise** to release tension. Remove the adjusting screw, and remove the belts. Refer to Procedure 1-20.

3. Remove the four capscrews and the fan hub.

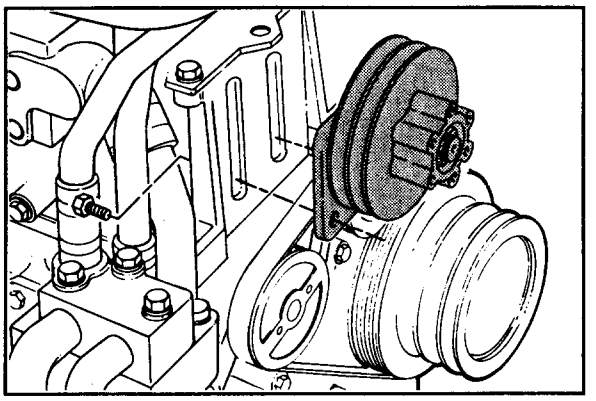

Install

1. Install the new fan hub and the four capscrews.
2. Use your fingers to tighten the capscrews.

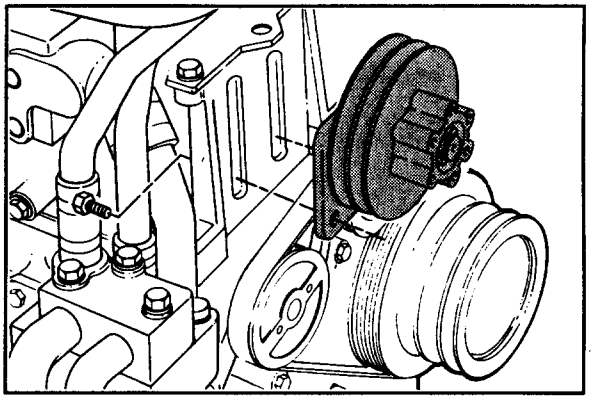

3. Install the fan drive belts on the fan hub and the accessory drive pulley. Do **not** tighten the belts.

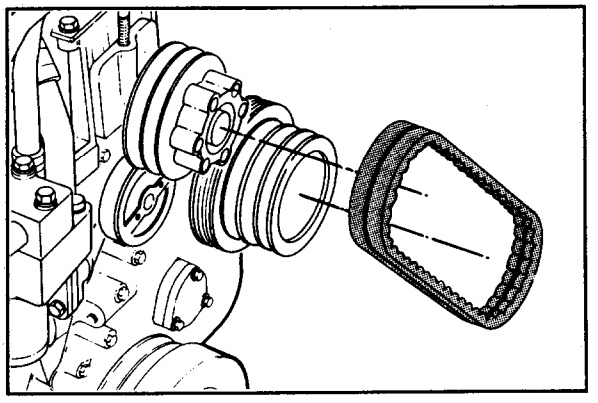

4. Install the fan.
5. Adjust and tighten the fan drive belts. Refer to Procedure 1-20.

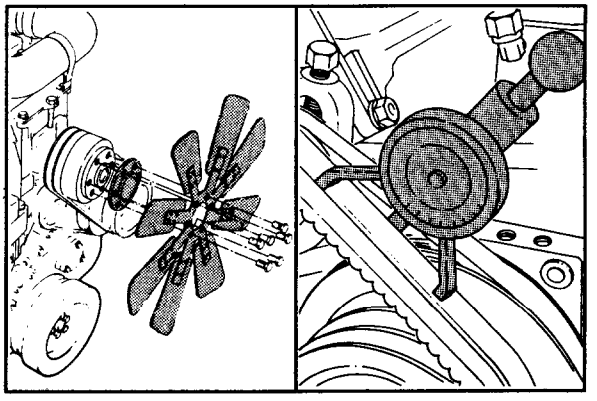

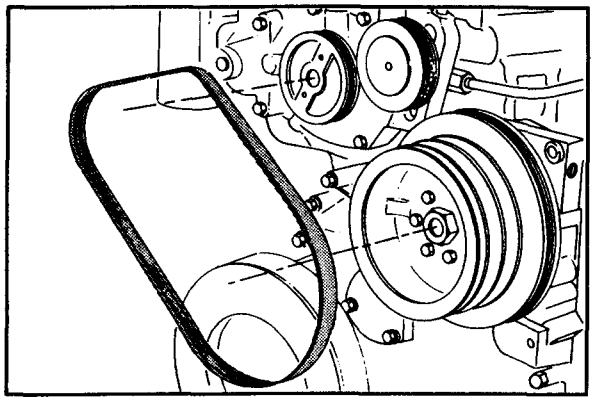

Idler Pulley Assembly, Water Pump - Replace (1-27)

Inspect

1. Remove the water pump drive belt. Refer to Procedure 1-19.

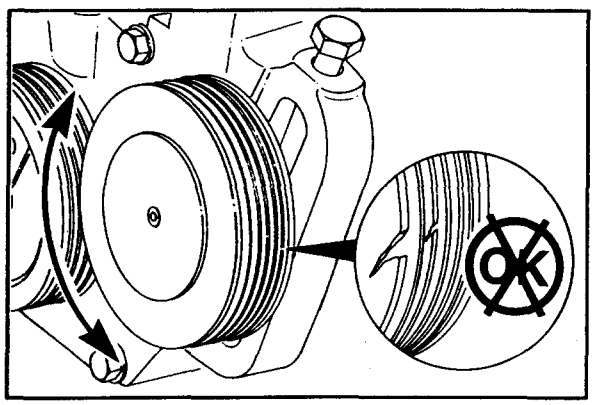

2. Visually inspect the idler pulley assembly for the following:
   - Freedom of rotation.
   - Cracked, chipped, or broken pulley grooves.
3. Repair or replace the idler pulley assembly if it does **not** rotate freely or if damage is found.

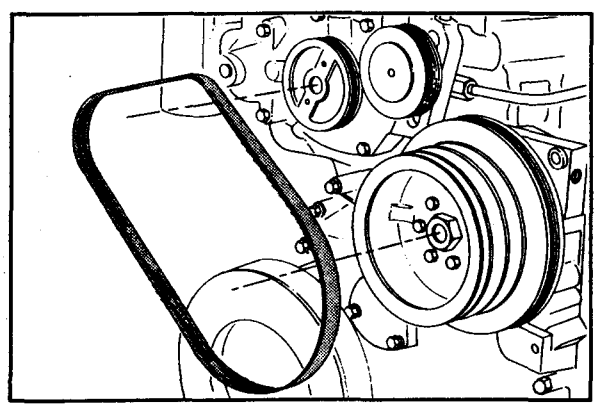

4. If no damage is found, install the water pump belt. Refer to Procedure 1-19.

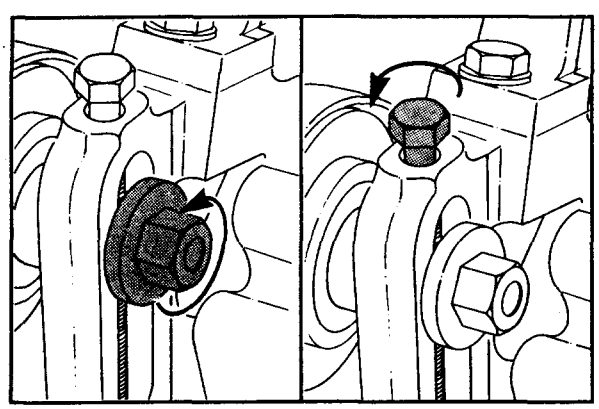

Remove

1. Loosen the idler pulley shaft lock nut.
2. Turn the adjusting screw **counterclockwise** to release tension, and remove the belt.

3. Remove the lock nut and the washer from the back of the idler pulley shaft.
4. Remove the adjusting screw.
5. Remove the idler pulley from the water pump body.

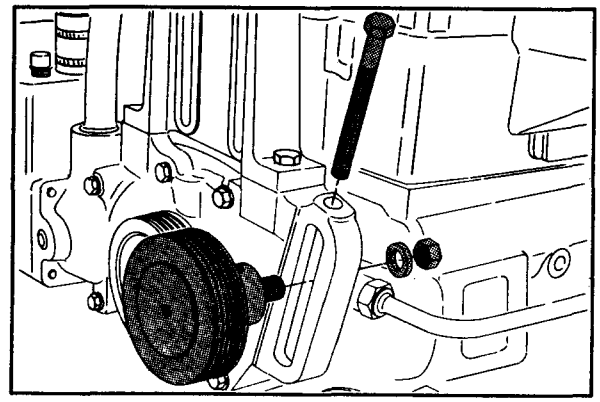

Install

1. Install the new idler pulley in the water pump body.
2. Install the washer and the lock nut on the back of the idler pulley shaft.

NOTE: Do not tighten the lock nut until the water pump drive belt has been installed and adjusted.

3. Install the adjusting screw in the idler pulley shaft.

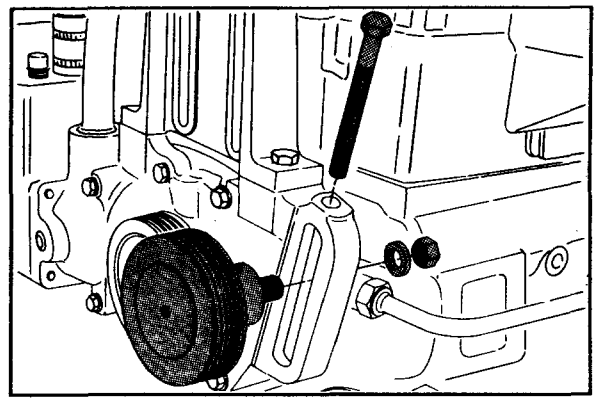

4. Install and adjust the water pump belt. Refer to Procedure 1-19.

NOTE: Belt tension can increase when the lock nut is tightened. Do not adjust belt tension to full value with the adjusting screw.

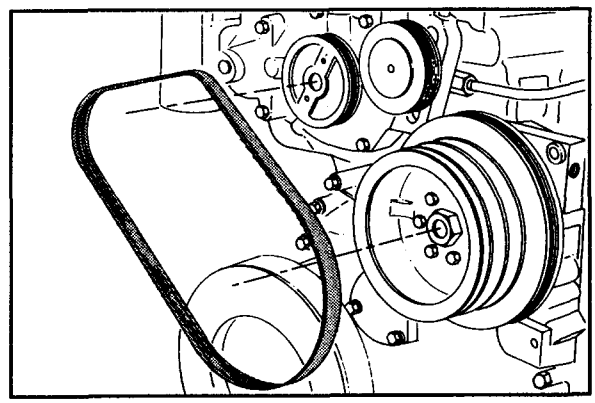

Water Pump - Replace (1-28)

Remove

1. Drain the cooling system. Refer to Procedure 1-06.

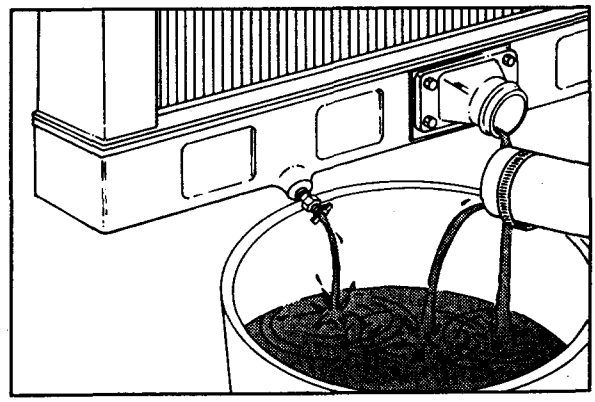

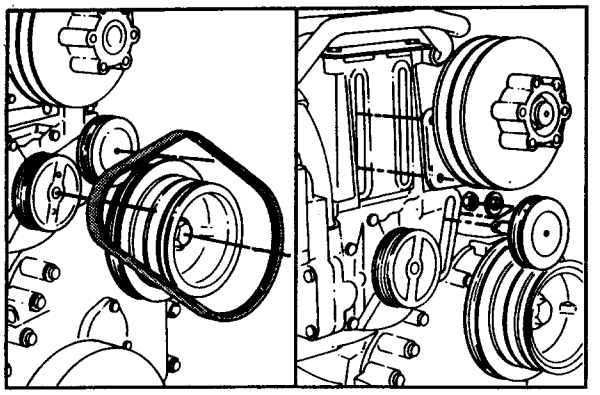

2. Remove the water pump belt. Refer to Procedure 1-19.
3. Remove the fan hub and the water pump idler pulley assembly. Refer to Procedures 1-26 and 1-27, respectively.

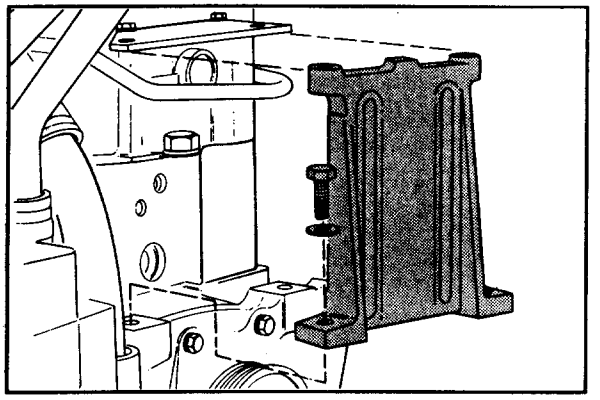

4. Remove the fan hub support bracket.

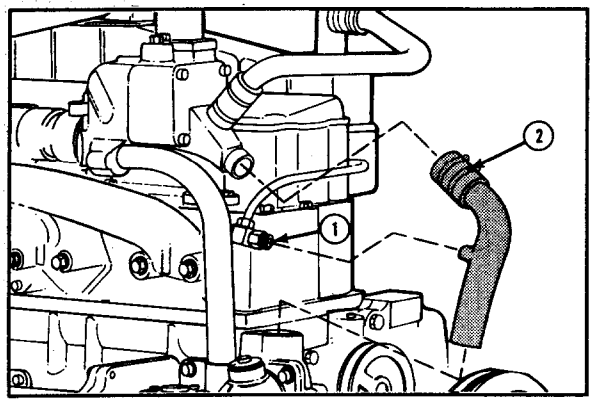

5. Remove the air compressor coolant outlet tube (1).
6. Remove the coolant filter coolant outlet tube if connected to the water pump.
7. Remove the thermostat bypass tube (2).

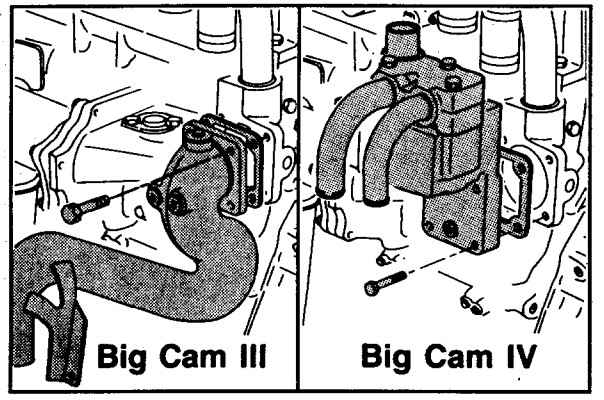

8. Remove the coolant inlet transfer connection from the water pump (Big Cam III).

NOTE: On Big Cam IV series engines, a thermostat housing is used in place of the coolant inlet transfer connection.

9. Remove the thermostat housing from the water pump. Refer to Procedure 1-35.

10. Remove the six mounting capscrews from the water pump.
11. Remove the water pump from the engine.

NOTE: The water pump **must** be removed carefully to prevent damage to the impeller.

12. Clean the water pump gasket surface on the cylinder block.

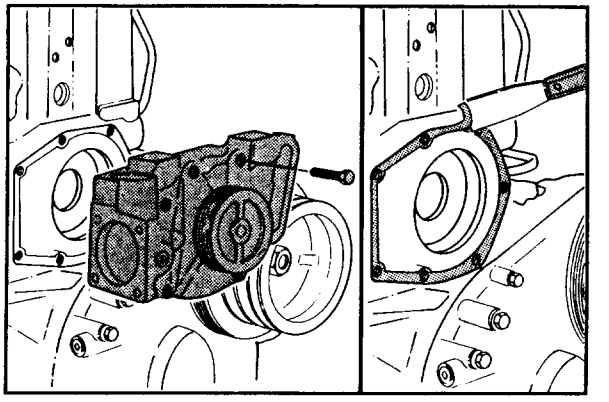

Install

1. Install two 3/8-24 X 3 guide pins in the water pump mounting capscrew holes.
2. Install a new gasket to the cylinder block, and install the water pump.
3. Tighten the capscrews to 45 N•m [35 ft-lbs] torque.

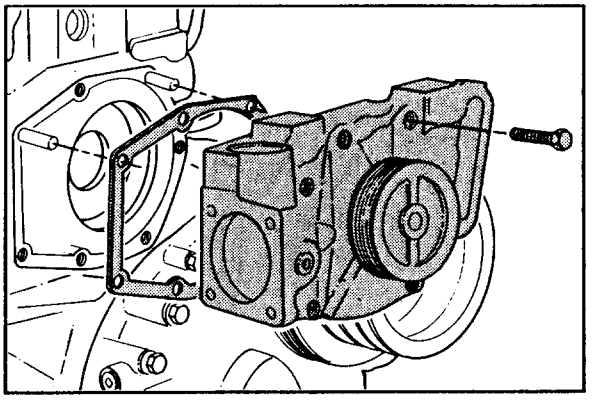

4. Tighten the capscrews in the sequence shown to the following torque values:
   - Tighten to 15 N•m [10 ft-lbs].
   - Tighten to 30 N•m [20 ft-lbs].
   - Tighten to 45 N•m [35 ft-lbs].

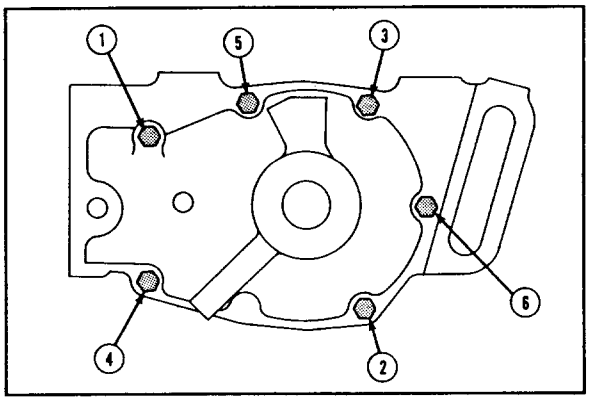

5. Install a new gasket. Install the coolant inlet transfer connection (Big Cam III) or the thermostat housing (Big Cam IV only) on the water pump.
6. Tighten the capscrews to 45 N•m [35 ft-lbs] torque.

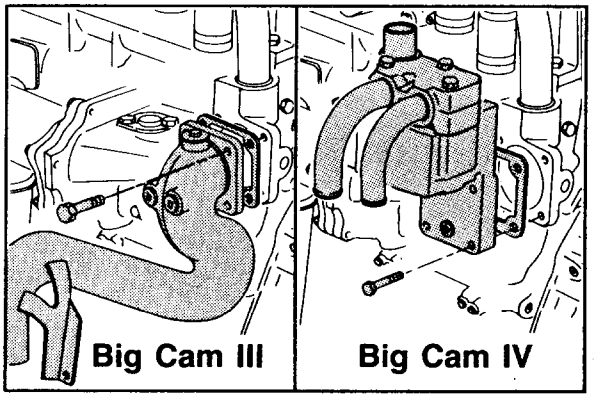

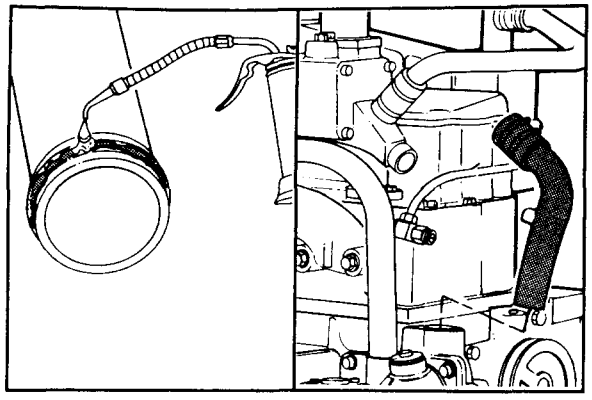

7. Inspect the O-ring on the coolant transfer tube. Replace if necessary.
8. Lubricate the O-ring with lubricating oil, and install the coolant transfer tube into the water pump.

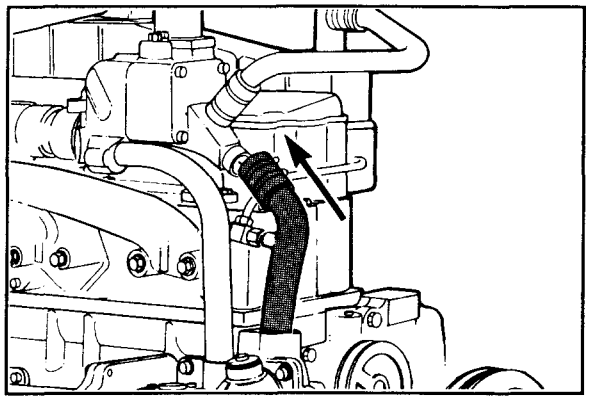

9. Install the hose on the coolant transfer tube, and tighten the clamps.
10. Install the air compressor coolant outlet tube.
11. Install the coolant filter coolant outlet tube (if previously connected to the water pump).

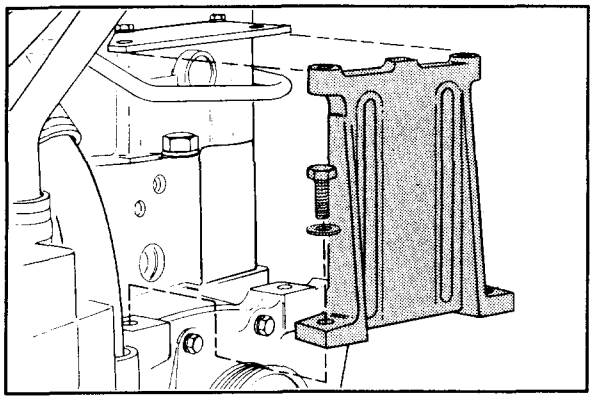

12. Install the fan hub support bracket to the water pump housing.
13. Tighten the bottom capscrews to 100 N•m [75 ft-lbs] torque.
14. Tighten the top capscrews to 100 N•m [75 ft-lbs] torque.

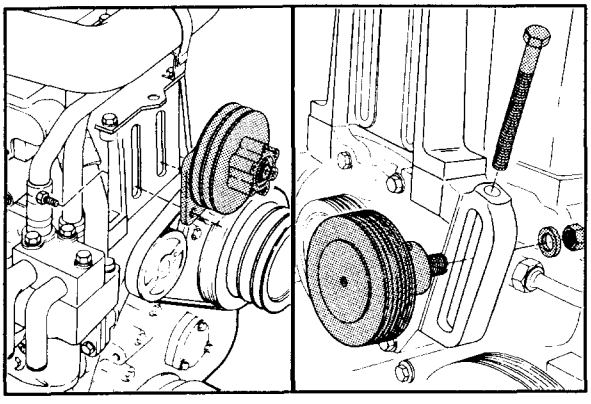

15. Install the fan hub and the water pump idler pulley assembly. Refer to Procedures 1-26 and 1-27, respectively.

16. Fill the engine with coolant. Refer to Procedure 1-07. Start the engine, and check for leaks.

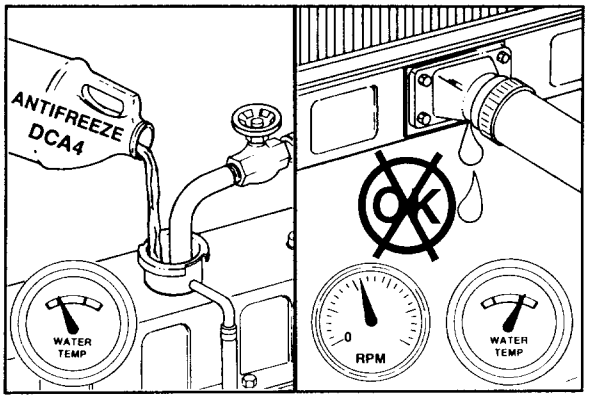

Thermostat (Big Cam III) - Test "Thermostat In Chassis" (1-29)

The engine thermostat and the thermostat seal **must** operate correctly for the engine to operate in the most efficient heat range. Overheating or overcooling will shorten engine life.

NOTE: Refer to Procedure 1-32 to inspect the thermostat seal.

Warning: Complete this test with the engine coolant temperature below 50°C [120°F]. Hot steam can cause serious personal injury.

1. Remove the upper radiator hose from the thermostat housing.

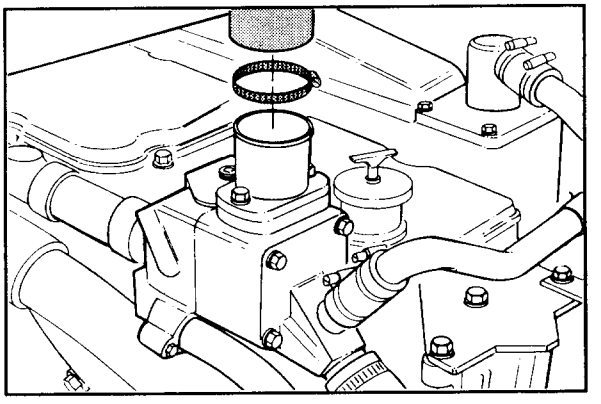

2. Install a hose of the same size on the thermostat housing outlet long enough to reach a remote dry container used to collect coolant.
3. Install and tighten a hose clamp on the housing outlet.
4. Install the end of the hose in a dry container.

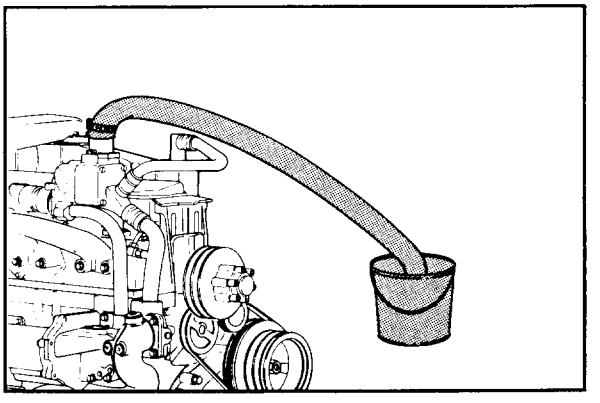

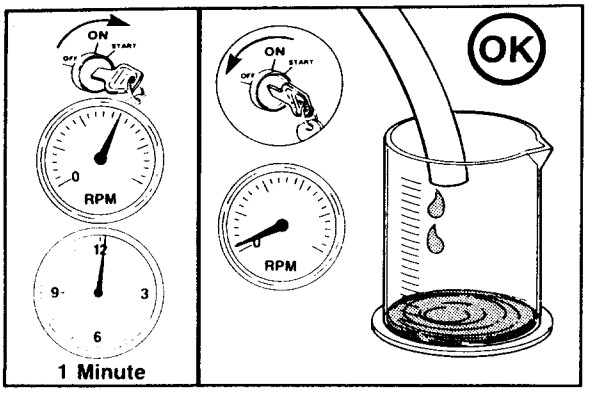

5. Operate the engine at rated RPM for one (1) minute.
6. Shut the engine off, and measure the amount of coolant collected in the container.
7. The amount of coolant collected **must not** be more than 100 cc [3.3 fluid ounces].

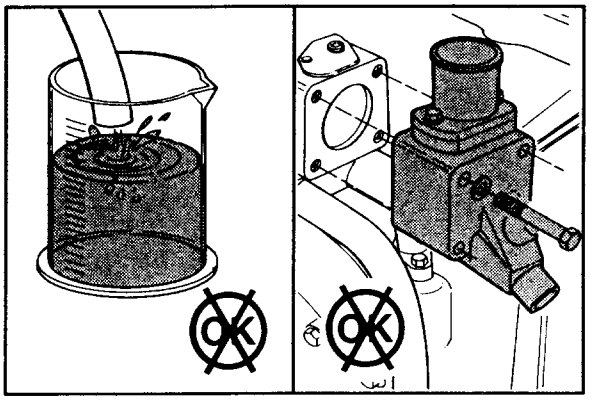

8. If more than 100 cc [3.3 fluid ounces] of coolant is collected, the thermostat or the thermostat seal is leaking.
9. Remove the thermostat and test operation as described in Procedure 1-31. Refer to Procedure 1-30 for thermostat removal and Procedure 1-32 for thermostat seal inspection.

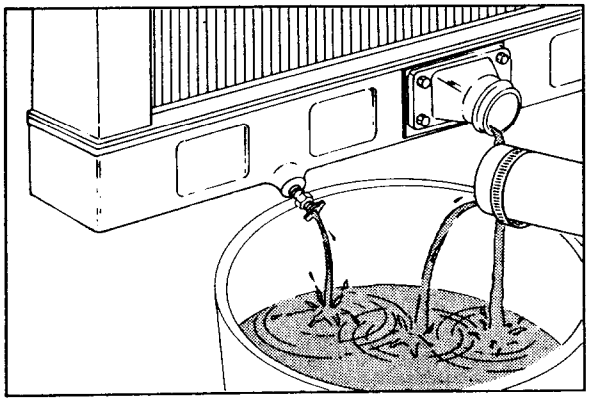

Thermostat (Big Cam III) - Replace (1-30)

Remove

1. Drain the cooling system. Refer to Procedure 1-06.

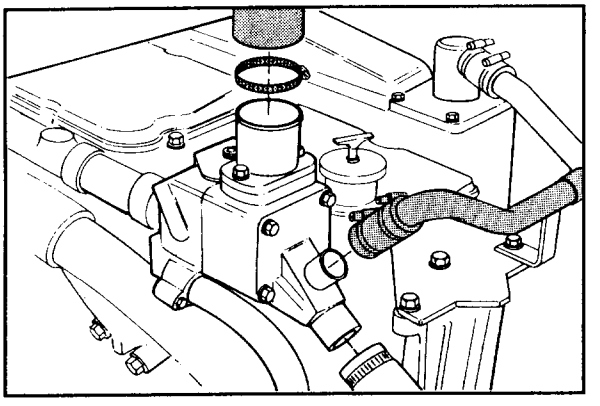

2. Remove the upper radiator hose and the aftercooler coolant return hose from the thermostat housing.
3. Loosen the hose clamps, and remove the coolant bypass tube and hose.

4. Remove the four thermostat housing mounting capscrews, and remove the thermostat housing.

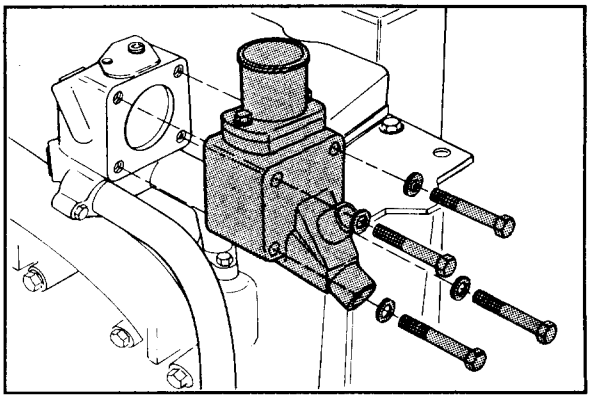

5. Remove the thermostat from the housing.
6. Inspect the thermostat seal (1) and the housing gasket surface (2). Refer to Procedure 1-32.

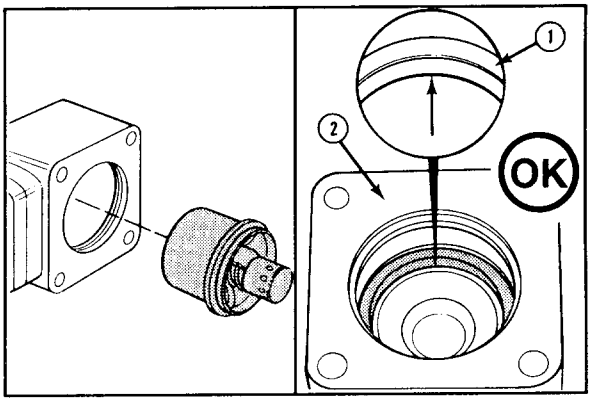

Install

1. Install the thermostat in the housing.
2. Install a new gasket on the thermostat housing.
3. Install the thermostat housing and four mounting capscrews.
4. Tighten the capscrews to 45 N•m [35 ft-lbs] torque.

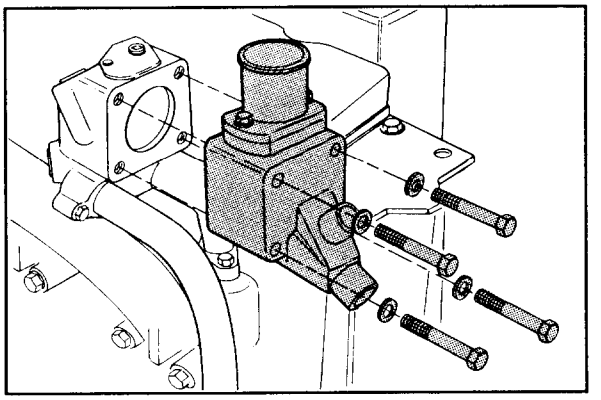

5. Install the upper radiator hose and the aftercooler coolant return hose to the thermostat housing.
6. Install the coolant bypass tube and the hose to the thermostat housing bypass outlet.
7. Tighten all hose clamps to 5 N•m [40 in-lbs] torque.

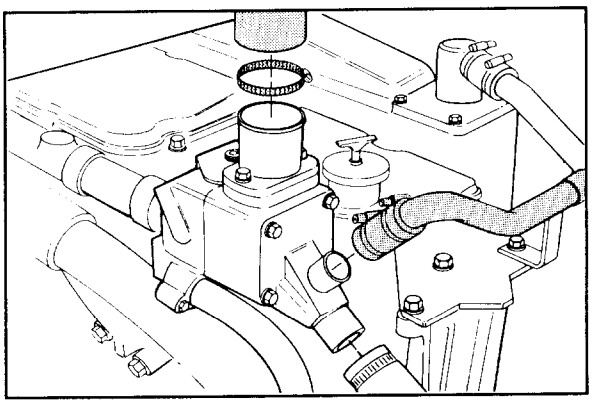

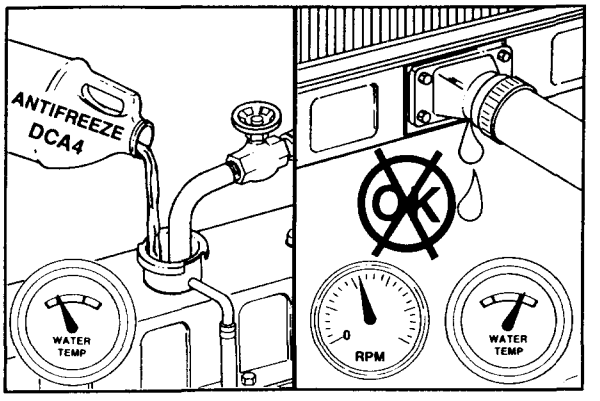

8. Fill the engine with coolant. Refer to Procedure 1-07. Start the engine, and check for leaks.

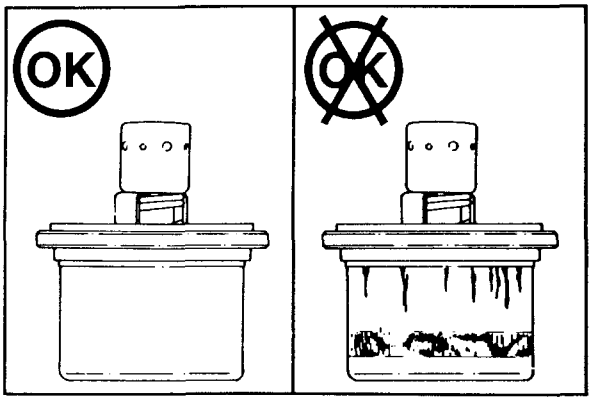

Thermostat (Big Cam III) - Test "Thermostat Removed" (1-31)

1. Remove the thermostat. Refer to Procedure 1-30.
2. Visually inspect the thermostat for damage.

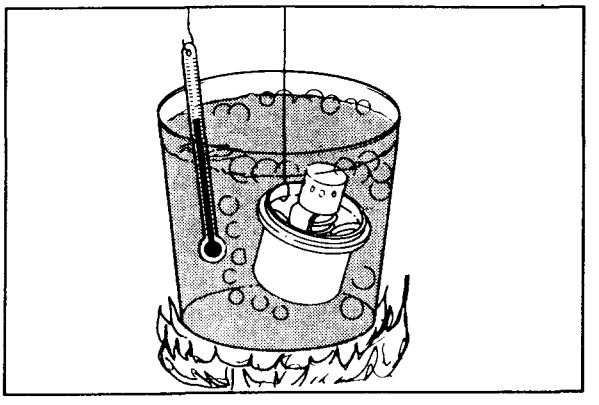

3. Suspend the thermostat and a 100°C [212°F] thermometer in a container of water. Do **not** allow the thermostat or the thermometer to touch the sides of the container.
4. Heat the water.

NOTE: Write down the temperatures at which the thermostat begins to open and when it is fully open.

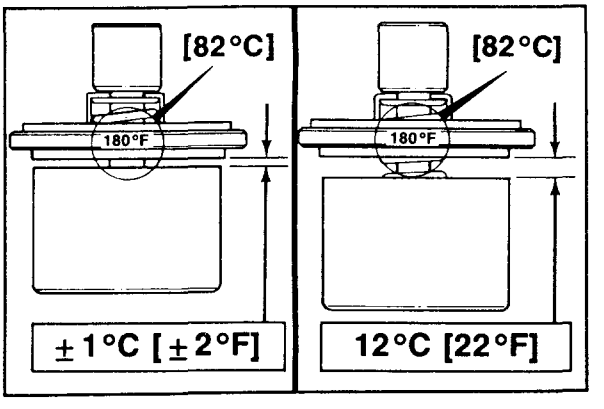

NOTE: The nominal operating temperature is stamped on the thermostat.

- The thermostat **must** begin to open within 1°C [2°F] of nominal temperature.
- The thermostat **must** be fully open to at least 9.5 mm [0.375-inch] within 12°C [22°F] of nominal temperature.

5. Replace the thermostat if it does **not** operate as described.

Thermostat Seal (Big Cam III) - Replace (1-32)

Inspect

1. Visually inspect the thermostat seal for cracks, corrosion, or other damage. Replace if necessary.

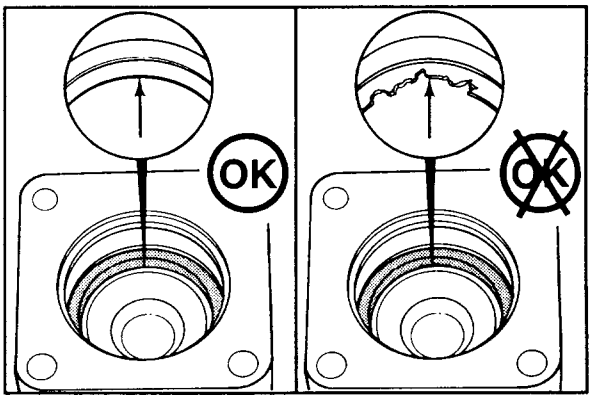

Remove

1. Use a punch and a hammer to remove the seal from the housing.

NOTE: Carefully remove the thermostat seal to avoid damaging the thermostat housing.

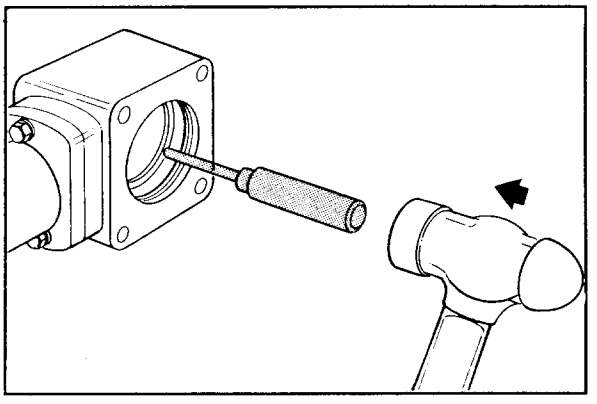

2. Clean and inspect the thermostat housing for cracks, pitting, or other damage.
3. Replace if damage is found.

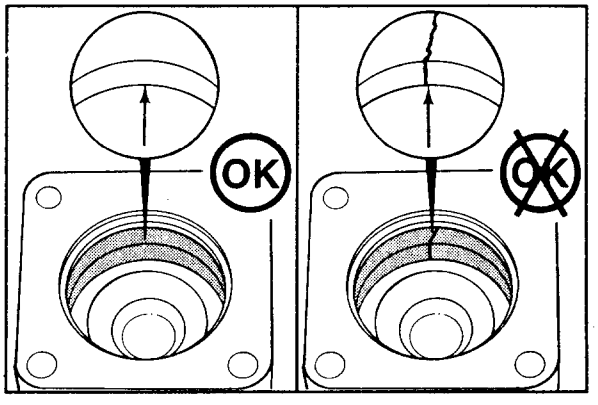

Install

Caution: When installing a new seal, the flat side of the seal must be toward the mandrel for correct installation.

1. Use Part No. ST-1225 Thermostat Seal Mandrel and a lead hammer to install the seal.

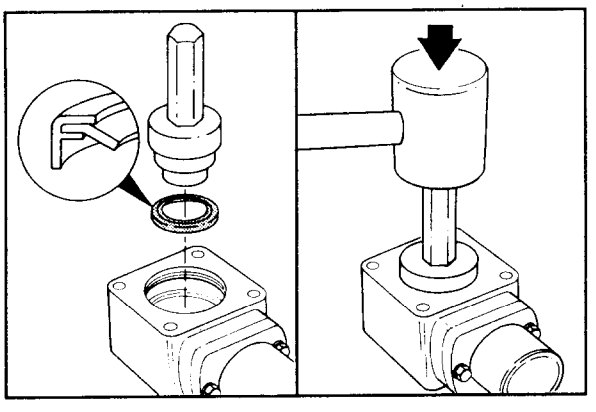

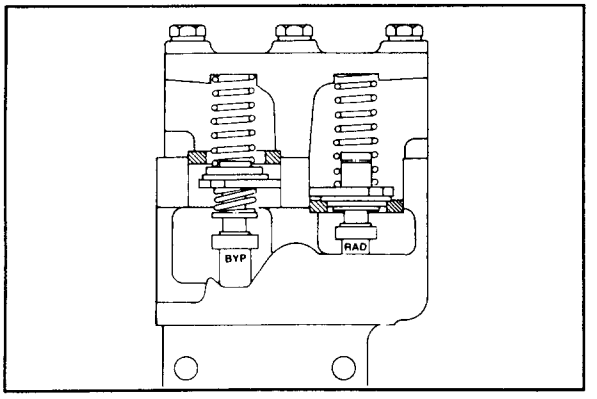

Thermostat, Radiator (Big Cam IV) - Check (1-33)

1. Due to the design of the thermostat and the thermostat housing on Big Cam IV engines, the thermostat operating temperature **must** be checked with the thermostat housing assembly installed on the engine.

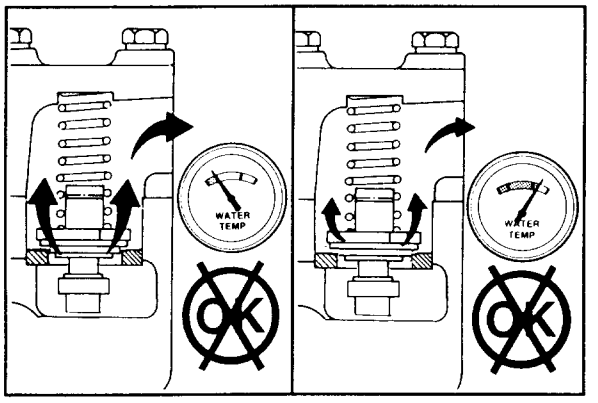

2. If the radiator thermostat is **not** seated correctly or if the thermostat seal is defective, this can cause coolant leakage to the radiator which will result in cold operating conditions. If the radiator thermostat does **not** open correctly, it will **not** allow correct coolant flow to the radiator which will result in the engine overheating.

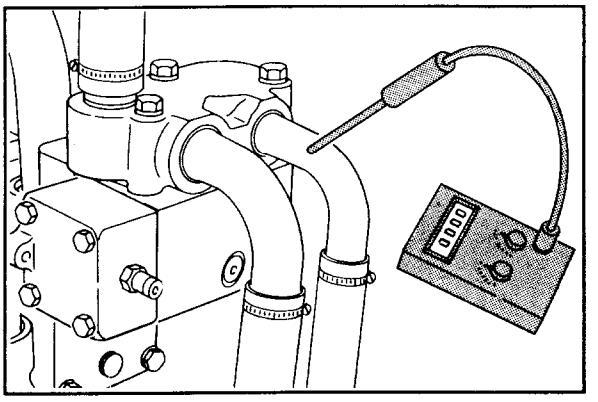

Caution: Touching the hot coolant outlet tube can cause personal injury.

3. Check the radiator thermostat by starting the engine and monitoring the temperature of the coolant outlet tube. Coolant temperature **must** be below 70°C [160°F].
4. A contact pyrometer is the recommended method to monitor the coolant outlet tube temperature. The tube will warm quickly to block temperature when the thermostat starts to open at 80°C [175°F].

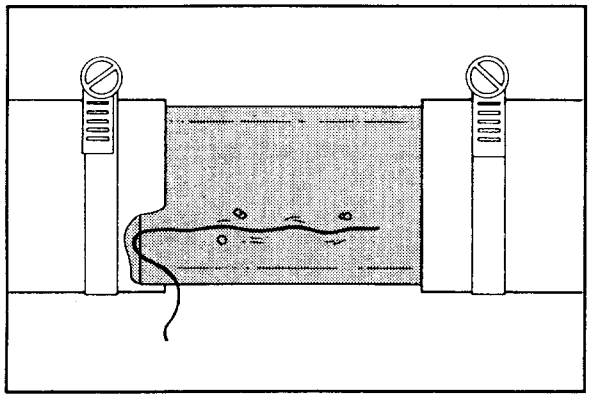

5. Another method is to install a sight glass in the engine coolant outlet tube. A small thread placed inside the sight glass will move due to the coolant flow when the thermostat opens.

6. Install a master temperature gauge which is known to be accurate in the front upper water manifold. A thermocouple may be used.
7. If the radiator thermostat does **not** open between 75°C to 80°C [170°F to 180°F], replace the thermostat. Refer to Procedure 1-36.

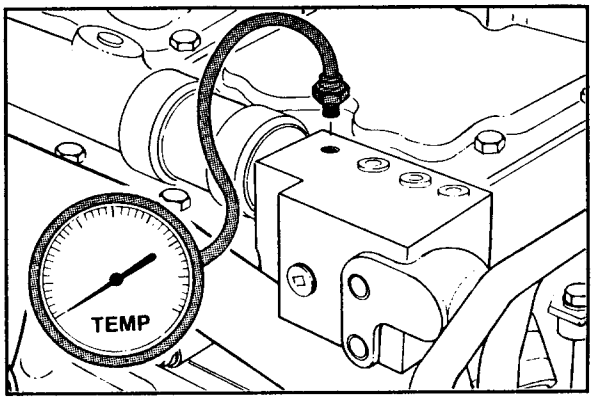

Thermostat, Bypass (Big Cam IV) - Check (1-34)

1. Due to the design of the thermostat and the thermostat housing on Big Cam IV engines, the thermostat operating temperature **must** be checked with the thermostat housing assembly installed on the engine.

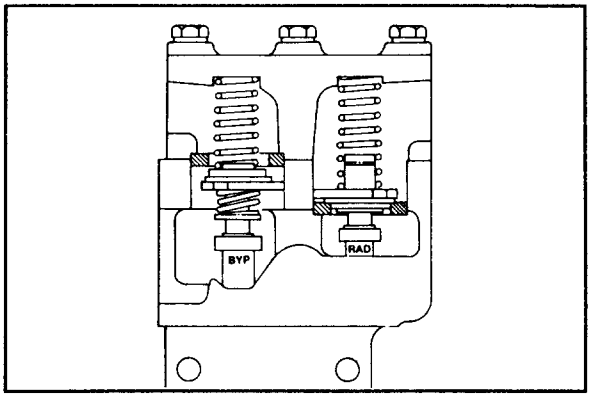

2. An engine can overheat if the bypass thermostat does **not** close correctly. The thermostat is fully open below 60°C [140°F] and is closed above 85°C [185°F].

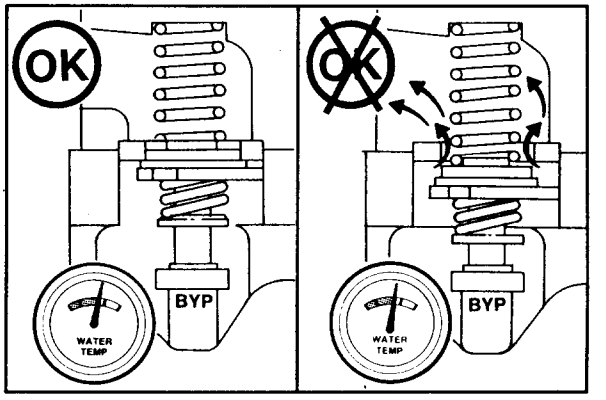

3. Drain the cooling system. Refer to Procedure 1-06.

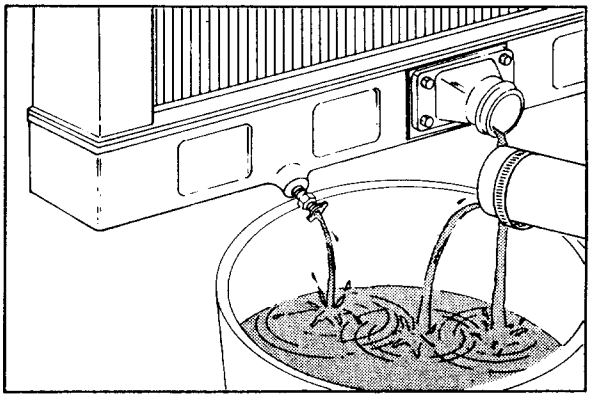

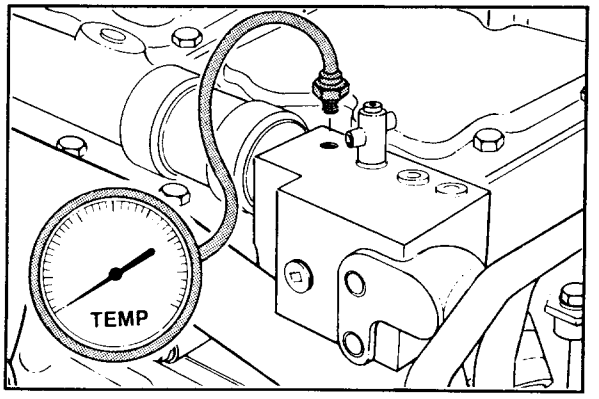

4. Install a master temperature gauge which is known to be accurate in the front upper water manifold. A thermocouple may be used.

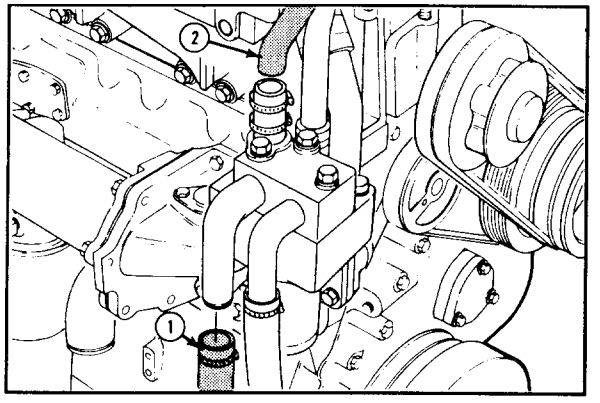

5. Remove the radiator return (1) (engine coolant inlet) tube and the aftercooler coolant inlet tube (2) from the thermostat housing connections.

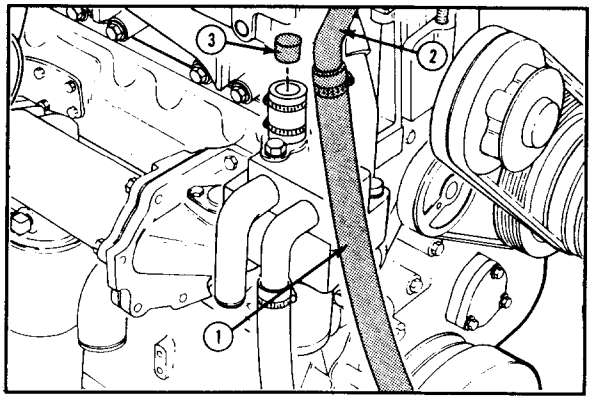

6. Test the bypass thermostat by connecting the radiator return (1) (engine coolant inlet) tube directly to the aftercooler coolant inlet tube (2).
7. Install a plug (3) in the connection at the thermostat housing outlet (aftercooler inlet).

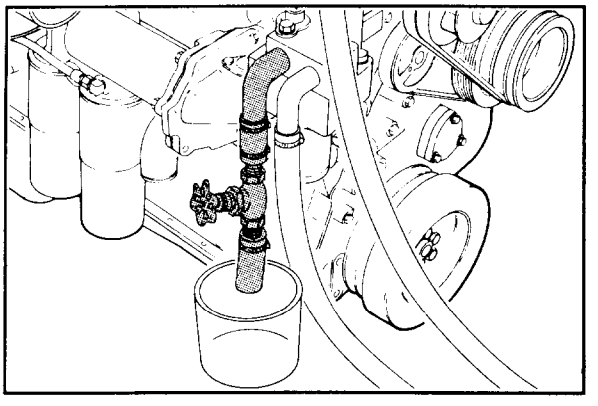

8. Connect a shutoff valve to the engine coolant inlet connection at the thermostat housing.
9. Connect one end of a hose to the shutoff valve, and place the other end of the hose into a container.

10. Close the shutoff valve. Fill the system with coolant. Refer to Procedure 1-07.

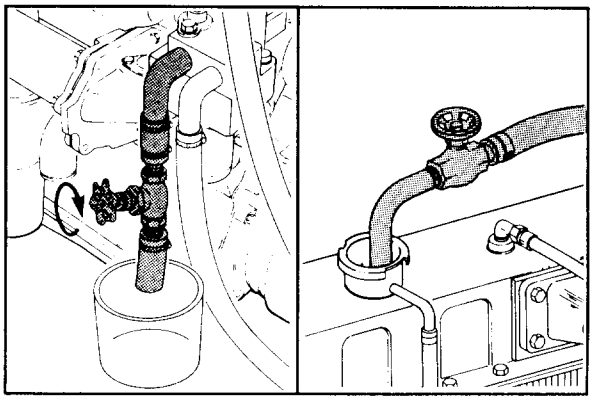

Warning: Hot coolant can cause personal injury.

11. Start the engine. Idle the engine, and open the shutoff valve. If the bypass thermostat is operating correctly, coolant will flow from the hose.

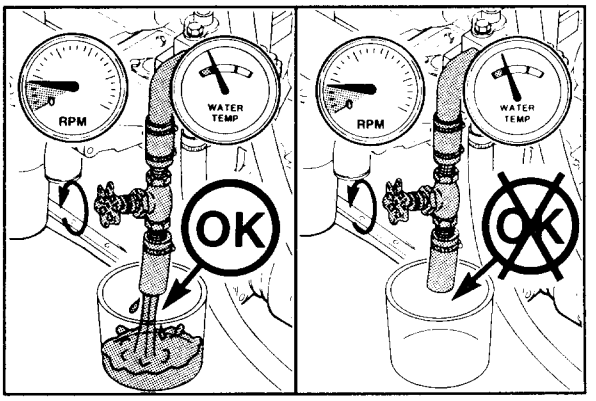

12. There **must** be coolant flow when the engine coolant temperature is below 75°C [170°F]. If there is coolant flow, go to step No. 15.
13. If there is no coolant flow, disassemble the thermostat housing. Refer to Procedure 1-36. Inspect the internal components for the following:
    - Broken thermostat spring.
    - Defective thermostat.
14. Repair or replace as required, and test again.

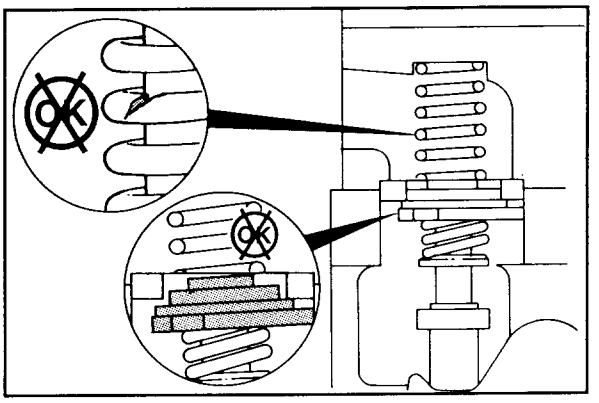

Warning: Hot coolant can cause personal injury.

15. Close the shutoff valve. Operate the engine until it reaches a minimum temperature of 90°C [190°F].

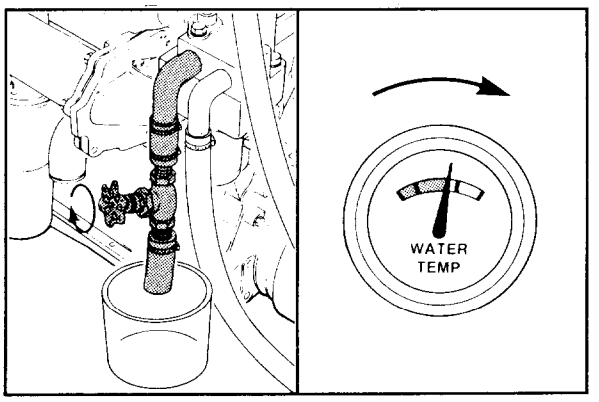

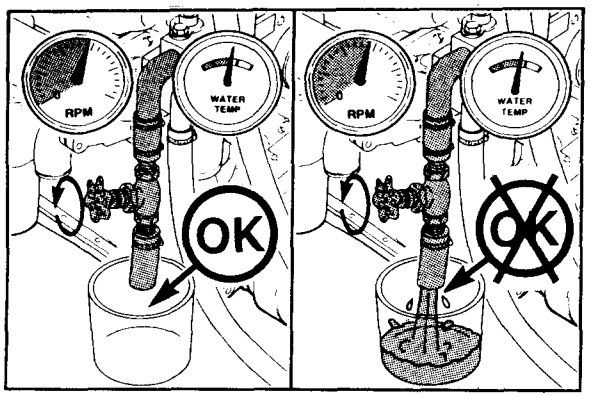

16. Carefully open the valve, and check for coolant flow. If there is any continuous coolant flow above 90°C [190°F], the thermostat is defective or incorrectly installed in the thermostat housing. Refer to Procedure 1-36.

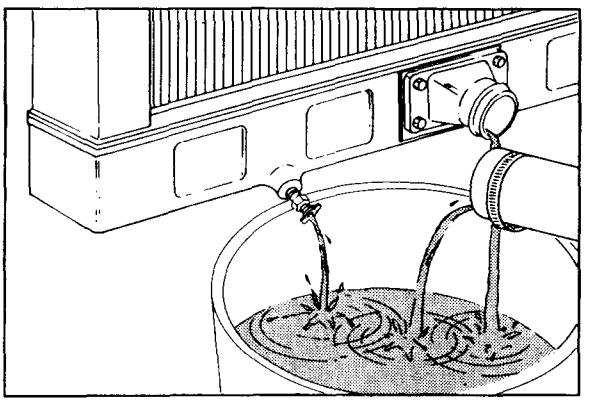

Thermostat housing (Big Cam IV) - Replace (1-35)

Remove

1. Drain the cooling system. Refer to Procedure 1-06.

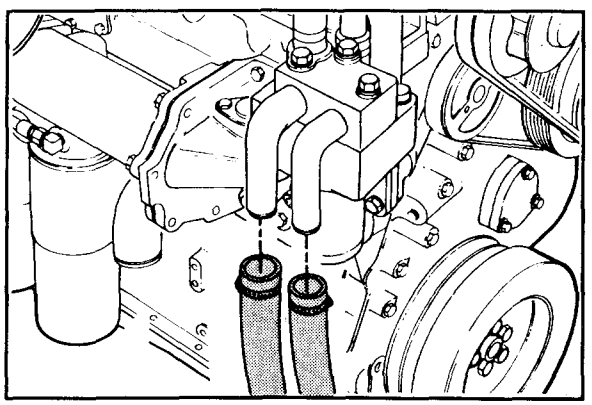

2. Loosen the engine inlet and outlet coolant hose clamps, and remove the hoses.

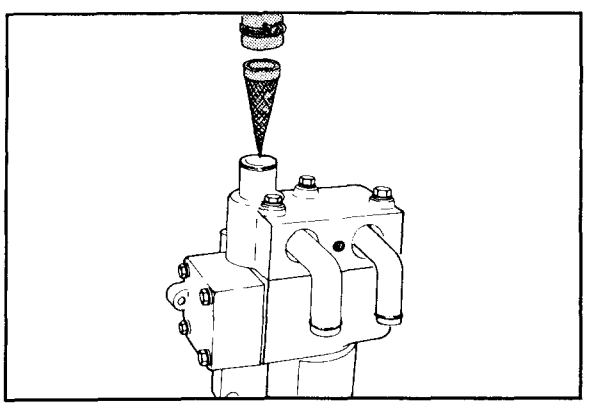

3. Loosen the clamp on the thermostat housing to the aftercooler inlet hose. Remove the hose and the aftercooler inlet screen.

4. Remove the aftercooler return hose and the engine fill hose at the thermostat housing.

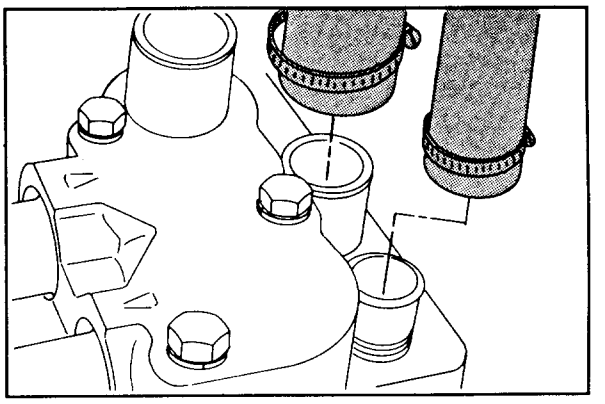

5. Remove the four capscrews on the side cover. Move the side cover away from the thermostat housing. Do **not** remove the O-rings on the transfer tube from the oil cooler to the thermostat housing.

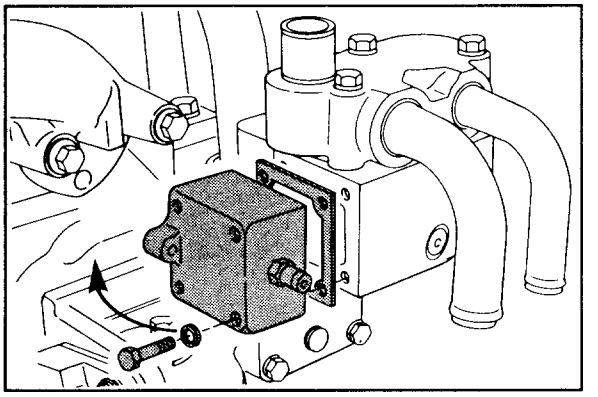

6. Remove the coolant filter.
7. Remove the four capscrews that hold the thermostat housing to the water pump inlet, and take off the thermostat housing assembly.

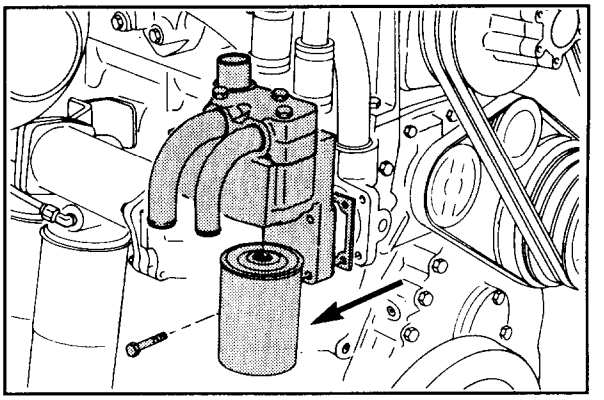

Install

1. Install a new gasket, and mount the thermostat housing on the water pump inlet. Tighten the capscrews to 45 N•m [35 ft-lbs] torque.

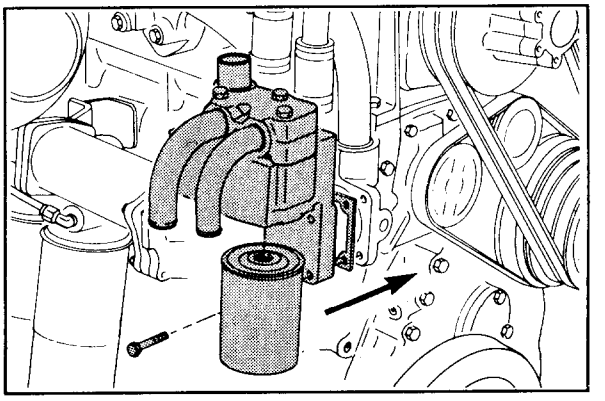

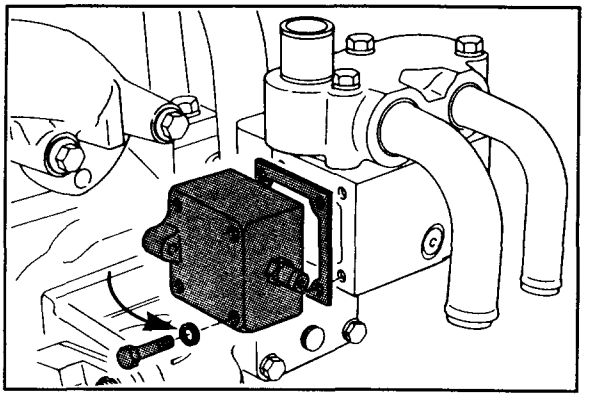

2. Install a new gasket, and mount the four-capscrew side cover to the side of the thermostat housing. Tighten the capscrews to 25 N•m [20 ft-lbs] torque.

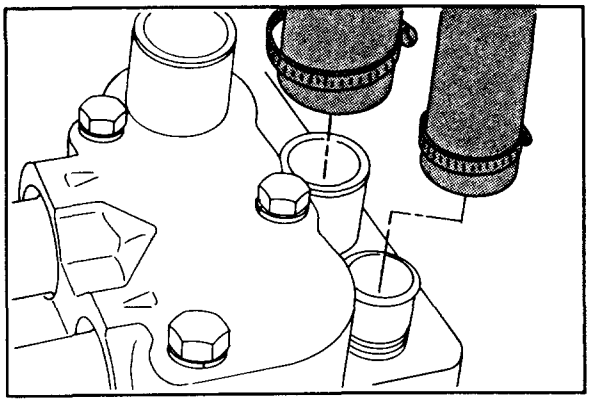

3. Connect the aftercooler return hose and the engine fill hose. Tighten the clamps to 5 N•m [40 in-lbs] torque.

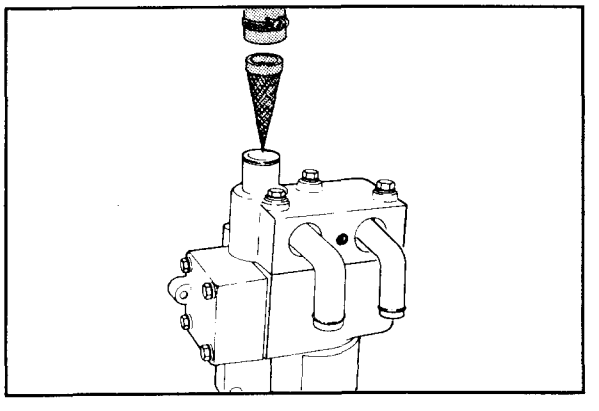

4. Install the coolant filter screen in the thermostat housing cover. Slide the hose over the connection, and tighten the clamp to 5 N•m [40 in-lbs] torque.

NOTE: The coolant filter screen **must** be installed with the pointed end of the cone down.

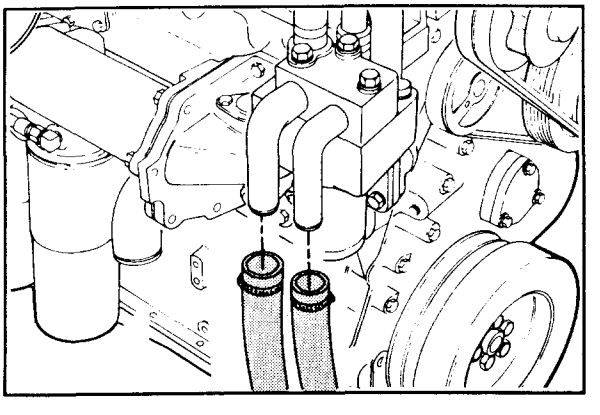

5. Install the engine coolant inlet and outlet hoses on the connections in the three-capscrew cover. Install the clamp, and tighten to 5 N•m [40 in-lbs] torque.

6. Fill the engine with coolant. Refer to Procedure 1-07. Start the engine, and check for leaks.

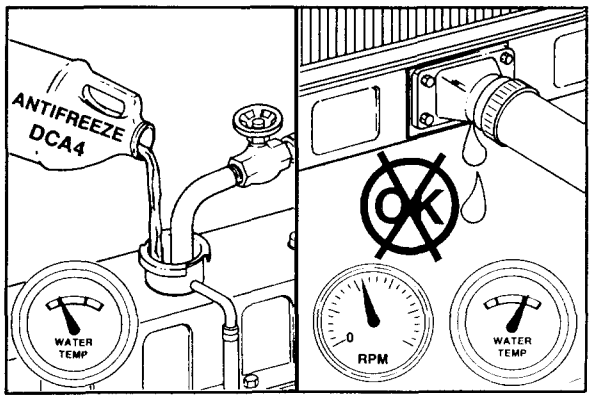

Thermostats (Big Cam IV) - Replace (1-36)

Remove

1. Drain the cooling system. Refer to Procedure 1-06.

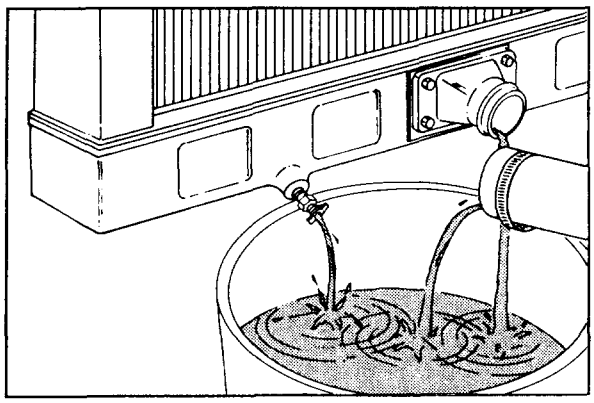

2. Loosen the engine inlet and outlet coolant hose clamps, and remove the hoses.
3. Loosen the clamp on the thermostat housing cover to the aftercooler coolant inlet hose. Remove the hose and the aftercooler inlet screen.

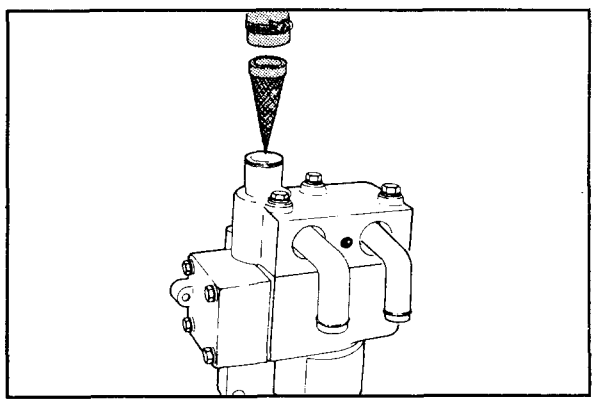

Caution: Hold the thermostat cover down when removing the capscrews. Personal injury can result from the sudden release of the spring-loaded cover.

4. Remove the front and the rear capscrews first and the center capscrew last from the top of the thermostat cover.
5. Remove the thermostats and the springs.

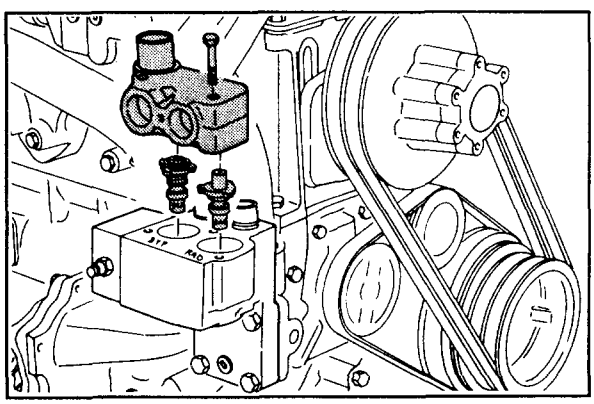

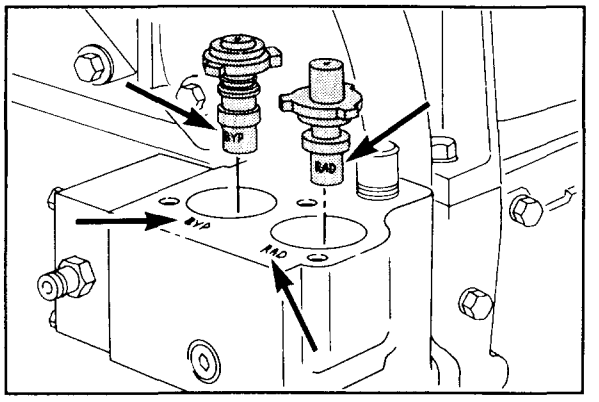

Install

Caution: The thermostats must be positioned in the correct bores so the thermostats will operate correctly. Failure to do so may cause engine damage. Refer to Step No. 1 below to identify the thermostats and the correct bore location.

1. Install the cover gasket on the thermostat housing. Carefully install the thermostats into the correct bores. Each thermostat is marked as follows:

   • BYP (Bypass) • RAD (Radiator)

   The top of the cover gasket is also marked.

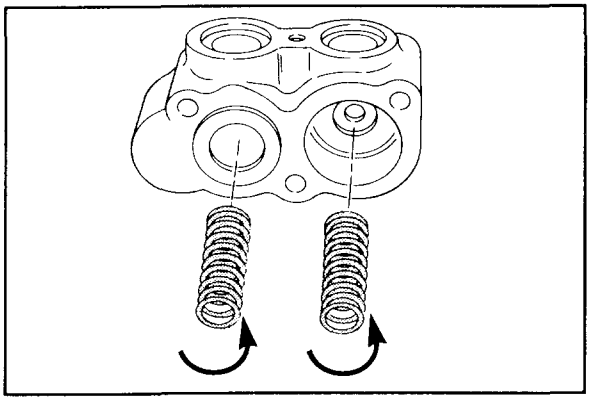

2. Twist the springs into the two bores in the cover. The springs are held in the cover by an interference fit of the springs in the bores.

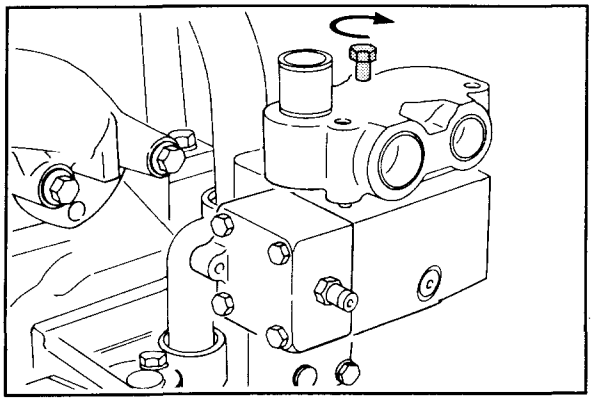

3. Position the springs on top of the thermostats, and install the cover. Hold down the cover, and tighten the center capscrew until the cover is approximately 6.4 mm [0.25-inch] above the housing.

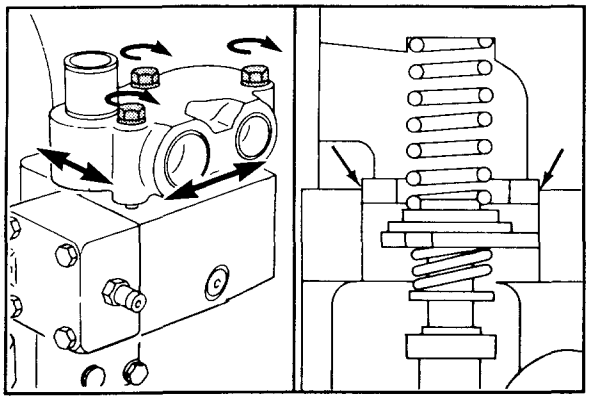

4. Move the cover back and forth until the protruding bypass seat drops into the bore. Tighten the capscrews alternately so the seat correctly enters into the bore. Tighten the capscrews to 45 N•m [35 ft-lbs] torque.

NOTE: The bypass seat **must** be in the bore before the cover is tightened.

5. Install the coolant filter screen in the aftercooler inlet hose. Slide the hose over the connection, and tighten the clamp to 5 N•m [40 in-lbs] torque.

NOTE: Install the coolant filter screen with the pointed end of the cone down.

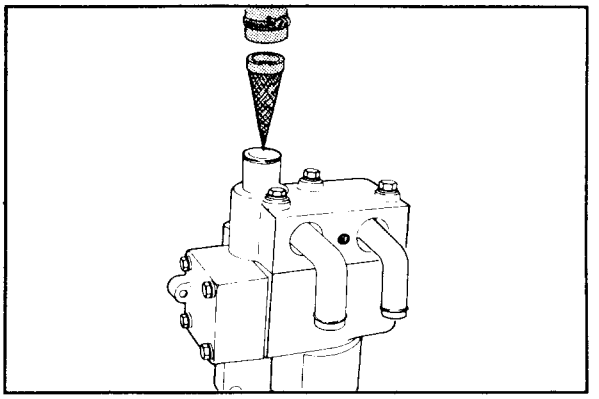

6. Install the engine coolant inlet and outlet hoses to the connections on the three-capscrew cover. Install the clamps, and tighten to 5 N•m [40 in-lbs] torque.

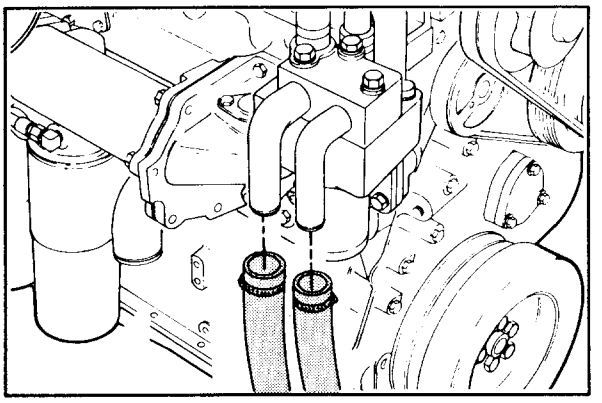

7. Fill the engine with coolant. Refer to Procedure 1-07. Start the engine, and check for leaks.

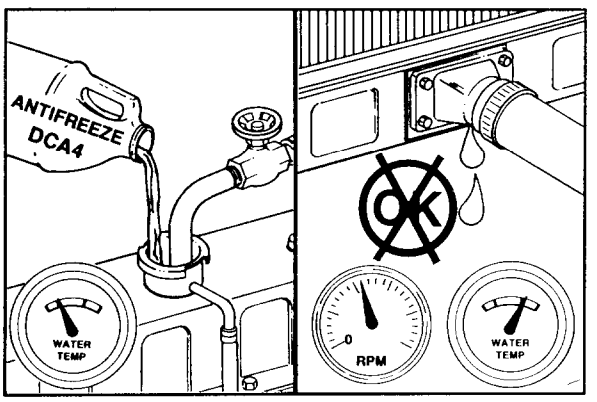

Thermostat Seat, Bypass (Big Cam IV) - Replace (1-37)

Remove

1. Drain the cooling system. Refer to Procedure 1-06.

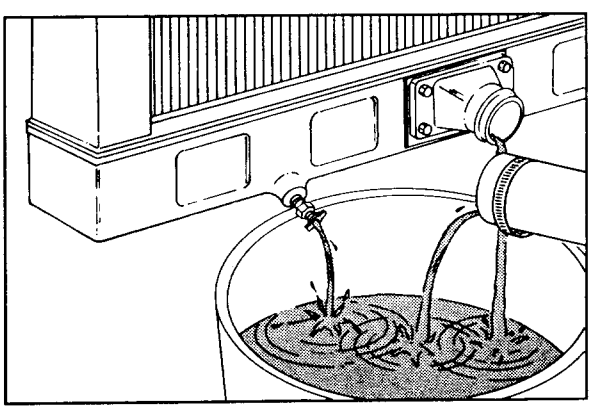

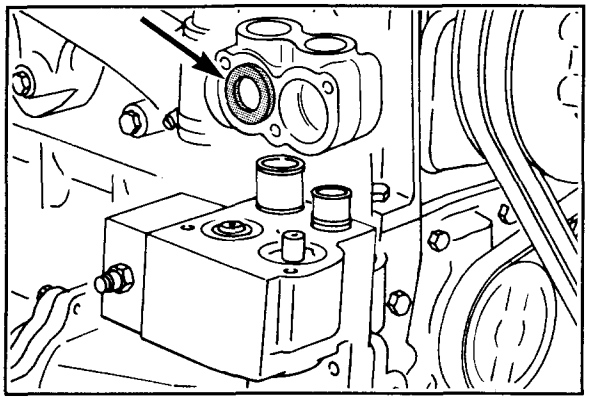

Caution: Hold the thermostat cover down when removing the capscrews. Personal injury can result from the sudden release of the spring-loaded cover.

2. Remove the thermostat housing cover. Refer to Procedure 1-36.
3. The bypass thermostat seat is pressed into the three-capscrew cover.

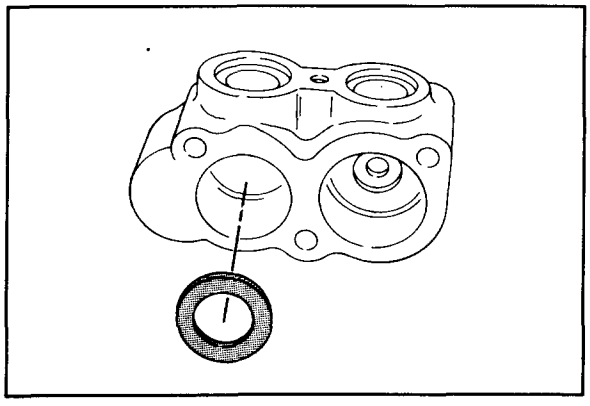

4. If the seat is defective and **must** be replaced, remove the seat by pulling it out of the counterbore with a universal puller.

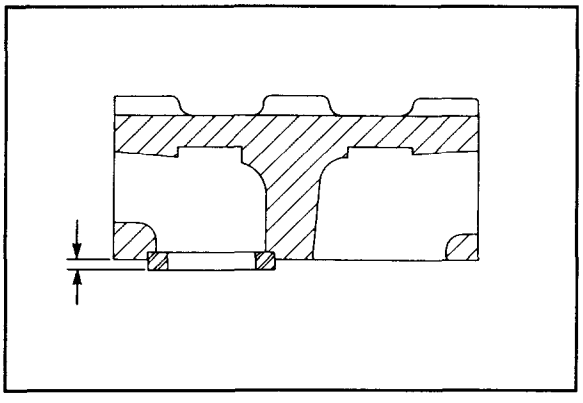

Install

1. Install the seat by pressing it into the cover until it contacts the bottom of the counterbore. The seat **must** protrude 3.18 mm to 3.56 mm [0.125-inch to 0.140-inch] above the surface of the thermostat housing cover.

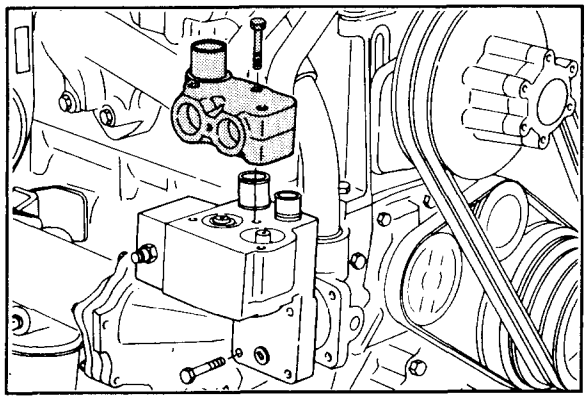

2. Install the cover on the thermostat housing. Refer to Procedure 1-36.

3. Fill the engine with coolant. Refer to Procedure 1-07. Start the engine, and check for leaks.

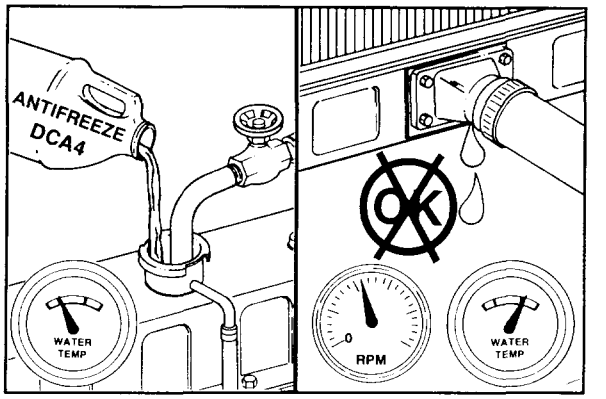

Thermostat Seat, Radiator (Big Cam IV) - Replace (1-38)

Remove

1. Drain the cooling system. Refer to Procedure 1-06.

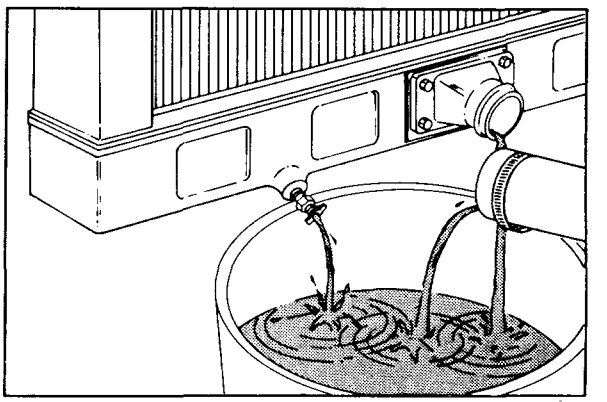

Caution: Hold the thermostat cover down when removing the capscrews. Personal injury can result from the sudden release of the spring-loaded cover.

2. Remove the thermostat housing. Refer to Procedure 1-35.
3. Remove the thermostats. Refer to Procedure 1-36.

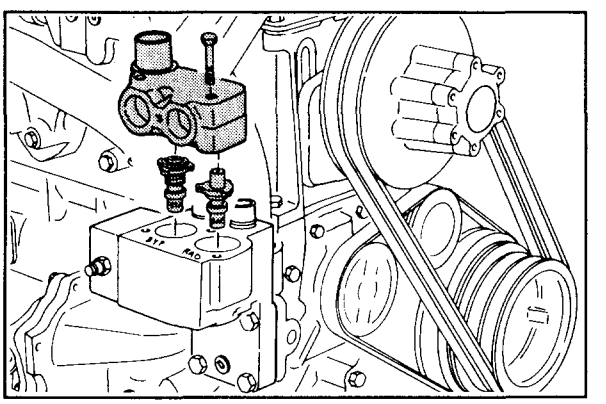

4. Remove the thermostat seat with a universal puller.

NOTE: New thermostat housings already have the seat installed.

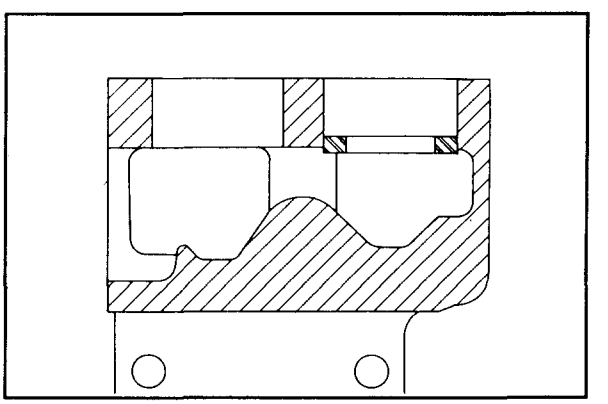

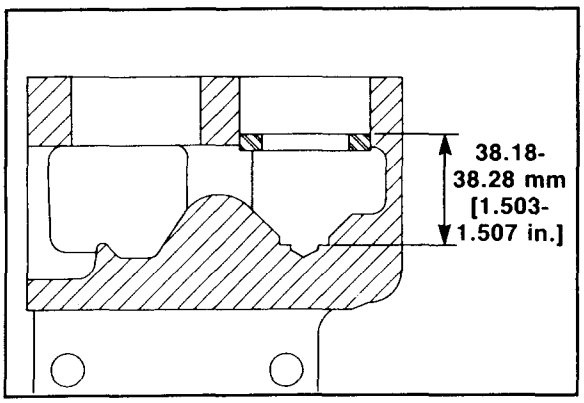

Install

1. If the seat **must** be replaced, use Part No. 3377291 Thermostat Seat Driver to install the seat. If the tool is **not** available, press the seat in by hand. The top side of the seat **must** be 38.18 to 38.28 mm [1.503 to 1.507 inches] from the bottom of the thermostat bore in the housing.

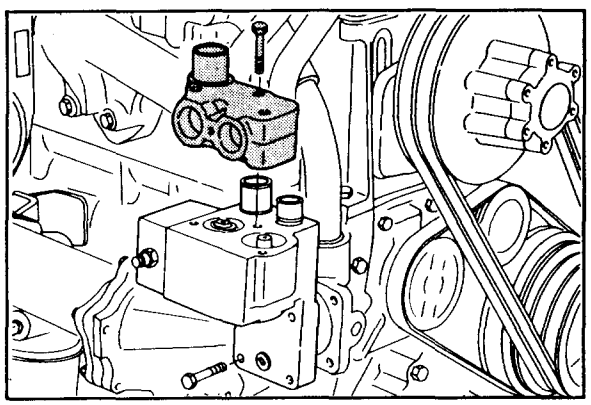

2. Install the thermostats. Refer to Procedure 1-36.
3. Install the thermostat housing. Refer to Procedure 1-35.

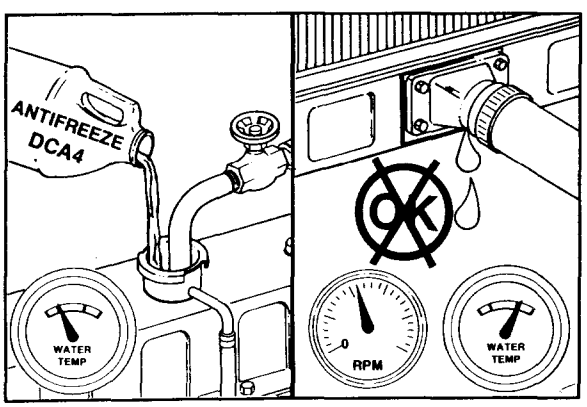

4. Fill the engine with coolant. Refer to Procedure 1-07. Start the engine, and check for leaks.

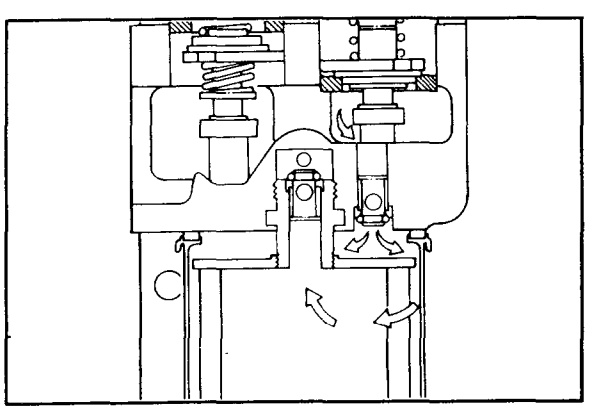

Thermostat Housing Check Valve O-rings (Big Cam IV) - Replace (1-39)

Remove and Install

1. There are two check valves in the thermostat housing which prevent the coolant from draining when the coolant filter is removed.

NOTE: If the check valve assembly requires replacement, refer to Procedure 1-40.

2. Drain the cooling system. Refer to Procedure 1-06.
3. Remove the coolant filter.

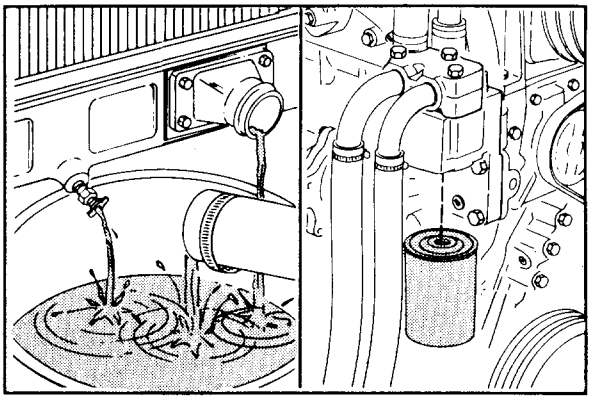

Check Valve, Coolant Filter Inlet

1. Use a sharp object to pull the check valve, in the thermostat housing, downward until a paper clip or wire can be inserted through the hole in the check valve.
2. Install the O-ring, and remove the paper clip or wire.

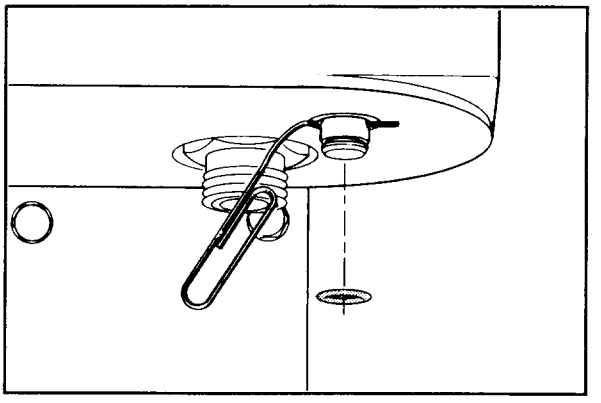

Check Valve, Coolant Filter Outlet

1. To reach the other check valve, remove the coolant filter head insert.

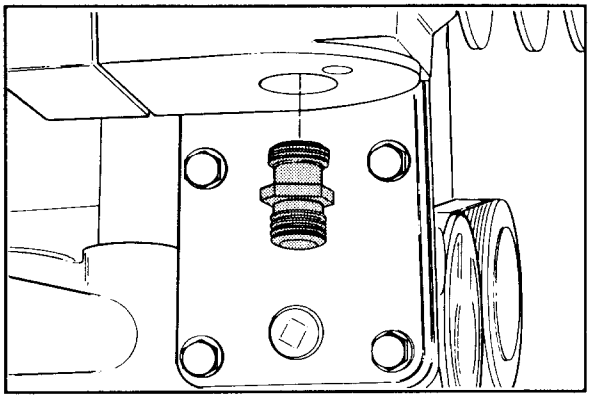

2. Push the check valve out until a paper clip or wire can be inserted through the hole in the check valve.
3. Install the O-ring, and remove the paper clip or wire.

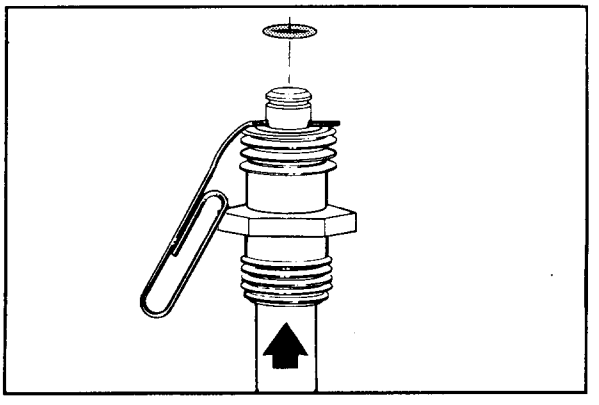

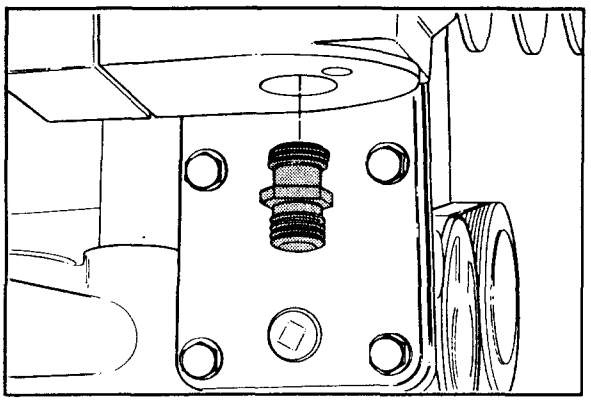

4. Install the insert into the thermostat housing, and tighten to 45 N•m [35 ft-lbs] torque.

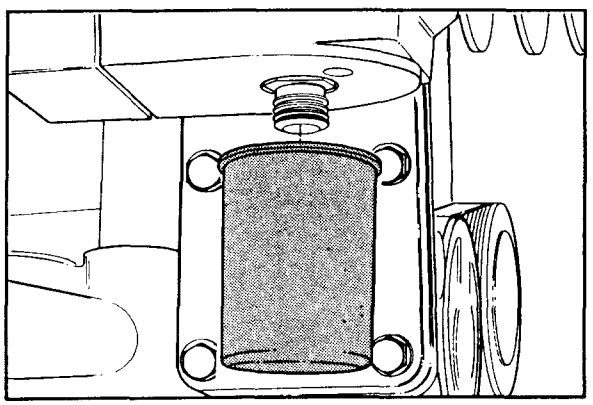

5. Install the coolant filter.

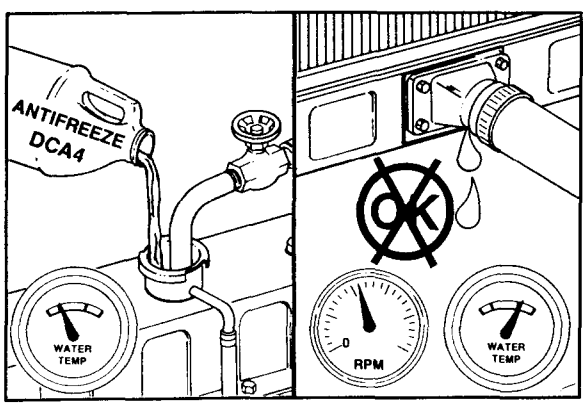

6. Fill the engine with coolant. Refer to Procedure 1-07. Start the engine, and check for leaks.

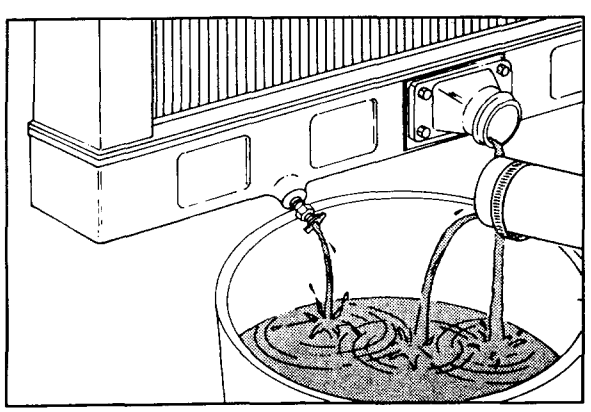

Thermostat Housing Check Valve Assembly (Big Cam IV) - Replace (1-40)

Remove and Install

1. Drain the cooling system. Refer to Procedure 1-06.

2. Remove the coolant filter and the filter head insert from the thermostat housing.

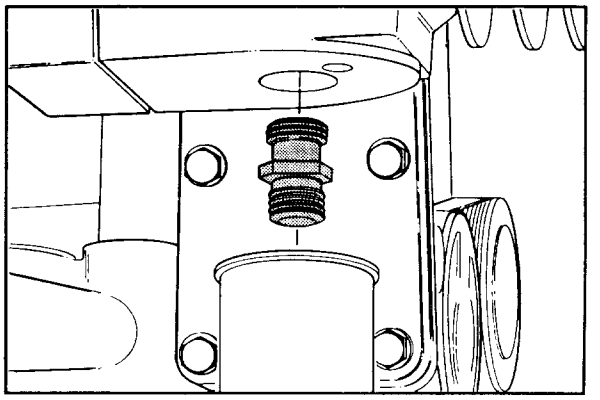

Check Valve Assembly, Coolant Filter Outlet

1. Remove the check valve assembly in the insert by pushing the check valve out from the bottom.

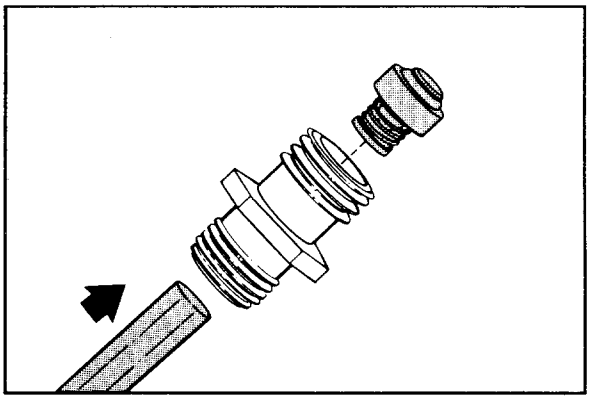

2. Use Part No. 3377414 Check Valve Driver to install the check valve so the O-ring will **not** be cut when the check valve is installed.

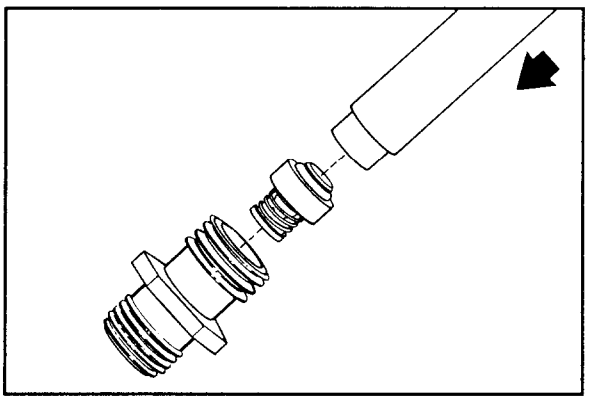

3. Press the check valve into the insert until the seat of the valve is level with the top of the insert.

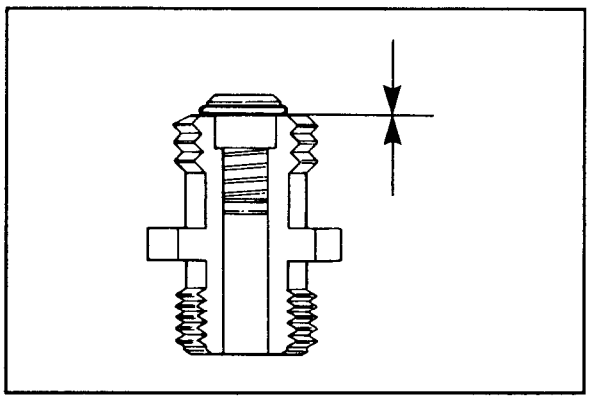

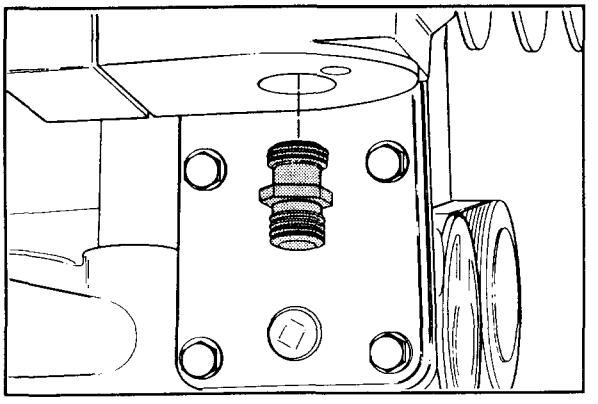

4. Install the insert into the thermostat housing, and tighten to 45 N•m [35 ft-lbs] torque.

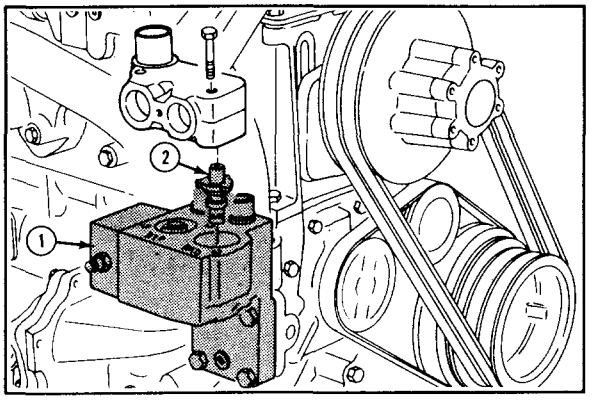

Check Valve Assembly, Coolant Filter Inlet

1. Remove the thermostat housing (1). Refer to Procedure 1-35.
2. Remove the radiator thermostat (2). Refer to Procedure 1-36.

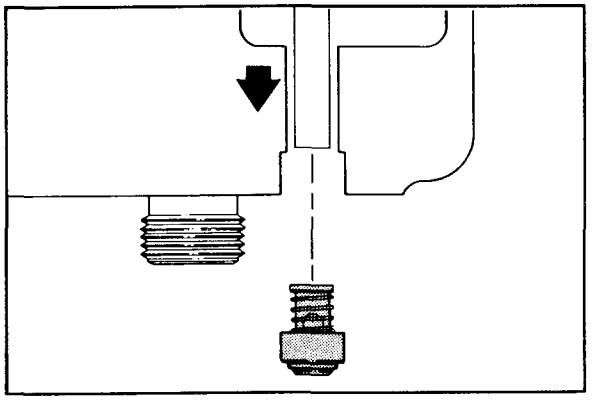

3. Drive the check valve out from the top of the housing.

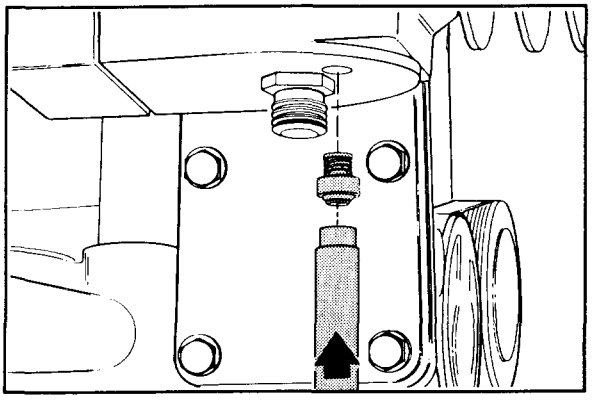

4. Use Part No. 3377414 Check Valve Driver to install the check valve so the O-ring will **not** be cut when the check valve is installed.

5. Press the check valve 6.4 mm [0.25-inch] below the surface of the housing. This will prevent any interference with the coolant filter.

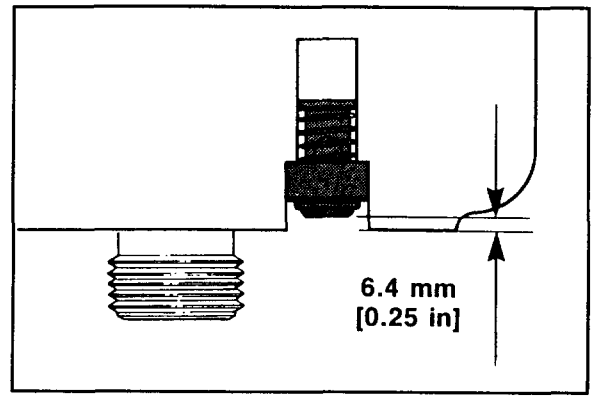

6. Install the thermostat in the housing. Refer to Procedure 1-36.
7. Install the thermostat housing. Refer to Procedure 1-35.

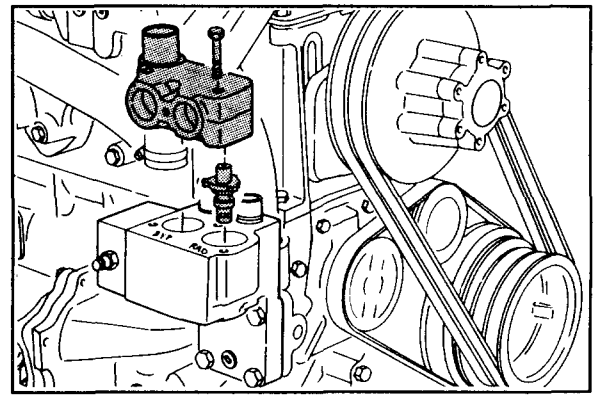

8. Install the coolant filter.

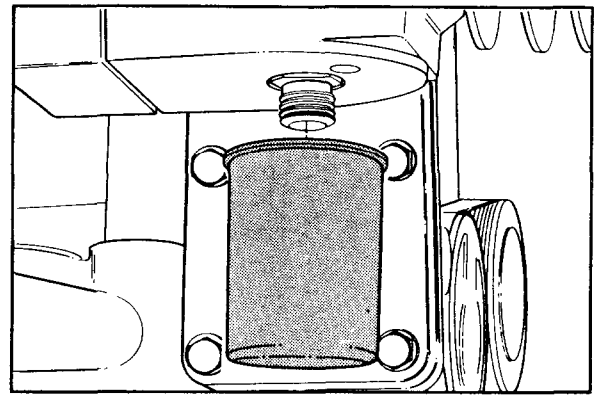

9. Fill the engine with coolant. Refer to Procedure 1-07. Start the engine, and check for leaks.

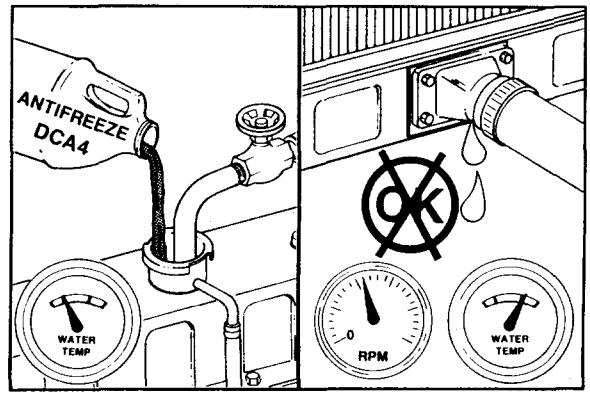

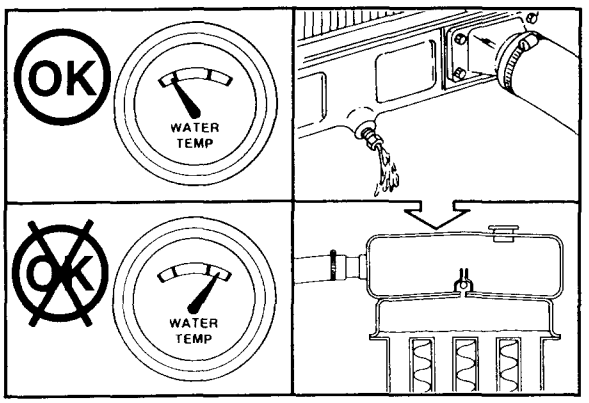

Radiator Check Valve Leakage (Big Cam IV Only) - Check (1-41)

Warning: Complete this test with the engine coolant temperature below 50°C [120°F]. Hot steam can cause serious personal injury.

1. Drain the coolant until the level is below the engine fill line in the auxiliary tank.

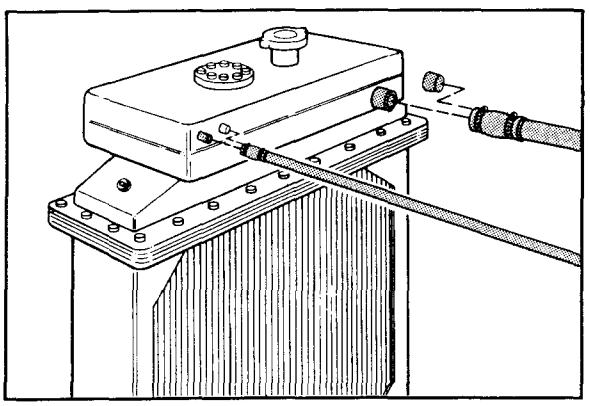

2. Remove the engine fill and vent lines from the auxiliary tank, and plug the lines.

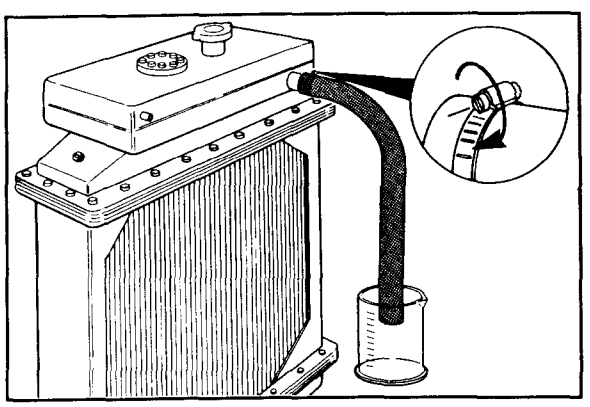

3. Install a hose on the auxiliary tank engine fill connection. Use a hose long enough to reach a remote dry container to collect the coolant.
4. Install and tighten a hose clamp on the hose at the auxiliary tank engine fill connection.
5. Install the end of the hose in a dry container.

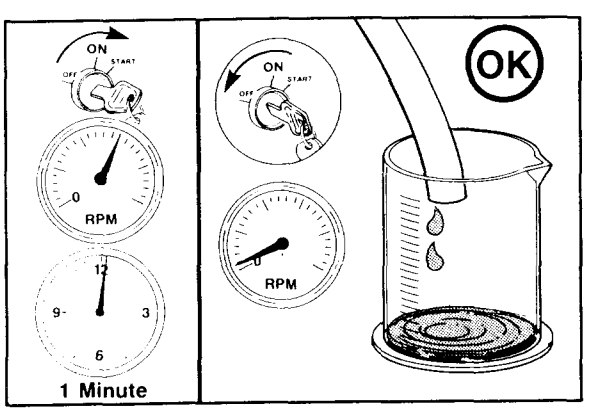

6. Operate the engine at rated RPM for one (1) minute.
7. Shut the engine off, and measure the amount of coolant collected in the container.
8. The amount of coolant collected **must not** be more than 100 cc [3.3 fluid ounces].

9. If the amount of coolant collected is more than 100 cc [3.3 fluid ounces], the check valve is defective and **must** be replaced. Refer to the radiator manufacturer's instructions for check valve replacement.

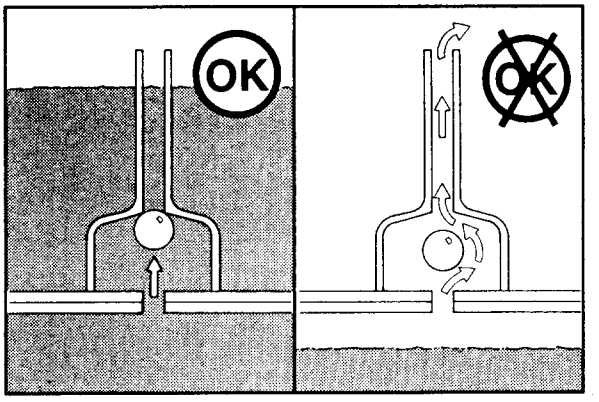

10. If the amount of coolant collected is less than 100 cc [3.3 fluid ounces], remove the hose from the auxiliary tank connection and the plugs from the engine fill and vent lines.

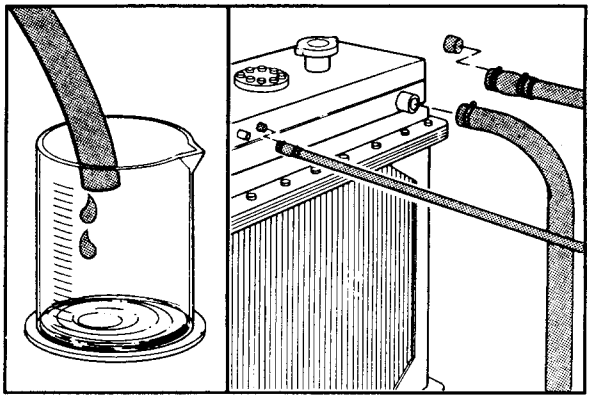

11. Install the engine fill and vent hoses on the auxiliary tank. Tighten the hose clamp to 5 N•m [40 in-lbs] torque.

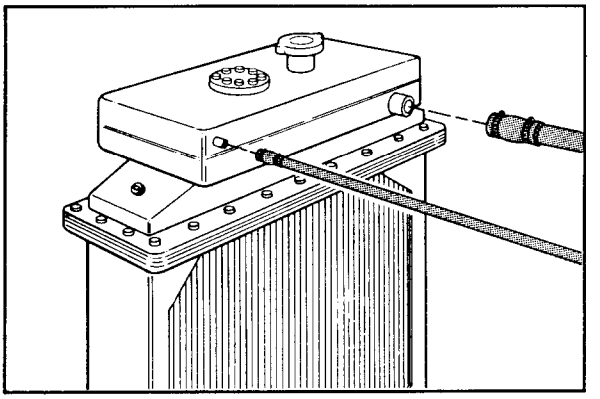

12. Fill the cooling system with coolant to the bottom of the fill neck in the radiator fill tank.

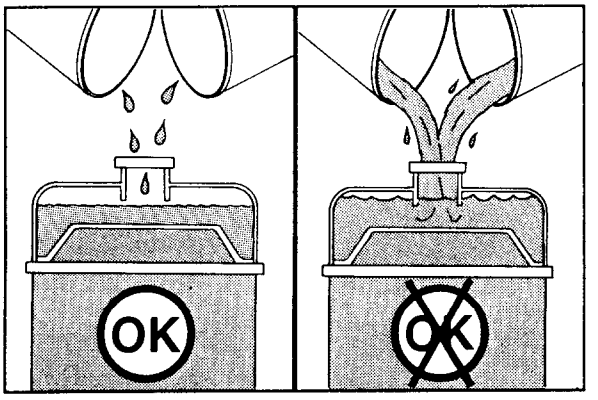

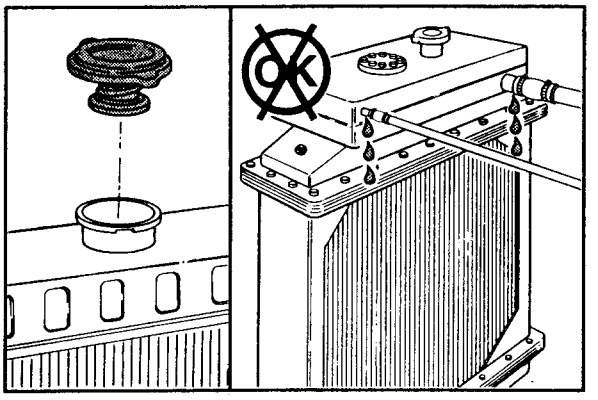

13. Install the radiator or fill cap.
14. Operate the engine until it reaches a temperature of 80°C [180°F], and check for leaks.

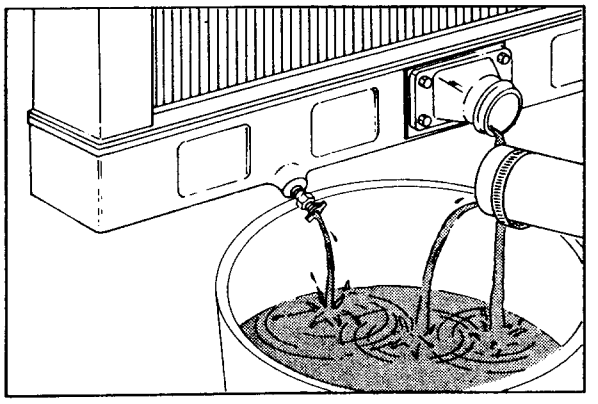

Aftercooler Filter Screen (Big Cam IV Only) - Clean (1-42)

1. Drain the cooling system. Refer to Procedure 1-06.

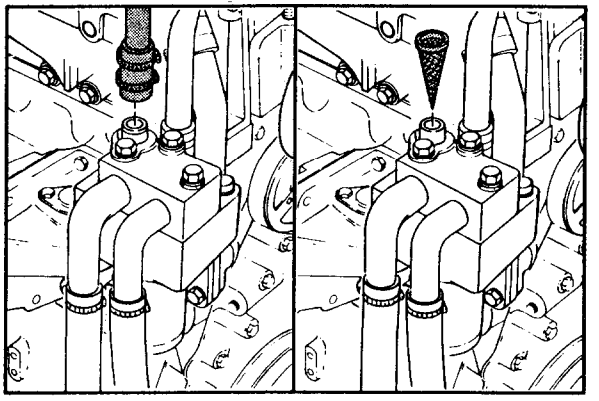

2. Remove the aftercooler inlet line from the thermostat housing cover.
3. Remove the screen from the thermostat housing cover.

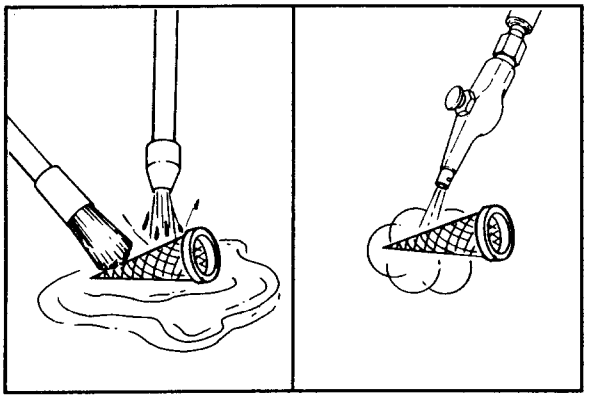

4. Clean the screen with mineral spirits or cleaning solvent. Dry with compressed air.
5. Check for damage, and replace if necessary.

6. Put the screen back in the thermostat housing cover. Connect the aftercooler inlet line. Tighten the hose clamp to 5 N•m [40 in-lbs] torque.

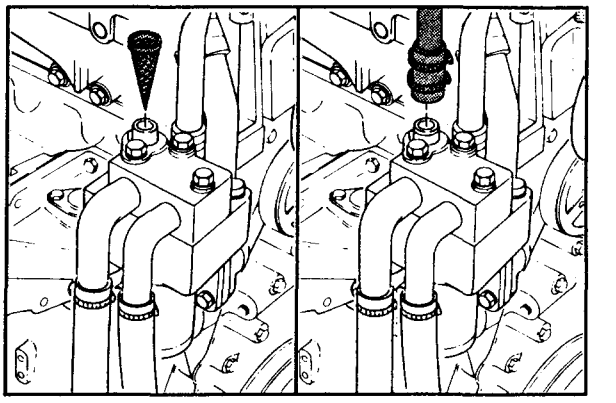

7. Fill the engine with coolant. Refer to Procedure 1-07. Start the engine, and check for leaks.

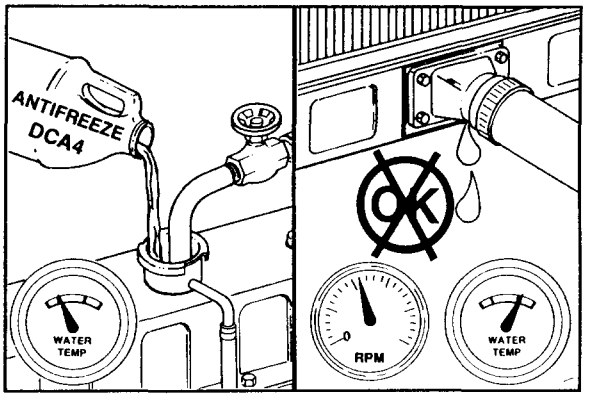

Warning: Check the coolant level only when the engine is stopped. Wait until the temperature is below 50°C [120°F] before removing the pressure cap. Failure to do so can cause personal injury from heated coolant spray.

8. Run the engine for several minutes. Check the coolant level again.

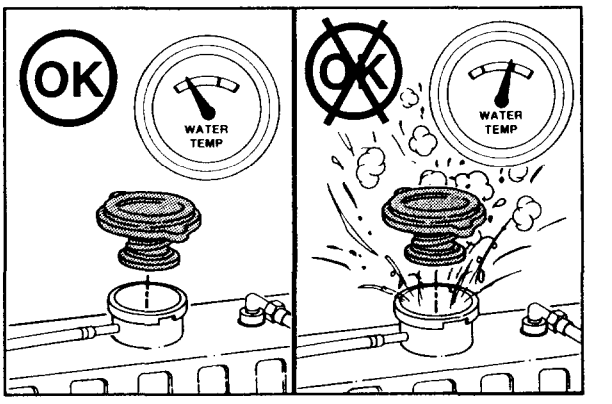

Water Manifold Sealing Ring Balance Orifices (Big Cam IV Only) - Replace (1-43)

Remove

NOTE: The water manifold requires sealing rings with a 3/8-inch orifice to prevent engine overheating.

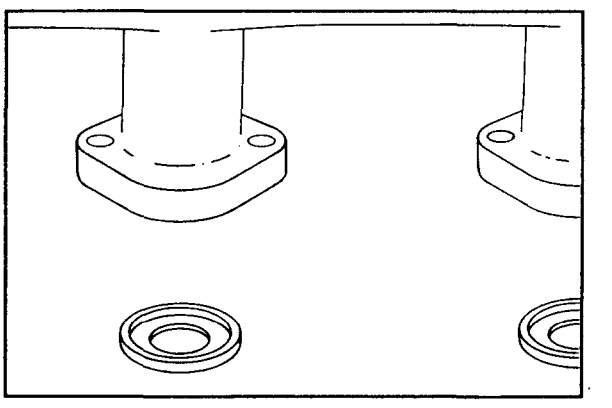

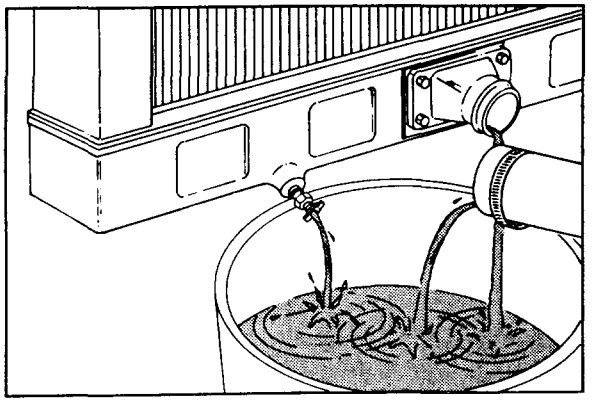

1. Drain the cooling system. Refer to Procedure 1-06.

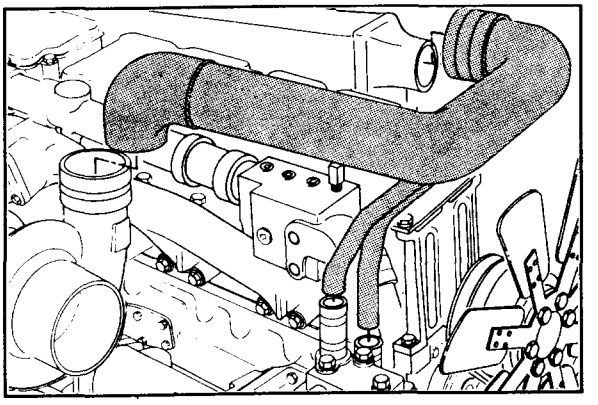

2. Remove the air crossover tube and the aftercooler coolant inlet and outlet tubes.

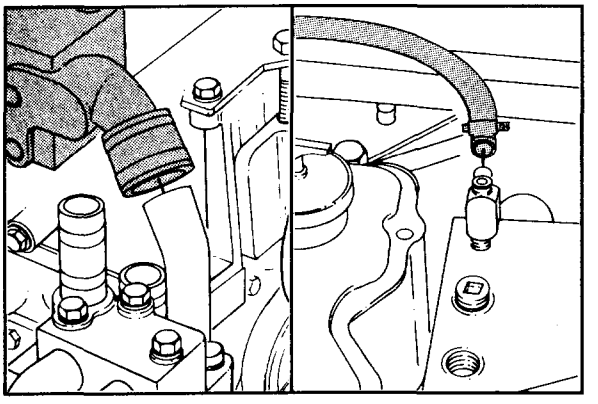

3. Remove the water bypass tube and the coolant vent lines from the front water manifold.

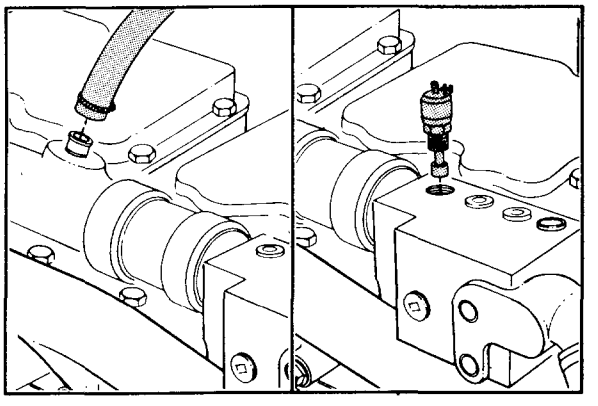

4. Remove the heater hose; and disconnect or remove all coolant temperature sensing units for the fan, the shutters, and the temperature gauge from the water manifold.

5. Remove the capscrews which secure the water manifold to the cylinder head, and remove the manifold.

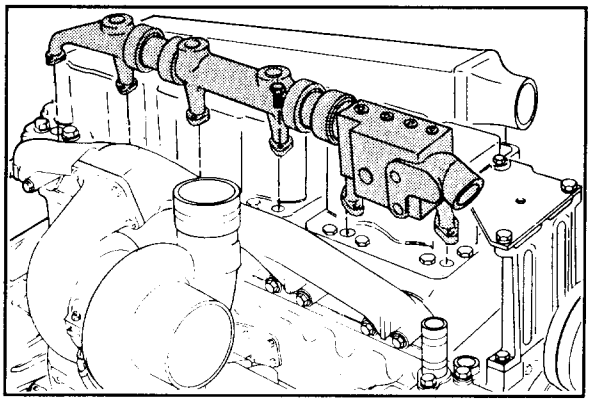

6. Inspect the water manifold for cracked or broken mounting flanges.

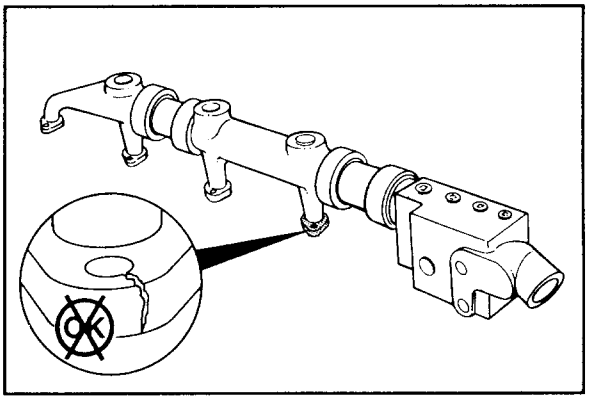

7. Remove the balance orifices from the cylinder head. Inspect the counterbores in the cylinder head for cracks or pitting.

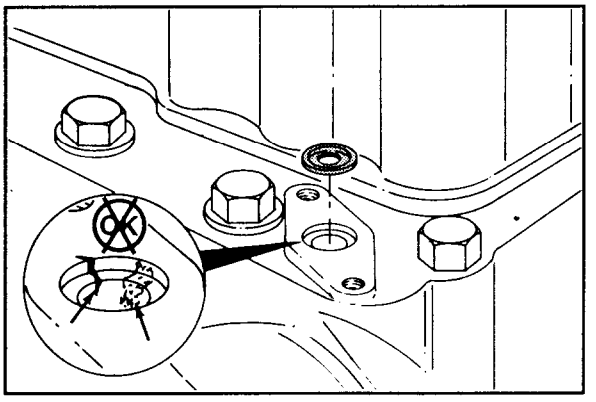

Install

1. Install new balance orifices in the cylinder head counterbores.
2. Position the water manifold assembly on the cylinder head. Install the capscrews, and tighten to 45 N•m [35 ft-lbs] torque.

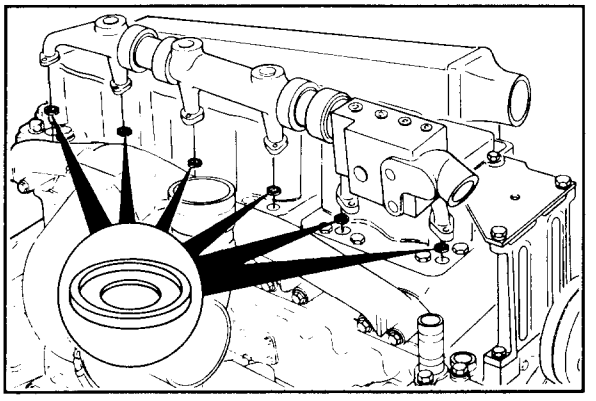

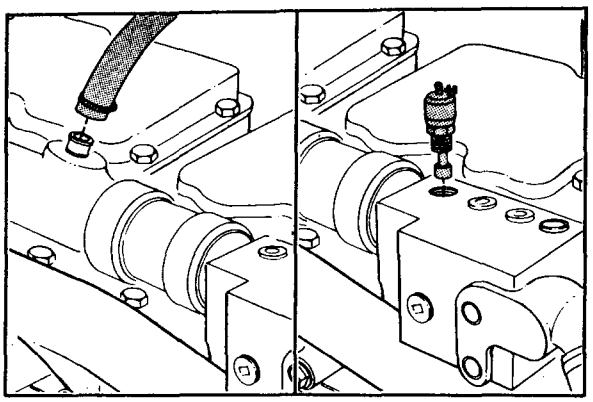

3. Install or connect the heater hose and the coolant temperature sensing units to the water manifold.

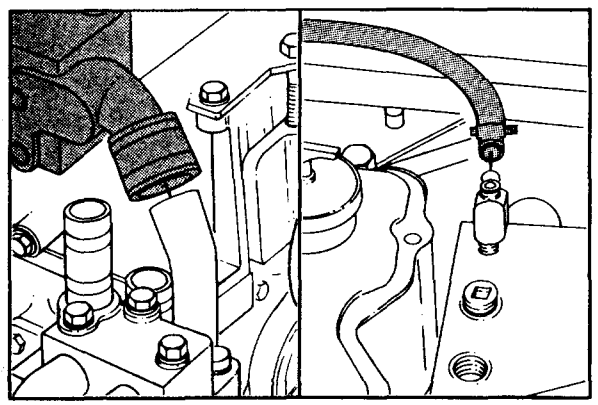

4. Install the water bypass tube and the coolant vent hoses to the front water manifold. Tighten the hose clamps to 5 N•m [40 in-lbs] torque.

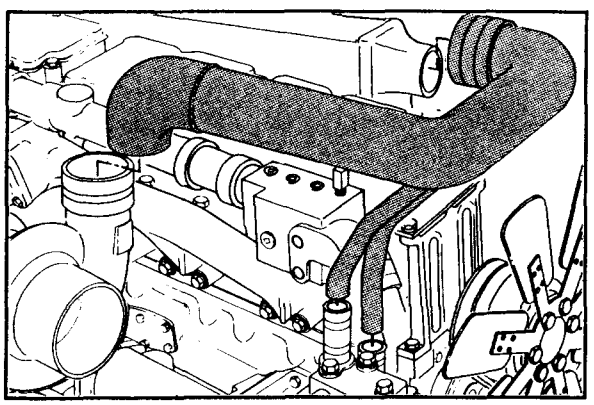

5. Install the aftercooler coolant inlet and outlet hoses. Tighten the hose clamps to 5 N•m [40 in-lbs] torque.
6. Install the air crossover tube. Tighten the hose clamps to 8 N•m [70 in-lbs] torque.

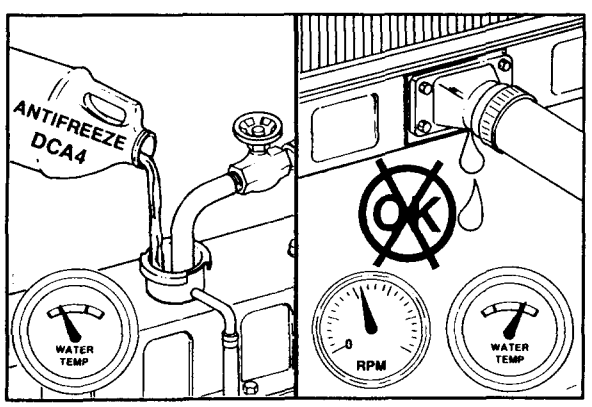

7. Fill the engine with coolant. Refer to Procedure 1-07. Start the engine, and check for leaks.

Radiator Baffle Leakage (Big Cam IV Only) - Check (1-44)

1. A baffle leak will allow some coolant to bypass the radiator core. This will decrease the radiator's performance and can cause the engine to overheat.

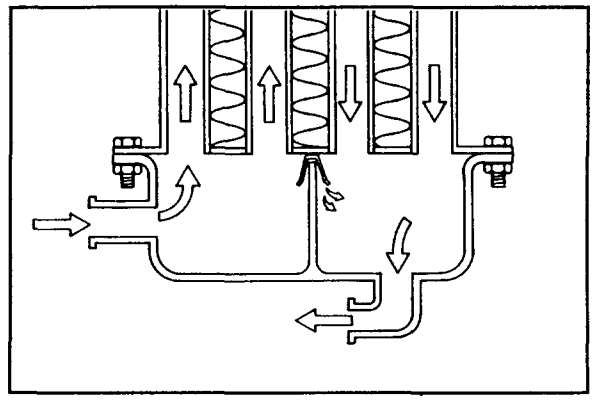

Radiator (Two-Pass, Vertical-Flow) - Check (1-45)

1. If the radiator is a vertical-flow model with the baffle in the bottom tank, a baffle leakage check can be performed without removing the radiator from the chassis.

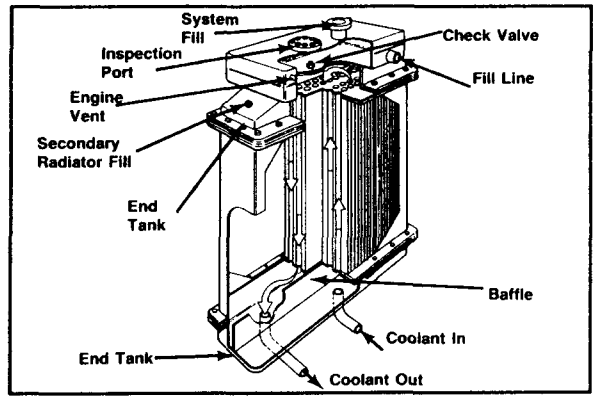

2. Drain the radiator completely. Disconnect the coolant inlet and outlet hoses from the bottom of the radiator so that any leakage can be observed and collected. Use a section of the radiator hose and a funnel to fill the inlet side of the radiator with water.
3. Fill the radiator to a level of at least 0.6 m [2 feet] but **not** higher than the top of the radiator core. Use the top of the hose to determine the level in the radiator core.

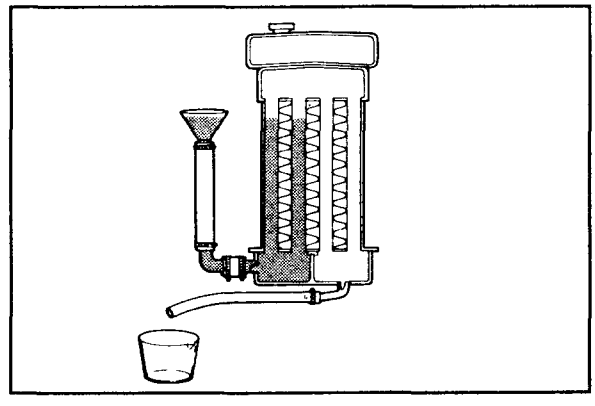

4. If some fluid appears at the outlet side of the radiator, put a container under the leakage. If more than 0.5 litres [1 U.S pint] of fluid is collected in 60 seconds, remove and repair the radiator.

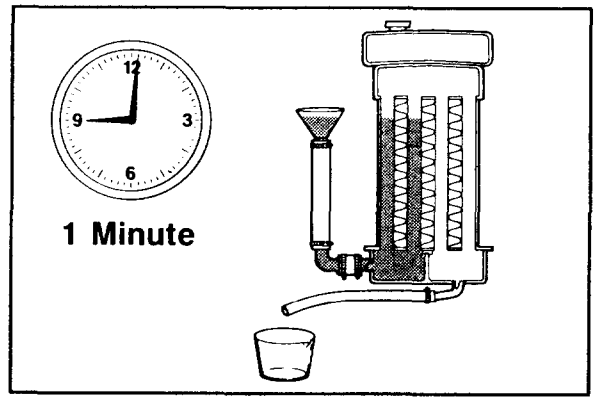

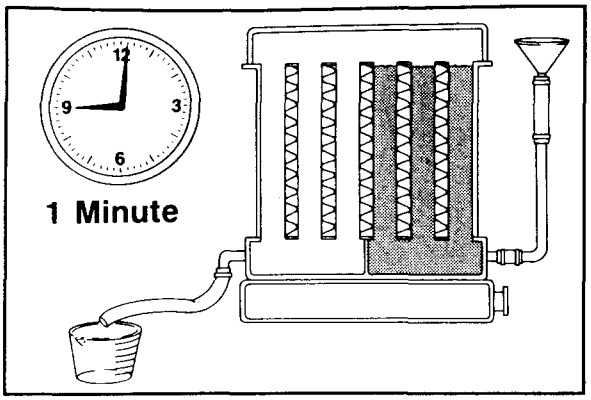

Radiator (Horizontal-Flow) - Check (1-46)

1. Use the same procedure to measure leakage from a horizontal-flow radiator. Remove a horizontal-flow radiator from the vehicle, and put it in a vertical position with the baffle at the bottom.

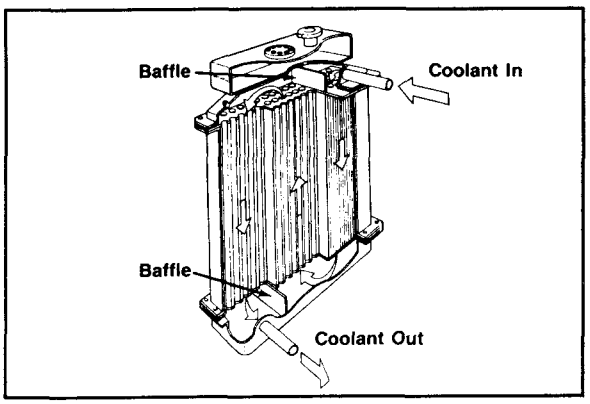

Radiator (Three-Pass, Vertical-Flow) - Check (1-47)

1. If the radiator is a three-pass, vertical-flow version, only the lower baffle can be checked in-chassis with this technique.

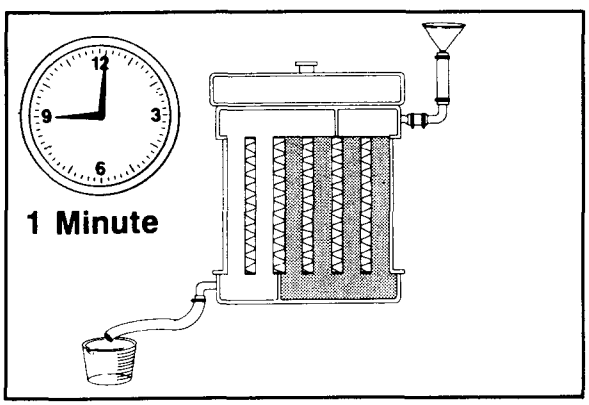

2. Fill the radiator from the upper tube until some fluid appears at the lower connection. This indicates that the first two sections of the core have been filled.
3. After the initial overflow has drained, flow from the tube will stop. If it does **not**, begin the timed measurement of the leakage rate. If more than 1.0 litres [1 U.S. quart] of fluid is collected in 60 seconds, remove and repair the radiator.

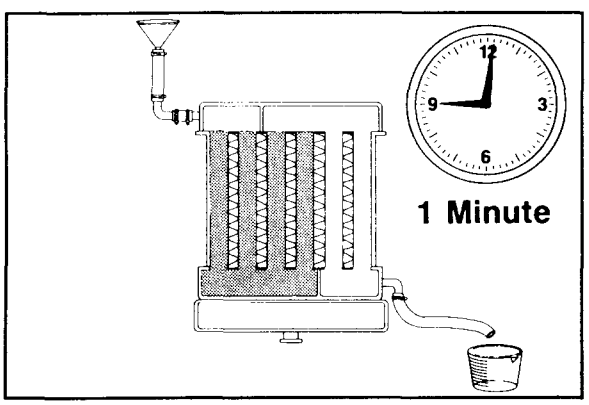

4. To check the upper baffle, remove the radiator from the chassis and turn it upside down. Use the same technique described above to measure the leakage.

Head Gasket, Cylinder Liner, Crevice Seal or Cylinder Block - Inspect For Coolant Leaks (1-48)

1. Drain the engine lubricating oil. Refer to Section 2, Procedure 2-09.
2. Remove the lubricating oil pan. Refer to Section 2, Procedure 2-16.

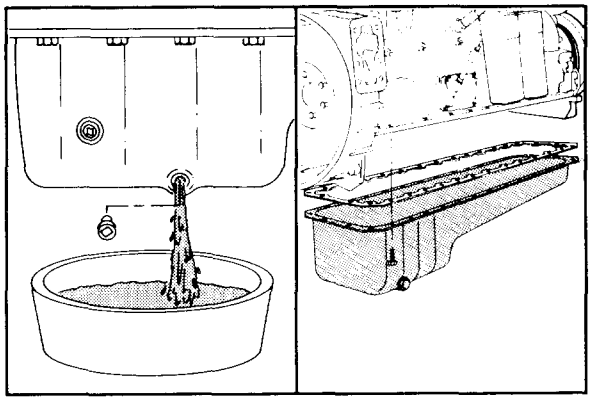

3. Use 140 kPa [20 psi] air pressure to pressurize the engine cooling system. Refer to Procedure 1-12.

NOTE: Apply the air pressure 15 minutes before inspecting the cylinder liner, the crevice seal, or the cylinder block for coolant leaks. Make sure the system is holding air pressure before beginning the inspection.

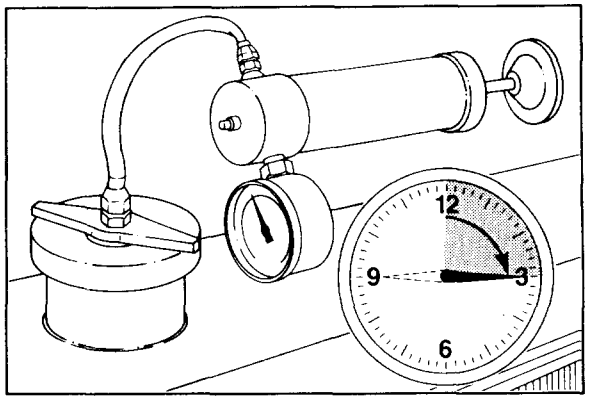

4. Inspect the inside and the outside diameters of the cylinder liners and also the area of the cylinder block around the crevice seals and the push tube cavity for coolant leaks.

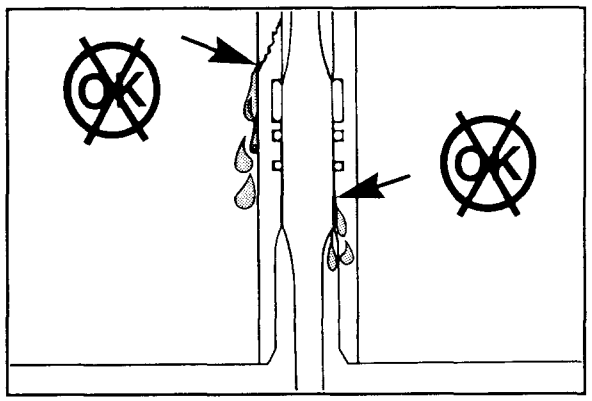

5. If a leak is found, remove the pressure test equipment. Remove the cylinder head gasket, and inspect for coolant leaks.

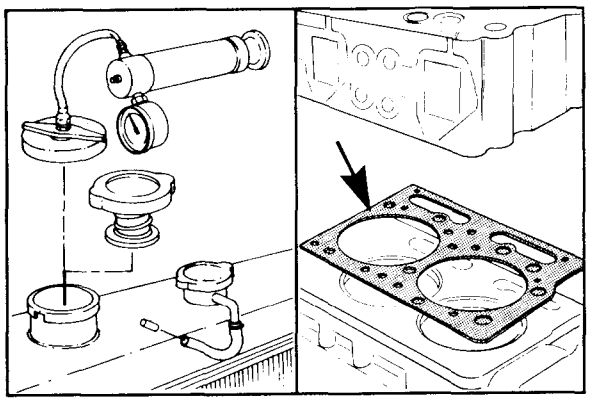

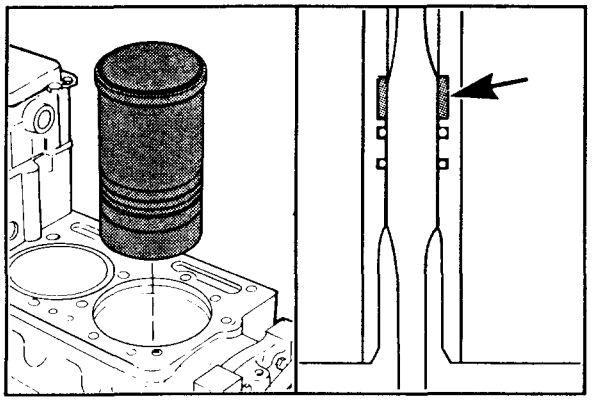

6. Remove and inspect the cylinder liner(s) for cracks, porosity, or crevice seal damage.
7. Inspect the cylinder block for cracks or porosity in the crevice seal area. Refer to Section 7, Procedure 7-24, for cylinder liner removal and installation procedures.

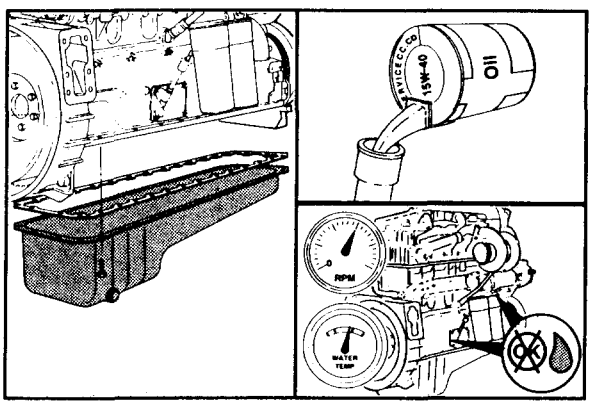

8. Install a new gasket and the lubricating oil pan. Refer to Section 2, Procedure 2-16.
9. Fill the engine with clean 15W-40 lubricating oil. Refer to Section 2, Procedure 2-10.

NOTE: Make sure the oil drain plug is tight.

10. Operate the engine until it reaches a temperature of 80°C [180°F], and check for coolant or lubricating oil leaks.

Section 2 - Lubricating Oil System

Table of Contents

	Reference No.	Page No.
Service Tools	2-00	2
General Information	2-01	3
Demand Flow and Cooling Lubricating System - Operation	2-02	4
Specifications	2-03	7
Flow Diagrams	2-04	8

System Troubleshooting and Repair List

	Procedure No.	Page No.
Crankcase Breather and Tube - Replace	2-12	15
Dipstick - Calibrate	2-14	18
Dipstick Tube and Housing - Replace	2-13	17
High Oil Pressure Relief Valve - Check	2-26	46
High Oil Pressure Relief Valve - Replace	2-27	47
Internal Engine Damage - Check	2-05	9
Main Oil Pressure Regulator - Replace	2-22	38
Oil Cooler Assembly - Replace	2-19	27
Oil Cooler Bypass Valve - Check	2-17	23
Oil Cooler Core - Pressure Test	2-21	36
Oil Cooler Core - Replace	2-20	31
Oil Filter Head - Replace	2-18	25
Oil Filters (Full Flow and Bypass) - Replace	2-11	13
Oil Leaks (External) - Check	2-06	10
Oil Pan, Drain	2-09	12
Oil Pan, Fill	2-10	12
Oil Pan - Replace	2-16	21
Oil Pressure Gauge - Check	2-07	11
Oil Pump - Replace	2-25	43
Oil Pump Signal Line Orifice - Clean "In Chassis"	2-23	39
Oil Pump Signal Line Orifice - Clean "Pump Removed"	2-24	40
Oil Temperature Gauge - Check	2-08	11
Oil Transfer Tube - Replace	2-15	19

Required Service Tools - (2-00)

Lubricating Oil System

Procedure No.	Part No.	Description
2-05	3375301	Tube Cutter
	3376579	Tube Cutter
2-11	3375049	Oil Filter Wrench
2-15	3376844	Lube Suction O-ring Expander
2-21	3376765	Lubricating Oil Cooler Pressure Test Kit
	3376768	Test Plate
2-22	3375182	Valve Spring Tester
2-26	3376011	DFC Pressure Valve Fixture
2-27	3376012	Valve Mandrell (in Part No. 3376011
		DFC Pressure Valve Fixture
	3376013	Locating Plate (in Part No. 3376011
		DFC Pressure Valve Fixture)
	3375182	Valve Spring Tester
	3375784	Light Duty Puller Kit

General Information (2-01)

Cummins Engine Company, Inc. recommends the use of multi-viscosity lubricating oil, preferably 15W-40, if ambient conditions permit. The oil **must** meet API Classification CC/CD for turbocharged engines.

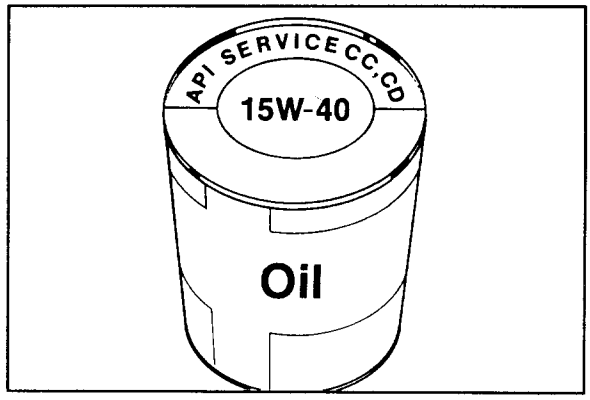

Caution: Limited use of oils, such as 10W or 10W-30, may aid in starting the engine and provide sufficient oil flow at ambient temperatures below -5°C [23°F]. However, the continuous use of low viscosity oils may decrease engine life. Refer to the accompanying chart.

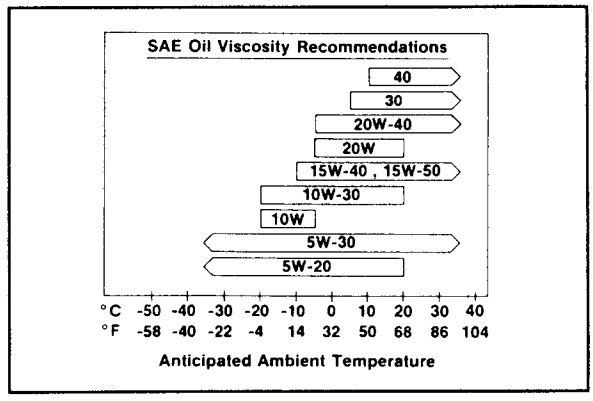

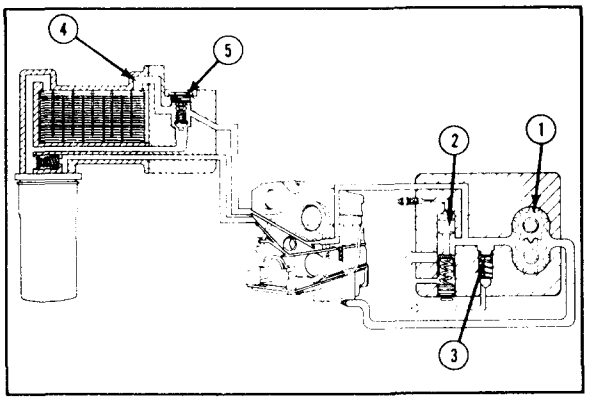

DFC Lubricating System - Operation (2-02)

1. The demand flow and cooling (DFC) lubricating system incorporates:
   - A lubricating oil pump (1) with a pressure sensitive regulator circuit (2) and a high pressure limit valve (3).
   - An oil cooler assembly (4) with a temperature controlled bypass valve (5).

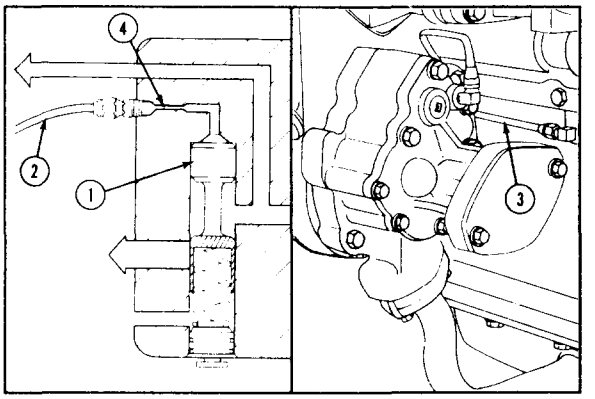

Lubricating Oil Pump Pressure Regulator

1. The pressure regulator (1) senses main oil rifle pressure (2) to maintain the correct oil pressure and flow.
2. An external signal line (3) sends a signal from the main oil rifle through a dampening orifice (4) in the lubricating oil pump cover to the top of the pressure regulator cavity.

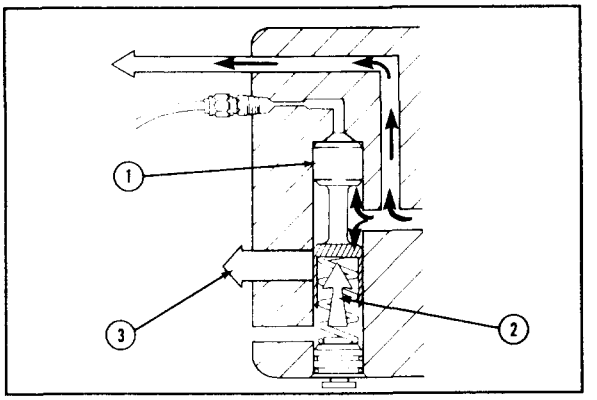

3. The regulator plunger (1) is held in the upward or closed position by spring force (2). The port in the regulator cavity that dumps excessive oil into the oil pan (3) is blocked by the regulator plunger when it is in the closed position.
4. The pressure regulator remains in the closed position until the pressure in the main rifle reaches approximately 275 kPa [40 psi] (345 kPa [50 psi] on industrial engines).

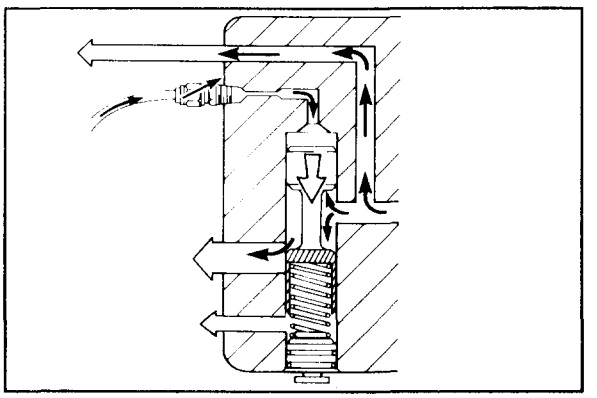

5. At that point, the oil pressure from the main oil rifle, acting against the end of the regulator plunger, overcomes the force of the regulator plunger spring.
6. The pressure regulator plunger moves downward (open), uncovering the dump port in the regulator cavity. This allows any oil in excess of the amount required to maintain 275 kPa [40 psi] (345 kPa [50 psi] on industrial engines) to return to the oil pan.

7. An internal vent drilling (1) in the pressure regulator cavity allows any oil that has leaked past the plunger into the spring cavity to drain back into the oil pan.
8. The regulator plunger remains in the downward or open position until the main oil rifle pressure drops below 275 kPa [40 psi] (345 kPa [50 psi] on industrial engines).

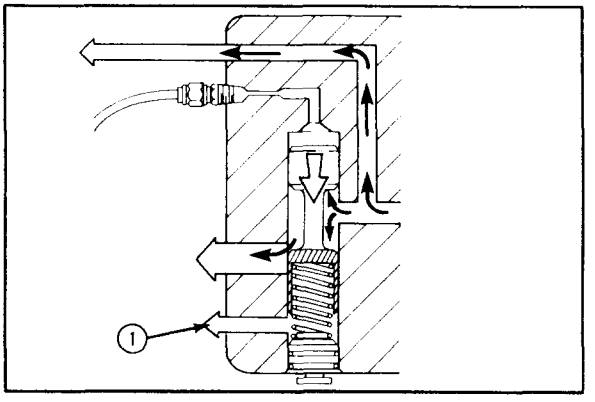

9. At that time, the regulator spring force is high enough to overcome the oil pressure signal from the main rifle. The regulator plunger moves upward or closed once again, blocking off the dump port to the oil pan.

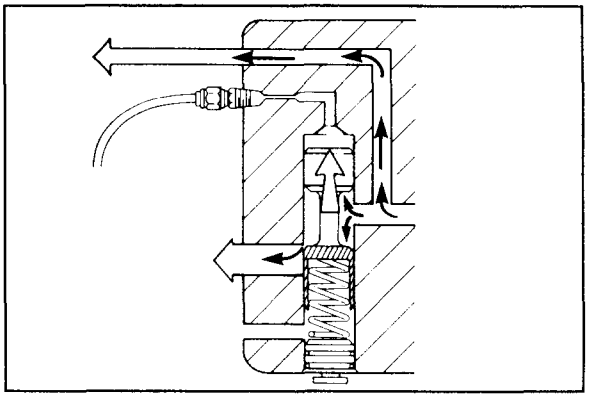

Lubricating Oil Pump High Pressure Limit Valve

1. The high pressure limit valve (1) is held in the closed position by spring force (2). The valve remains in the closed position unless the oil pressure exceeds 965 kPa [140 psi] in the lubricating oil pump.

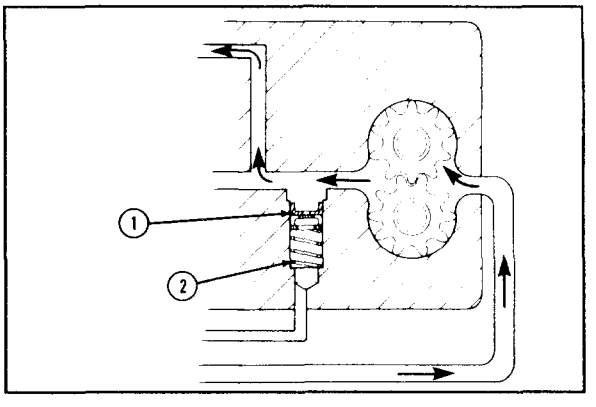

2. When the oil pressure exceeds 965 kPa [140 psi] in the lubricating oil pump, for instance during cold start-up, the oil pressure in the pump overcomes the limit valve spring force.

   This allows the excess oil to return to the oil pan which prevents possible damage to the lubricating system components.

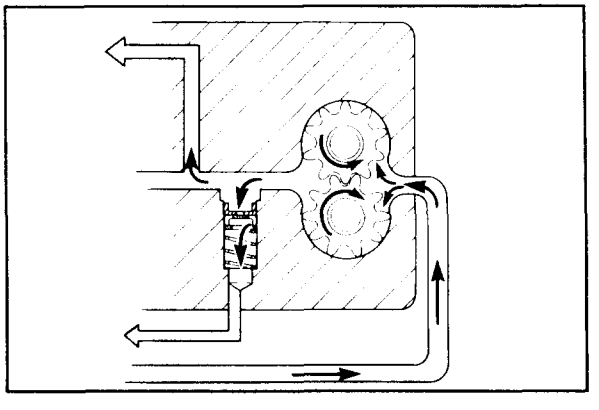

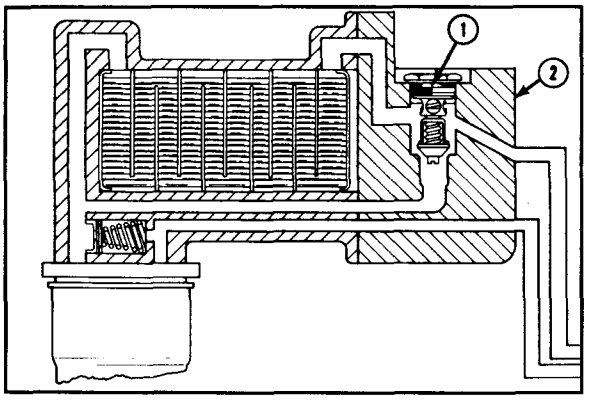

Lubricating Oil Cooler Bypass Valve

1. Oil flow through the oil cooler is controlled by a temperature sensitive bypass valve (1) in the oil cooler support (2).
2. The bypass valve is either open (retracted) or closed (extended), depending on the oil temperature.

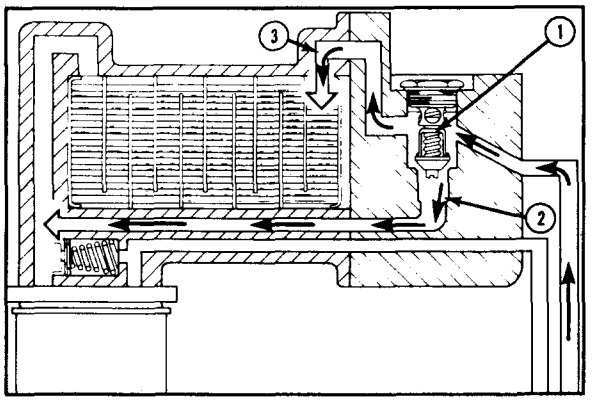

3. When the oil temperature out of the lubricating oil pump is below 110°C [230°F], the bypass valve is in the open (retracted) position (1).
4. With the bypass valve in the open position, approximately 60 percent of the oil from the lubricating oil pump bypasses the cooler through the bypass loop (2) and goes directly to the oil filter head.

   The remaining 40 percent goes through the cooler core (3), and is cooled before it reaches the oil filter head.

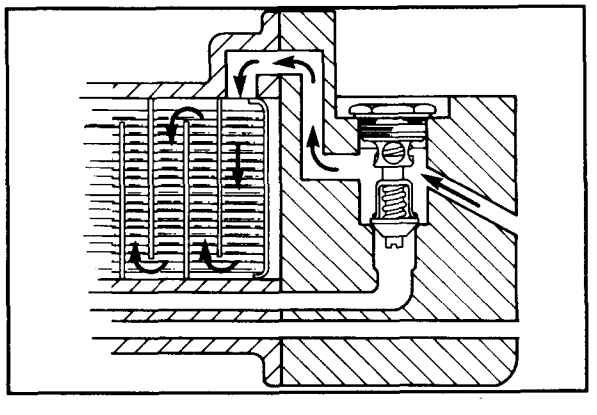

5. When the oil temperature exceeds 110°C [230°F] out of the lubricating oil pump, the bypass valve extends to close the bypass loop in the cooler assembly.

   This forces all of the oil to flow through the cooler core before reaching the filter head.

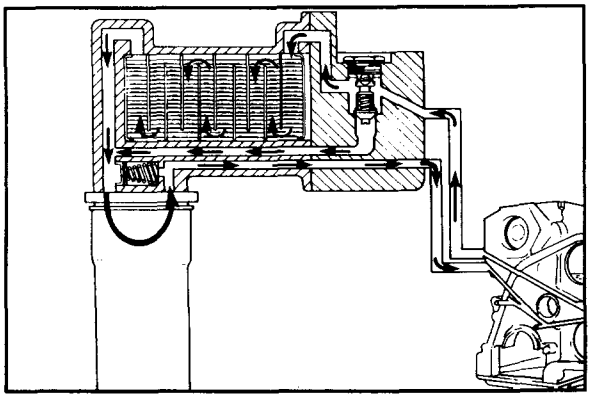

6. After the oil is cooled below 107°C [225°F], the bypass valve once again retracts to open the bypass loop, allowing 50 percent of the oil to bypass the cooler.

Lubricating Oil System Specifications (2-03)

Oil pressure at idle (minimum allowable)	70 kPa [10 psi] minimum
At no load governed speed:	
Automotive	240-310 kPa [35-45 psi]
Industrial	310-380 kPa [45-55 psi]
Oil capacity of standard engine:	
Bypass filter	2.8 litres [0.75 U.S. gal.]
Full flow filter	3.5 litres [0.93 U.S. gal.]
Oil pan capacity (high-low)	34-28 litres [9-7.5 U.S. gal.]
Total system capacity including filters	42 litres [11.0 U.S. gal.]

Lubricating Oil System Flow Diagrams (2-04)

Big Cam III and IV Lubrication System

1. Oil Pump
2. To Lubricating Oil Cooler
3. From Lubricating Oil Cooler
4. Piston Cooling Nozzle
5. Main Oil Rifle
6. Cam Bushings
7. To Overhead
8. Main Bearing
9. Connecting Rod Drilling
10. Rifle Pressure Signal Line

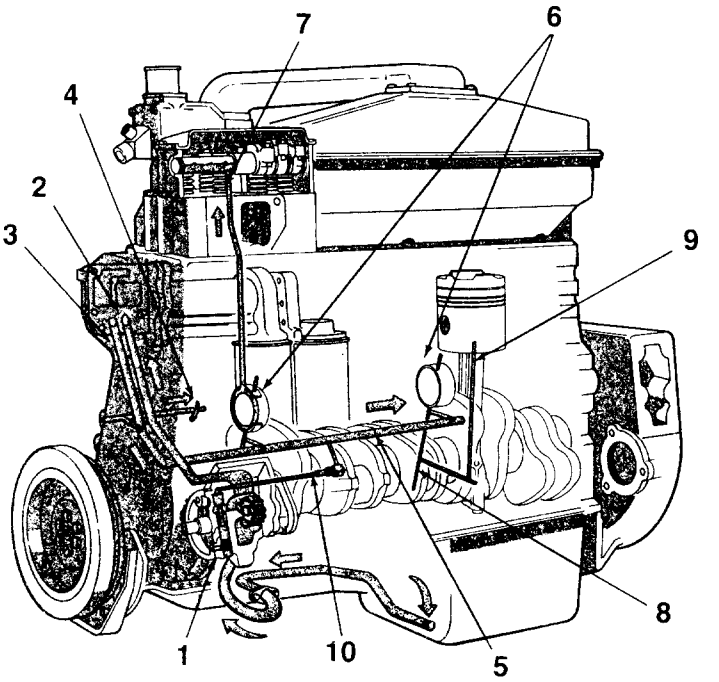

Big Cam III and IV Lubrication System

1. From Oil Pump
2. Oil Cooler Bypass Valve
3. Oil Cooler
4. Full Flow Oil Filter
5. To Main Rifle
6. Bypass Oil Filter
7. Turbocharger Supply
8. Turbocharger Drain

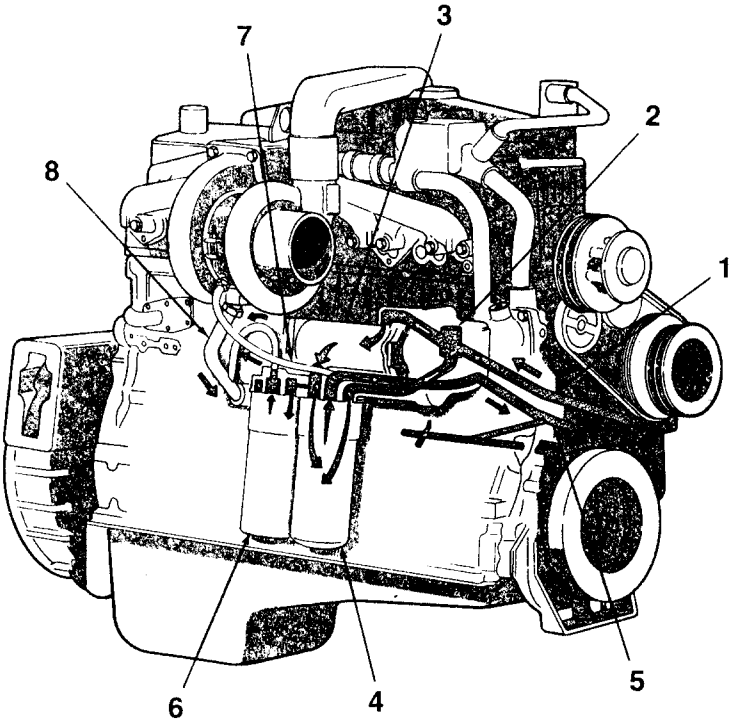

Internal Engine Damage - Check (2-05)

Lubricating Oil Analysis

An analysis of used oil can help diagnose internal engine damage and determine if it was caused by one of the following:

- Intake air filter malfunction.
- Coolant leaks.
- Oil diluted with fuel.
- Metal particles causing wear.

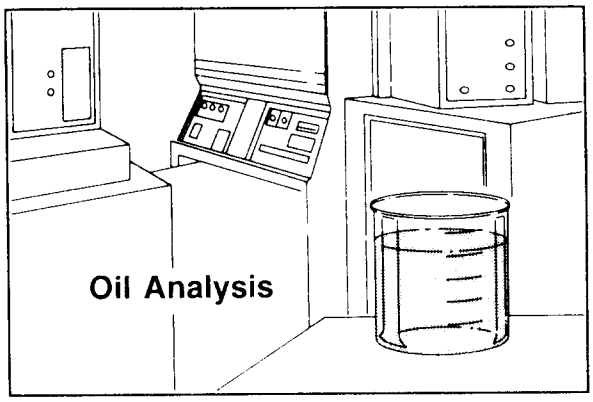

For additional oil analysis information, refer to Diesel Engine Oil Quality and Engine Oil Analysis, Bulletin No. 3810232.

NOTE: Do **not** disassemble an engine for repair based only on the results of an oil analysis. Inspect the oil filters also. If the oil filter shows evidence of internal damage, find the source of the problem and repair the damage. Refer to the appropriate Procedure(s) based on the following oil filter inspection.

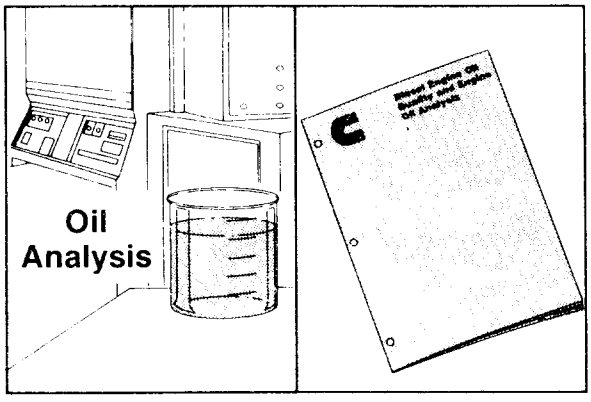

Lubricating Oil Filter Inspection

Caution: Carefully cut the full flow oil filter open. The filter element spring is under compression and can cause personal injury.

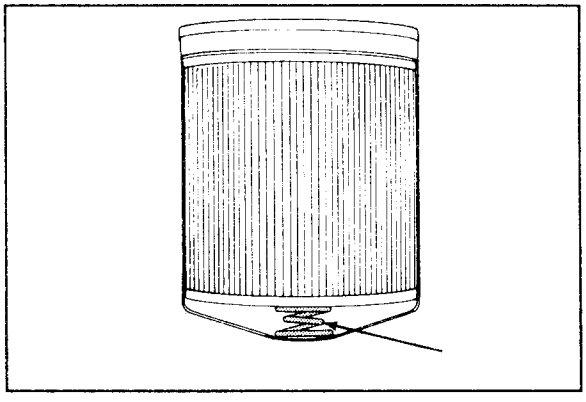

1. Use Part No. 3376579 or 3375301 Tube Cutter to open the full flow oil filter.
2. Inspect the filter element for evidence of moisture or metal particles.

Metal	Probable Source
Copper	Bearings and Bushings
Chromium	Piston Rings
Iron	Cylinder Liners
Lead	Bearing Overlay Material
Aluminum	Piston Wear or Scuffing

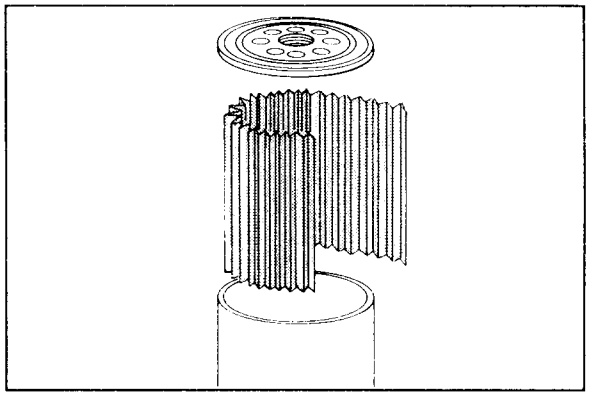

Oil Leaks (External) - Check (2-06)

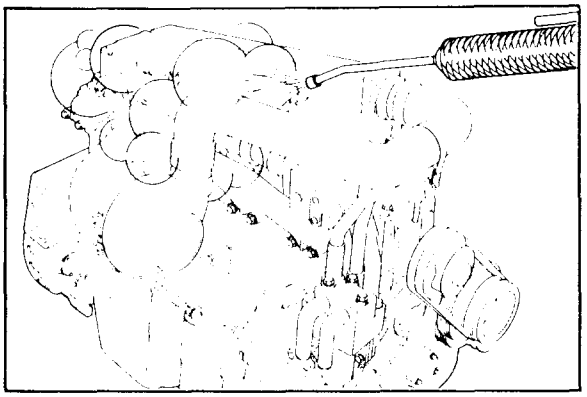

1. Use a steam cleaner or a high pressure washer to clean the engine.

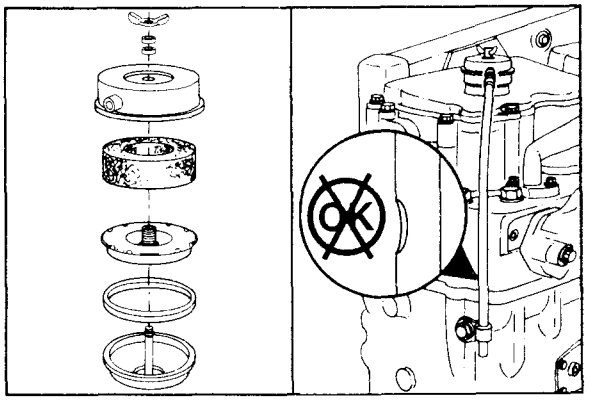

2. Check the engine crankcase breather element, hose, and tube for restriction. Refer to Procedure 2-12.

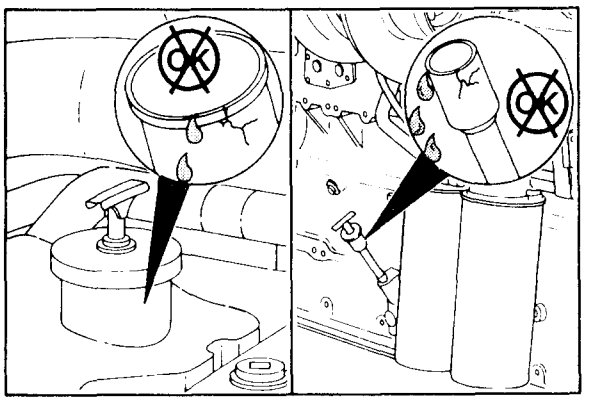

3. Check for a loose or missing oil dipstick tube, dipstick, or oil filler cap.

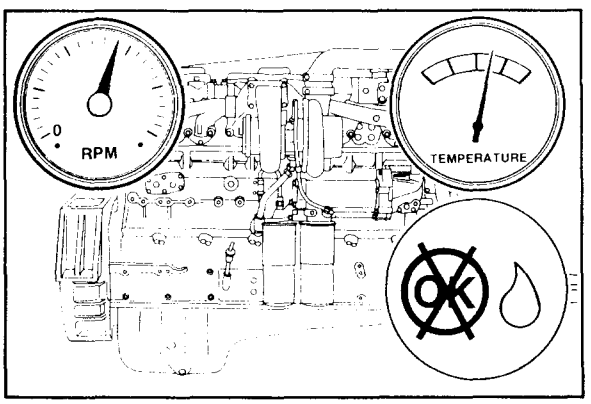

4. Operate the engine until the water temperature reaches 80°C [180°F]. Inspect the exterior of the engine for leaking gaskets, seals, O-rings, pipe plugs, or fittings.

NOTE: Before replacing any gaskets, check the capscrews to make sure they are tightened to the correct torque values. Refer to Section 10 for capscrew torque specifications.

Oil Pressure Gauge - Check (2-07)

Test

1. Check the following for defects:

   a. Electrical wiring broken.
   b. Sending unit malfunction (refer to step No. 2).
   c. Plumbing loose or broken.

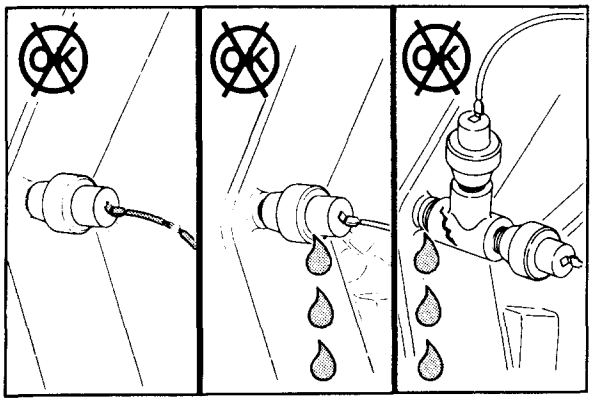

2. Use a master gauge of known accuracy to verify the reading of the suspect gauge.
3. Connect the line from the master gauge to the main oil rifle on the fuel pump side of the engine.
4. Replace the sending unit if it is defecti ve.

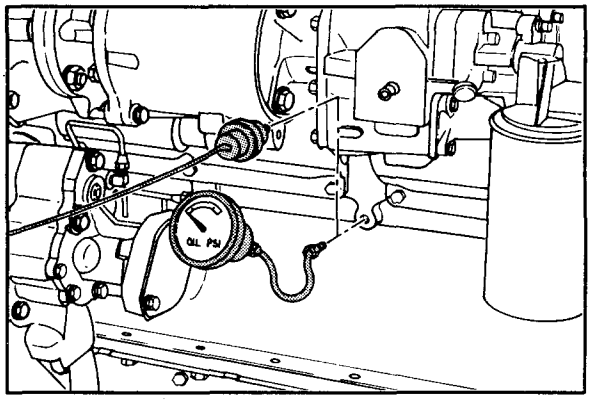

Oil Temperature Gauge - Check (2-08)

Installation

Use Compuchek®, if available, to check the oil temperature gauge. If Compuchek® is **not** available, perform the following steps:

1. Drain the oil from the oil pan. Refer to Procedure 2-09.
2. Remove the pipe plug on either side of the oil pan. Install the oil temperature gauge sending unit.
3. Fill the oil pan with clean 15W-40 oil. Refer to Procedure 2-10.

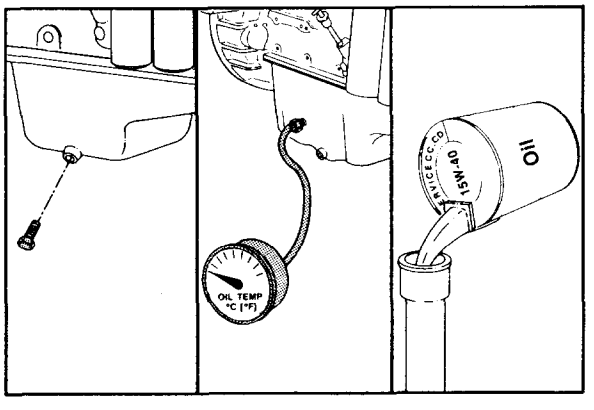

Test

1. Check the following for defects:

   a. Electrical wiring broken.
   b. Sending unit malfunction (refer to step No. 2).

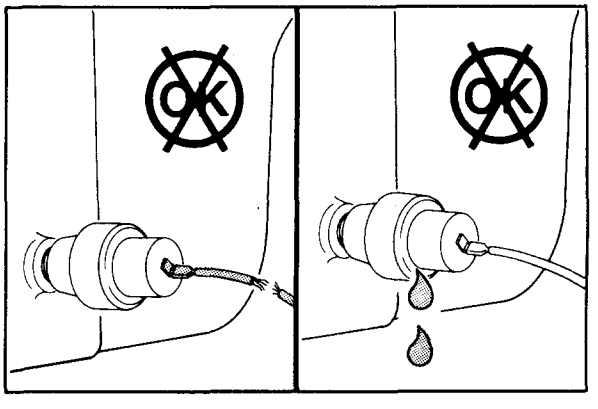

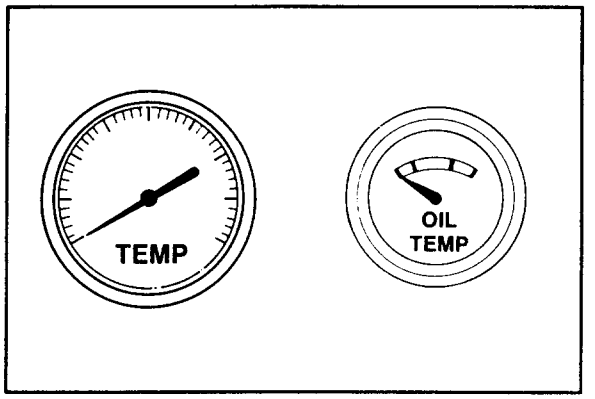

2. Use a master gauge of known accuracy to verify the reading of the suspect gauge.
3. Replace the sending unit or the gauge if it is defective.

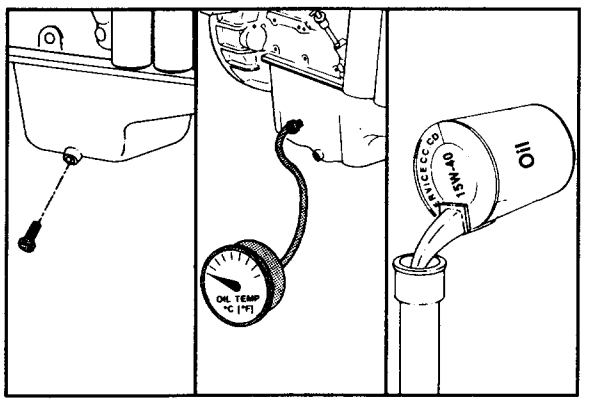

4. Drain the oil from the oil pan, and remove the test gauge.
5. Fill the oil pan with clean 15W-40 oil. Refer to Procedure 2-10.

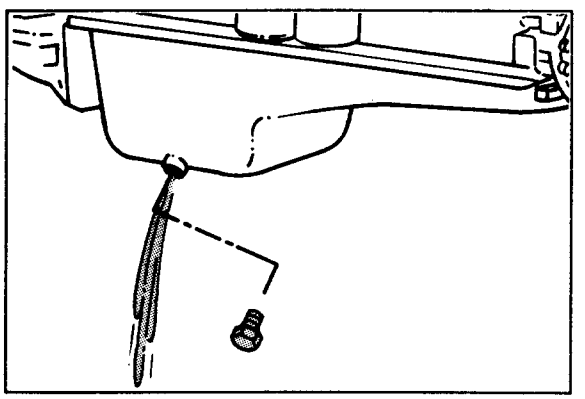

Oil Pan, Drain - (2-09)

Warning: Hot oil can cause serious personal injury.

1. Operate the engine until the water temperature reaches 60°C [140°F]. Shut the engine off. Remove the oil drain plug. Drain the oil immediately to make sure all the oil and suspended contaminates are removed from the engine.

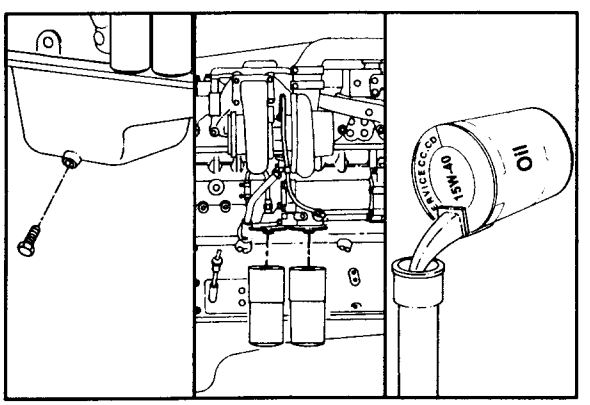

Oil Pan, Fill - (2-10)

1. Install the oil drain plug, and tighten to 90 N•m [65 ft-lbs] torque.
2. Replace the full flow and the bypass filters before putting oil in the engine. Refer to Procedure 2-11.
3. Add the specified amount of clean 15W-40 oil to fill the oil pan. Refer to Reference 2-03 for engine oil capacity.

4. Check the oil level on the dipstick. It **must** be filled to the "H" (high) mark.
5. Operate the engine until the water temperature reaches 80°C [180°F], and check for oil leaks.

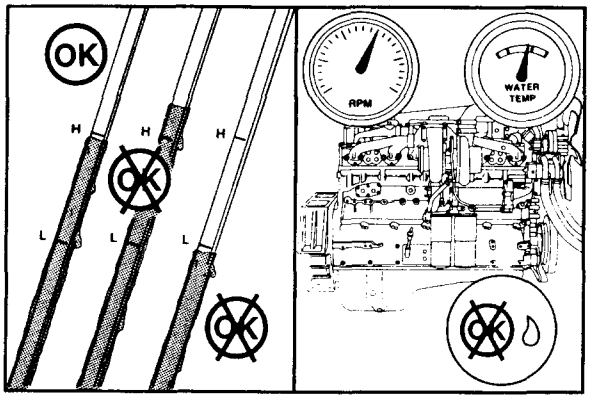

6. Shut the engine off. Wait 5 to 7 minutes for the oil to drain back to the oil pan.
7. Check the oil level. Add oil as necessary to bring the level up to the "H" (high) mark on the dipstick.

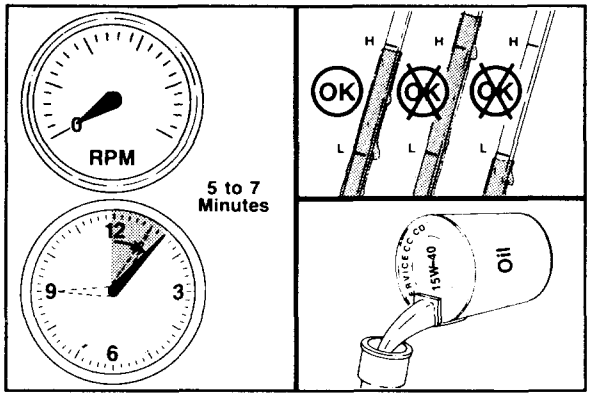

Oil Filters (Full Flow And Bypass) - Replace (2-11)

The external appearance of the full flow (1) and the bypass (2) filters is the same. The accompanying picture identifies the difference between the two filters.

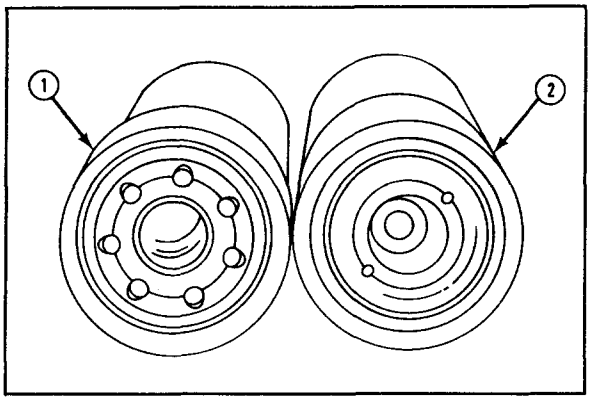

During normal engine operation, oil circulates through the full flow filter and into the oil cooler. If the full flow filter becomes plugged to the point that a 410 kPad [60 psid] difference exists between the inlet and the outlet pressures, the bypass valve opens in the oil filter head and routes unfiltered oil to the oil cooler.

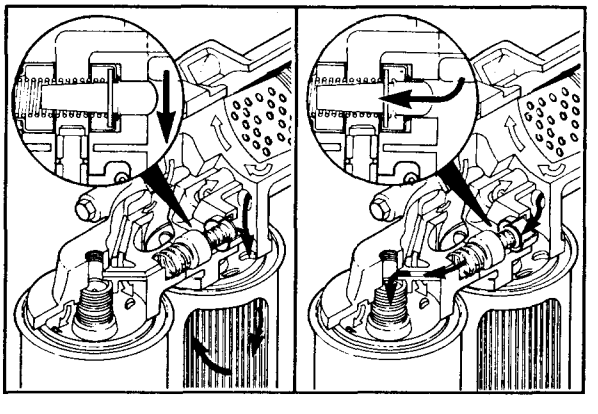

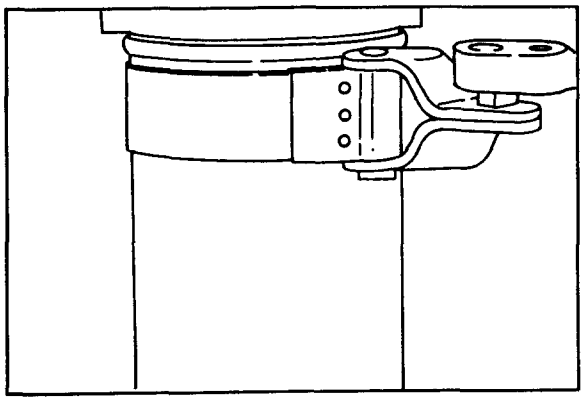

Use the following procedure to replace the oil filters:

1. Use Part No. 3375049 Oil Filter Wrench to remove the filters.

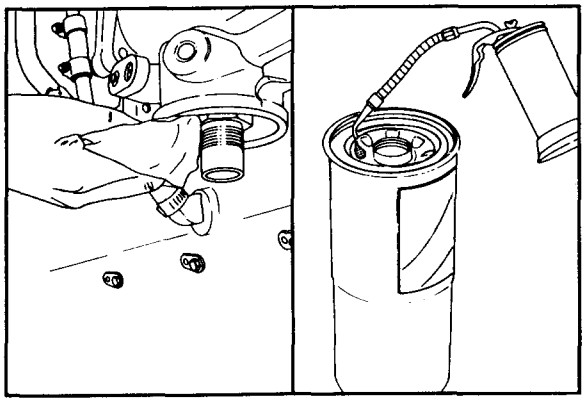

2. Clean the oil filter head surface.
3. Use clean vegetable oil to lubricate the gasket surface of the filters.

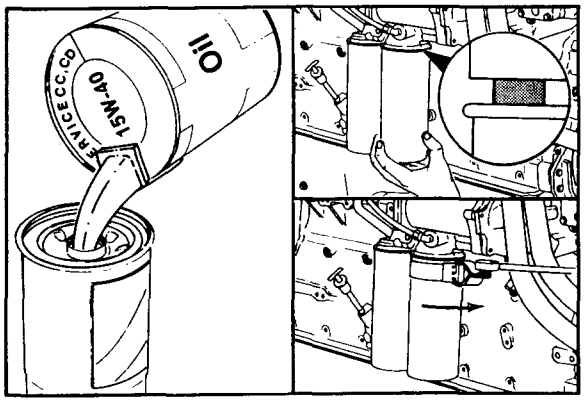

4. Fill the filters with clean 15W-40 oil.
5. Install the filters on the oil filter head. Tighten the filters until the gasket contacts the filter head surface.

Caution: Mechanical overtightening may distort the threads or damage the filter element seal.

6. Use Part No. 3375049 Oil Filter Wrench to tighten the filters an additional three-fourths to one (3/4 to 1) turn, or follow the instructions supplied with the filters.

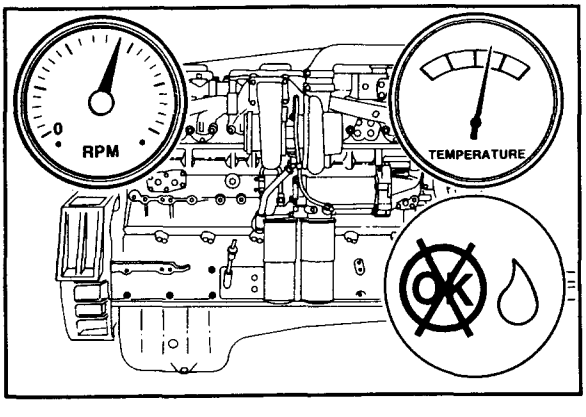

7. Operate the engine, and check for leaks.

Crankcase Breather and Tube - Replace (2-12)

Crankcase Breather - Disassemble

1. Loosen the hose clamp at the breather vent tube.
2. Remove the tube support bracket capscrews and the brackets.
3. Remove the tubes and the hoses from the engine.

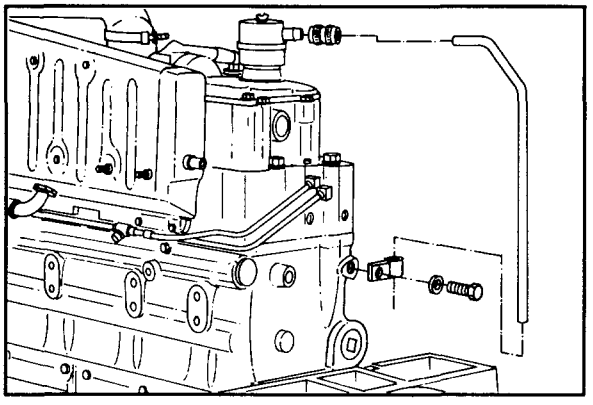

4. Dissassemble the breather as shown (industrial engines only).

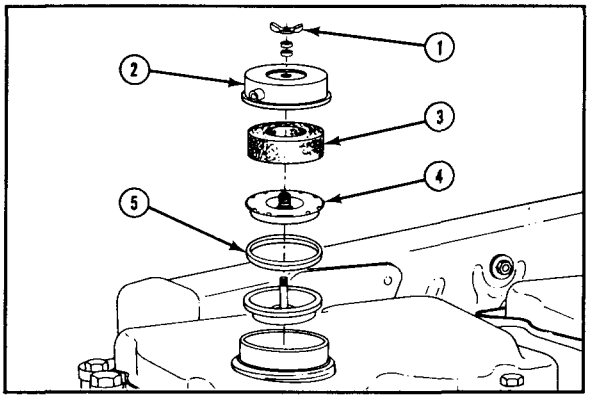

Clean

1. Use solvent to clean the wire mesh breather element and vapor barrier. Dry it with compressed air.

NOTE: Foam-type breather elements and vapor barriers **must** be replaced.

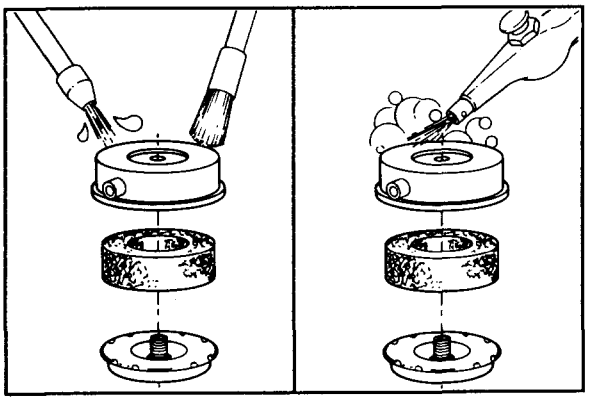

Inspect

1. Inspect the breather element (1), the vapor barrier (2), the rubber gasket (3), the body (4) and the cover (5) for cracks or other damage. Replace if necessary.

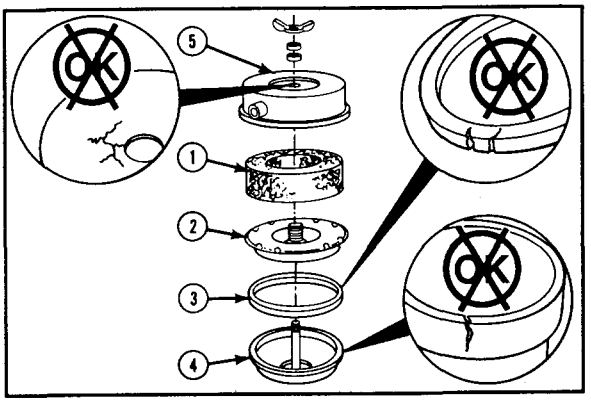

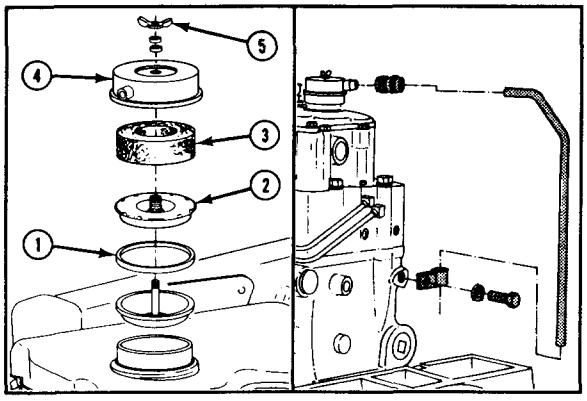

Assemble

1. Assemble the breather as shown, using a new or cleaned breather element and vapor barrier.
2. Install the vent tube, the hose, the hose clamps, the brackets, and the capscrews on the engine.
3. Tighten the capscrews to 25 N•m [20 ft-lbs] torque.

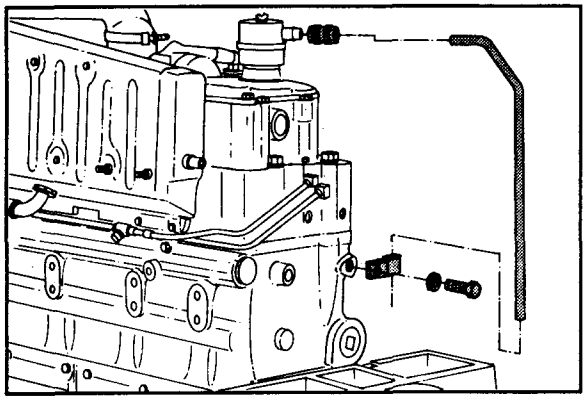

Crankcase Breather Tube - Remove

1. Loosen the hose clamp at the breather vent tube.
2. Remove the tube support bracket capscrews and the brackets.
3. Remove the tubes and the hoses from the engine.

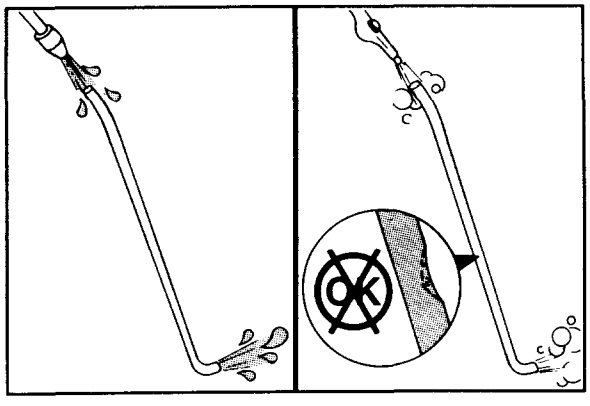

Clean

1. Use solvent to clean the inside of the crankcase breather tube, and dry with compressed air.

Inspect

1. Use air pressure to blow through the vent tube.
2. Replace the vent tube if it is clogged.

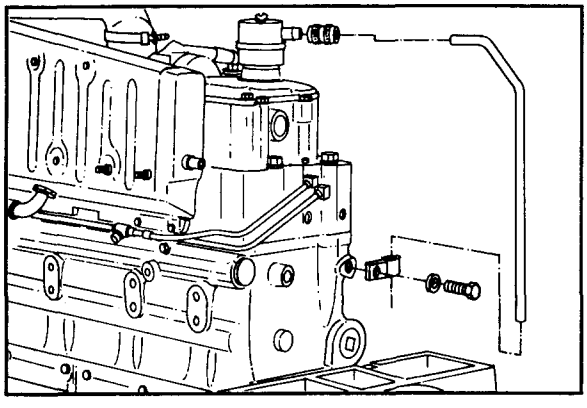

Install

1. Install the vent tube, the hose, the hose clamps, the brackets, and the capscrews on the engine.
2. Tighten the capscrews to 25 N•m [20 ft-lbs] torque.
3. Install the hose on the breather, and tighten the hose clamps to 5 N•m [40 in-lbs] torque.

Dipstick Tube And Housing - Replace (2-13)

Remove

1. Remove the four capscrews and the housing.

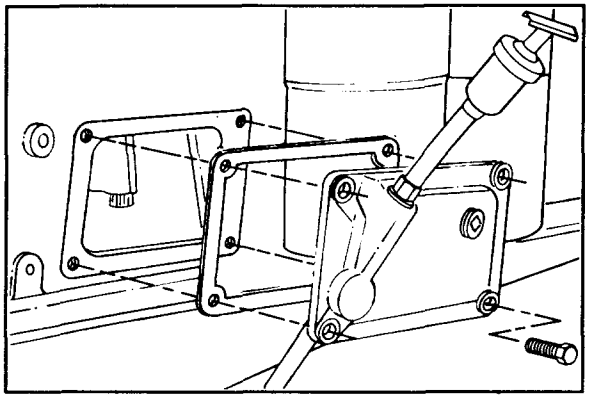

Clean and Inspect

1. Clean the housing gasket surface.
2. Clean the cylinder block gasket surface.

NOTE: Do **not** cut the gasket mounting surface with the scraper.

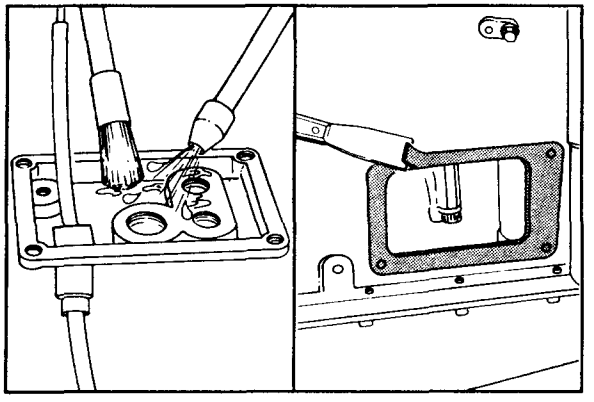

3. Inspect the dipstick guide tube.

NOTE: If the guide tube is cracked, missing or **not** angled downward in the oil pan, replace the dipstick tube housing.

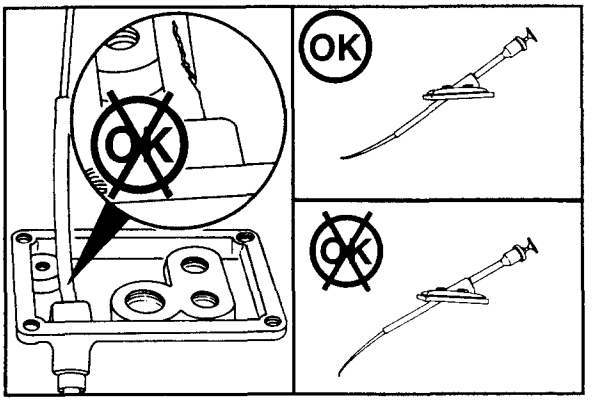

Install

1. Install a new gasket and the dipstick tube housing.
2. Install the four capscrews, and tighten to 45 N•m [35 ft-lbs] torque.

NOTE: Check the dipstick calibration. Refer to Reference 2-03 for engine oil capacity.

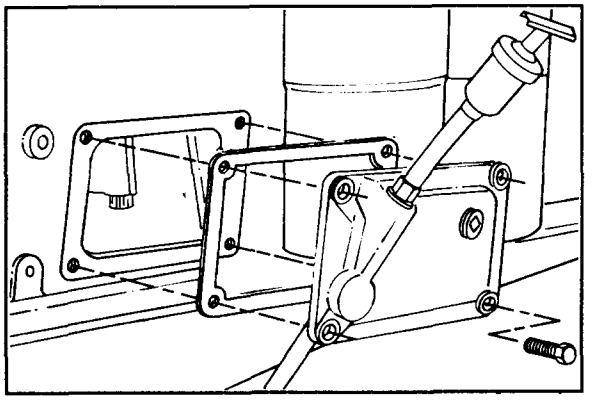

Dipstick - Calibrate (2-14)

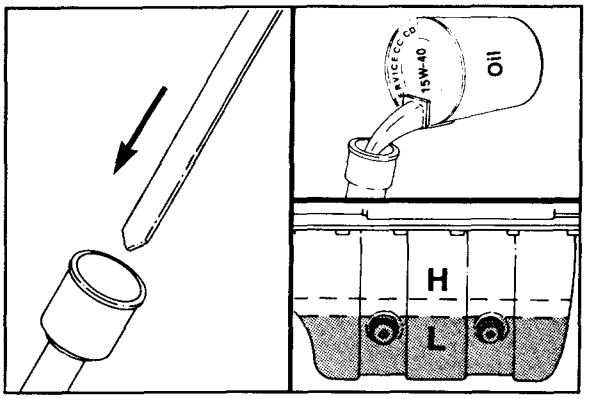

1. Install the dipstick in the dipstick tube housing.
2. Use clean 15W-40 oil to fill the oil pan to the specified "LOW" oil level. Refer to Reference 2-03 for engine oil capacity.

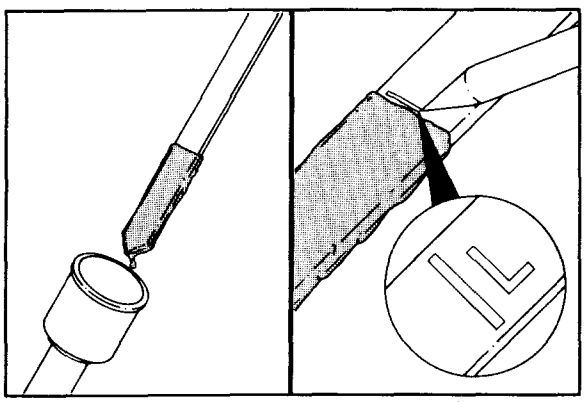

3. Remove the dipstick, and scribe a mark across the dipstick. Mark the "LOW" oil level with an "L".

NOTE: The dipstick will break if the scribe mark is too deep.

NOTE: If a new blank dipstick is being used, cut the dipstick off approximately 38 mm [1.5 inches] below the "LOW" oil level mark.

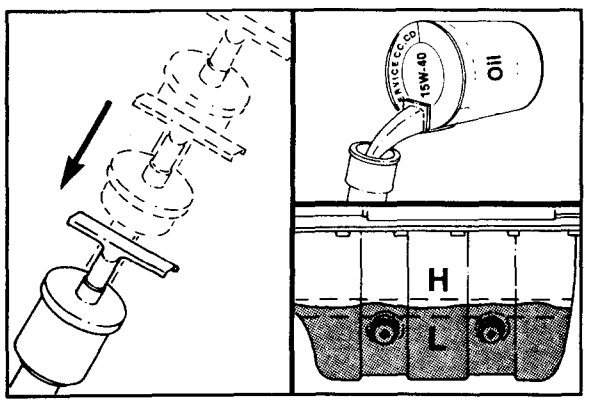

4. Install the dipstick in the dipstick tube housing.
5. Fill the oil pan to the specified "HIGH" oil level. Refer to Reference 2-03 for engine oil capacity.

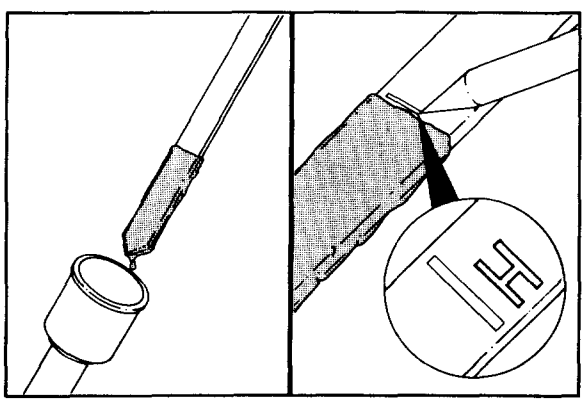

6. Remove the dipstick, and scribe a mark across the dipstick. Mark the "HIGH" oil level with an "H".

NOTE: The dipstick will break if the scribe mark is too deep.

Oil Transfer Tube - Replace (2-15)

Remove

1. Remove the two capscrews from the flange at the oil pan and also the two capscrews from the flange at the lubricating oil pump.
2. Remove the lubricating oil transfer tube.

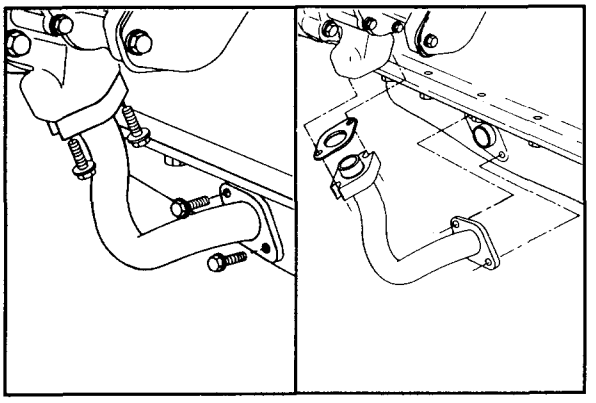

3. Remove and discard the O-ring from the oil pan suction tube and the rectangular sealing ring from the mounting flange.

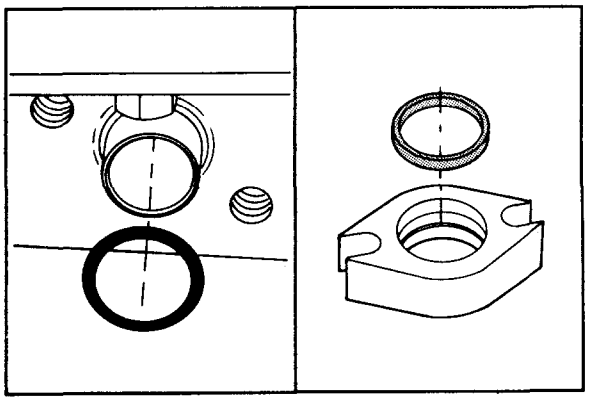

Clean and Inspect

1. Clean the lubricating oil transfer tube and the mounting flanges with solvent.
2. Dry with compressed air.
3. Visually inspect the tube and the flanges for cracks, corrosion, or other damage.

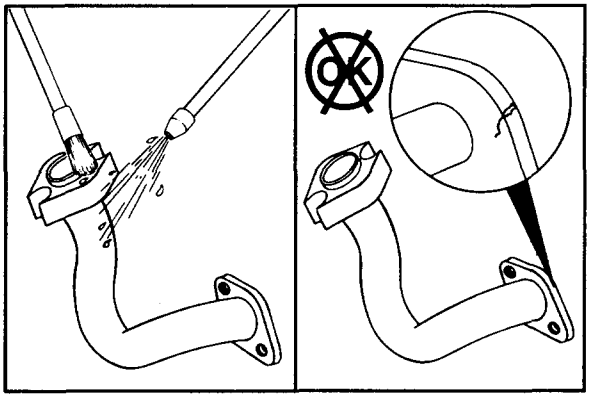

Install

1. Install a new rectangular sealing ring in the lubricating oil transfer tube flange which attaches to the lubricating oil pump.
2. Use clean 15W-40 oil to lubricate the seal.
3. Install Part No. 3376844 Lube Suction O-ring Expander into the end of the lubricating oil transfer tube, and push the tube through the flange. Remove the O-ring expander from the suction tube.

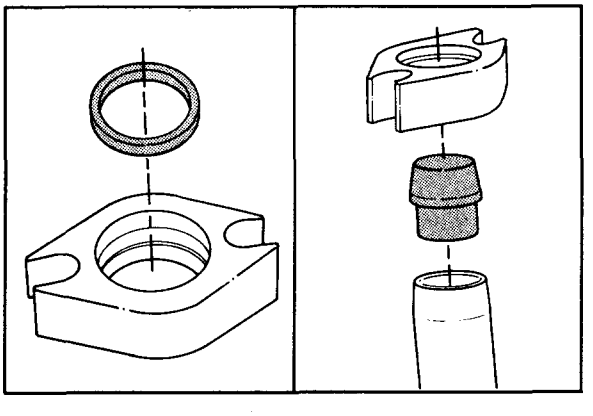

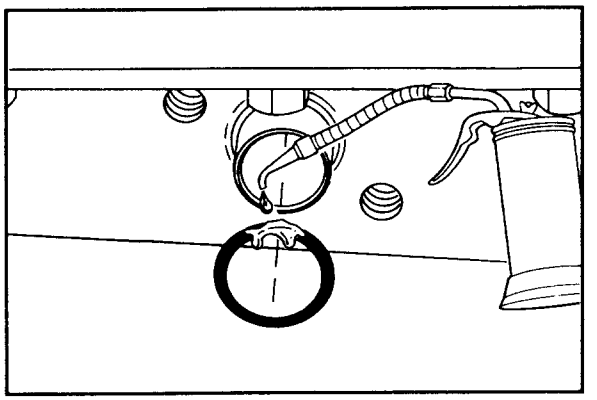

4. Install a new O-ring on the oil pan lubricating oil suction tube.
5. Use clean vegetable oil to lubricate the O-ring.

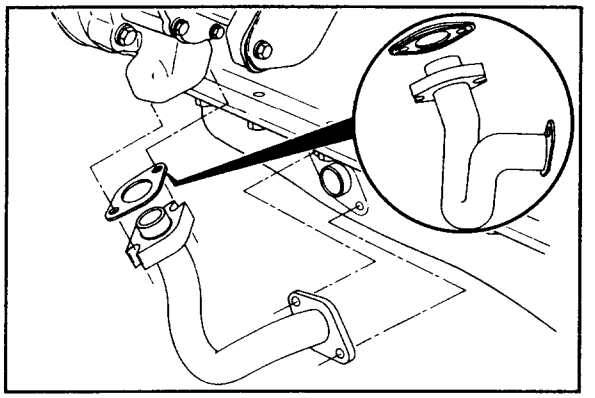

6. Loosely assemble the lubricating oil transfer tube, the flanges, the O-rings, the gaskets, and the mounting capscrews to the oil pan and the lubricating oil pump.

NOTE: The printed side of the mounting flange gasket on the oil transfer tube **must** be toward the flange.

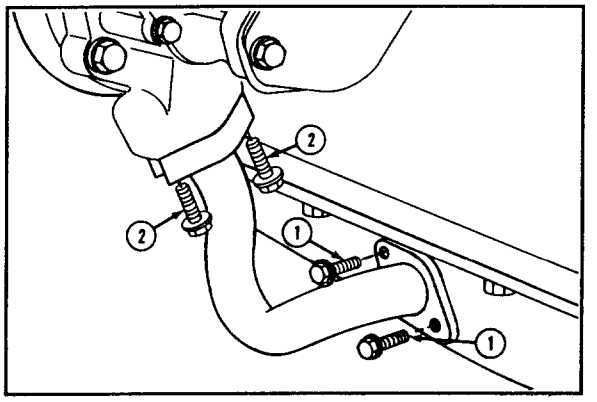

7. Tighten the capscrews in the following sequence:
   - First, tighten the two capscrews (1) at the oil pan to 45 N•m [35 ft-lbs] torque.
   - Second, tighten the capscrews (2) at the lubricating oil pump to 45 N•m [35 ft-lbs] torque.

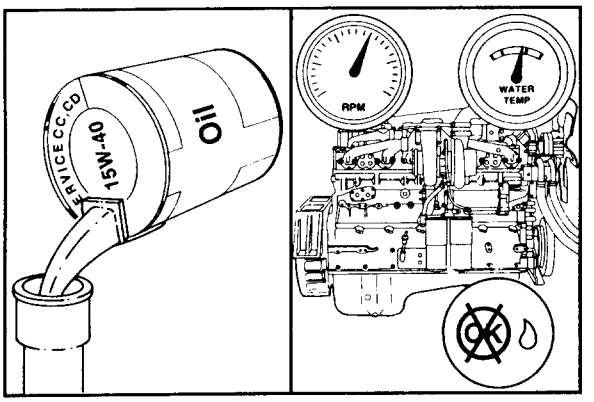

8. Fill the engine with clean 15W-40 oil. Refer to Reference 2-03 for engine capacity.
9. Operate the engine until the water temperature reaches 80°C [180°F], and check for oil leaks.

Oil Pan - Replace (2-16)

Remove

1. Drain the lubricating oil. Refer to Procedure 2-09.
2. Remove the capscrews and the lubricating oil transfer tube.

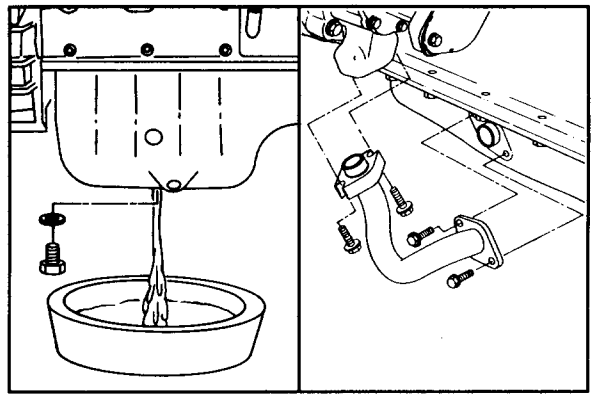

Clean and Inspect

1. Remove the oil pan mounting capscrews and the oil pan.
2. Steam clean the oil pan, and dry it with compressed air.

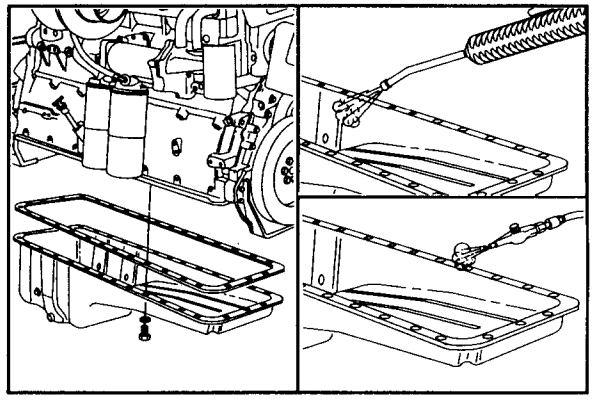

3. Remove all gasket material from the cylinder block and the oil pan surfaces.
4. Inspect the inside and the outside of the oil pan for cracks around the suction tube mounting studs.
5. Check for a cracked or broken suction tube mounting clip.

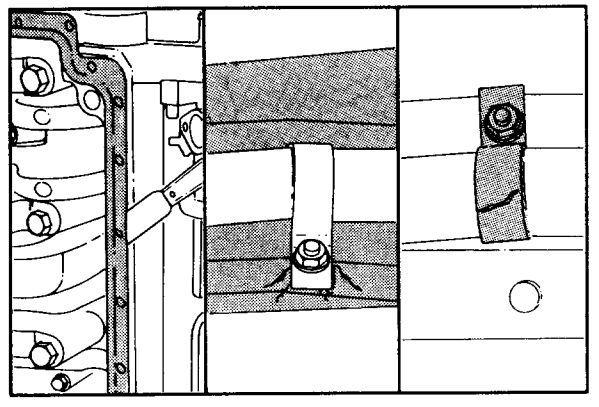

Install

NOTE: The silicone printed side of the gasket must be toward the oil pan.

1. Use a contact adhesive to attach a new gasket to the oil pan.
2. Install the oil pan on the cylinder block. Use your fingers to install and tighten all the mounting capscrews.

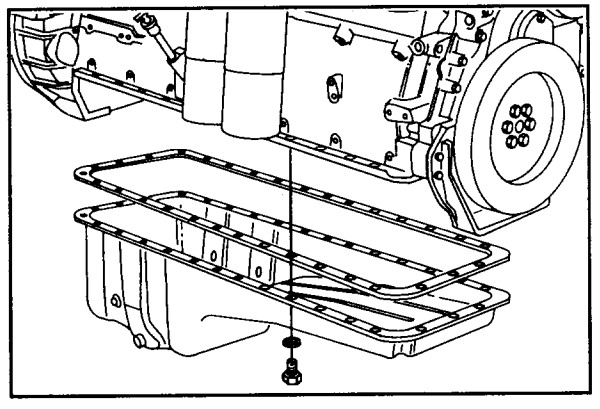

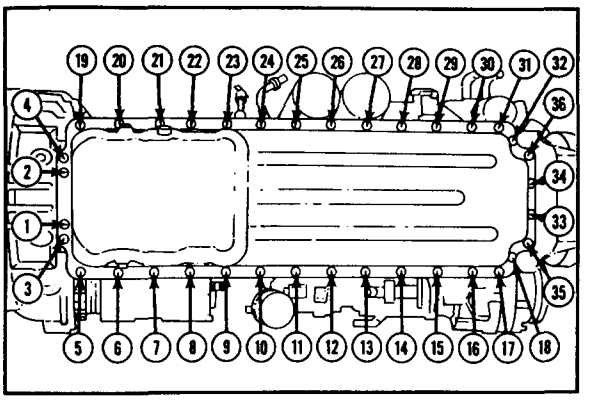

3. Use your fingers to install and tighten one of the 7/16-inch oil pan mounting capscrews on each side of the oil pan, halfway between the front and the rear of the oil pan.

4. Tighten the four 5/16-inch capscrews in the rear of the oil pan to 25 N•m [20 ft-lbs] torque in the sequence shown.

5. Tighten the thirty-two (32) 7/16-inch capscrews to 70 N•m [50 ft-lbs] torque in the sequence shown.

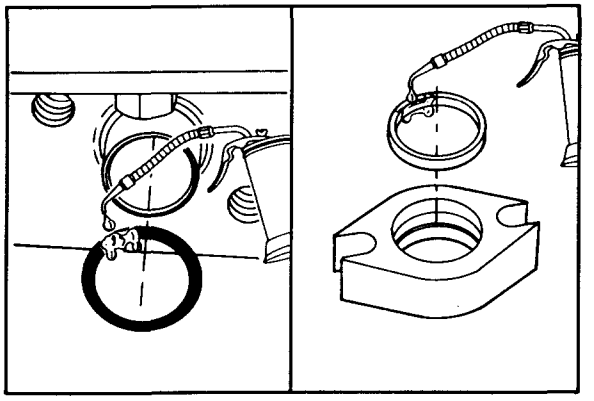

6. Install a new O-ring on the oil pan lubricating oil suction tube and a new rectangular sealing ring in the lubricating oil transfer tube mounting flange. Refer to Procedure 2-15.

7. Use clean vegetable oil to lubricate the O-ring and the seal.

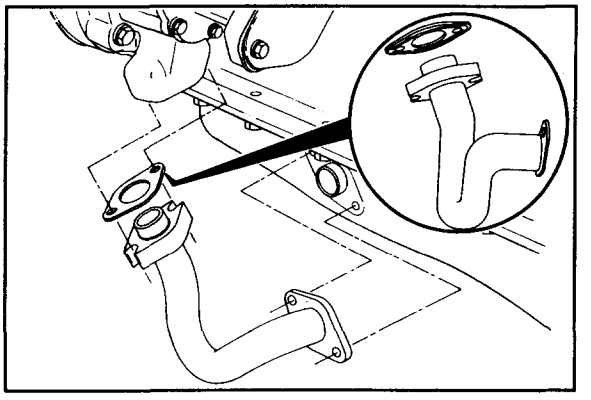

8. Loosely assemble the lubricating oil transfer tube, the flanges, the O-rings, the gaskets, and the mounting capscrews to the oil pan and the lubricating oil pump.

NOTE: The printed side of the mounting flange gasket on the oil transfer tube must be toward the flange.

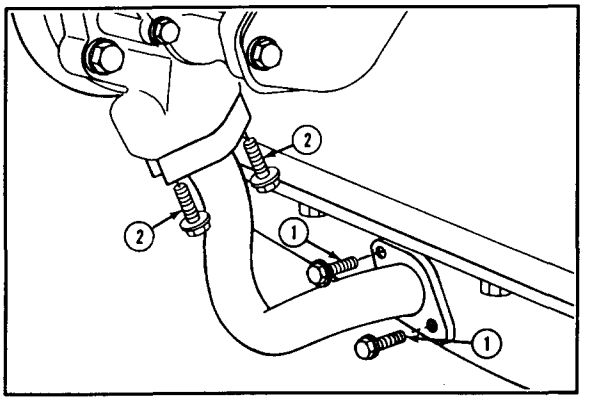

9. Tighten the capscrews in the following sequence:

- First, tighten the two capscrews at the oil pan to 45 N•m [35 ft-lbs] torque.
- Second, tighten the capscrews at the lubricating oil pump to 45 N•m [35 ft-lbs] torque.

10. Fill the engine with clean 15W-40 oil. Refer to Reference 2-03 for engine capacity.
11. Operate the engine until the water temperature reaches 80°C [180°F], and check for oil leaks.

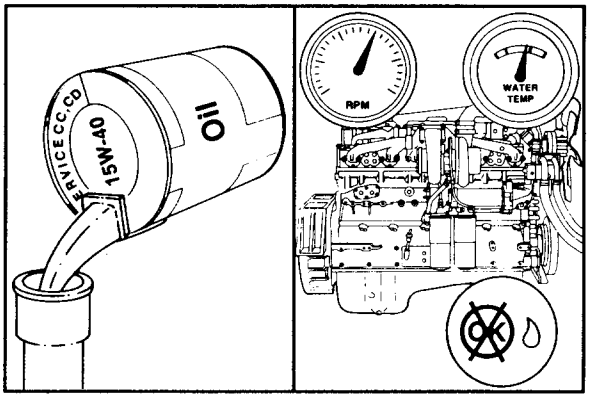

Oil Cooler Bypass Valve - Check (2-17)

Remove

1. Remove the two capscrews and the bypass valve. Discard the O-ring.
2. Visually inspect the valve for damage.

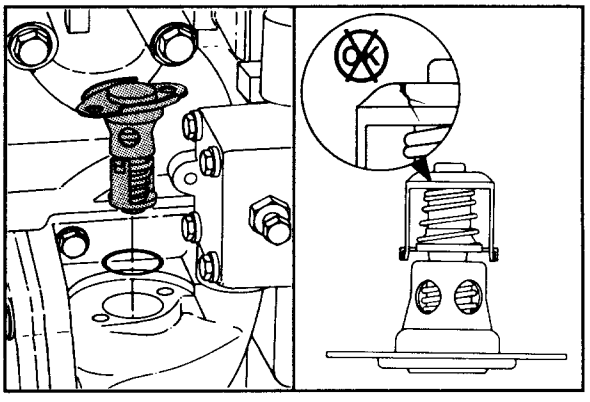

Check

Caution: The flash point of new lubricating oil is approximately 220°C [430°F]. Do not allow oil temperature in the container to exceed 150°C [300°F]. Do not allow water droplets to enter the container of hot oil. Water droplets will cause a violent reaction which can cause personal injury.

1. Suspend the valve and a 115°C [240°F] thermometer in a container of new lubricating oil. Do **not** allow the valve or the thermometer to touch the sides of the container.
2. Heat the lubricating oil.

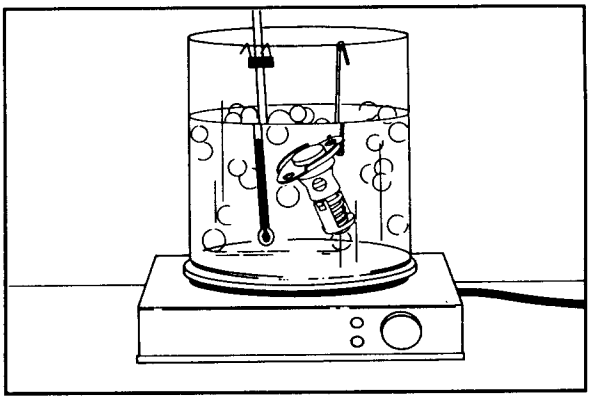

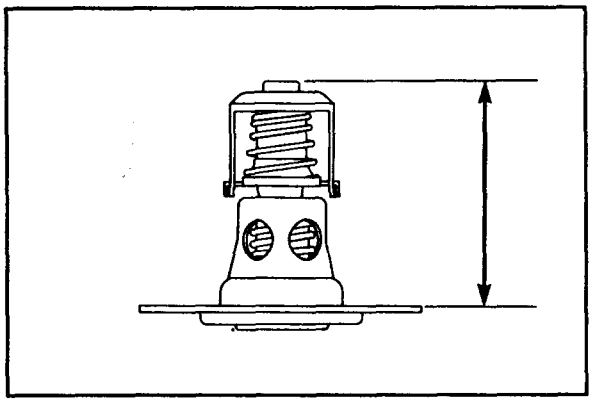

NOTE: Write down the temperature at which the valve is fully extended. The valve **must** be fully extended to at least 70.36 mm [2.770 inches] when the temperature reaches 112°C [234°F].

3. Replace the valve if it does **not** operate as described.

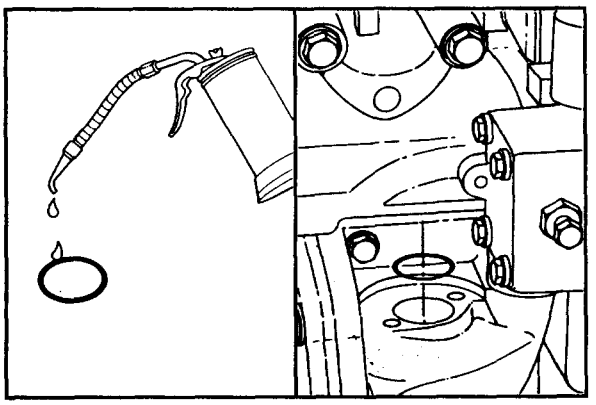

Install

Caution: Do not install the O-ring on the control valve and then try to pull the control valve into position with the capscrews. The sharp corners of the counterbore will cut the O-ring.

1. Lubricate the O-ring with vegetable oil, and install it in the oil cooler support.

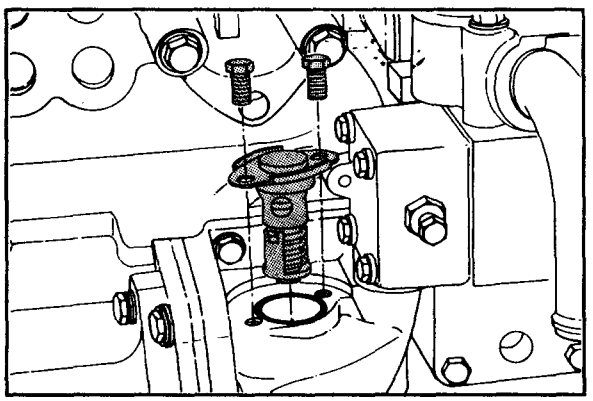

2. Install the valve in the oil cooler support, and push it in position. Tighten the capscrews to 40 N•m [30 ft-lbs] torque.

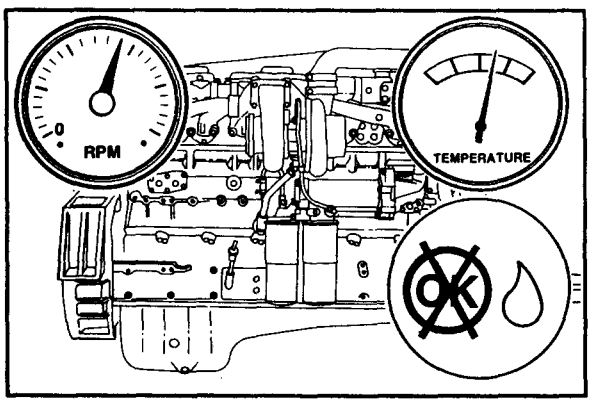

3. Operate the engine until the water temperature reaches 80°C [180°F], and check for oil leaks.

Oil Filter Head - Replace (2-18)

Remove

1. Drain the cooling system. Refer to Procedure 1-06.
2. Remove the oil filters. Refer to Procedure 2-11.

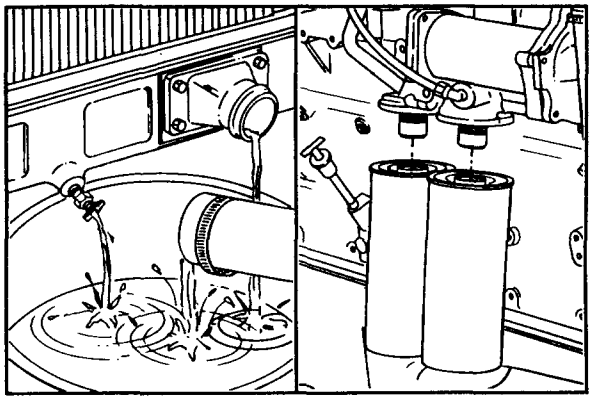

3. Remove the oil cooler assembly. Refer to Procedure 2-19.

Caution: Excessive clamping pressure can distort or crack the oil cooler housing.

4. Clamp the oil cooler assembly in the vertical position with a vise. The jaws of the vise **must** have copper plates to prevent damage to the cooler housing.

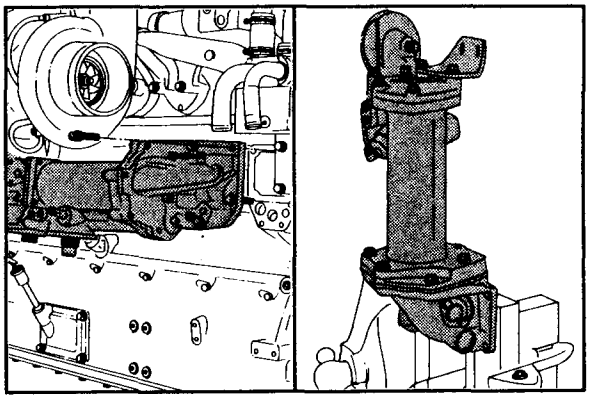

5. Remove the six filter head capscrews and the filter head.
6. Remove the O-ring and the gasket.

NOTE: The compression spring (1) for the pressure sensing piston is **not** secured in the bypass oil filter head. Do **not** lose the spring during removal of the filter head.

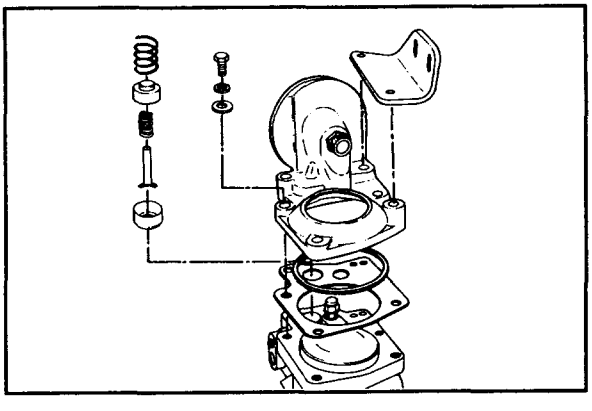

Clean and Inspect

1. Clean the filter head and the cooler housing gasket surfaces.
2. Use solvent to clean the filter head and the cooler housing. Dry with compressed air.

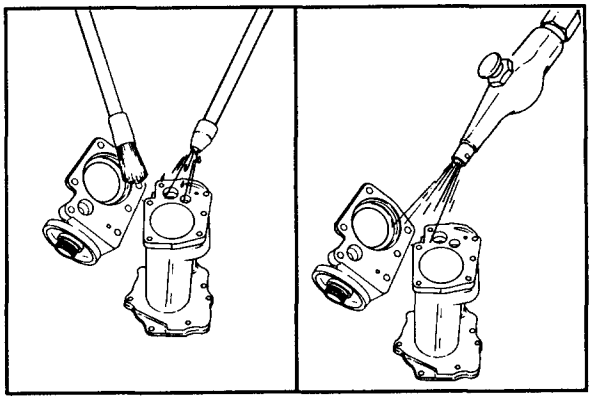

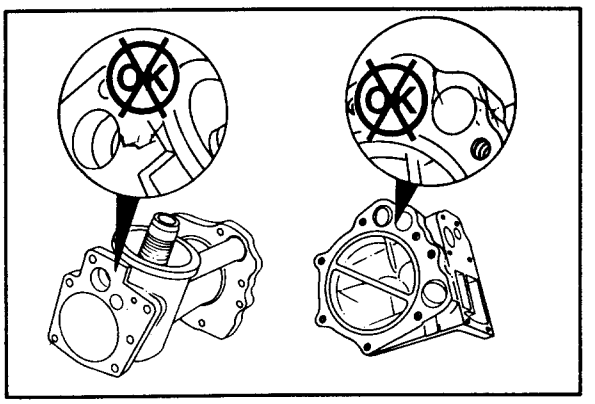

3. Visually inspect the filter head and the housing for cracks or other damage.

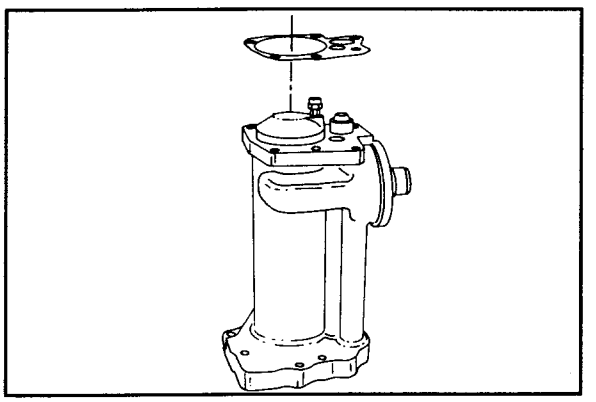

Install

1. Install a new oil cooler cover gasket on the cooler housing. Align the holes in the gasket with the holes in the housing.

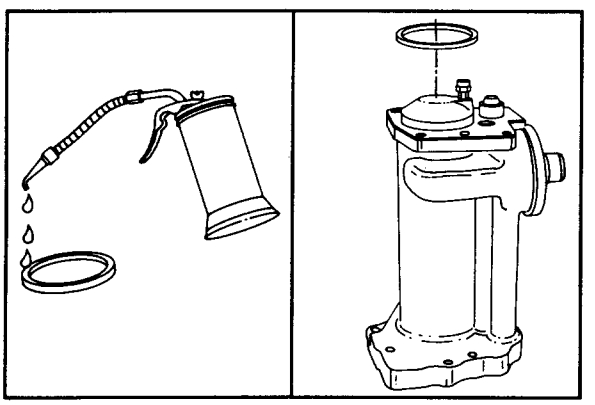

2. Lubricate the rectangular sealing ring with vegetable oil prior to assembly.
3. Install the rectangular sealing ring over the end of the cooler core. Make sure the ring fits tightly against the gasket.

NOTE: Do **not** use lubricating oil on the rectangular sealing ring. The sealing ring will increase in size when in contact with lubricating oil. Use vegetable oil to lubricate the sealing ring.

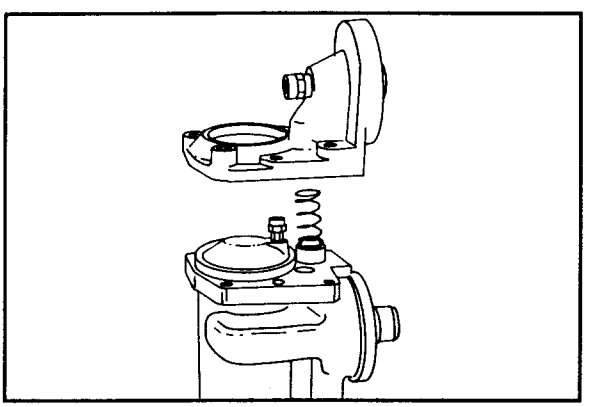

4. Install the compression spring on top of the pressure sensing piston.
5. Install the bypass filter head over the end of the cooler element. Make sure the compression spring is located in the filter head bore.

6. Move the filter head assembly up and down to make sure the pressure sensing piston moves freely in the housing bore.
7. Use your hand to press the filter head down over the end of the oil cooler element until the head contacts the gasket.

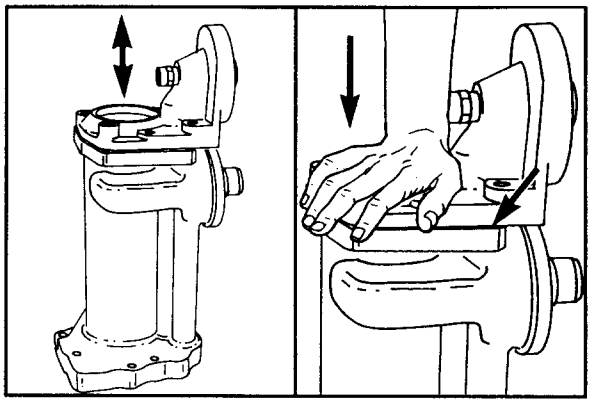

8. Hold the filter head in this position, and install the center capscrew on each side of the filter head. Use your fingers to tighten the two capscrews. Install the remaining four capscrews, and tighten all six capscrews to 45 N•m [35 ft-lbs] torque.
9. Install the oil cooler. Refer to Procedure 2-19.

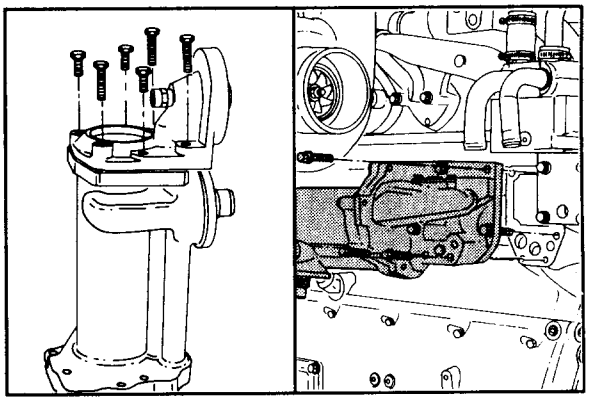

10. Fill the cooling system with coolant. Refer to Procedure 1-07.
11. Operate the engine until the water temperature reaches 80°C [180°F], and check for coolant or oil leaks.

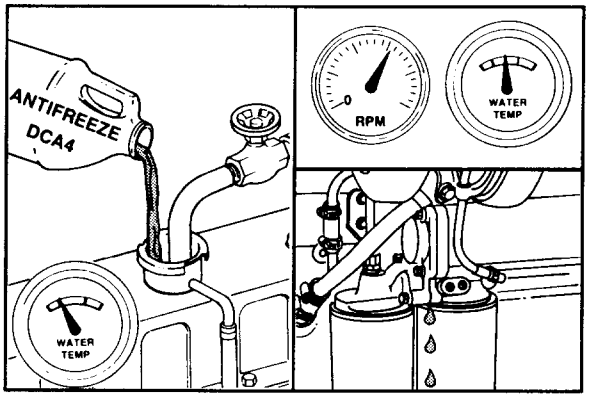

Oil Cooler Assembly - Replace (2-19)

Remove

1. Drain the cooling system. Refer to Procedure 1-06.
2. Remove the turbocharger oil supply tube and the bypass filter return tube.

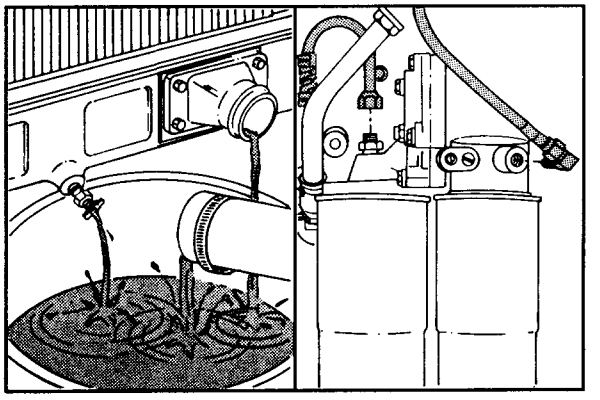

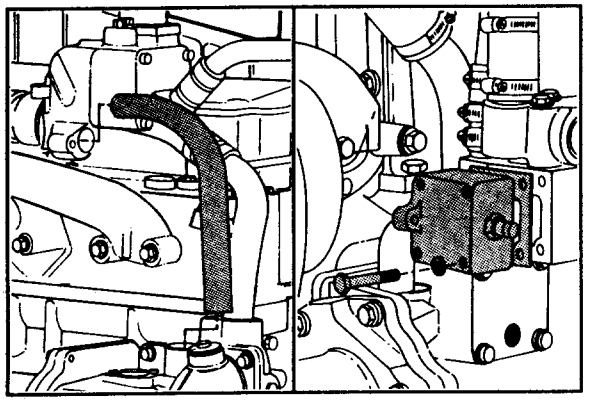

3. On Big Cam III engines, remove the capscrew which holds the water transfer tube to the thermostat housing. Remove the water transfer tube.
4. On Big Cam IV engines, remove the four capscrews which hold the water transfer cover to the thermostat housing. Remove the cover and the water transfer tube.

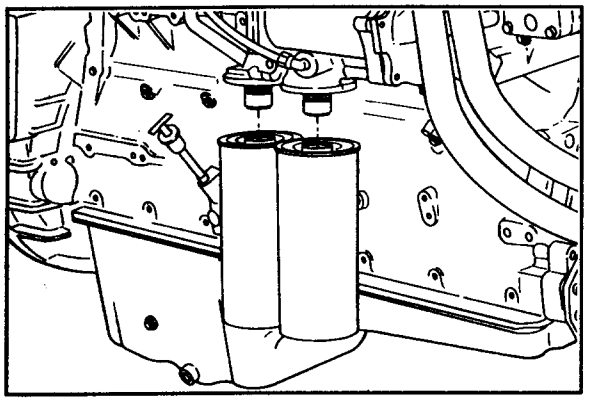

5. Remove the full flow filter and the bypass filter.

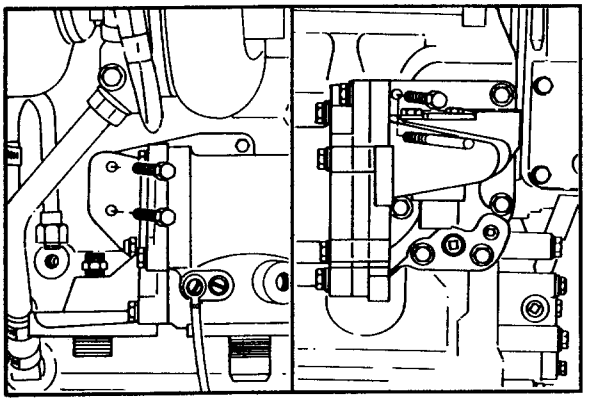

6. Remove the wire from the filter plugging alarm (if equipped).
7. Remove the two capscrews which hold the oil cooler brace to the cylinder block at the rear of the cooler.
8. Remove one of the capscrews which holds the oil cooler support to the cylinder block. Install a guide stud in the hole.

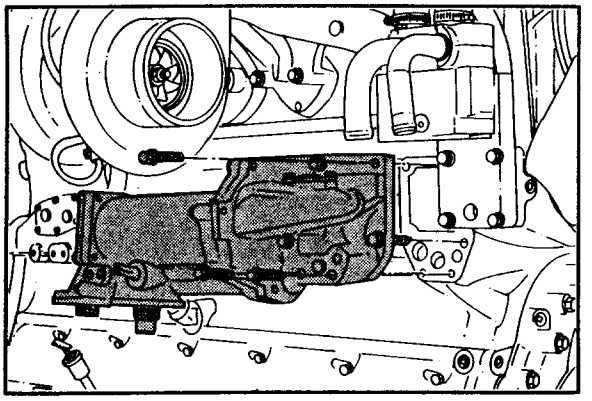

9. Remove the remaining five capscrews from the oil cooler support, and remove the cooler assembly.

Clean

1. Clean the gasket material from the cooler support and the cylinder block.
2. After removing the gasket material, use solvent and dry with compressed air.

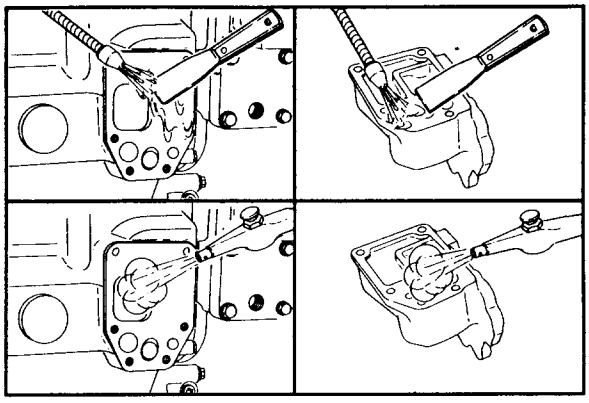

Install

1. Install two guide studs in the oil cooler support mounting holes in the cylinder block.
2. Install a new oil cooler support gasket over the guide studs.

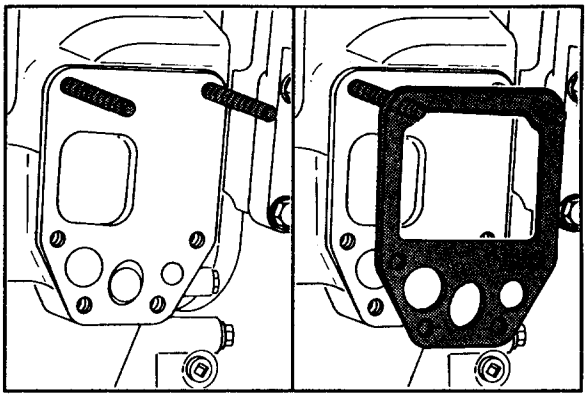

3. Put the oil cooler assembly over the guide studs, and push it against the cylinder block.
4. Install the two oil cooler brace capscrews. Do **not** tighten at this time.

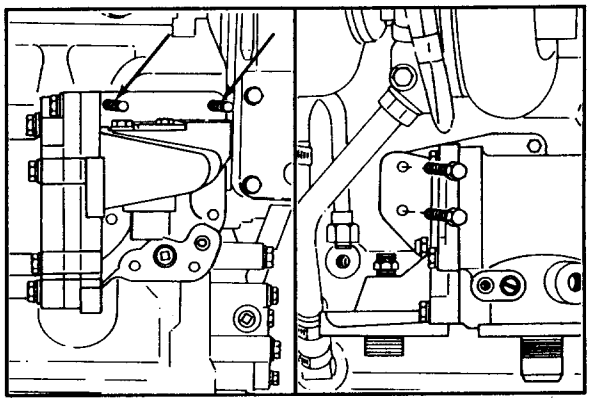

5. Install four of the support mounting capscrews, and remove the two guide studs.
6. Install the two remaining capscrews, and tighten all support capscrews to 45 N•m [35 ft-lbs] torque.

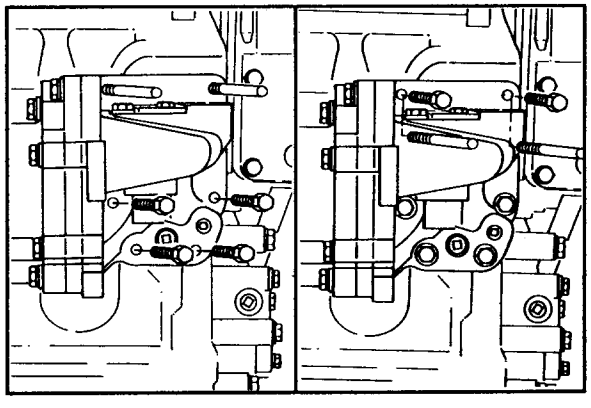

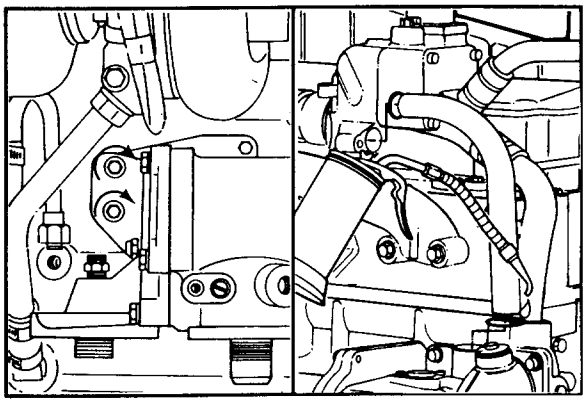

7. Tighten the two cooler brace mounting capscrews to 10 N•m [8 ft-lbs] torque.
8. On Big Cam III engines, install new O-rings on the water transfer tube. Lubricate the O-rings with 15W-40 oil.
9. Install the wire on the oil filter plugging alarm (if equipped).

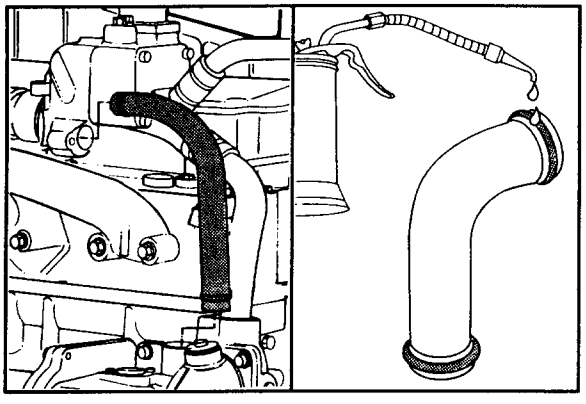

10. Install the water transfer tube in the oil cooler support and the thermostat housing. Tighten the retaining capscrew to 25 N•m [20 ft-lbs] torque.
11. On Big Cam IV engines, install new O-rings on the water transfer tube. Lubricate the O-rings with 15W-40 oil.

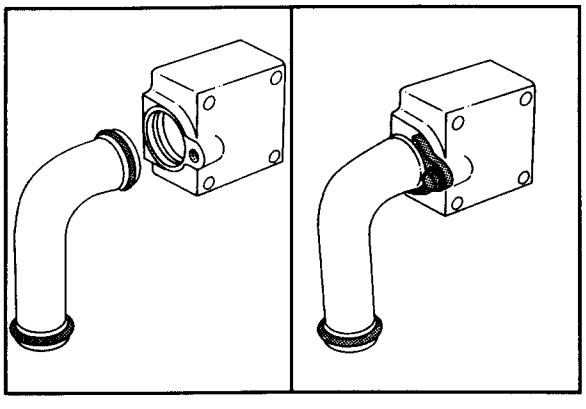

12. Install one end of the water transfer tube in the transfer cover.
13. Install the retaining clip, and tighten to 25 N•m [20 ft-lbs] torque.

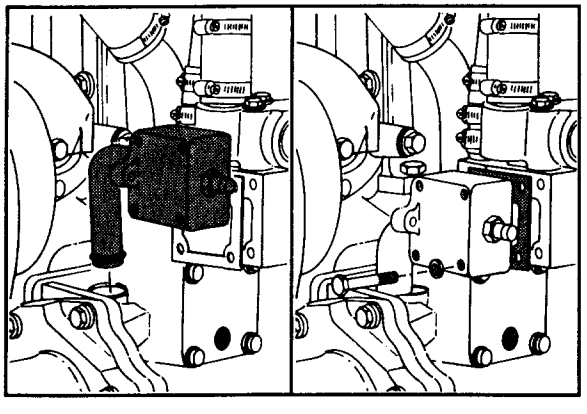

14. Install the other end of the water transfer tube in the oil cooler.
15. Install a new gasket, and mount the water transfer housing to the thermostat housing. Tighten to 25 N•m [20 ft-lbs] torque.

16. Install the turbocharger oil supply tube and the bypass filter return tube.
17. Install the full flow and the bypass filters. Refer to Procedure 2-11.

NOTE: Fill the filters with clean 15W-40 oil before installing them.

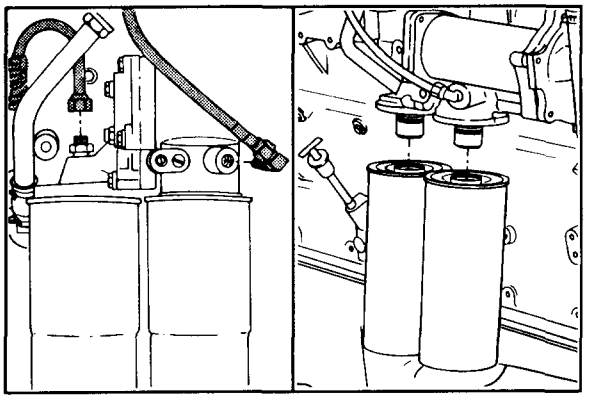

18. Fill the cooling system. Refer to Procedure 1-07.
19. Operate the engine until the water temperature reaches 80°C [180°F], and check for oil and coolant leaks.

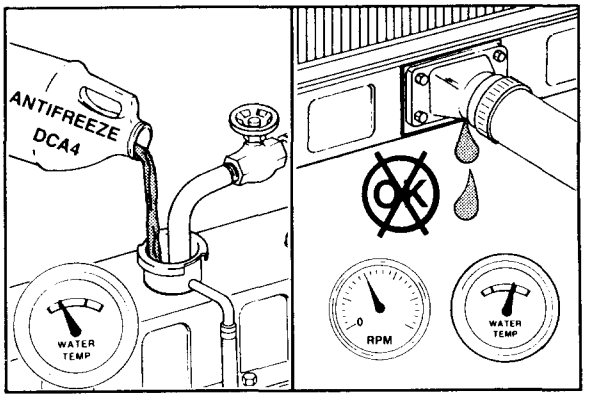

Oil Cooler Core - Replace (2-20)

Caution: Do not reuse an oil cooler core after an engine failure since there is no practical method to clean the cooler core. Metal particles which may have circulated through the lubricating system may remain in the cooler core and can cause engine damage. Do not allow dirt or gasket material to enter the oil passages when cleaning the oil cooler and the cylinder block surface.

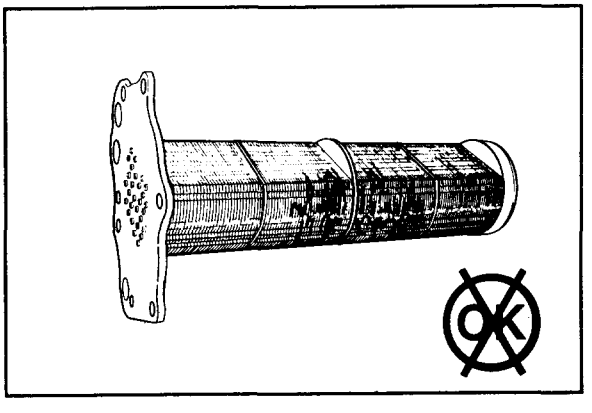

Remove

1. Remove the oil cooler assembly. Refer to Procedure 2-19.
2. Remove the six capscrews which hold the bypass filter head to the cooler housing. Remove the bypass filter head.

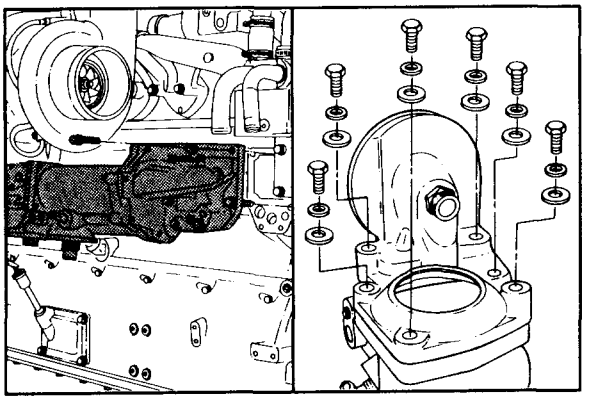

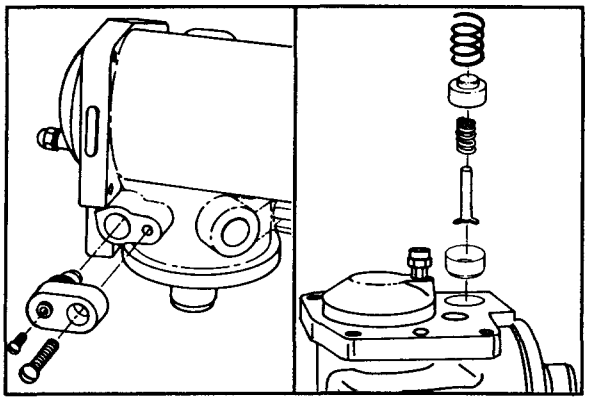

3. Remove the sending unit from the housing.
4. Remove the oil cooler bypass and pressure sensing valves.

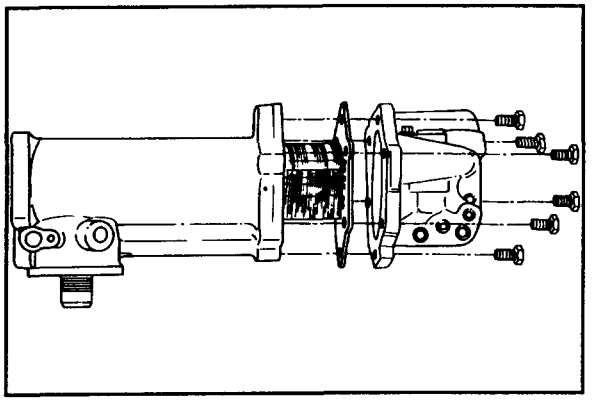

5. Remove the six capscrews which hold the oil cooler housing to the support.
6. Remove the oil cooler support and the cooler core from the housing.

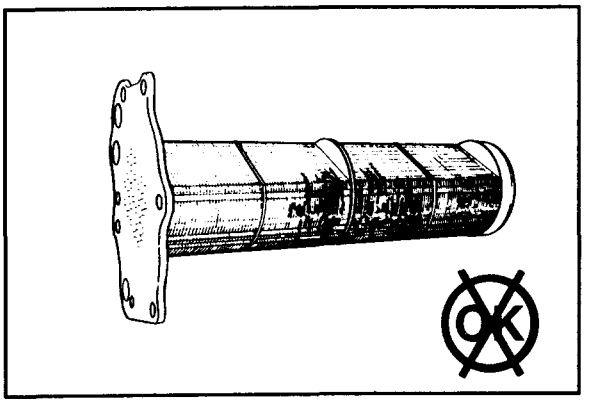

Clean and Inspect

Caution: Do not attempt to repair a damaged oil cooler core; it must be replaced.

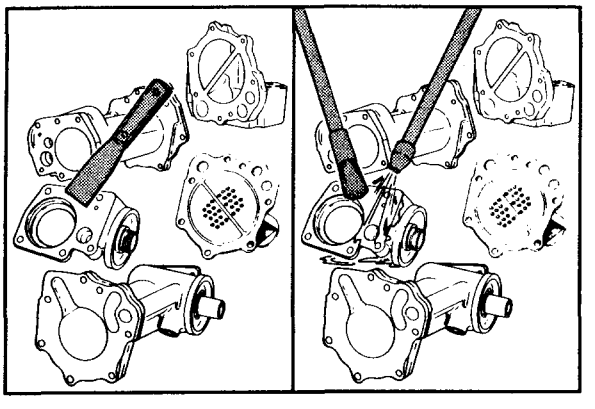

1. Clean the gasket material from the support, the housing, the cooler core, and the bypass filter head.
2. Clean all the parts with solvent, and dry with compressed air.

3. Visually inspect the support, the housing, and the bypass filter head for cracks or damage.
4. Visually inspect the cooler core for plugged or damaged tubes. Inspect the sealing surfaces for scratches, dents, or other damage.

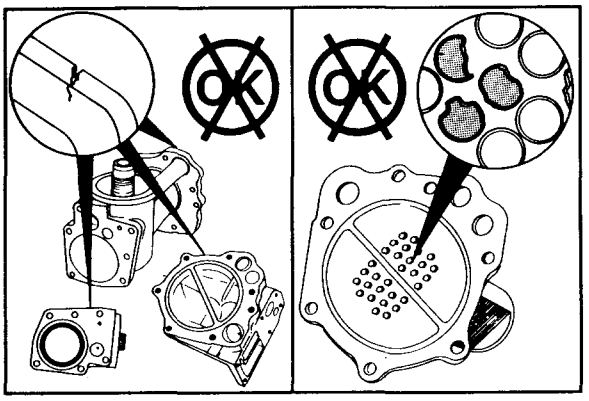

5. Refer to Procedure 2-21 for the oil cooler core pressure test.

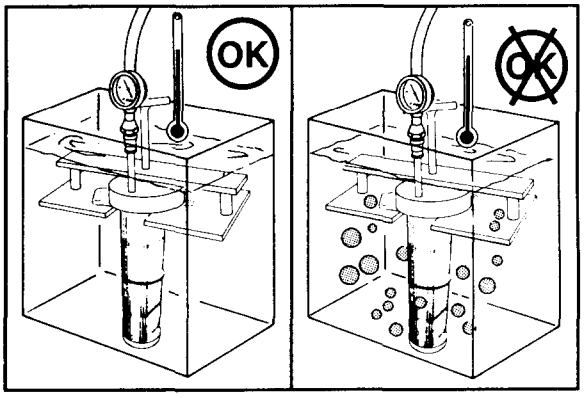

Install

1. Put the oil cooler core in an upright position with the large portion of the flange down.
2. Install a new gasket over the core. Align the holes in the gasket with the holes in the core.

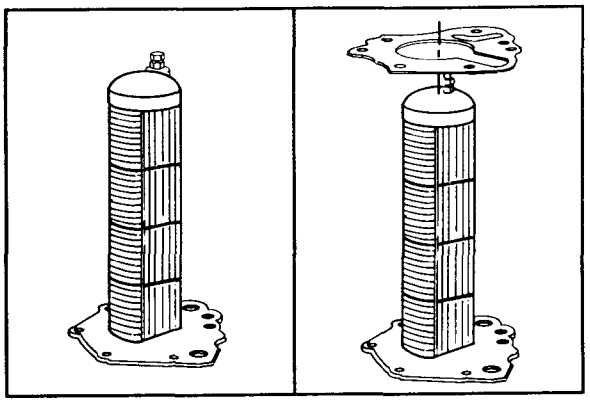

3. Assemble the housing over the core. Align the holes in the housing with the holes in the core.
4. Lubricate the bypass piston, and install it in the housing with the open end on top.

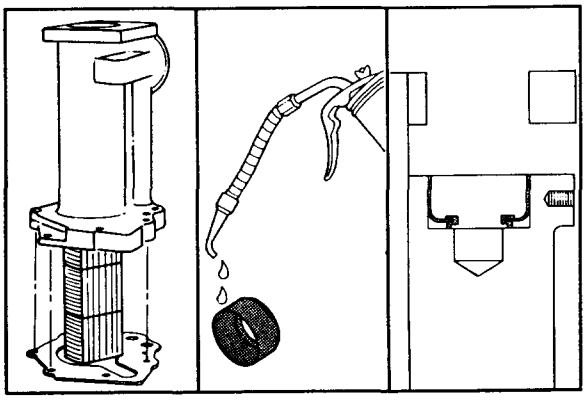

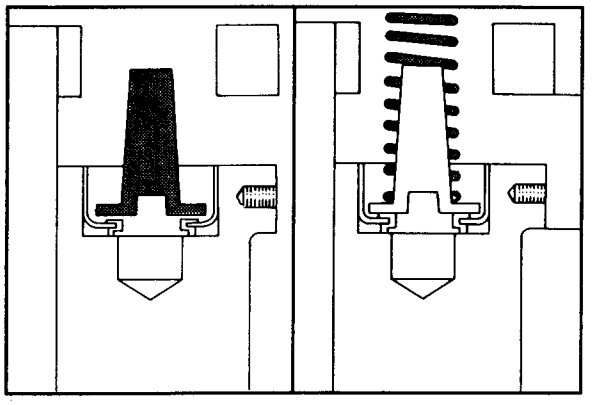

5. Install the bypass valve plunger in the piston.
6. Install the spring over the plunger into the piston.

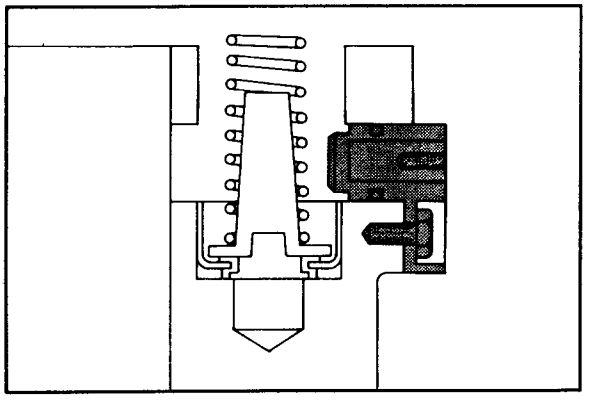

Caution: The sending unit must be installed before the pressure sensing piston to prevent damage to the piston.

7. Install the sending unit in the housing. Tighten the capscrew to 15 N•m [120 in-lbs] torque.

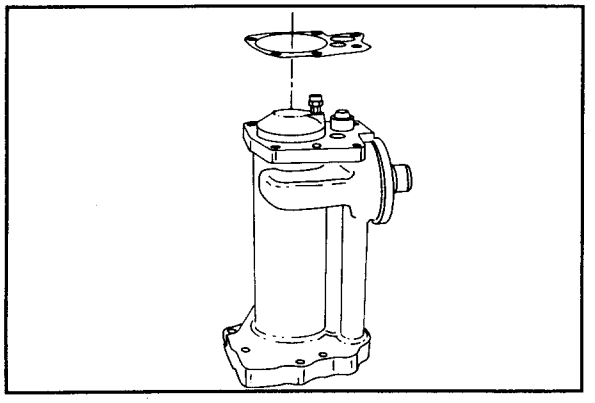

8. Install the bypass filter head gasket over the element.

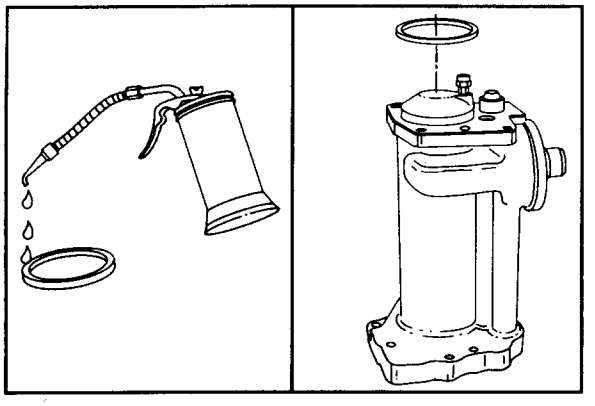

9. Lubricate the rectangular sealing ring with vegetable oil.

NOTE: Do **not** use lubricating oil on the rectangular sealing ring.

10. Install the sealing ring over the cooler core and against the gasket.

11. Lubricate the pressure sensing piston, and install it over the spring and the plunger. Move the piston up and down to make sure it moves freely in the bore.

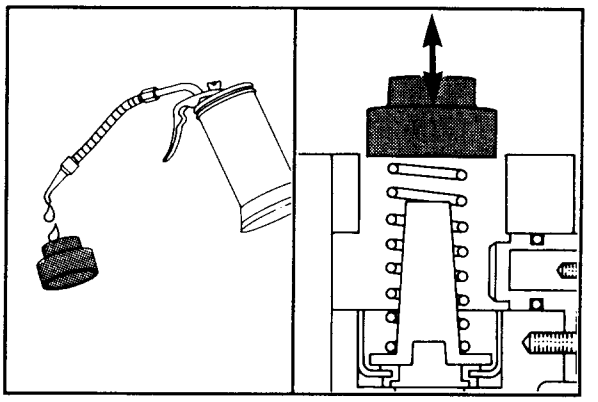

12. Install the compression spring on top of the piston.
13. Install the bypass filter head over the end of the cooler element.

NOTE: Make sure the compression spring is located in the filter head bore.

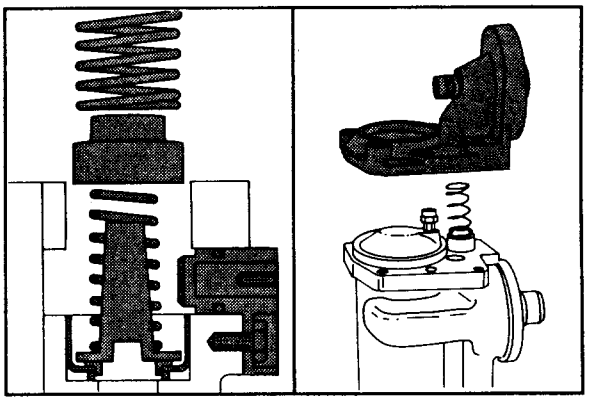

14. Move the filter head assembly up and down to make sure the pressure sensing piston moves freely in the housing bore.
15. Use your hand to press the filter head down over the end of the oil cooler element until it contacts the gasket.

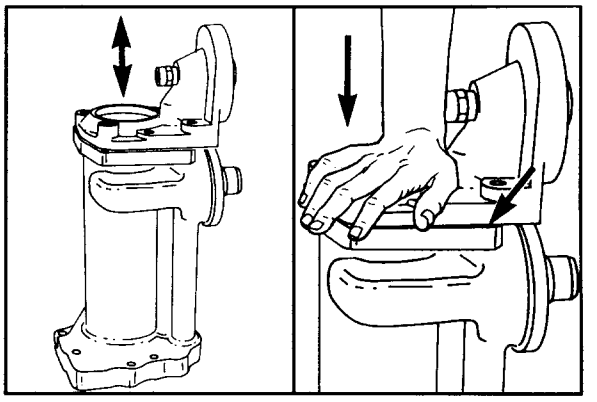

16. Hold the filter head in this position, and install the capscrews. Tighten the six capscrews to 45 N•m [35 ft-lbs] torque.

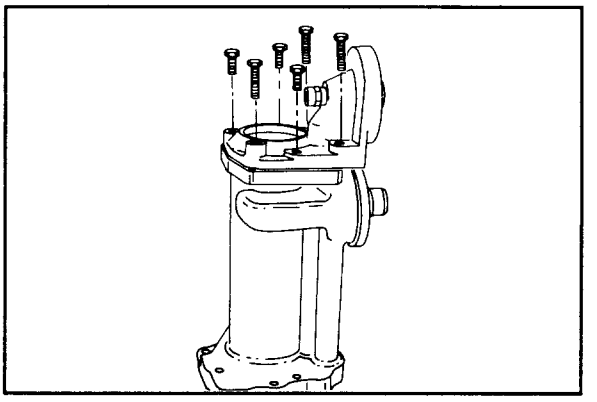

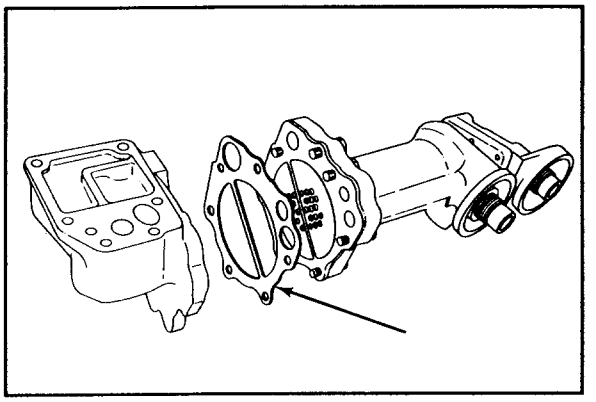

17. Install the capscrews through the cooler housing, and install the gasket over the capscrews.
18. Tighten the six capscrews to 45 N•m [35 ft-lbs] torque.

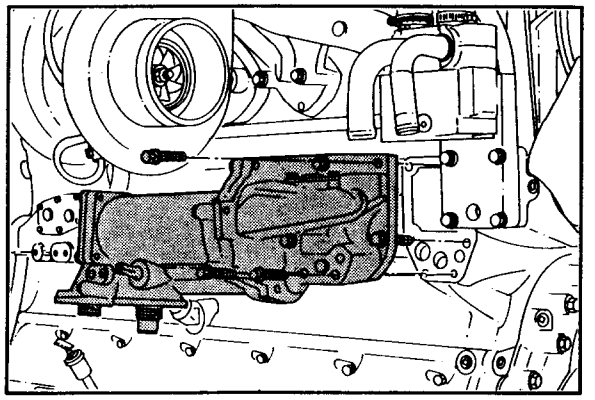

19. Install the oil cooler assembly. Refer to Procedure 2-19.

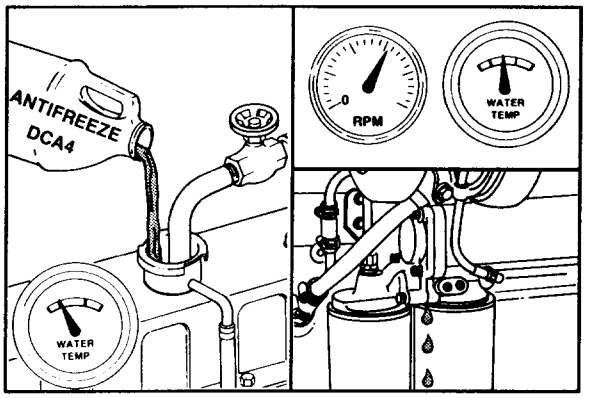

20. Fill the cooling system. Refer to Procedure 1-07.
21. Operate the engine until the water temperature reaches 80°C [180°F], and check for coolant or oil leaks.

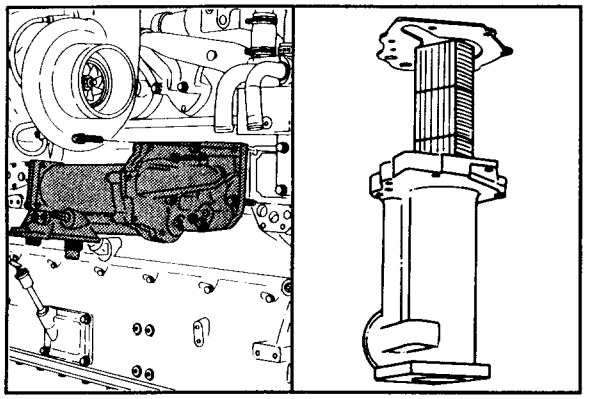

Oil Cooler Core - Pressure Test (2-21)

1. Remove the oil cooler assembly. Refer to Procedure 2-19.
2. Remove the oil cooler core. Refer to Procedure 2-20.

3. Install the oil cooler core in Part No. 3376765 Lubricating Oil Cooler Pressure Test Kit.
4. Attach a regulated air pressure line to Part No. 3376768 Test Plate, and apply 415 kPa [60 psi] air pressure.

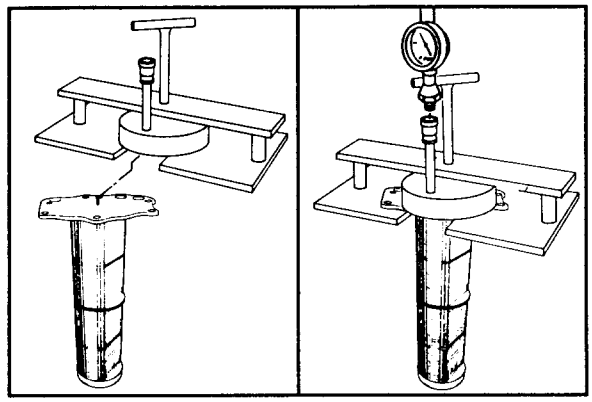

5. Install the oil cooler in a tank of water heated to 80°C [180°F], and inspect for leaks.

NOTE: If leaks are found, replace the oil cooler core.

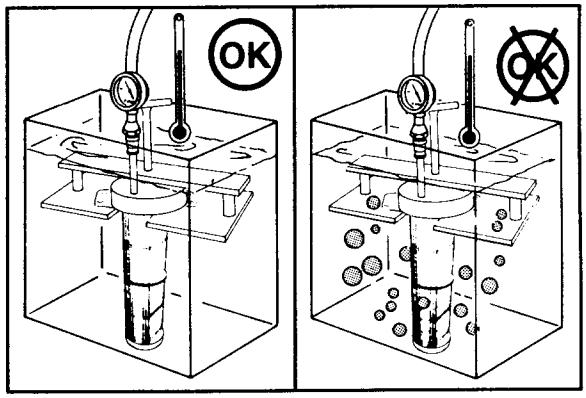

6. Remove the oil cooler core from the water tank.
7. Remove the pressure test equipment.
8. Dry the oil cooler with compressed air.

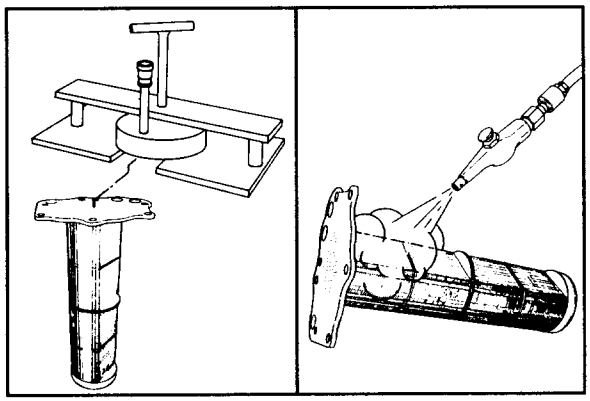

9. Install the oil cooler core. Refer to Procedure 2-20.
10. Install the oil cooler assembly. Refer to Procedure 2-19.

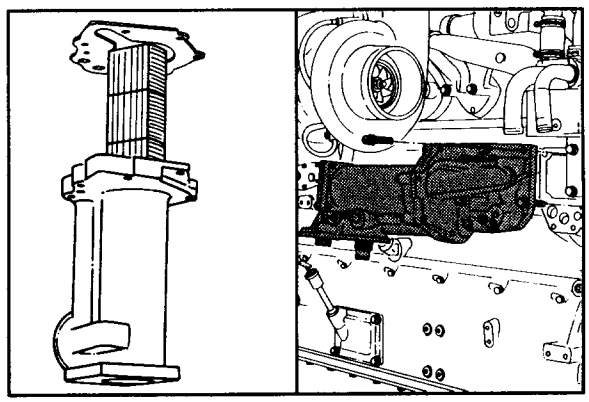

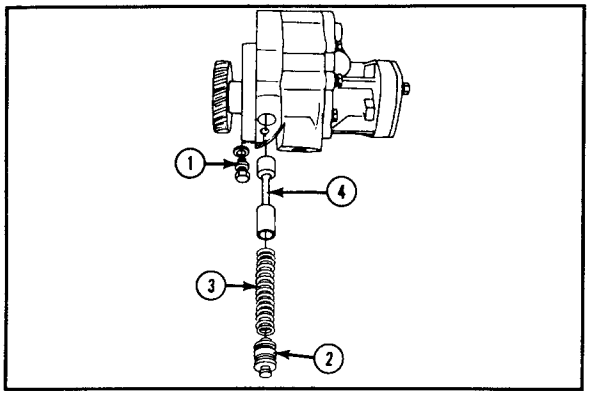

Main Oil Pressure Regulator - Replace (2-22)

Remove

Warning: Carefully remove the capscrew (1). The pressure regulator spring (3) is under compression.

1. Remove the capscrew (1), the retainer plug (2), the spring (3), and the regulator plunger (4) from the lubricating oil pump body.

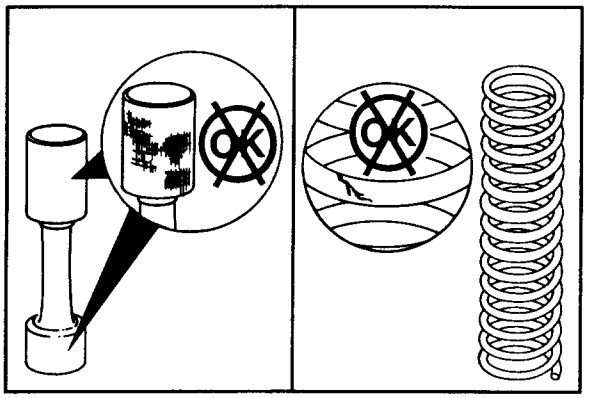

Inspect

1. Visually inspect the regulator plunger for scratches or scoring. If scratches are deep enough to be felt with a fingernail, the plunger **must** be replaced.
2. Visually inspect the spring for damaged or broken coils.

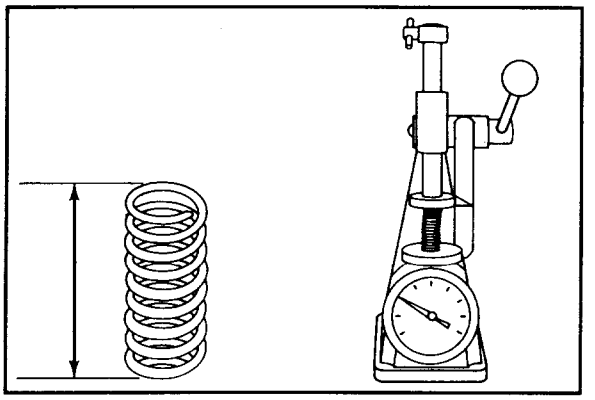

3. Use Part No. 3375182 Valve Spring Tester to determine if the spring is defective.
4. Compress the spring to a height of 46.23 mm [1.820 inches]. The force required to compress the spring to the specified height **must** be:
   - Minimum 98 Newtons [22 lbs].
   - Maximum 116 Newtons [26 lbs].

NOTE: If the spring **must** be replaced, replace it with the same spring part number as the one that was removed.

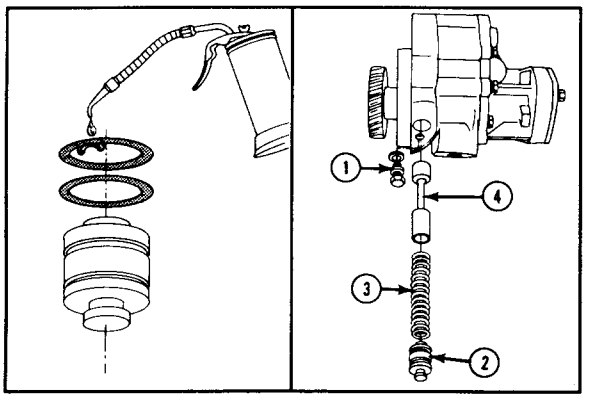

Install

1. Install new O-rings on the plunger retainer plug. Lubricate the O-rings with vegetable oil.
2. Install the plunger (4), the spring (3), the retainer plug (2) and the capscrew (1).
3. Tighten the retainer plug capscrew to 25 N•m [20 ft-lbs] torque.

4. Operate the engine until the water temperature reaches 80°C [180°F]. Check the oil pressure, and check for oil leaks.

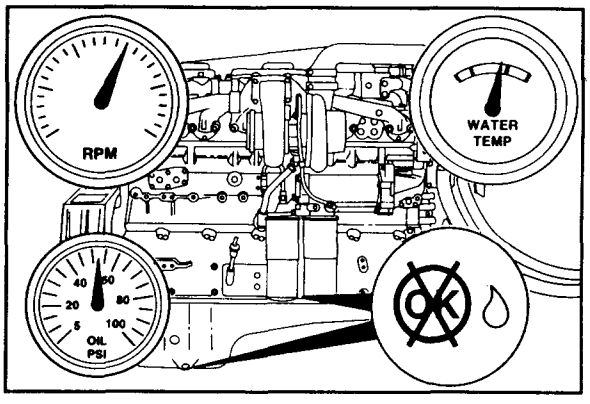

Lubricating Oil Pump Signal Line Orifice - Clean "In Chassis" (2-23)

Remove

Warning: Carefully remove the capscrew (1). The pressure regulator spring is under compression.

1. Remove the main oil pressure regulator plunger. Refer to Procedure 2-22.

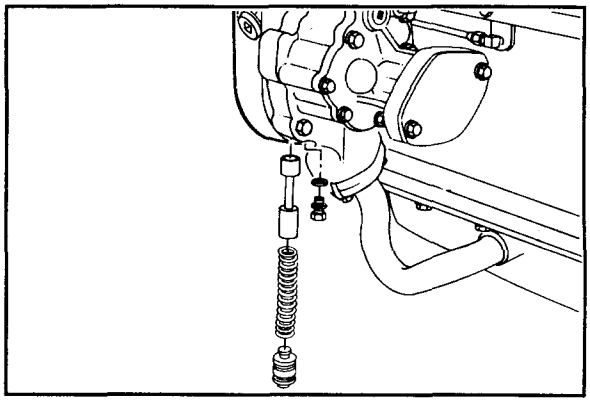

2. Remove the oil pressure signal line.
3. Remove the 1/8-inch NPTE adapter from the lubricating oil pump cover.

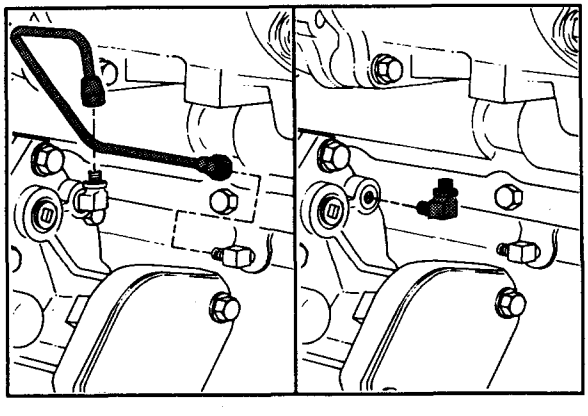

Clean

1. Use an acetylene torch tip cleaner or equivalent that is 1.0 mm [0.040-inch] or less in diameter to clean the orifice.

NOTE: The diameter of the orifice is 1.0 mm [0.040-inch]. Do **not** attempt to drill out the orifice or use a larger diameter wire to clean the orifice.

2. Use solvent and an air solvent gun to wash the debris from the orifice and the pressure regulator bore in the lubricating oil pump.

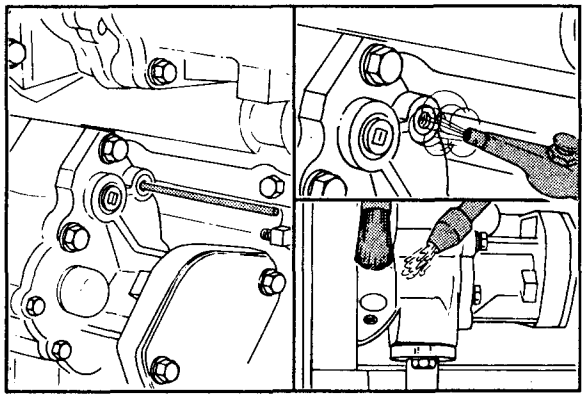

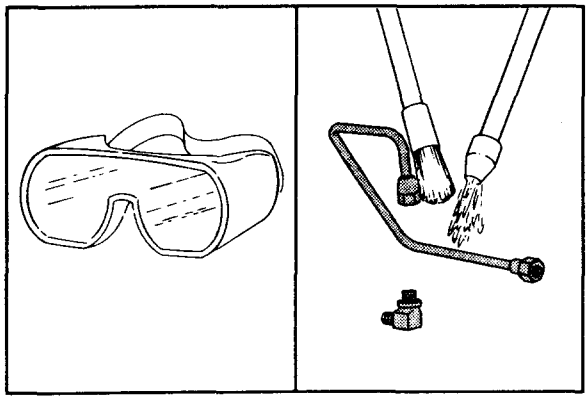

Caution: Wear safety goggles when using an air solvent gun to prevent possible eye injury.

3. Clean the inside of the signal line and the 1/8-inch NPTE adapter with solvent and an air solvent gun.

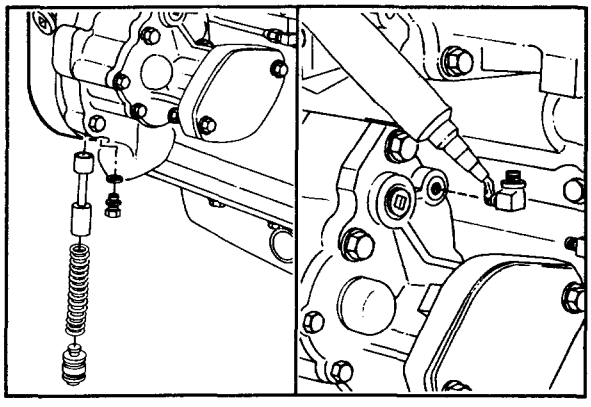

Install

1. Install the main oil pressure regulator. Refer to Procedure 2-22.
2. Apply pipe sealant to the threads of the 1/8-inch NPTE adapter, and install it in the lubricating oil pump front cover.

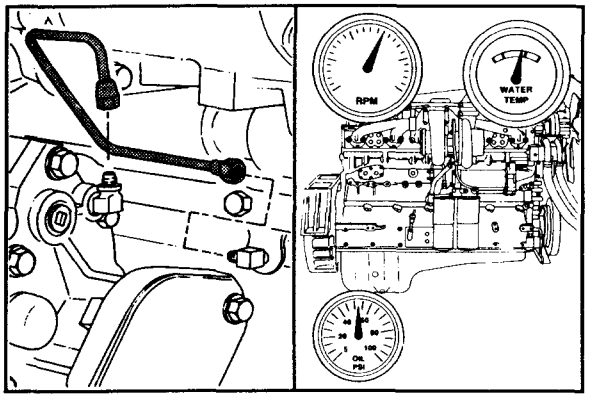

3. Install the oil pressure signal line.
4. Operate the engine until the water temperature reaches 80°C [180°F], and check the oil pressure.

NOTE: If the oil pressure problem still exists or occurs again soon after the above procedure has been completed, remove the lubricating oil pump for disassembly and a thorough cleaning.

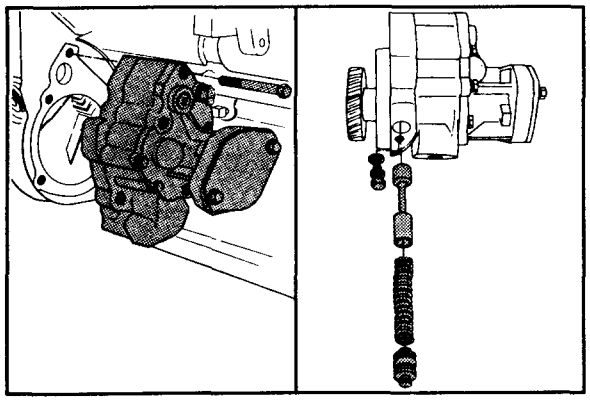

Lubricating Oil Pump Signal Line Orifice - Clean "Pump Removed" (2-24)

Remove

1. Remove the lubricating oil pump. Refer to Procedure 2-25.
2. Remove the main oil pressure regulator. Refer to Procedure 2-22.

3. Remove the lubricating oil pump front cover and the lubricating oil pump driven gear.
4. Remove the 1/8-inch NPTE adapter from the lubricating oil pump cover.

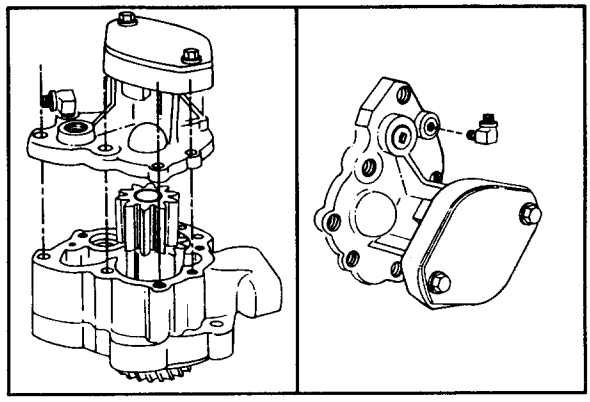

Clean

1. Clean the gasket material from the lubricating oil pump body and cover.
2. Use an acetylene torch tip cleaner or equivalent that is 1.0 mm [0.040-inch] or less in diameter to clean the orifice.

NOTE: The diameter of the orifice is 1.0 mm [0.040-inch]. Do **not** attempt to drill out the orifice or use a larger diameter wire to clean the orifice.

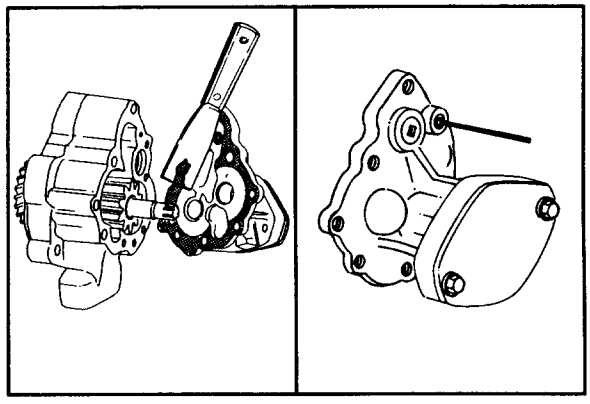

3. Use solvent and an air solvent gun to clean the signal line, the 1/8-inch NPTE adapter, the lubricating oil pump cover, and the body. Hold the driven gear off of the lubricating oil pump body when cleaning the gear bore area.

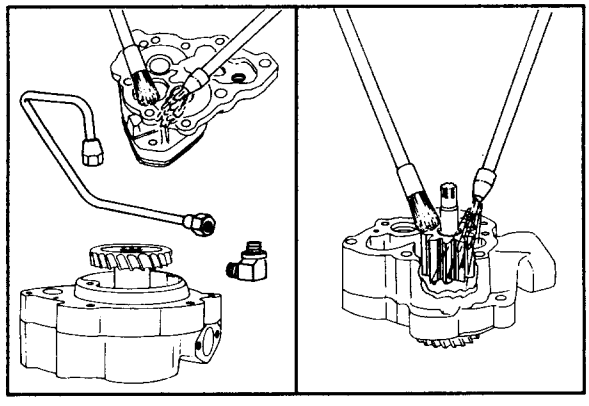

Install

1. Use 15W-40 oil to lubricate the shaft, the gears, and the bushings. Also, lubricate the area between the driven gear and the body.

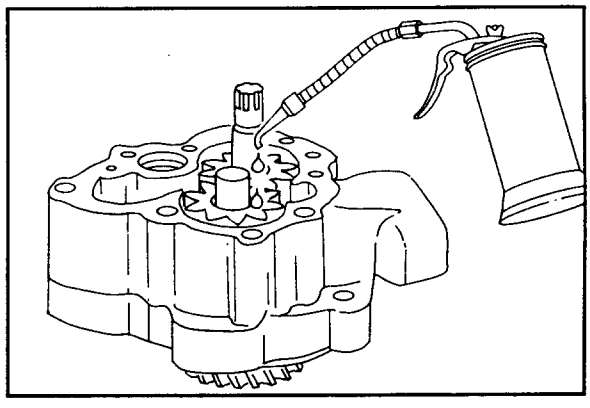

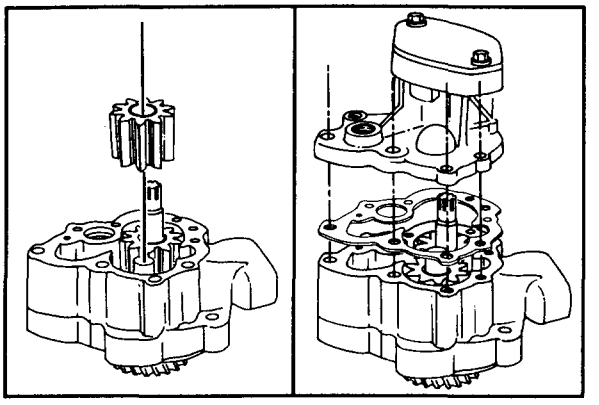

2. Install the driven gear on the shaft.
3. Install a new gasket on the pump body, and install the cover.

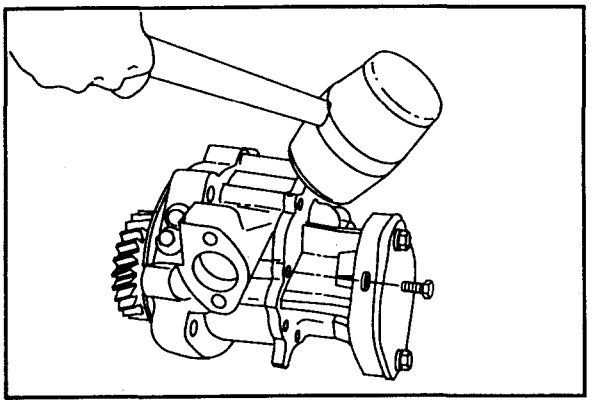

4. Tap the cover lightly with a rubber hammer to push the cover over the dowels.
5. Install the capscrews, and tighten to 25 N•m [20 ft-lbs] torque.

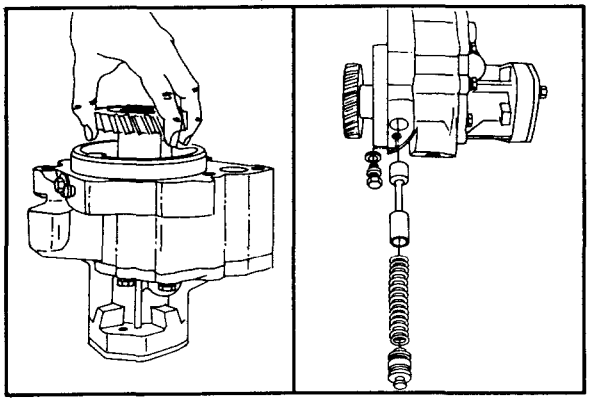

6. Rotate the gears to make sure they rotate freely in the pump.
7. Install the main oil pressure regulator. Refer to Procedure 2-22.

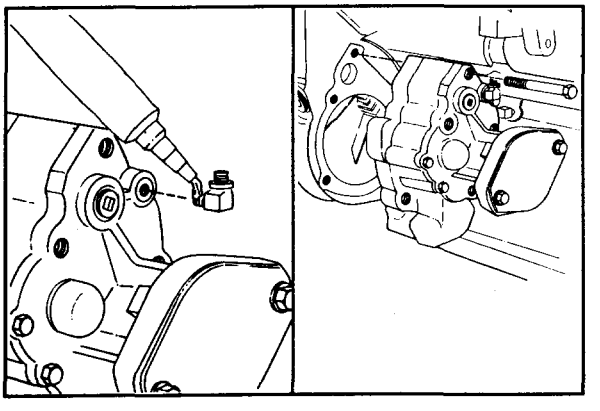

8. Apply a small amount of pipe sealant to the 1/8-inch NPTE adapter, and install it in the cover.
9. Install the lubricating oil pump. Refer to Procedure 2-25.

10. Operate the engine until the water temperature reaches 80°C [180°F]. Check the oil pressure, and check for oil leaks.

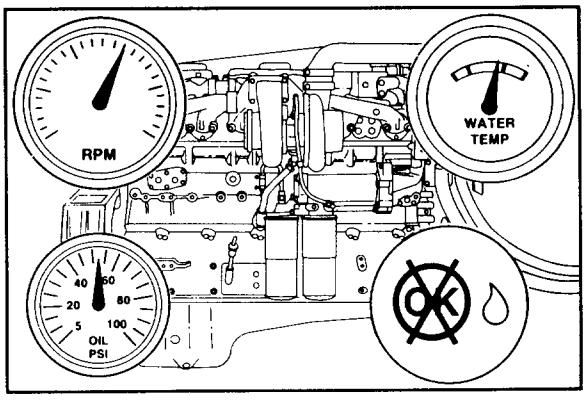

Lubricating Oil Pump - Replace (2-25)

Remove

1. Remove the demand flow and cooling (DFC) signal line.
2. Remove the capscrews and the lubricating oil transfer tube.

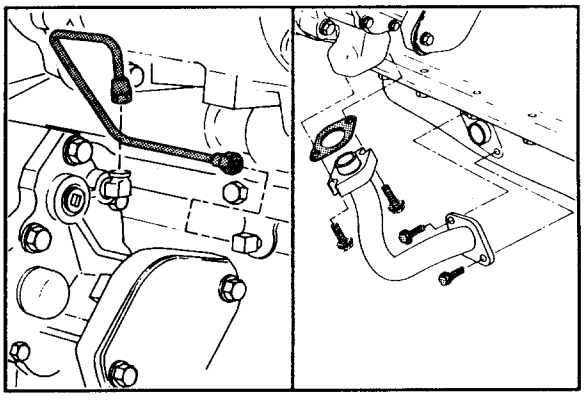

3. Remove the five capscrews which hold the lubricating oil pump to the cylinder block.

Caution: Do not pry on the lubricating oil pump mounting flange.

4. Remove the lubricating oil pump from the gear case. Discard the gasket.

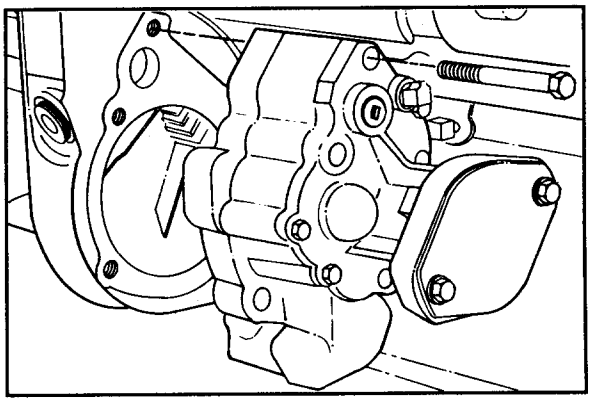

Clean and Inspect

Caution: Do not allow dirt or gasket material to enter the oil passages. Bearing damage can result.

1. Clean the lubricating oil pump and the cylinder block gasket surfaces.

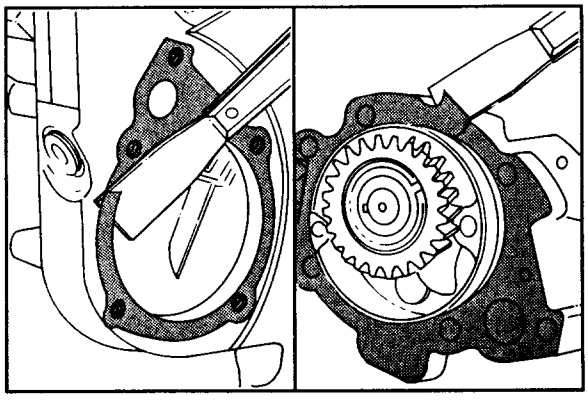

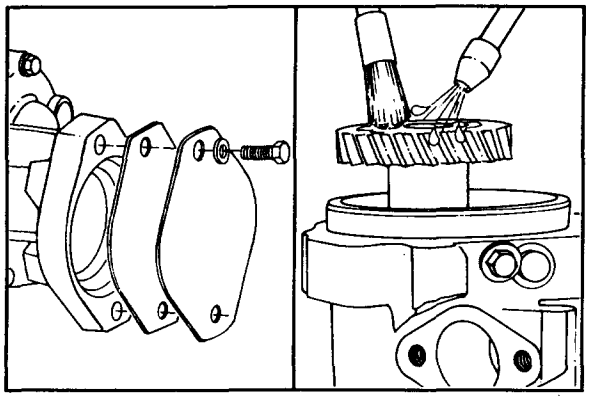

2. Use solvent to clean the lubricating oil pump, and dry with compressed air.

NOTE: For cleaning purposes, the cover and the gasket for the power steering pump mounting flange **must** be removed.

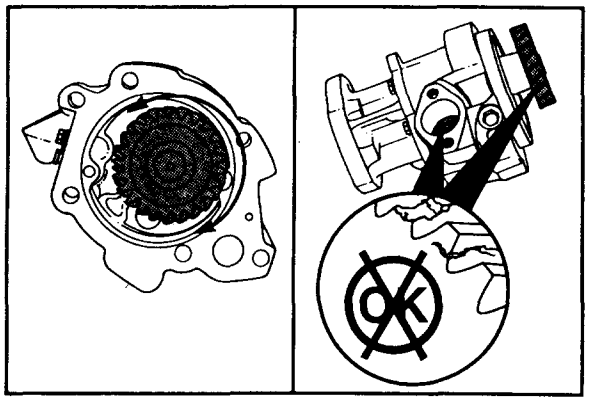

3. Inspect the gears for freedom of rotation.
4. Inspect the gears for cracked or broken teeth.

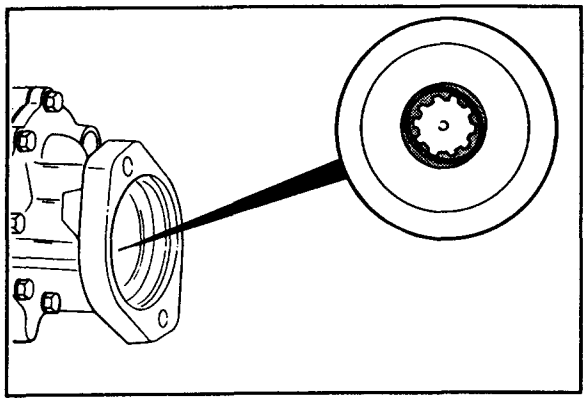

5. Inspect the bushings for excessive wear or discoloration due to overheating or seizure to the shafts.

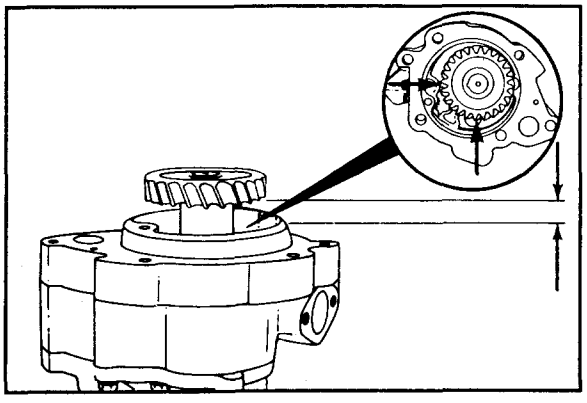

6. Use depth verniers to measure the drive shaft end clearance in two locations 90 degrees apart.

Drive Shaft End Clearance		
mm		in
0.05	MIN	0.002
0.13	MAX	0.005

Install

1. Install the power steering pump mounting flange gasket and cover. Tighten the capscrews to 25 N•m [20 ft-lbs] torque.
2. Install a new gasket on the mounting trunion of the lubricating oil pump.

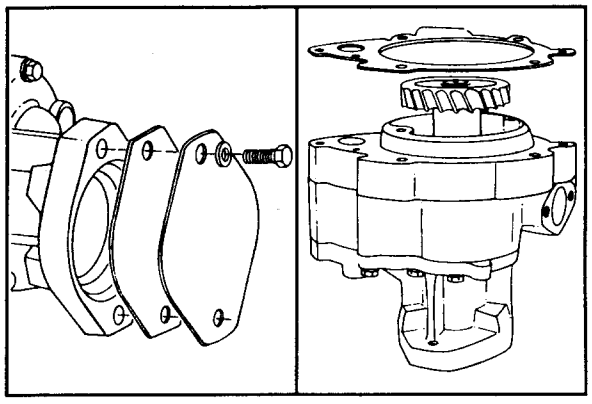

3. Install the lubricating oil pump in the mounting hole in the cylinder block gear flange.
4. Install the five mounting capscrews. Tighten the capscrews to 55 N•m [40 ft-lbs] torque.

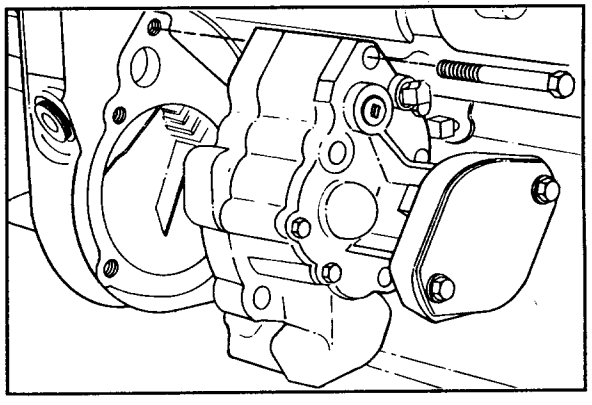

5. Install the DFC signal line. Tighten the signal line tube nuts to 15 N•m [120 in-lbs] torque.
6. Install the lubricating oil transfer tube. Refer to Procedure 2-15.

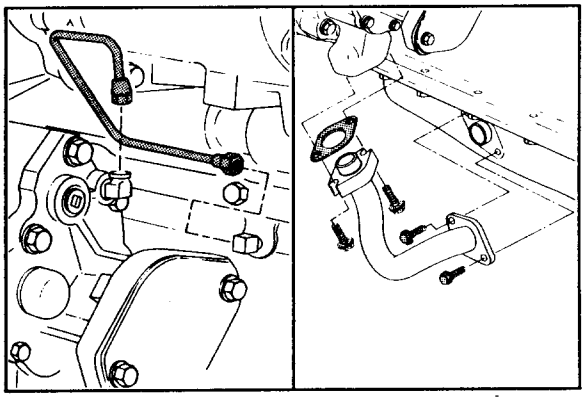

7. Operate the engine until the water temperature reaches 80°C [180°F]. Check the oil pressure, and check for oil leaks.

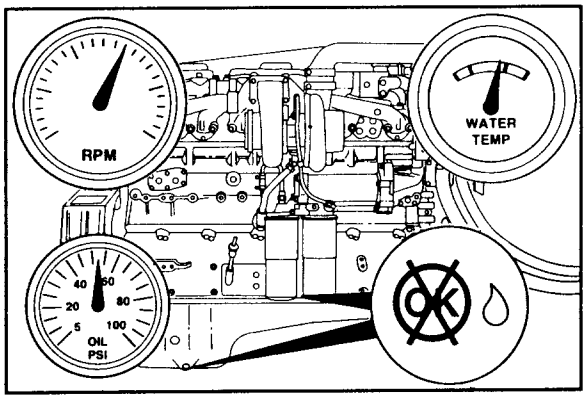

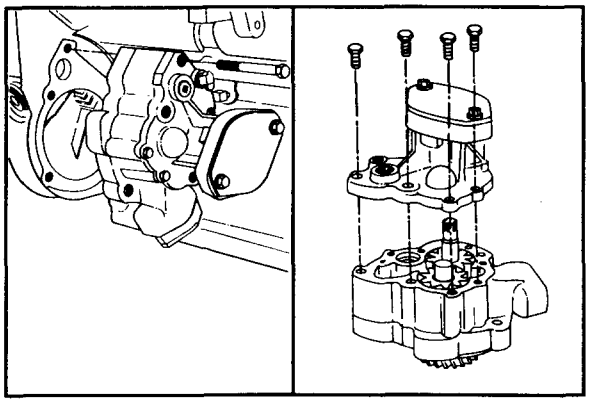

High Oil Pressure Relief Valve - Check (2-26)

Check Retainer Plug Depth

1. Remove the lubricating oil pump. Refer to Procedure 2-25.
2. Remove the lubricating oil pump cover.

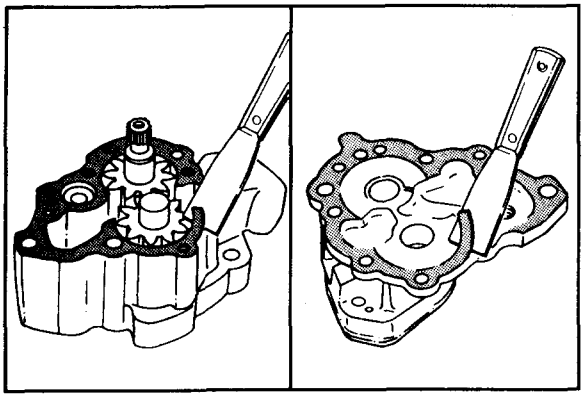

3. Remove all gasket material from the lubricating oil pump body and cover.

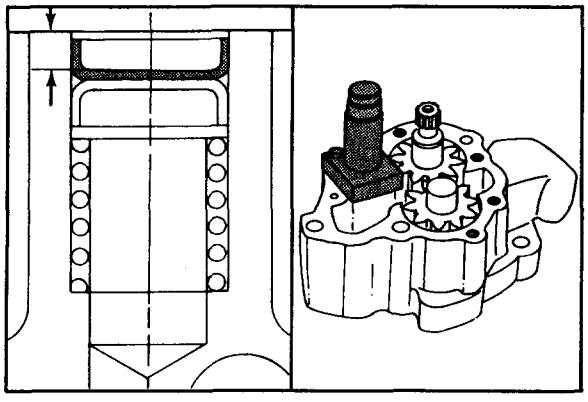

4. Measure the installed depth of the retainer plug.
5. If the plug depth is less than 6.48 mm [0.255-inch], use Part No. 3376011 DFC Pressure Valve Fixture to install it to the correct depth of 6.48 to 6.98 mm [0.255- to 0.275-inch].

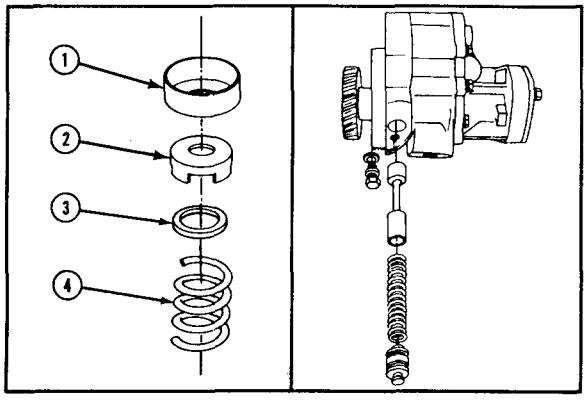

NOTE: If the plug depth is within specifications and the engine oil pressure is out of specifications, check the high oil pressure relief valve and the main oil pressure regulator. Refer to Procedures 2-27 and 2-22, respectively.

6. Install a new gasket and the lubricating oil pump cover. Tighten the capscrews to 25 N•m [20 ft-lbs] torque.

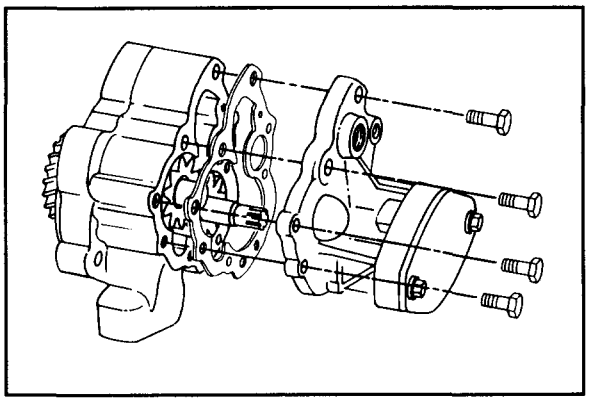

7. Install the lubricating oil pump. Refer to Procedure 2-25.
8. Operate the engine until the water temperature reaches 80°C [180°F], and check the oil pressure again.

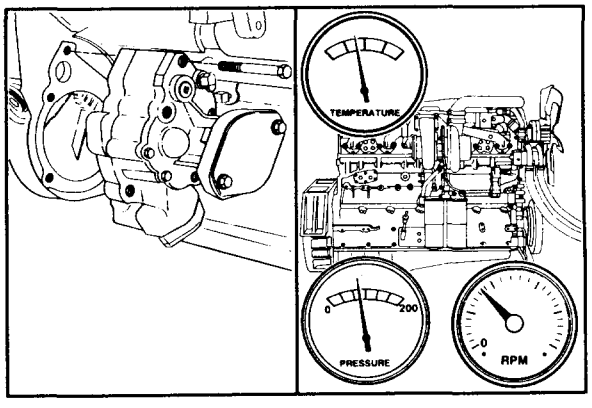

High Oil Pressure Relief Valve - Replace (2-27)

Remove

1. Remove the lubricating oil pump. Refer to Procedure 2-25.
2. Remove the lubricating oil pump cover.

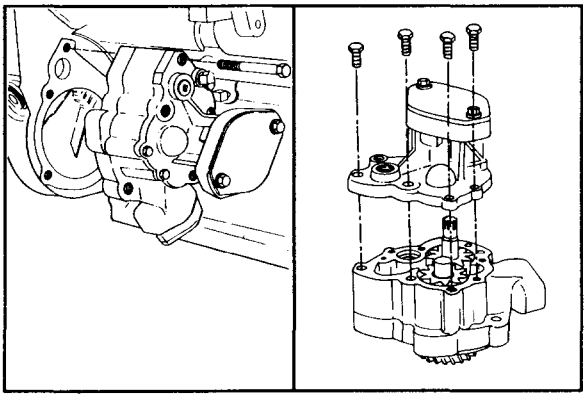

3. Remove all gasket material from the lubricating oil pump body and cover.

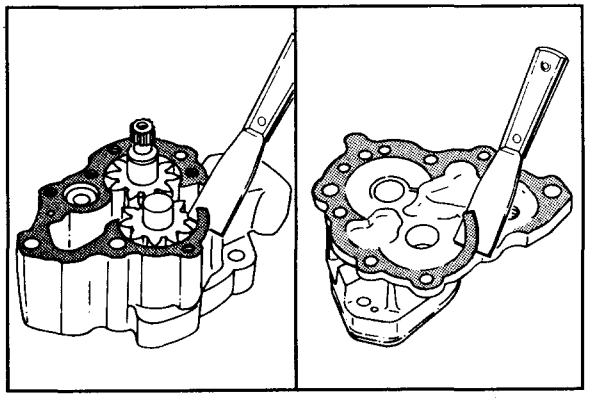

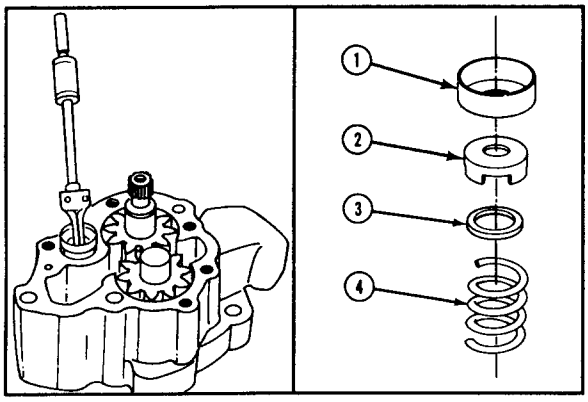

Warning: Carefully remove the retainer plug (1). The pressure relief valve spring (4) is under compression.

4. Use Part No. 3375784 Light Duty Puller Kit or equivalent to remove the retainer plug (1).
5. Remove the valve disc (2), the washer (3), and the pressure relief valve spring (4).

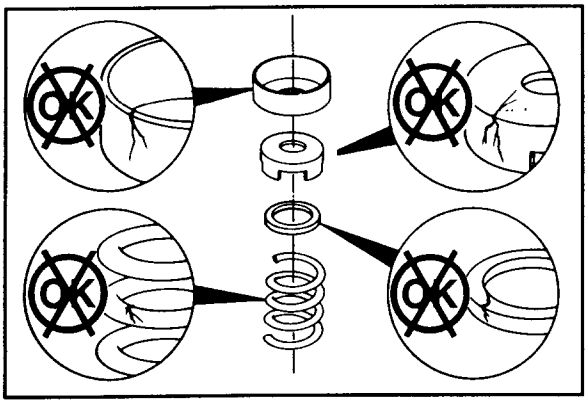

Inspect

1. Inspect the parts for damage.

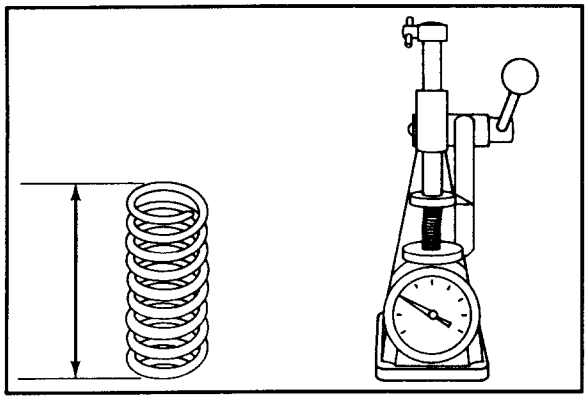

2. Use Part No. 3375182 Valve Spring Tester to measure the relief valve spring tension.
3. Compress the spring to a height of 29.0 mm [1.145 inches].

NOTE: The force required to compress the spring **must** be:

- Minimum 260 Newtons [59 lbs.]
- Maximum 320 Newtons [72 lbs.]

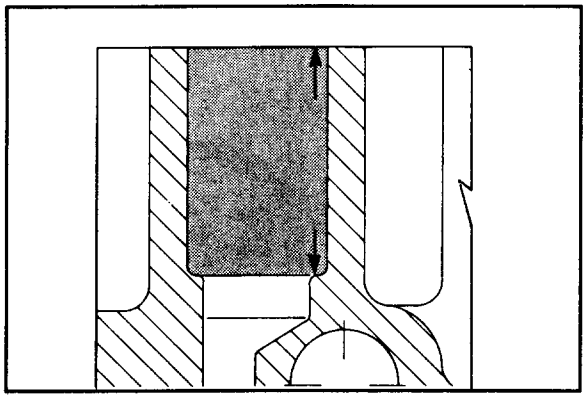

4. Measure the relief valve seat depth in the lubricating oil pump. The maximum depth is 46.73 mm [1.840 inches].

Install

1. Install Part No. 3376013 Locating Plate (in Part No. 3376011 DFC Pressure Valve Fixture) on the lubricating oil pump body. Use two 5/16-18 inch UNC x 1-1/4 inch capscrews. Do **not** tighten the capscrews at this time.

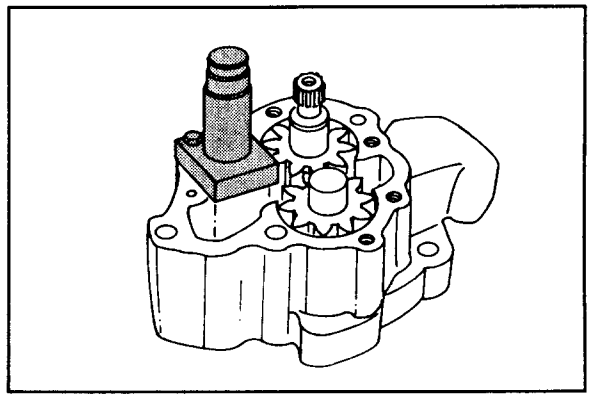

2. Install the large diameter of Part No. 3376012 Valve Mandrel (in Part No. 3376011 DFC Pressure Valve Fixture) through the locating plate into the pressure limit valve bore in the pump body.
3. Tighten the capscrews, and remove the mandrel.

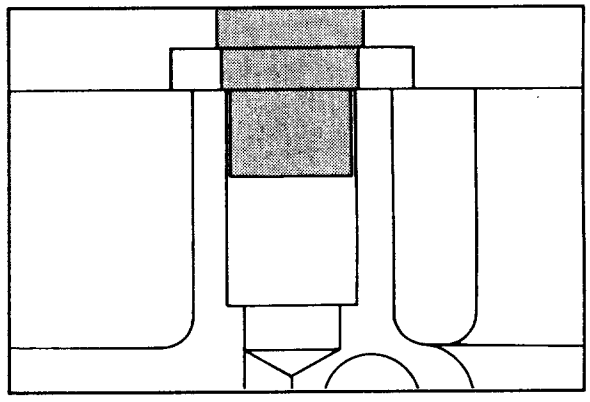

4. Install the spring (4), the washer (3), the valve disc (2), and the retainer plug (1) in the bore in the locating plate.
5. Make sure the prongs on the disc are down (toward the washer) and that the cup side of the retainer plug is up (toward the mandrel).

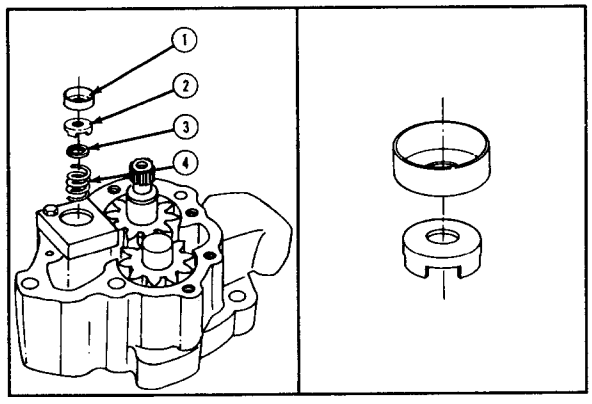

6. Install the small end of Part No. 3376012 Valve Mandrel in the bore in the locating plate.
7. Press the mandrel with an arbor press until the large diameter of the mandrel is against the locating plate.

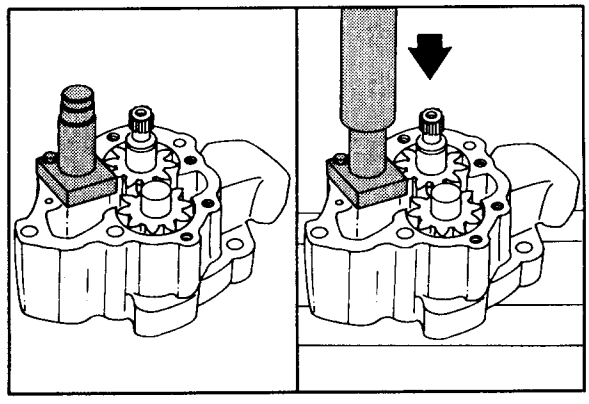

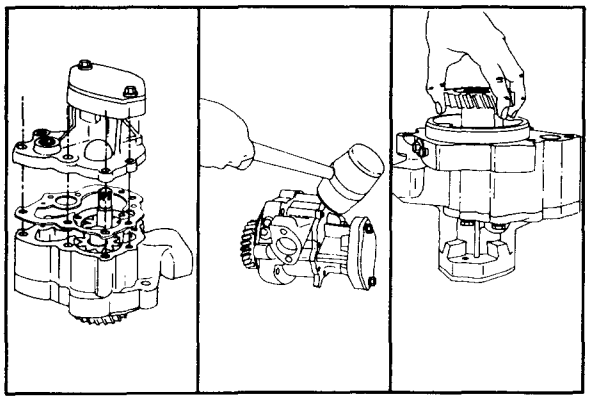

8. Install a new gasket and the cover to the pump body. Tap the cover lightly with a rubber hammer to push the cover over the dowels.
9. Install the capscrews and the washers, and tighten to 25 N•m [20 ft-lbs] torque.
10. Turn the gears to make sure they rotate freely.

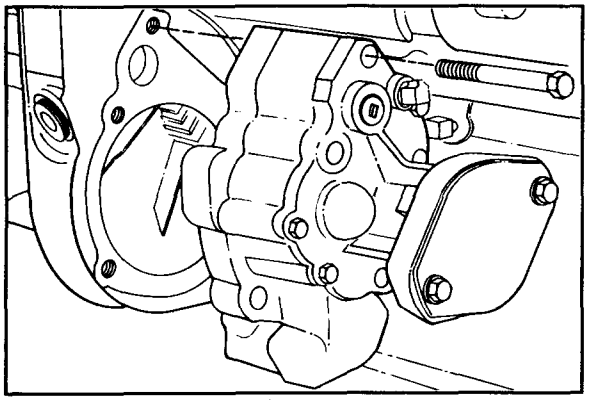

11. Install the lubricating oil pump. Refer to Procedure 2-25.

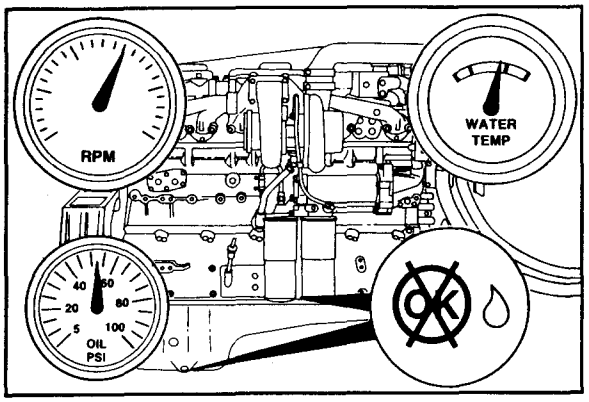

12. Operate the engine until the water temperature reaches 80°C [180°F]. Check the oil pressure, and check for oil leaks.

Section 3 - Combustion Air System

Section Contents

	Reference No.	Page No.
General Information	3-01	2
Specifications	3-02	3
Flow Diagrams	3-03	4
Service Tools	3-04	5

System Troubleshooting and Repair List

	Procedure No.	Page No.
Aftercooler - Pressure Test	3-17	35
Aftercooler - Replace	3-16	28
Air Leaks - Check	3-10	10
Compressor Seal Leakage - Check	3-06	7
Correct Turbocharger Installed - Check	3-07	8
Exhaust Restriction - Check	3-09	9
Exhaust Manifold - Replace	3-15	25
Intake Air Restriction - Check	3-08	8
Series Turbocharger - Replace	3-14	19
Turbocharger Axial and Radial Clearance - Check	3-12	13
Turbocharger Blade Damage - Check	3-11	12
Turbocharger - Replace	3-13	14
Turbocharger Turbine Seal Leaks - Check	3-05	5

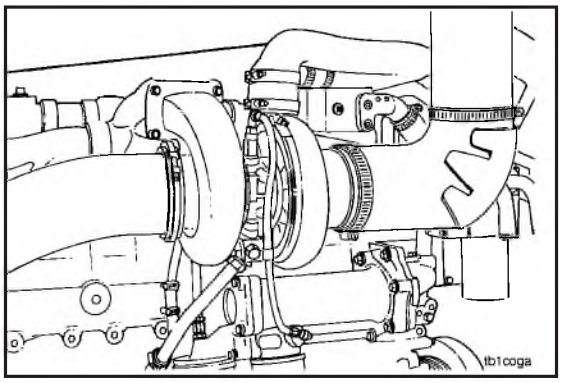

General Information - (3-01)

The combustion air system consists of intake air piping, turbocharger, and exhaust air piping.

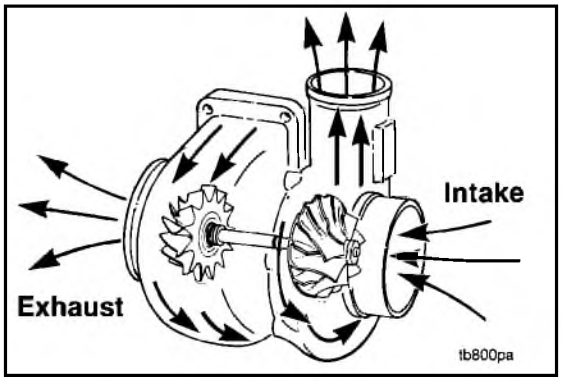

The turbocharger uses exhaust gas energy to turn the turbine wheel. This turbine wheel drives a compressor impeller which provides pressurized air to the engine for combustion.

Combustion Air System Specifications - (3-02)

Air Induction System

Maximum temperature rise between ambient air and engine inlet air

Ambient air temperature 0 to 38°C [32 to 100°F] ..... 15°C [30°F]

Maximum intake restriction (clean air filter element)

- Normal-duty type air cleaner ..... 25.0 cm H_2O [10.0 in. H_2O]
- Medium-duty dry type air cleaner ..... 30.5 cm H_2O [12.0 in. H_2O]
- Heavy-duty dry type air cleaner ..... 38.0 cm H_2O [15.0 in. H_2O]

Maximum intake restriction (dirty air filter element) ..... 63.5 cm H_2O [25.0 in. H_2O]

Exhaust System

Maximum back pressure from piping and silencer (combined) ..... 7.5 cm Hg [3.0 in. Hg]

Normal exhaust pipe diameter ..... 12.5 cm [5.0 in.]

Combustion Air System Flow Diagrams - (3-03)

Big Cam III Intake System

1. Intake Air Inlet to Turbocharger
2. Turbocharger Air Crossover
3. Aftercooler
4. Intake Manifold
5. Intake Valve Ports

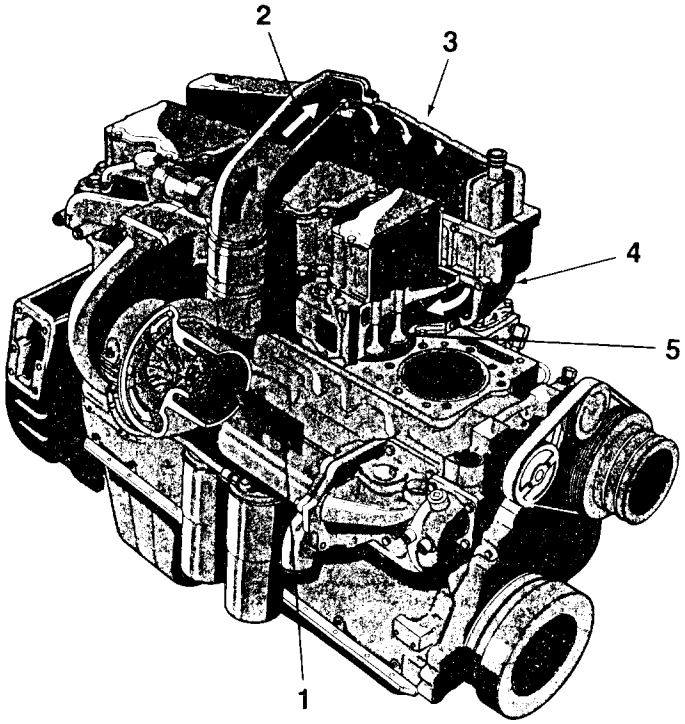

Big Cam IV Intake System

1. Intake Air Inlet to Turbocharger
2. Turbocharger Air Crossover
3. Aftercooler
4. Intake Manifold
5. Intake Valve Ports

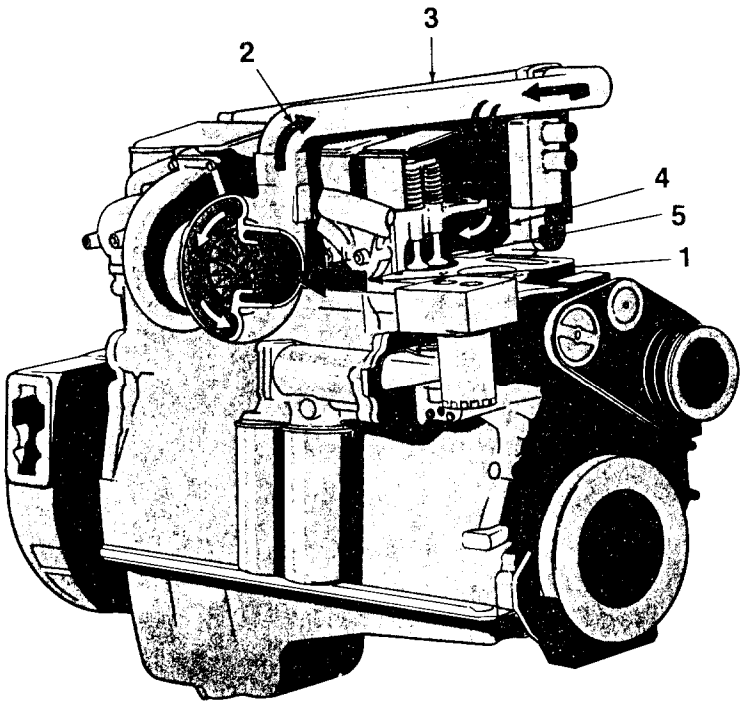

Service Tools - (3-04)

Part No. ST-537 Dial Depth Gauge

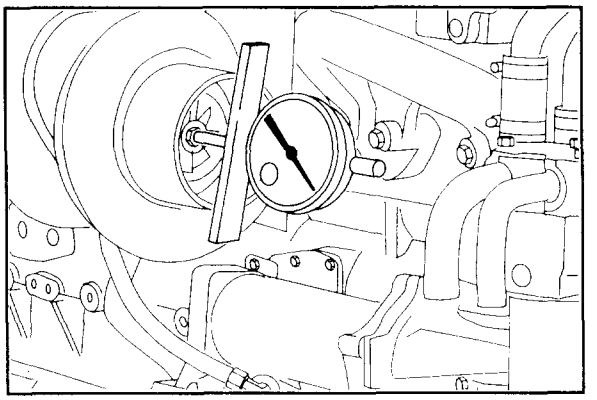

Part No. 3377253 Black Light (AC)

Part No. 3377394 Black Light (DC)

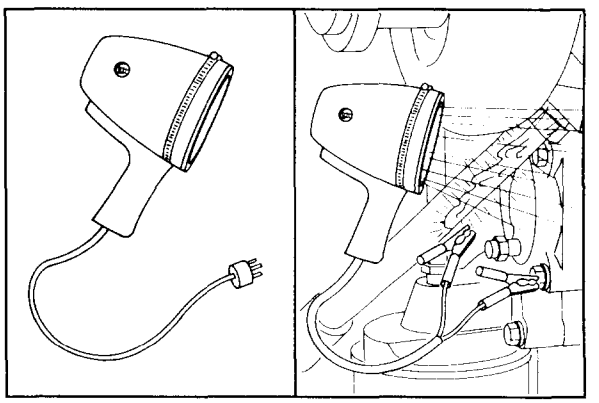

Part No. 3376891 Flourescent Tracer

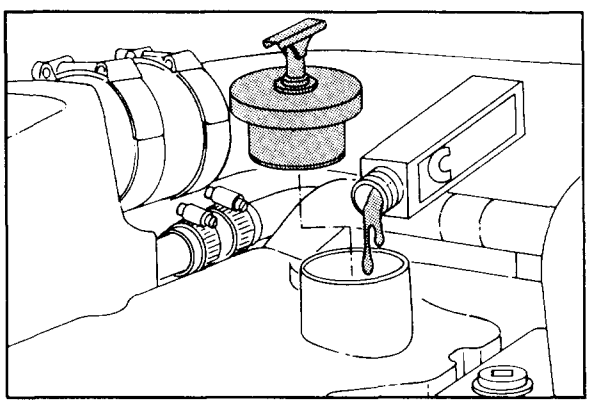

Turbocharger Turbine Seal Leaks - Check (3-05)

1. Add one unit of Part No. 3376891 Flourescent Tracer to each 38 litres [10.0 U.S. gallons] of engine lubricating oil.
2. Operate the engine at low idle for 10 minutes.

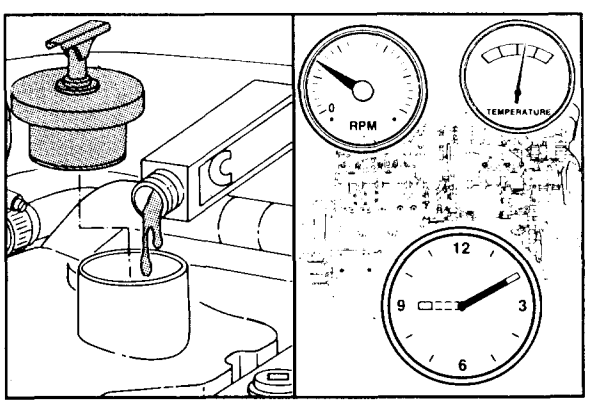

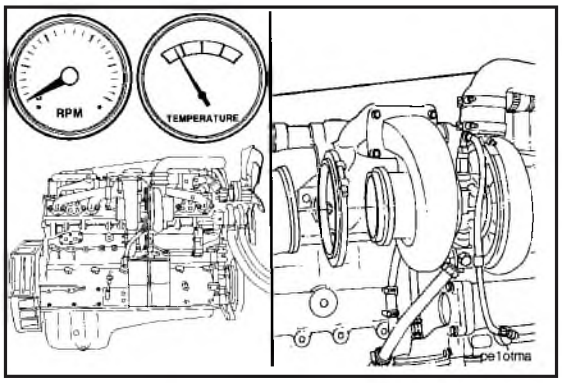

3. Shut off the engine.
4. Allow the turbocharger to cool, and remove the exhaust pipe from the turbine housing.

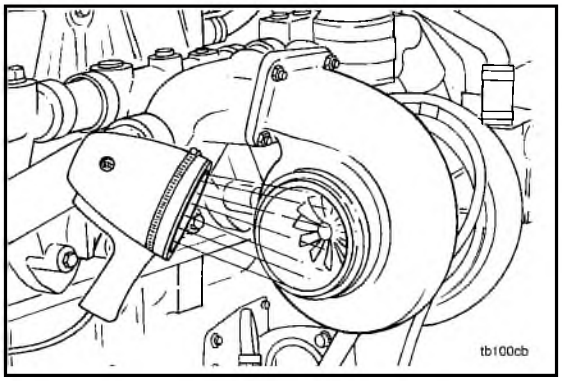

5. Use a high intensity black light (Part No. 3377253 or 3377394) to inspect the turbine outlet for oil.

NOTE: A dark blue glow indicates fuel, and a yellow glow indicates oil. Refer to Procedure 5-13.

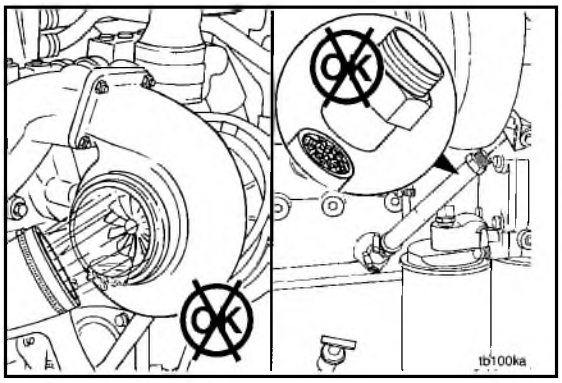

6. If oil is found on the turbine housing, remove the oil drain tube and check for restrictions. Clear any restrictions found or replace damaged component as required.

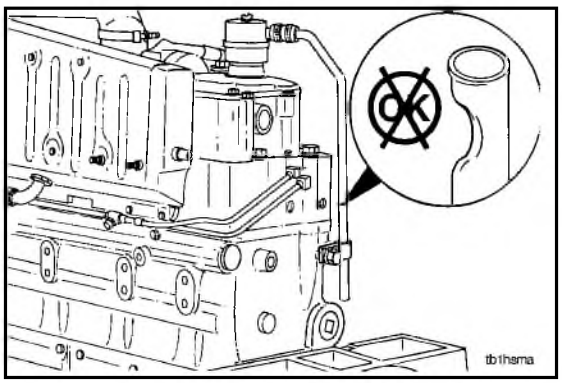

7. If no drain tube restriction is found, check for restrictions in the engine breather or the breather tube. Clear any restrictions found or replace damaged component as required.

8. If no turbocharger drain or engine breather tube restriction is found, check the turbocharger axial motion and radial clearance. Refer to Procedure 3-12.

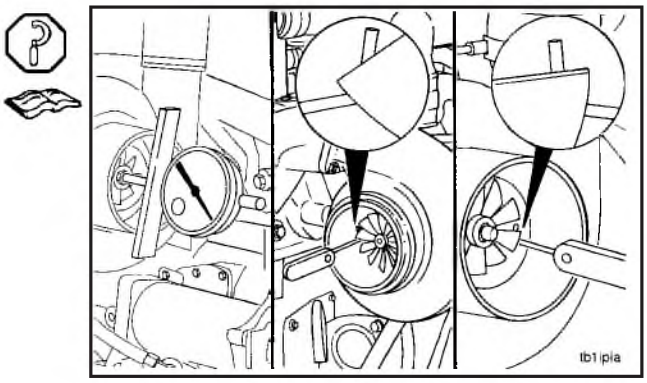

Compressor Seal Leakage - Check (3-06)

1. Remove the air intake and air cross-over piping from the turbocharger.

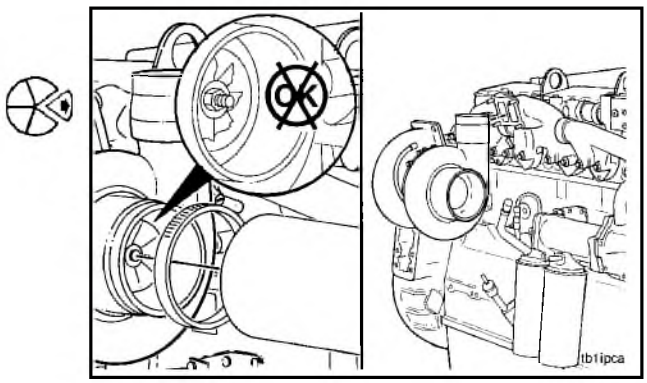

2. Examine the compressor intake and discharge for oil.

   If oil is present, check the axial motion and radial clearance. Refer to Procedure 3-12.

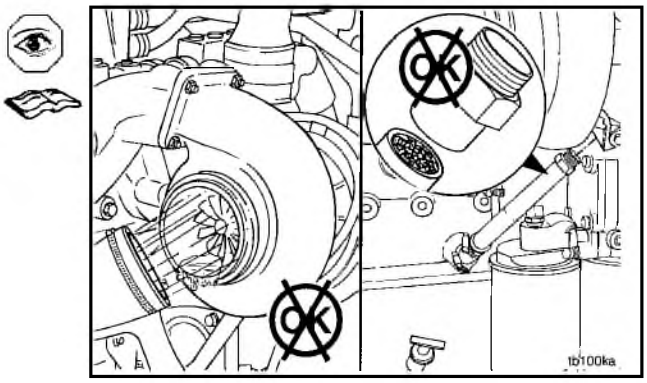

3. Check for intake restriction. Refer to Procedure 3-8.

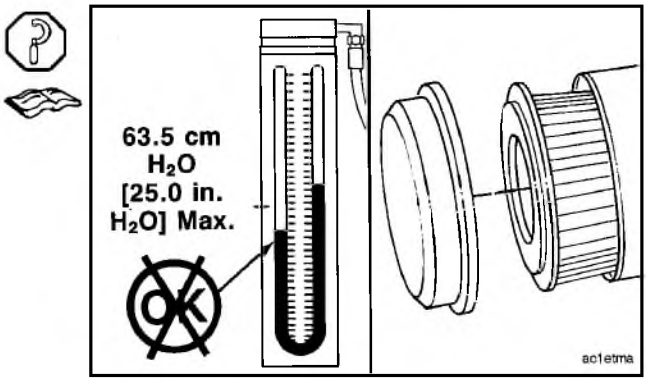

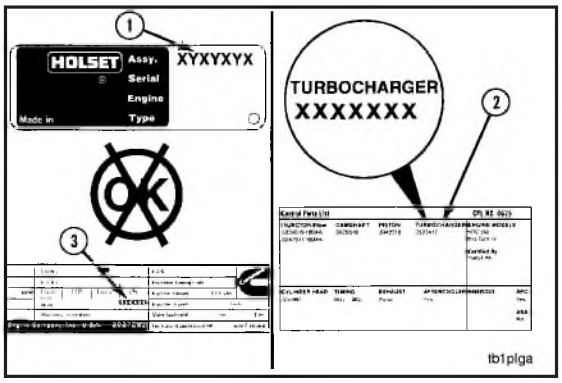

Correct Turbocharger Installed - Check (3-07)

1. Compare the assembly number (1) on the turbocharger dataplate with the turbocharger specified in the engine CPL (Control Parts List) manual (2).

NOTE: The CPL number for each engine is listed on the engine dataplate (3).

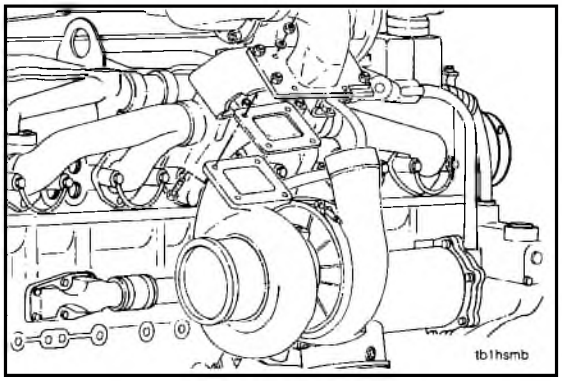

2. If the correct turbocharger was **not** installed, remove it and install the correct turbocharger. Refer to Procedure 3-13 for turbocharger removal and installation instructions.

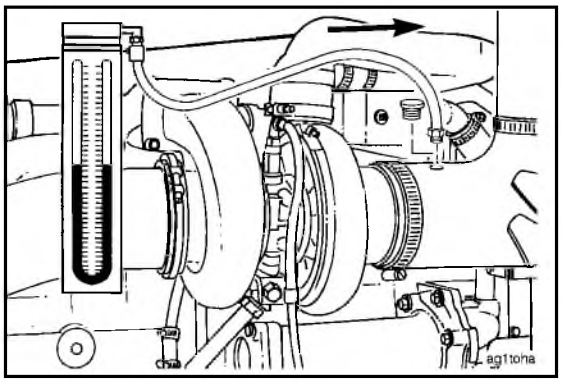

Intake Air Restriction - Check (3-08)

1. Install a vacuum gauge or water manometer in the intake air piping.

NOTE: The gauge adapter **must** be installed at a 90-degree angle to the air flow in a straight section of pipe, one pipe diameter before the turbocharger.

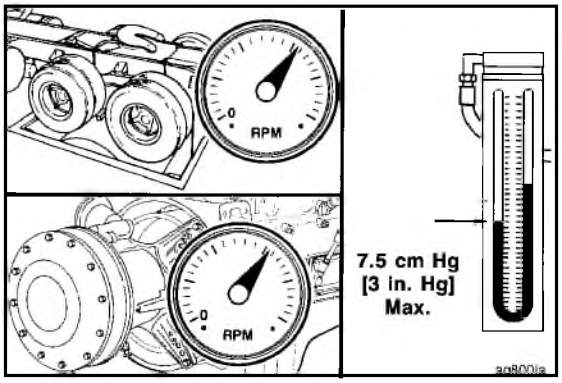

2. Operate the engine at full throttle and rated RPM with maximum load.
3. Record the reading on the gauge or manometer.

NOTE: Restriction **must not** exceed 635 cm H_2O [25.0 inches H_2O].

4. If the restriction exceeds specifications, do the following:
   - Replace or clean the air filter element. Refer to the equipment manufacturer's instructions.

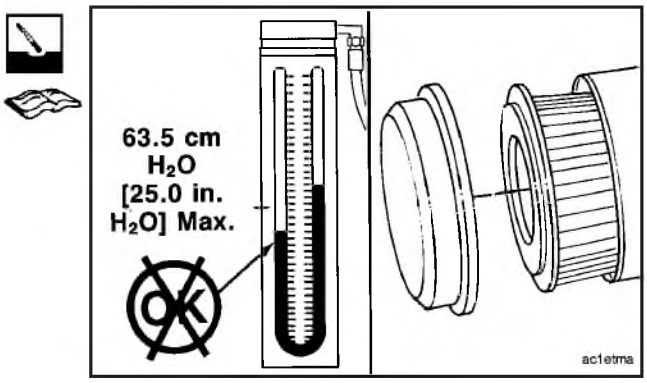

   - Visually inspect the intake air piping for damage. Refer to the equipment manufacturer's repair instructions.

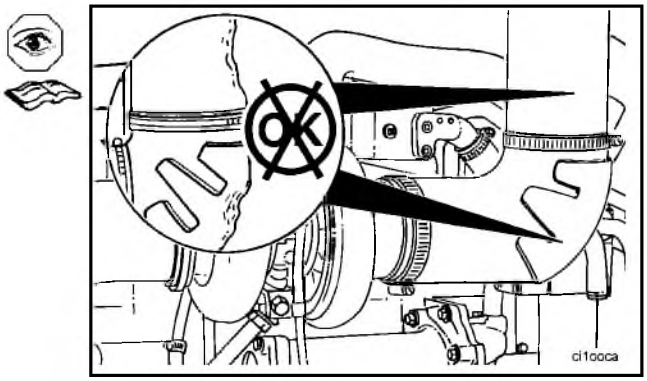

5. Remove the test equipment.

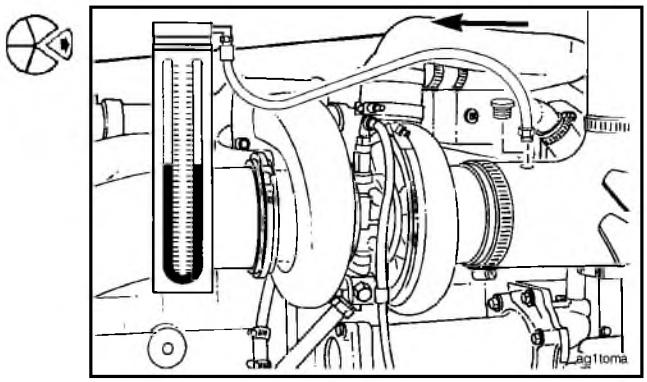

Exhaust Restriction - Check (3-09)

1. Install a mercury manometer in the exhaust piping.

NOTE: The gauge adapter **must** be installed near the turbocharger or exhaust manifold in a straight section of pipe.

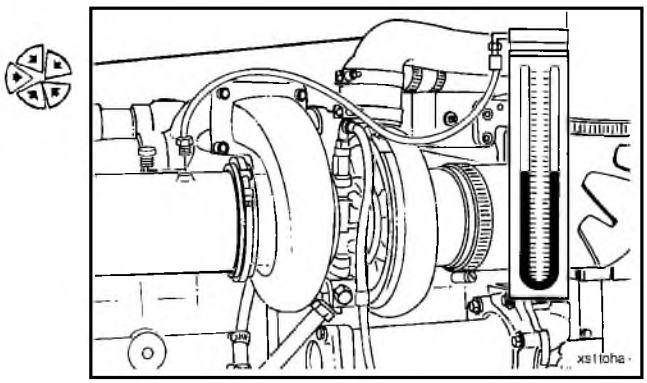

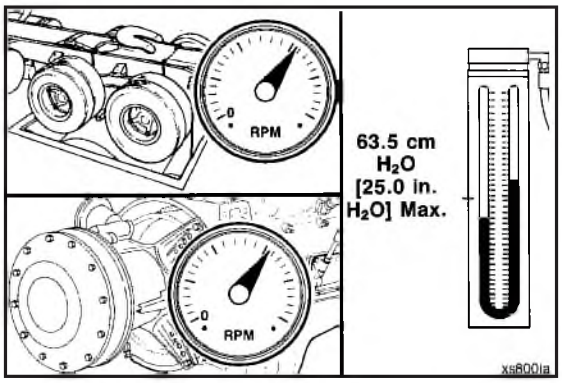

2. Operate the engine at rated RPM and load, and record the manometer reading.

NOTE: Exhaust pressure **must not** exceed 7.5 cm [3.0 inches Hg].

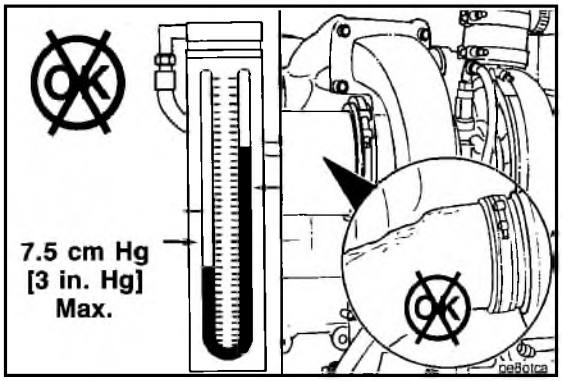

3. If exhaust pressure exceeds the specifications, visually inspect the exhaust piping for damage. Refer to the equipment manufacturer's repair instructions.

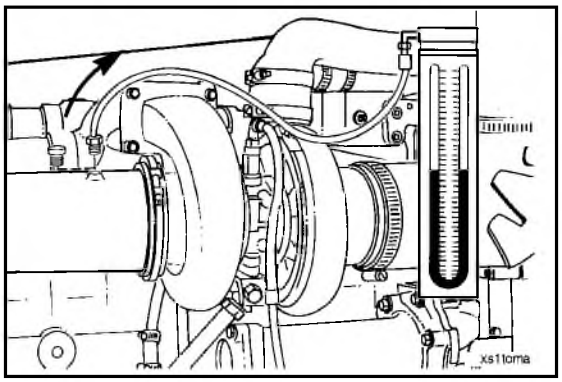

4. Remove the test equipment.

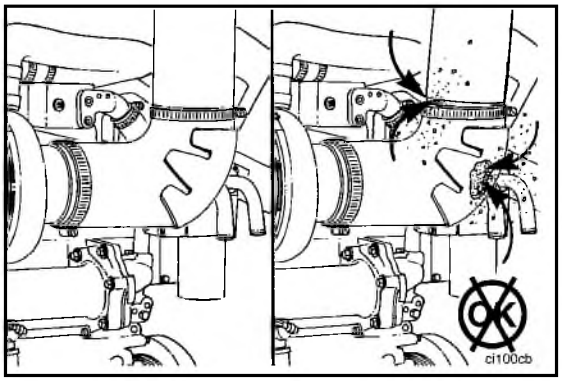

Air Leaks - Check (3-10)

Caution: Engine intake air must be filtered to prevent dirt and debris from entering the engine. If intake air piping is damaged or loose, unfiltered air will enter the engine and cause premature wear.

1. Visually inspect for loose or damaged intake air piping.
2. Replace damaged pipes, and tighten loose clamps to 8 N•m [70 in-lb] torque.

3. Operate the engine at full throttle and maximum load.
4. Listen for a ''high pitch'' noise from the turbocharger.

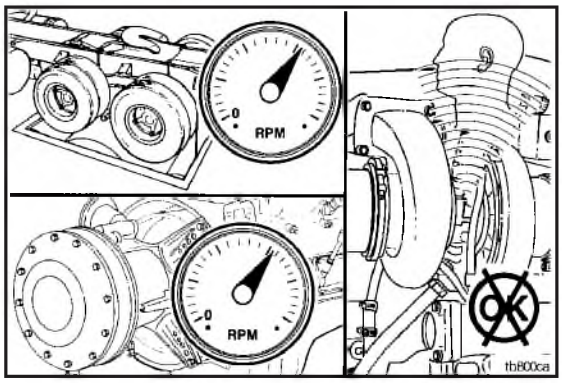

5. The noise can be caused by an air leak from the following:
   a. Turbocharger to aftercooler air supply hose.
   - Inspect the hose for damage.
   - Tighten the hose clamps to 8 N•m [70 in-lb] torque.

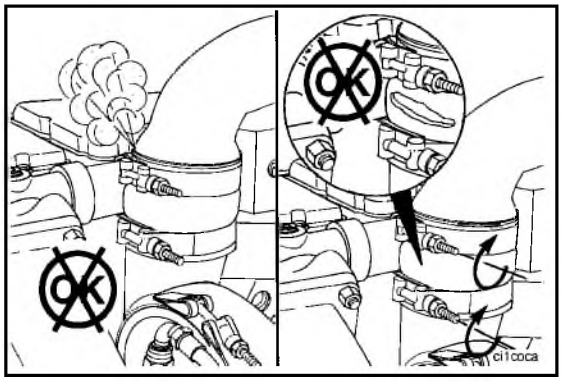

   b. Air crossover to aftercooler connection leakage.
   - Replace the air crossover gasket, and tighten the capscrews to 35 N•m [25 ft-lb] torque, (Big Cam III).
   - Tighten the hose clamps to 8 N•m [70 in-lb] torque, (Big Cam IV).

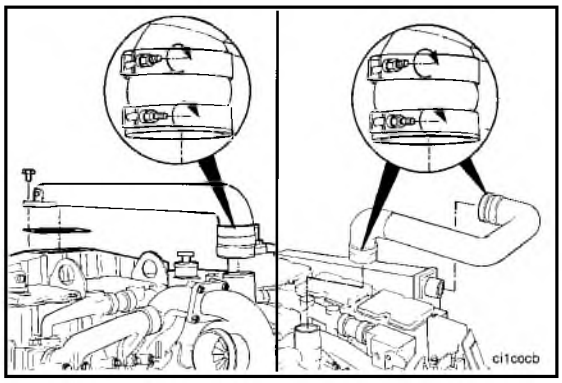

   c. Turbocharger to exhaust manifold mounting gasket.
   - Replace the gasket. Refer to Procedure 3-13.

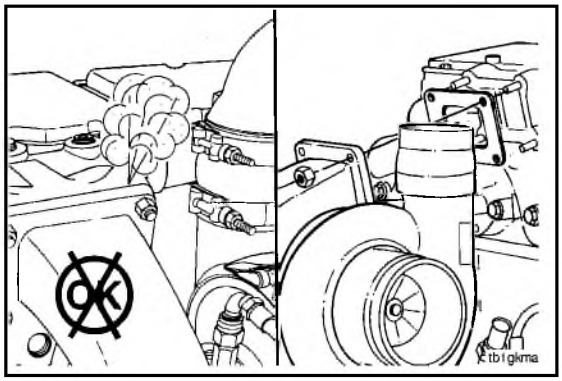

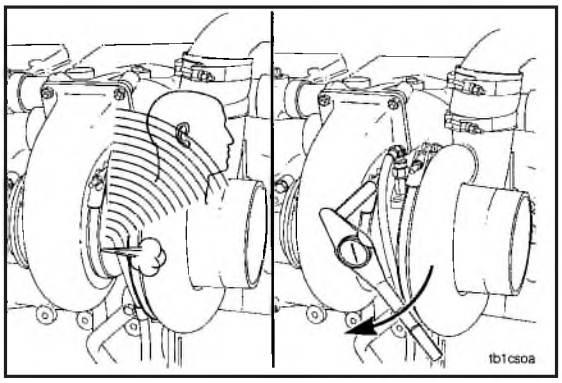

d. Turbine housing sealing surface air leak.

- Tighten the V-band clamp or capscrew as follows:

Turbocharger	V-Band	Capscrew
T46B	4 N•m [34 in-lb]	NA
HT3B	13.5 N•m [120 in-lb]	NA
HT4B	16 N•m [144 in-lb]	NA
HC3	13.5 N•m [120 in-lb]	NA
T18A	NA	12 N•m [105 in-lb]

- Check for an air leak.
- If an air leak is still present, remove and replace the turbocharger. Refer to Procedure 3-13.

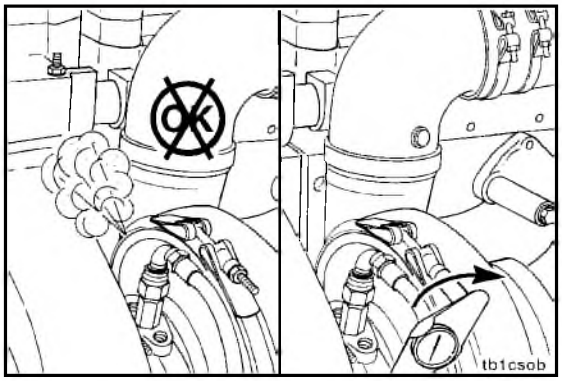

e. Compressor housing sealing surface air leak.

- Tighten the V-band clamp or capscrew as follows:

Turbocharger	V-Band	Capscrew
T46B	4 N•m [34 in-lb]	NA
HT3B	NA	8 N•m [70 in-lb]
HT4B	14 N•m [120 in-lb]	NA
HC3	7 N•m [60 in-lb]	NA
T18A	5.5 N•m [50 in-lb]	NA

- Check for an air leak.
- If an air leak is still present, remove and replace the turbocharger. Refer to Procedure 3-13.

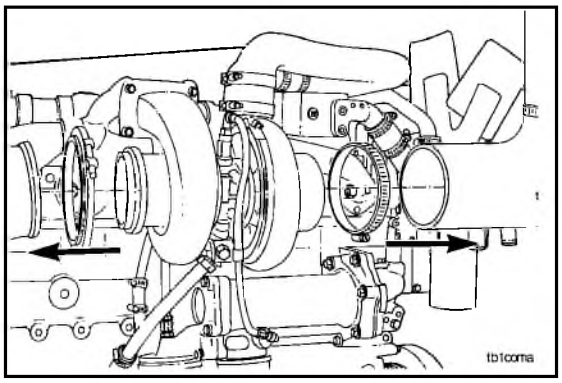

Turbocharger Blade Damage - Check (3-11)

1. Remove the intake and the exhaust pipes from the turbocharger.

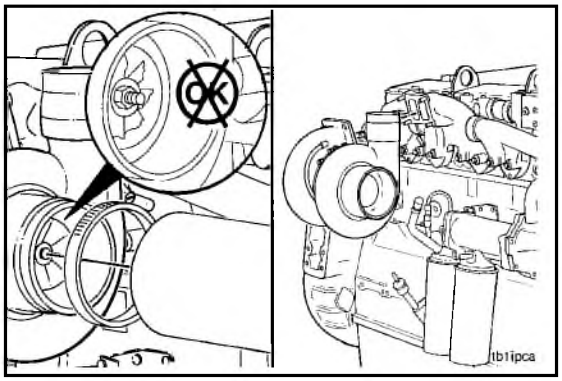

2. Visually inspect the turbocharger compressor impeller blades for damage.
3. Rebuild or replace the turbocharger if damage is found. Refer to Procedure 3-13.

4. If the compressor impeller is damaged, inspect the intake air piping and the filter element for damage.

NOTE: Repair any damage before operating the engine.

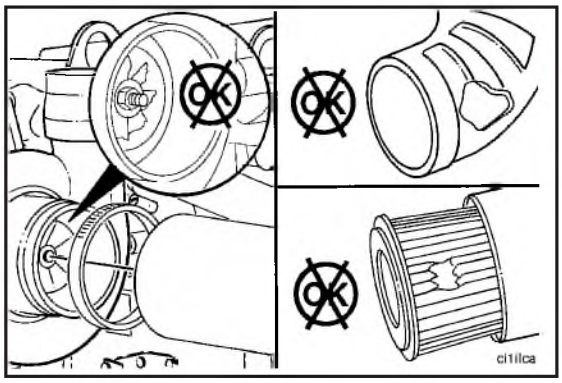

5. Inspect the turbine wheel for damage.
6. Rebuild or replace the turbocharger if damage is found. Refer to Procedure 3-13.

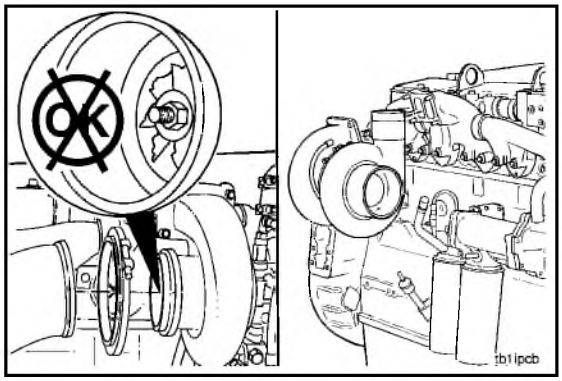

Turbocharger Axial and Radial Clearance - Check (3-12)

1. Remove the intake and the exhaust piping from the turbocharger.

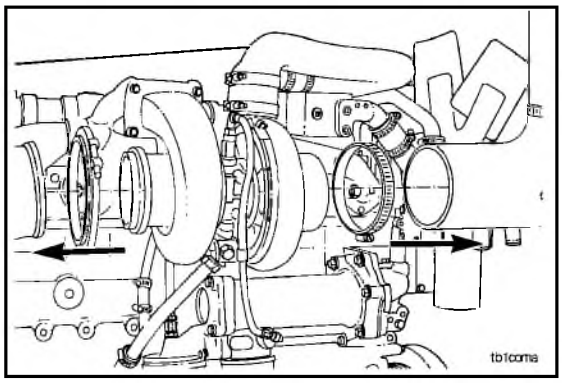

2. Use a wire-type feeler gauge to measure the radial clearance (side to side).

NOTE: Hold the shaft toward the feeler gauge to check this dimension.

Rebuild or replace the turbocharger if the radial clearance is greater than specified.

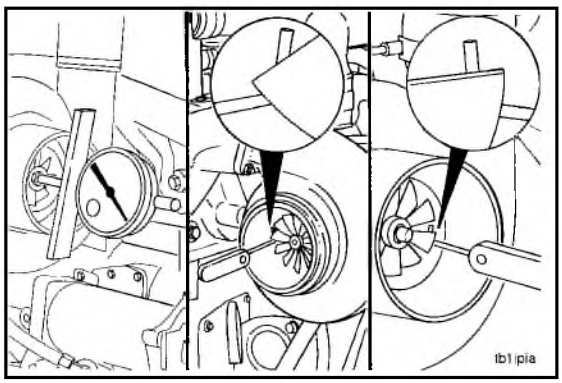

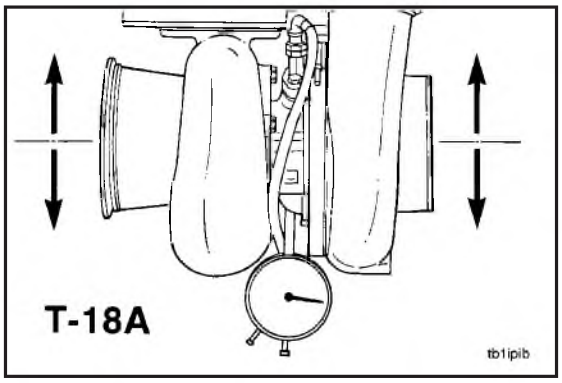

Turbocharger Model No.	Dimension Minimum	Dimension Maximum
T46B		
• Compressor Impeller	0.15 mm [0.006 in.]	0.45 mm [0.018 in.]
• Turbine Wheel	0.20 mm [0.008 in.]	1.09 mm [0.043 in.]
HT3B		
• Compressor Impeller	0.15 mm [0.006 in.]	0.45 mm [0.018 in.]
• Turbine Wheel	0.20 mm [0.008 in.]	0.53 mm [0.021 in.]
HT4B		
• Compressor Impeller	0.15 mm [0.006 in.]	0.46 mm [0.018 in.]
• Turbine Wheel	0.20 mm [0.008 in.]	0.53 mm [0.021 in.]
HC3		
• Compressor Impeller	0.20 mm [0.008 in.]	0.41 mm [0.016 in.]
• Turbine Wheel	0.28 mm [0.011 in.]	0.48 mm [0.019 in.]
T18A*		
• Compressor Impeller and Turbine Wheel	0.20 mm [0.008 in.]	0.45 mm [0.18 in.]

*Radial clearance on T18A **must** be measured with the dial indicator through the turbocharger oil drain hole.

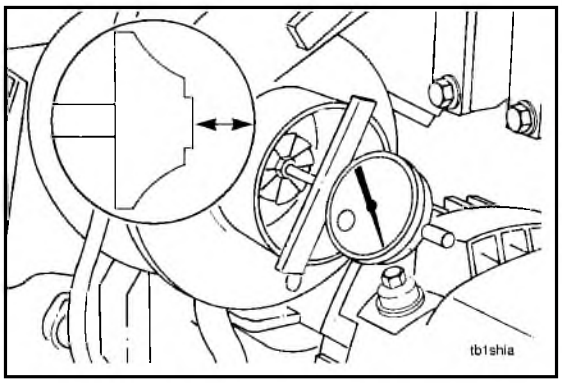

1. Measure axial clearance (end to end).

   Rebuild or replace the turbocharger if axial clearance is greater than specified.

Turbocharger Model No.	Dimension Minimum	Dimension Maximum
T46B	0.15 mm [0.006 in.]	0.35 mm [0.014 in.]
HT3B	0.03 mm [0.001 in.]	0.10 mm [0.004 in.]
HT4B	0.05 mm [0.002 in.]	0.13 mm [0.005 in.]
HC3	0.03 mm [0.001 in.]	0.10 mm [0.004 in.]
T18A	0.10 mm [0.004 in.]	0.23 mm [0.009 in.]

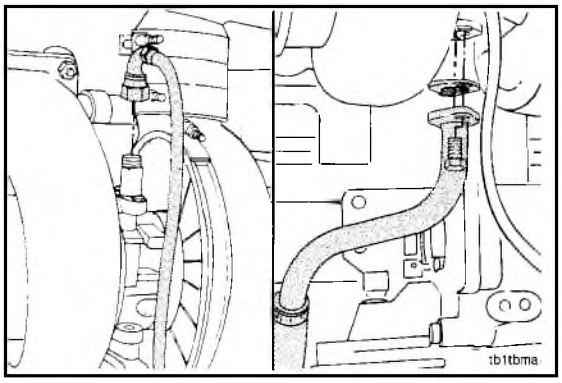

Turbocharger - Replace (3-13)

Remove

1. Remove the oil supply and the oil drain tubes from the turbocharger.

2. Remove the intake and the exhaust pipes from the turbocharger.

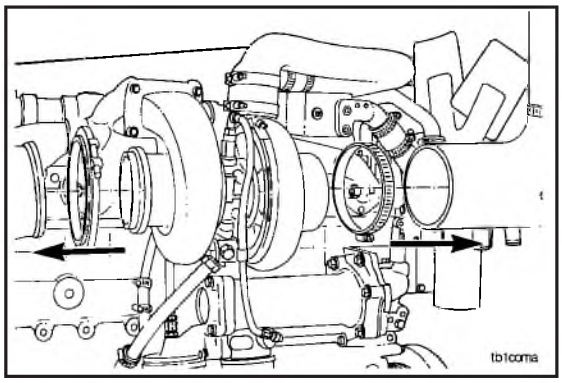

3. Loosen the clamp on the air crossover hose connection.
4. Remove the four turbocharger mounting nuts.
5. Remove the turbocharger and the gasket.

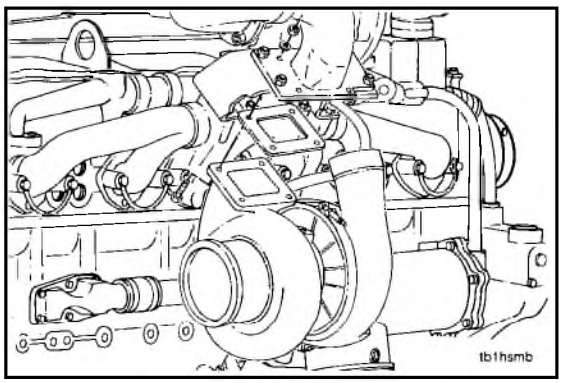

Clean and Inspect

1. Clean the turbocharger and the exhaust manifold gasket surfaces.

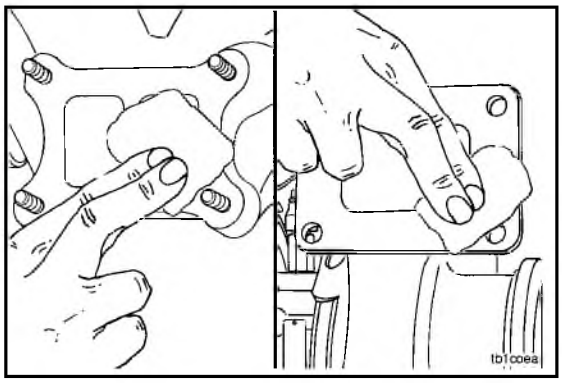

2. Cracks on the turbocharger mounting flange longer than 15 mm [0.6 inch] are **not** acceptable.

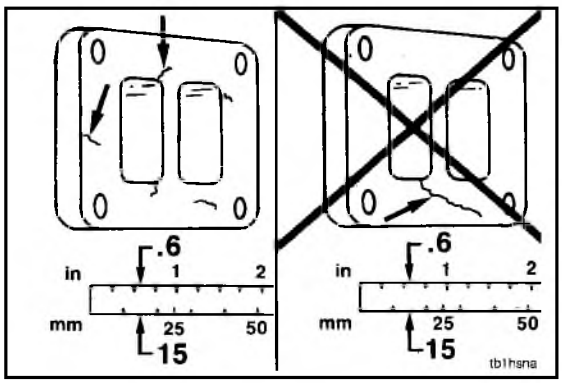

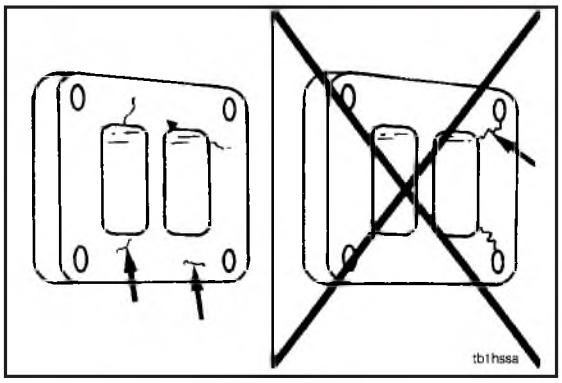

3. Cracks on the turbocharger mounting flange **must not** reach the mounting holes.

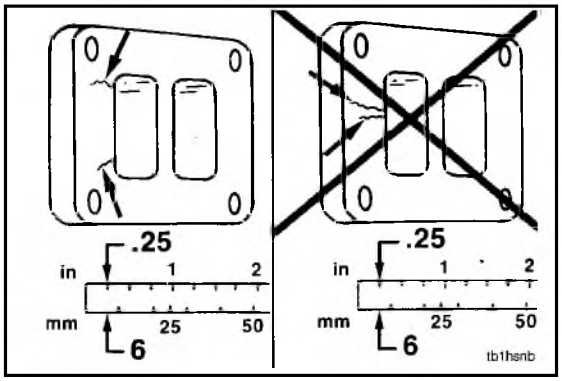

4. Two cracks on the turbocharger mounting flange **must** be separated by 6.4 mm [0.25 inch].

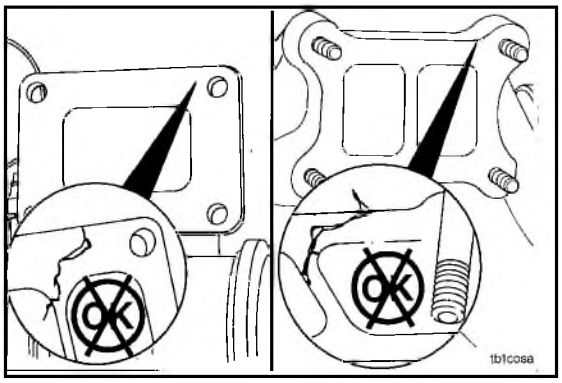

5. Visually inspect the exhaust manifold gasket surfaces and the mounting studs for cracks or damage.

   Replace any cracked manifolds or damaged mounting studs.

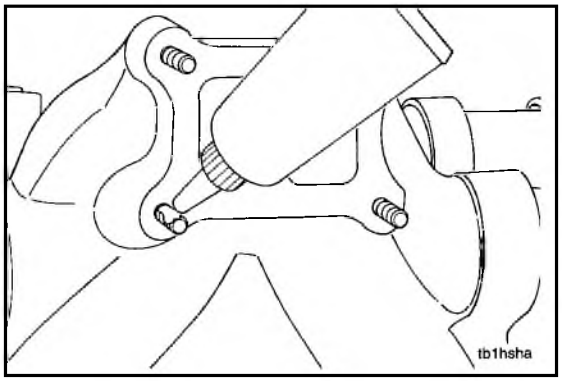

Install the Single Stage Turbocharger

1. Apply a film of high temperature anti-sieze compound to the turbocharger mounting studs.

2. Install a new mounting gasket, the turbocharger, and the four mounting nuts.

NOTE: Do **not** tighten the mounting nuts until the aftercooler air inlet hose is installed on the turbocharger.

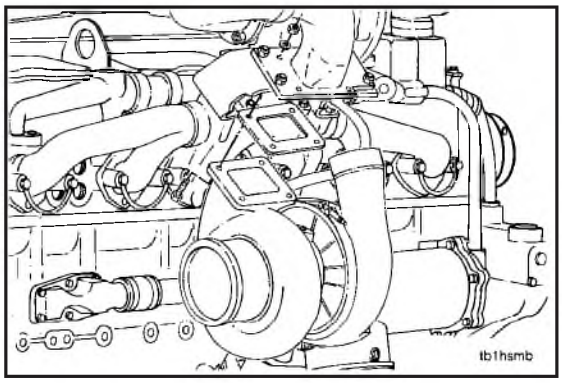

3. Install a new gasket, air crossover, and the four capscrews, (Big Cam III).

   Install the air crossover, hoses, and clamps, (Big Cam IV).

   Tighten the turbocharger mounting nuts to 44 N•m [32 ft-lb] torque, and the air crossover hose clamp to 8 N•m [70 in-lb] torque, and the air crossover capscrews to 35 mm [25 ft-lb] torque.

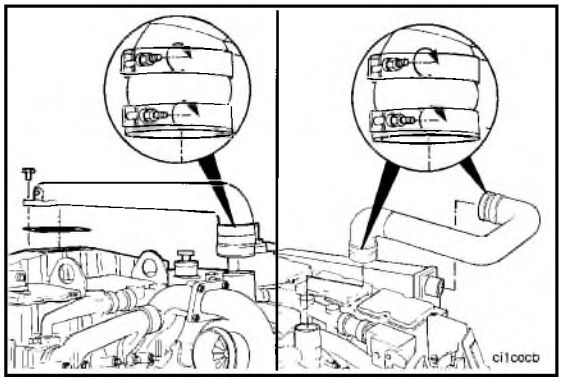

4. Install the turbocharger oil drain tube as follows:

Tube Type Fitting

   a. Use nylon tape to wrap the threads.

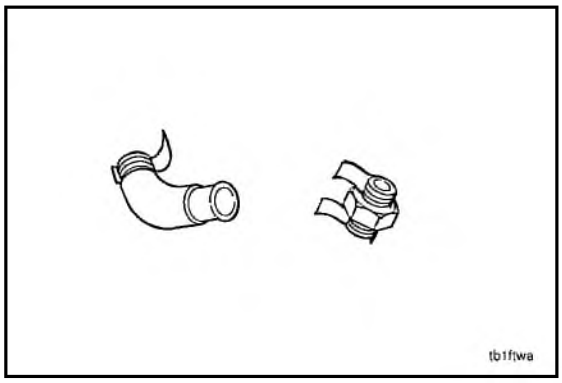

   b. Tighten the tube nut to 80 N•m [60 ft-lb) torque.

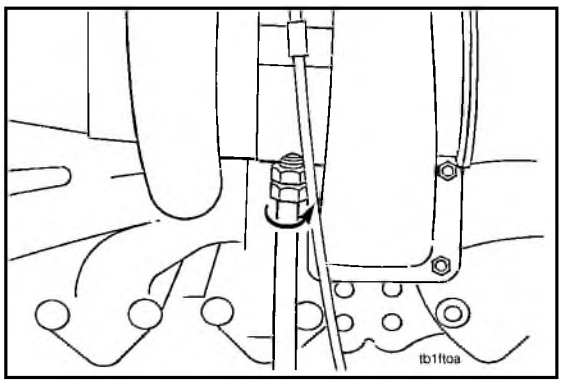

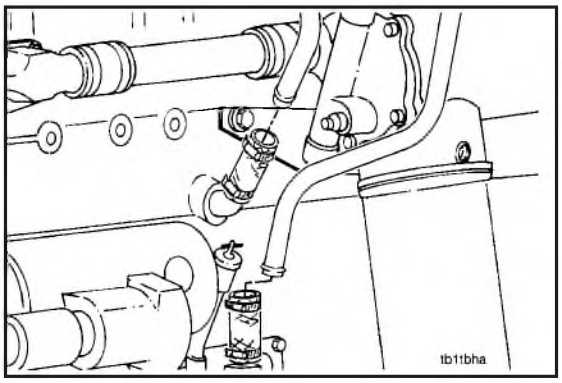

Flange Type Fitting

a. Use a new gasket and tighten the capscrews to 44 N•m [32 ft-lb] torque.

Tighten the hose clamps to 4 N•m [32 in-lb] torque.

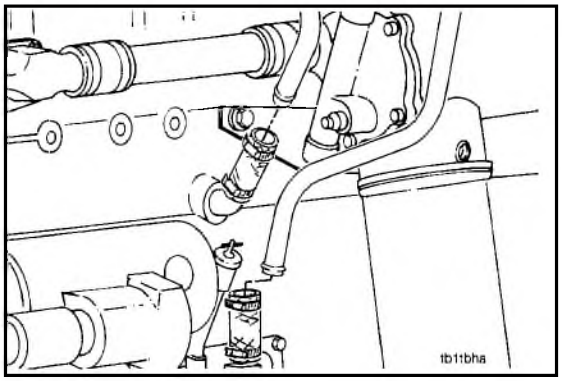

5. Pour 50 to 60 cc [2.0 to 3.0 ounces] of clean engine oil in the turbocharger oil supply tube fitting.

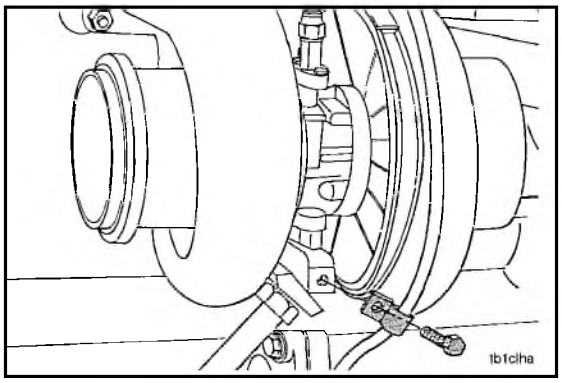

6. Clip the supply line to the turbocharger as appropriate for the plumbing scheme.

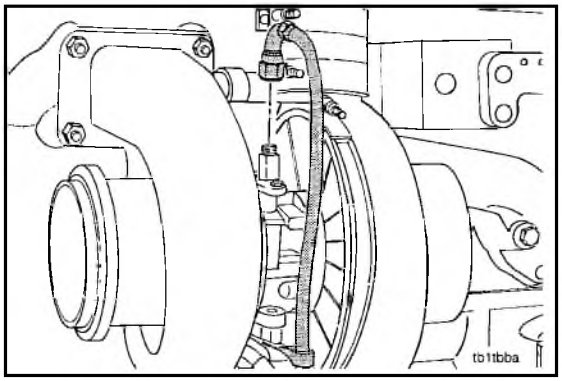

7. Install the turbocharger oil supply hose . Tighten the flange capscrews to 44 N•m [32 ft-lb] torque. Tighten the swivel nut to 30 N•m [22 ft-lb] torque.

8. Clamp the oil supply line to the bearing housing or the compressor housing.

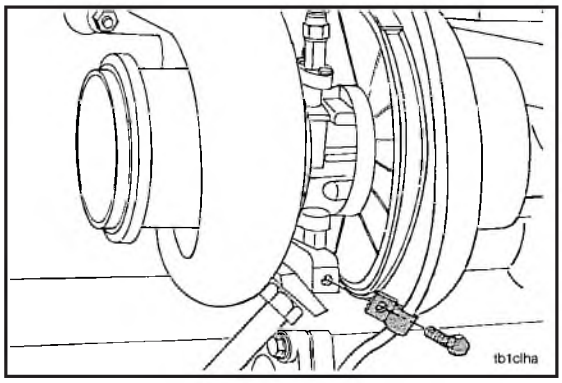

Series Turbocharger - Replace (3-14)

Remove

1. Remove the oil supply hoses.

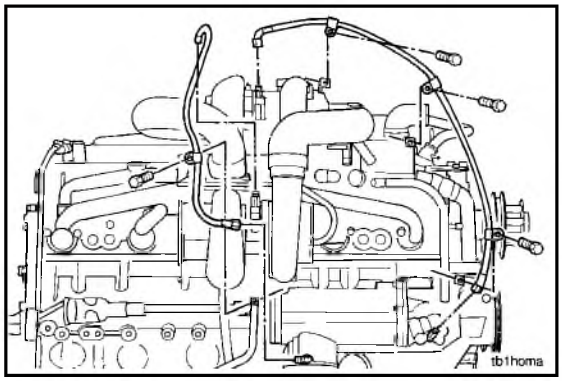

2. Remove the air crossover connection, air inlet pipe, O-rings, and retaining braces.

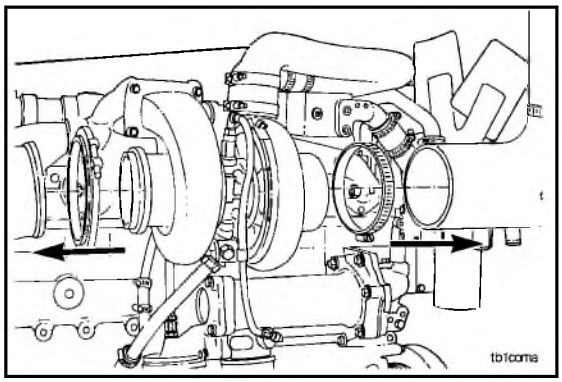

3. Remove the air connection, hose, and clamps.

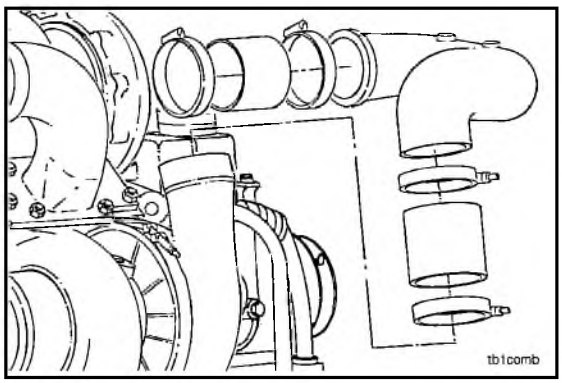

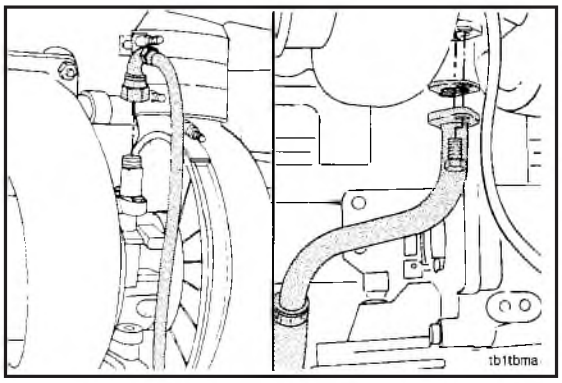

4. Remove the oil drain tube from the low pressure turbocharger.

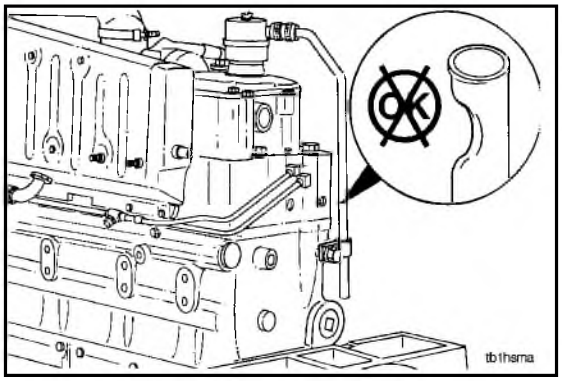

5. Remove the low pressure turbocharger.

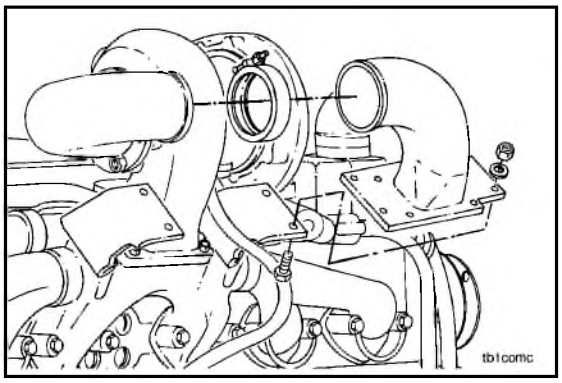

6. Remove the exhaust inlet connection and clamp.

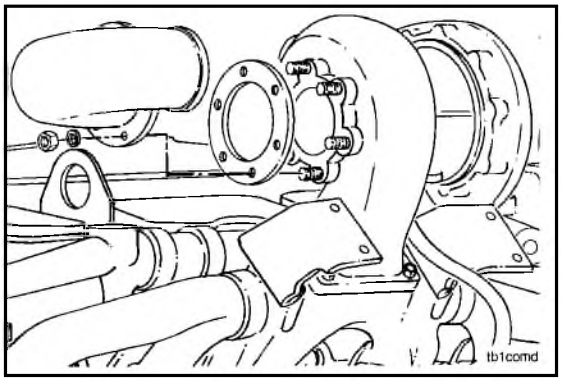

7. Remove the exhaust outlet connection.

8. Remove the oil drain tube from the high pressure turbocharger.

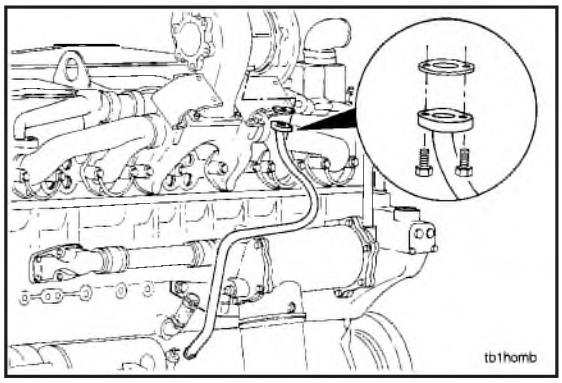

9. Remove the supports.

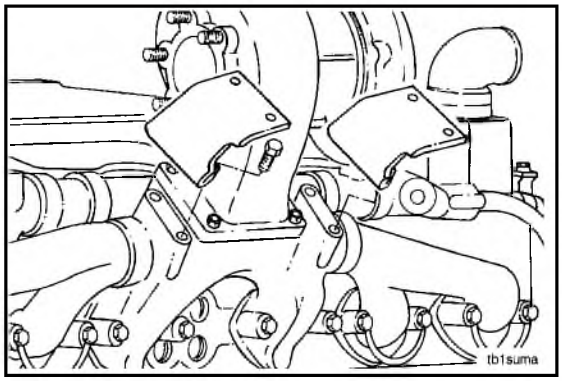

10. Remove the high pressure turbocharger.

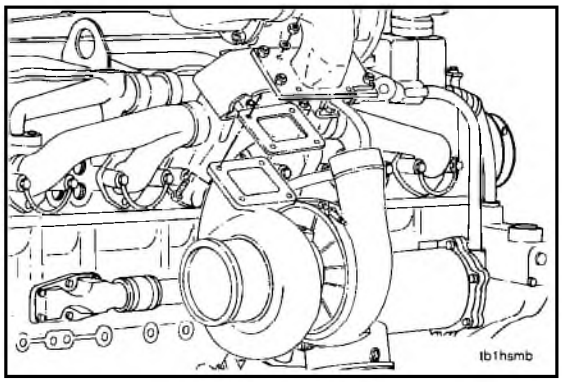

To Install Series Turbochargers

1. Apply a film of high temperature anti-sieze compound on the mounting studs.

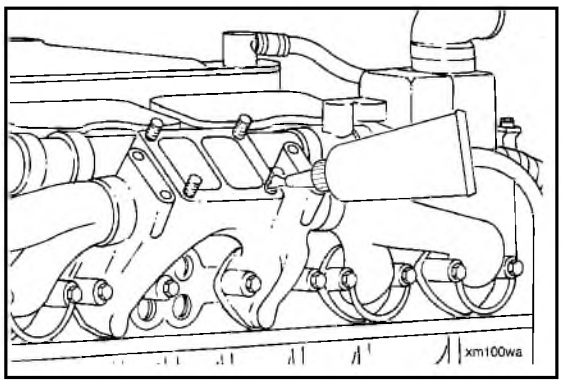

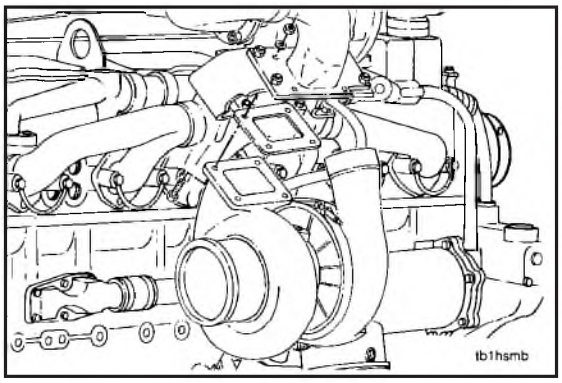

2. Install a new gasket (raised bead on the gasket toward the turbocharger). Mount the H.P. turbocharger on the exhaust manifold. Tighten the nuts to 10 N•m [7 ft-lb] torque.

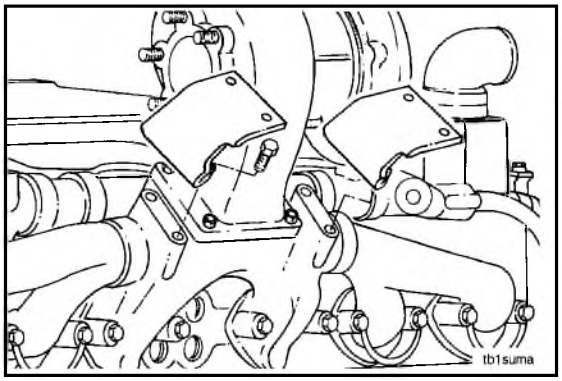

3. Install the supports on the exhaust manifold. Tighten the nuts to 10 N•m [7 ft-lb] torque.

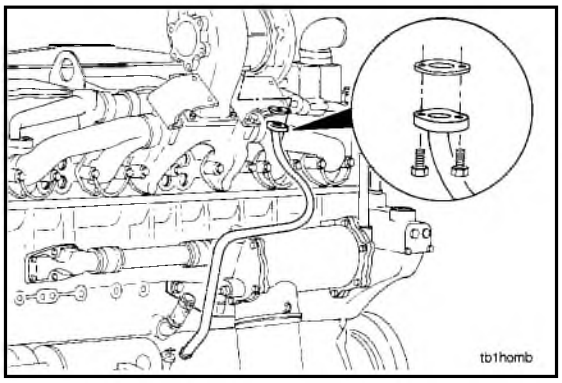

4. Install the oil drain tube on the turbocharger. Tighten the capscrews for the tube flange to 10 N•m [7 ft-lb] torque.

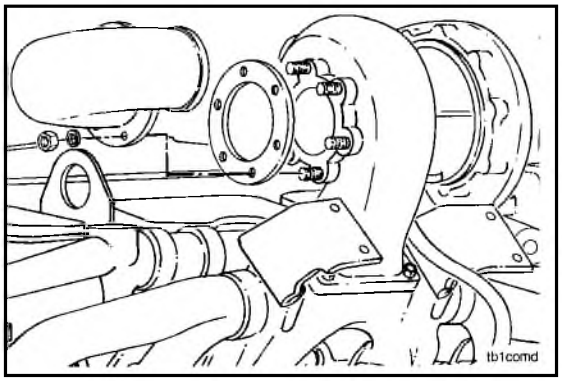

5. Install a new gasket with the beaded side of the gasket toward the turbocharger. Install the exhaust outlet connection on the turbocharger.

6. Install the exhaust inlet connection and clamp on the outlet connection. Align the connection with the supports; and install the capscrews, the washers, and the nuts to fasten the connection on the supports.

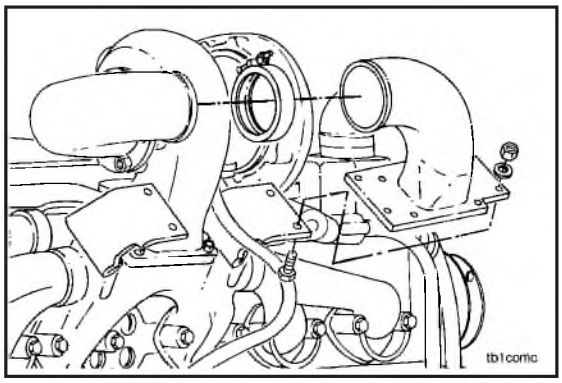

7. Align and tighten the parts in the following sequence:
   a. Tighten the clamp for the exhaust connection to 8 N•m [70 in-lb] torque.
   b. Tighten the mounting nuts for the turbocharger to 44 N•m [32 ft-lb] torque.
   c. Tighten the mounting nuts that fasten the exhaust connection to the turbocharger to 44 N•m [32 ft-lb] torque.
   d. Tighten the capscrews which fasten the supports to the exhaust manifold to 75 N•m [55 ft-lb] torque.
   e. Tighten the capscrews and the nuts which fasten the exhaust inlet connection to the supports to 44 N•m [32 ft-lb] torque.

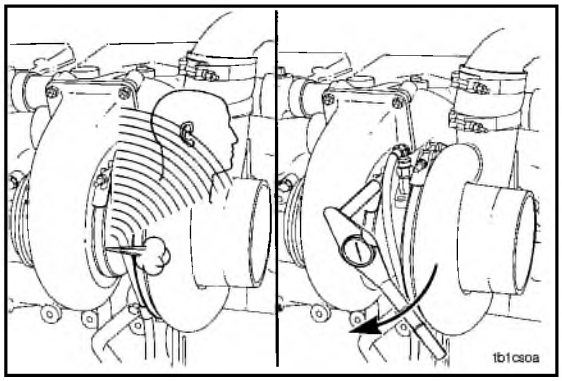

NOTE: The center line of the oil drain hole **must** be within 30 degrees of vertical when the turbocharger is installed on the engine.

Install the Low Pressure (L.P.) Turbocharger

1. Install a new gasket and the L.P. turbocharger (the beaded side of the gasket toward the turbocharger) on the exhaust connection. Tighten the capscrews and the nuts to 10 N•m [7 ft-lb] torque.

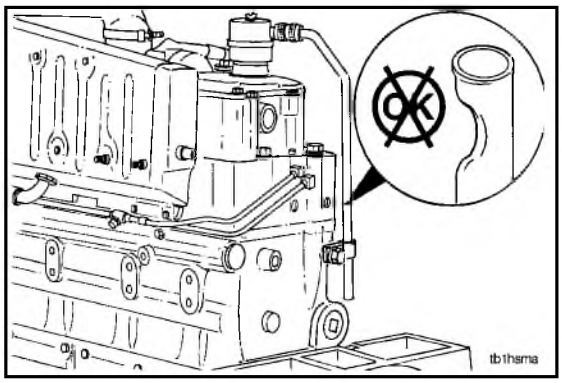

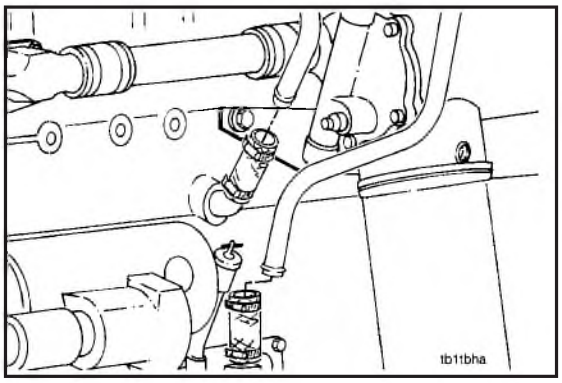

2. Install the oil drain tube on the turbocharger. Tighten the capscrews for the tube flange to 10 N•m [7 ft-lb] torque.

NOTE: The center line of the oil drain hole **must** be within 30 degrees of vertical.

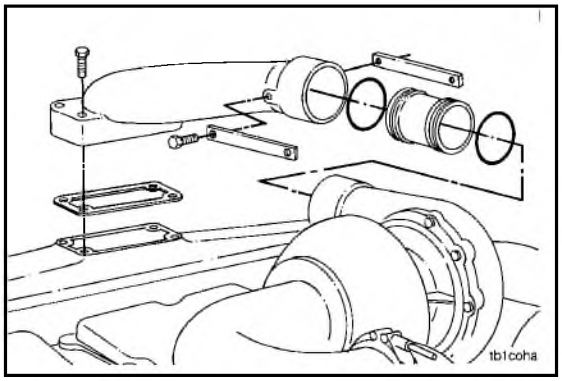

3. Install the air connection, the hose, and the clamps on the L.P. turbocharger.

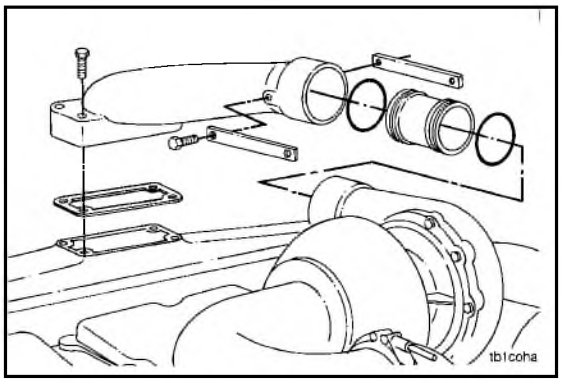

4. Install the air crossover connection, the air inlet pipe, and new O-rings on the H.P. turbocharger. Install the retaining braces on the H.P. turbocharger.

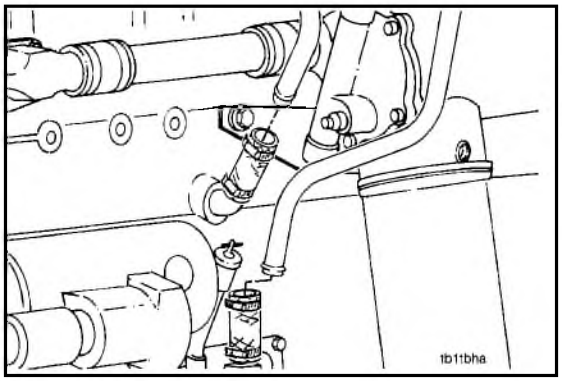

5. Install the oil drain tubes in the hose connections on the cylinder block. Tighten the hose clamps to 4 N•m [32 in-lb] torque.

6. Align and tighten the parts, using the following torque values:
   a. Tighten the mounting capscrews and the nuts for the turbocharger to 44 N•m [32 ft-lb] torque.
   b. Tighten the capscrews for the oil drain tube flange to 44 N•m [32 ft-lb] torque.
   c. Tighten the clamps for the air connection to 8 N•m [70 in-lb] torque.
   d. Tighten the capscrews for the retaining braces to 23 N•m [17 ft-lb] torque.

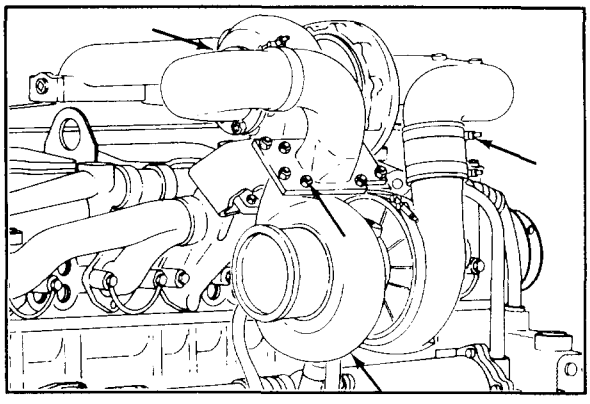

7. Pour 50 to 60 cc [2.0 to 3.0 ounces] of clean engine oil into the turbocharger oil supply tube fitting.

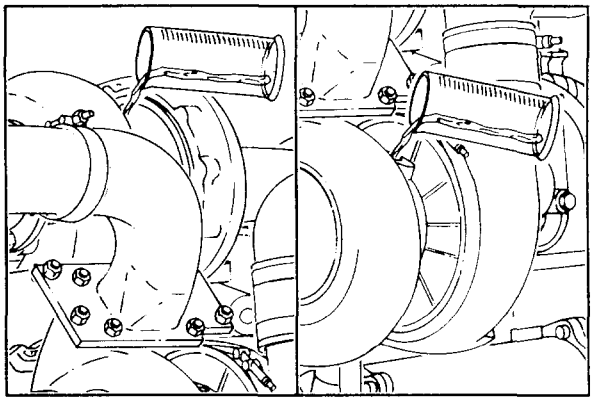

8. Install the oil supply hoses on both of the turbochargers. Tighten the swivel nuts to 30 N•m [22 ft-lb] torque.
9. Install the clamps to hold the hoses as shown. Install the hoses on the connections in the oil cooler and the filter head as shown. Tighten the swivel nuts to 30 N•m [22 ft-lb] torque.

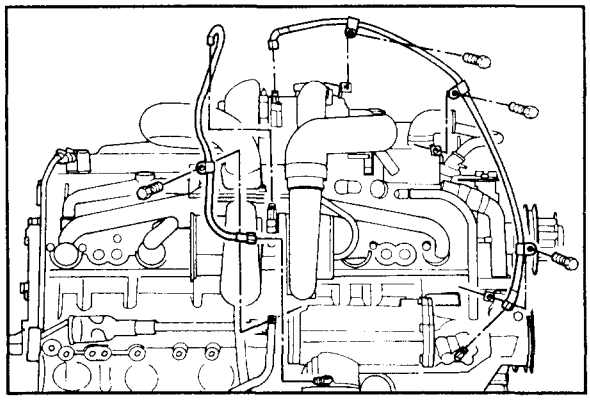

Exhaust Manifold - Replace (3-15)

Remove

1. Remove the air crossover connection or tube. Refer to Procedure 3-13.
2. Remove the turbocharger. Refer to Procedure 3-13.

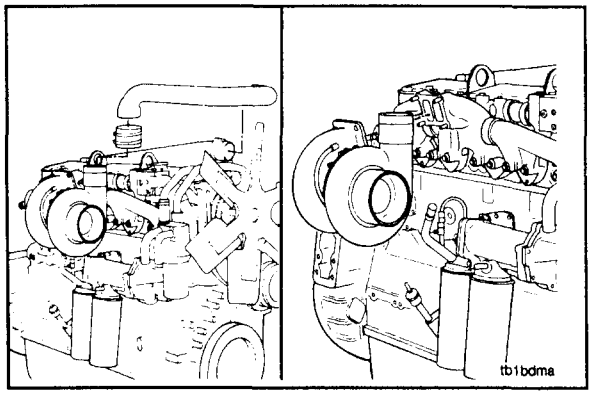

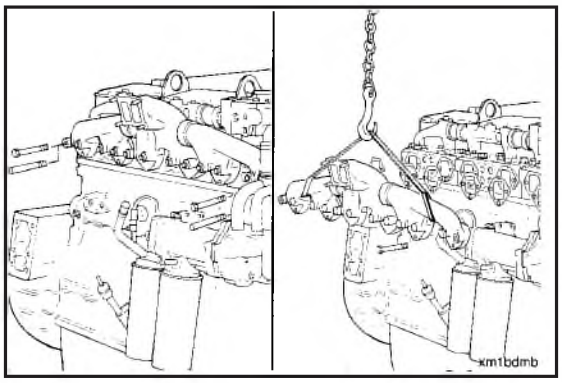

3. Remove the two capscrews, and install two guide studs.

Warning: Because this assembly weighs more than 23 kg [50 lbs], two people or a hoist will be required to lift the exhaust manifold assembly to avoid personal injury.

4. Remove the remaining ten capscrews, the exhaust manifold assembly, and the manifold gaskets.

NOTE: Two dowels are used in each cylinder head to align the exhaust manifold assembly.

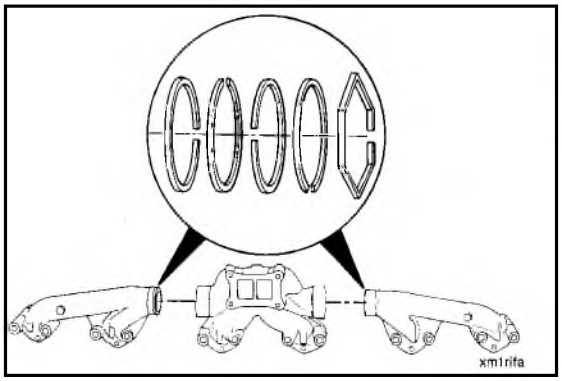

Disassemble

1. Remove the exhaust manifold end sections.
2. Remove the seal rings and the seal ring expander, if used.

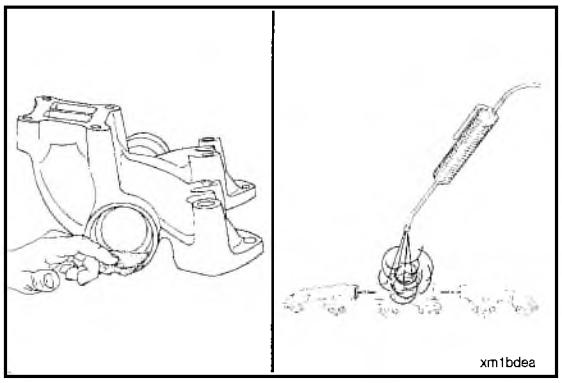

Clean and Inspect

1. Use a 240 grit emery cloth to remove carbon deposits from the sealing surfaces and the seal ring grooves.
2. Steam clean, and dry with compressed air.

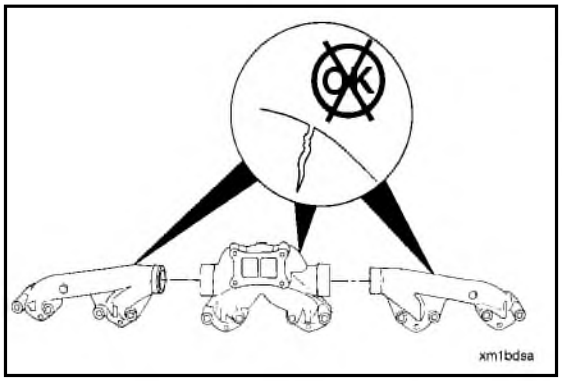

3. Visually inspect for cracks or damage.
4. Visually inspect the manifold seal bore and the mating sealing ring surface for wear.

Assemble

NOTE: The exhaust manifold sections **must** be assembled on a flat surface.

1. Install the exhaust manifold seal rings (if used) as follows:
   a. Install the expander ring in the seal ring groove.
   b. Install the four seal rings in the seal ring groove.
   c. Put the ring gaps 90 degrees apart.

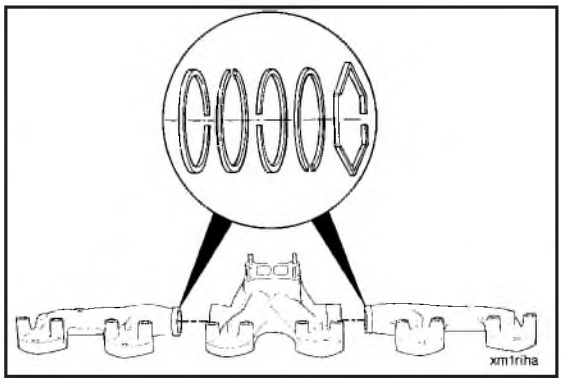

2. Install the exhaust manifold end sections to the center section.

NOTE: The exhaust manifold sections can be assembled without special tools for compressing the seal rings.

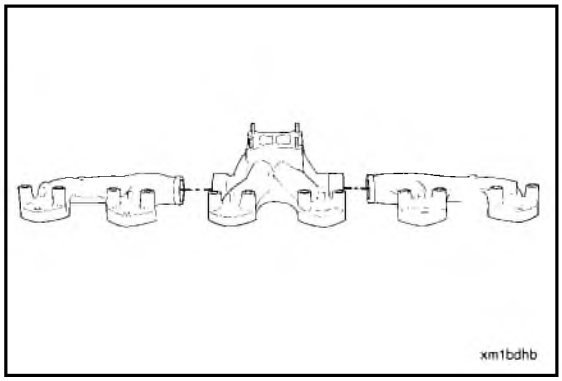

Install

1. Install two guide studs.
2. Use an adhesive to hold the gaskets in place on the cylinder head.

NOTE: The side of the gasket marked ''OUT'' **must** be away from the cylinder heads.

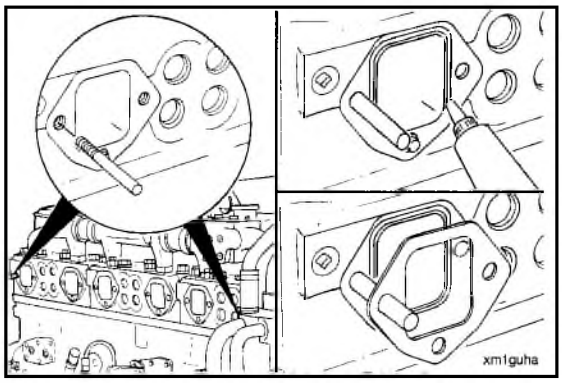

Warning: Because this assembly weighs more than 23 kg [50 lbs], two people or a hoist will be required to lift the exhaust manifold assembly to avoid personal injury.

3. Install the exhaust manifold and ten capscrews.
4. Remove the guide studs, and install the remaining two capscrews.

NOTE: To aid in future capscrew removal, apply a film of high temperature anti-seize compound to the capscrew threads.

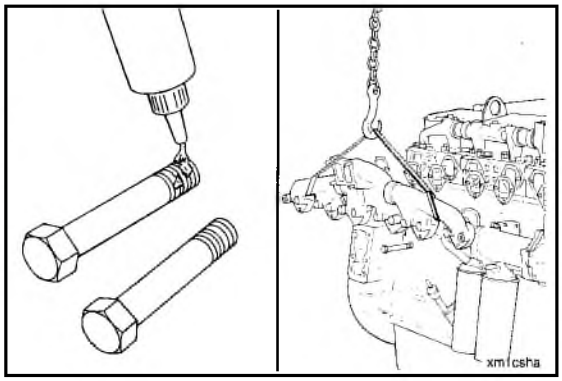

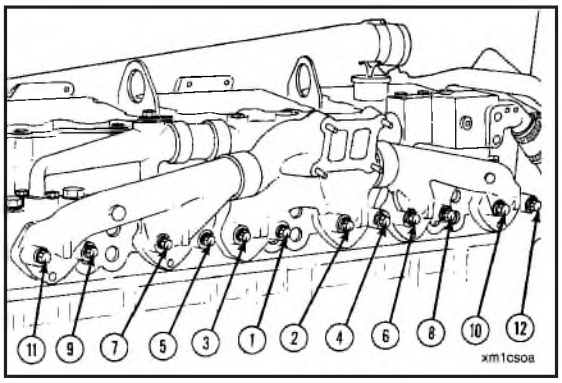

5. Tighten the capscrews in the sequence shown to the following torque values:
   a. Tighten to 45 N•m [35 ft-lbs].
   b. Tighten to 80 N•m [60 ft-lbs].

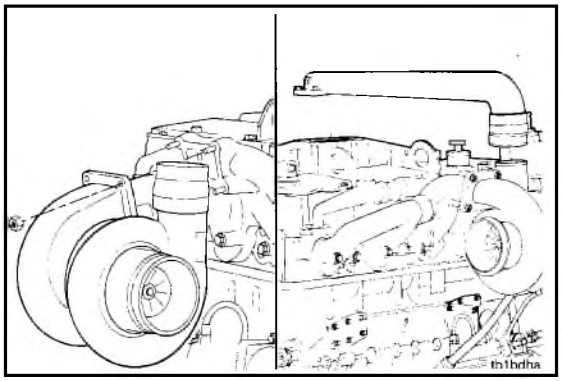

6. Install a new turbocharger mounting gasket and the turbocharger. Refer to Procedure 3-13.
7. Install the air crossover connection or tube. Refer to Procedure 3-13.

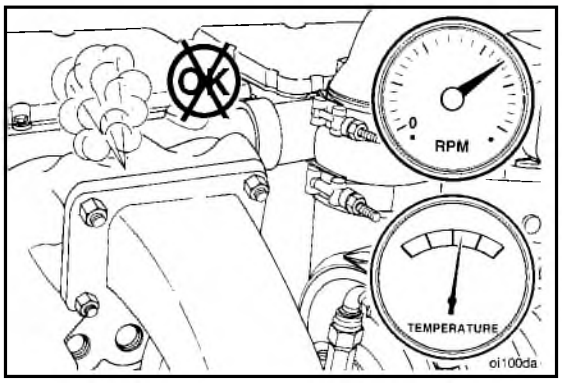

8. Operate the engine to check for leaks and engine operation.

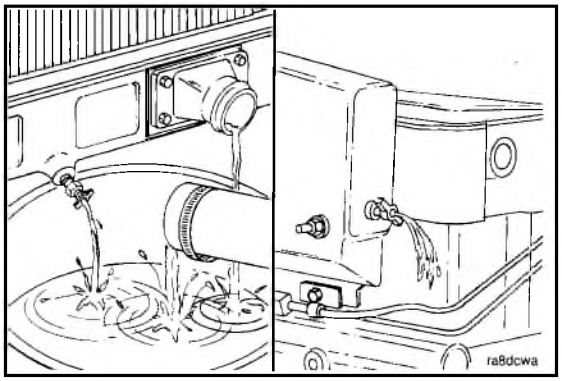

Aftercooler - Replace (3-16)

Remove

1. Drain the cooling system. Refer to Procedure 1-06.

2. Remove the air crossover connection or tube. Refer to Procedure 3-13.

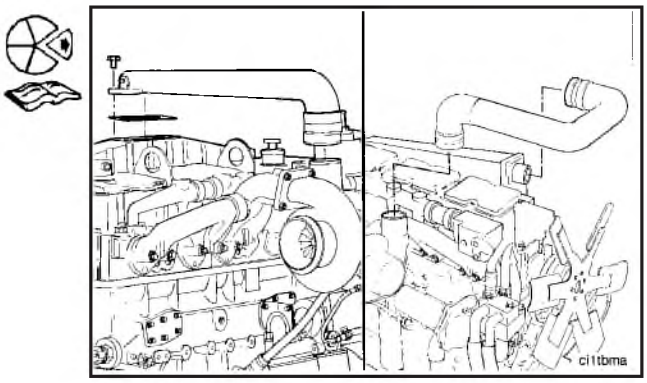

3. Loosen hose clamps (1), (2), and (3).
4. Remove the support clamps from the aftercooler transfer tubes (Big Cam IV only).
5. Remove the hose from the aftercooler coolant inlet and outlet connections.

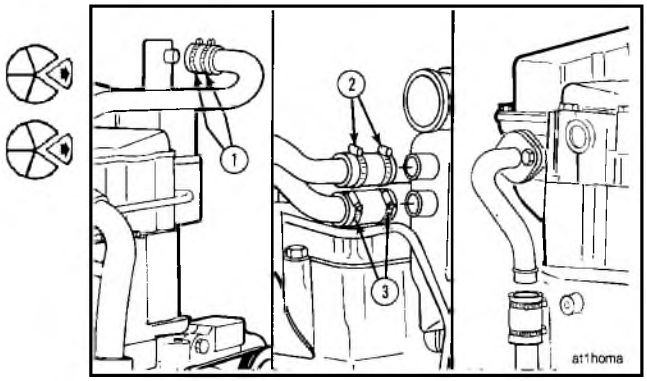

6. Remove the air compressor air inlet tube. Refer to Procedure 4-12.
7. Remove the AFC signal tube and any other hoses which are attached to the aftercooler housing (turbocharger boost pressure, etc.).

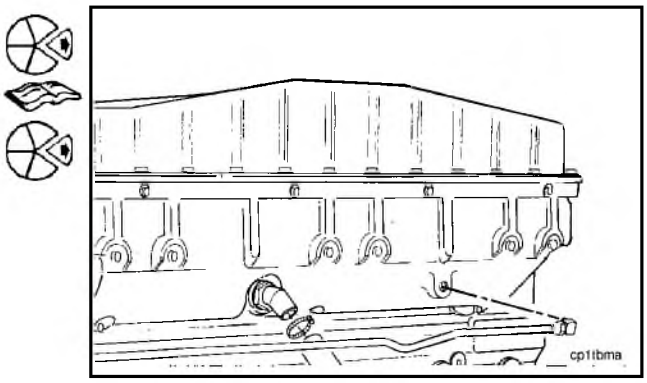

8. Remove one mounting capscrew and washer at each end of the housing.
9. Install a guide stud in each capscrew mounting hole.

NOTE: Two guide studs are required to support the aftercooler assembly during removal.

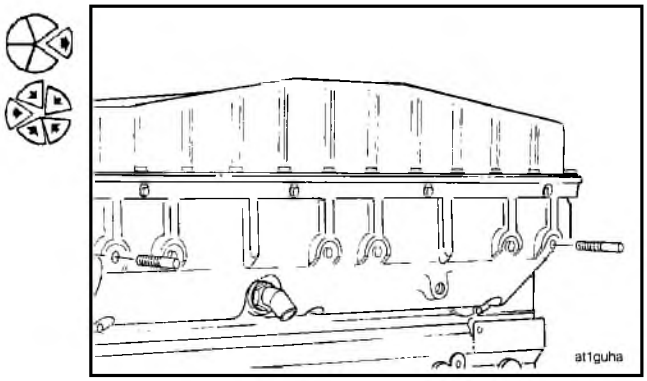

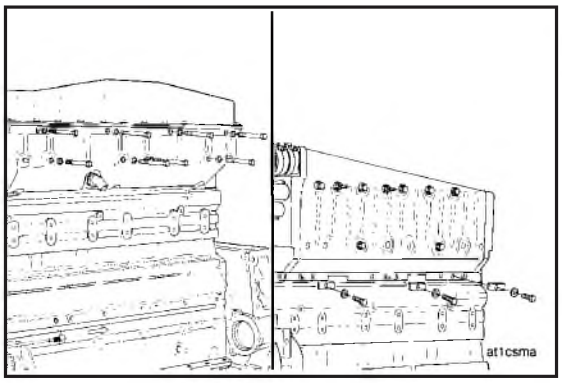

10. Remove the remaining seven mounting capscrews and washers.

NOTE: The Big Cam IV aftercooler assembly has three lower mounting capscrews that use supporting clamps.

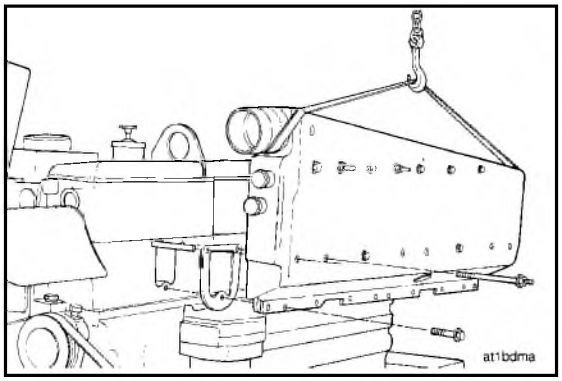

Warning: Because this assembly weighs more than 23 kg [50 lbs], two people or a hoist will be required to lift the aftercooler assembly to avoid personal injury.

11. Remove the aftercooler assembly.
12. Remove the gaskets.

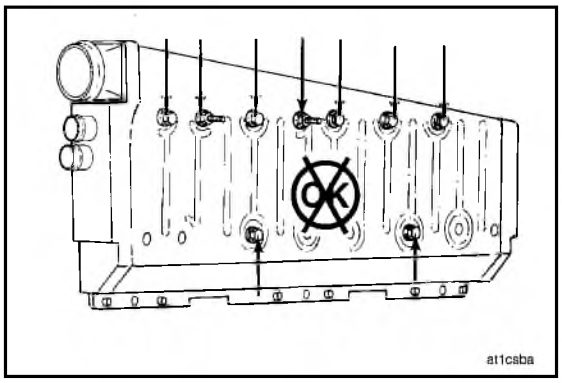

Clean and Inspect

NOTE: Do **not** remove the assembly capscrews or the studs from the Big Cam IV aftercooler assembly. Removal of any of the assembly capscrews can release the clamping load on the aftercooler core. If the capscrews or studs are loosened or removed by mistake, tighten the capscrews or the studs to 40 N•m [30 ft-lbs] torque.

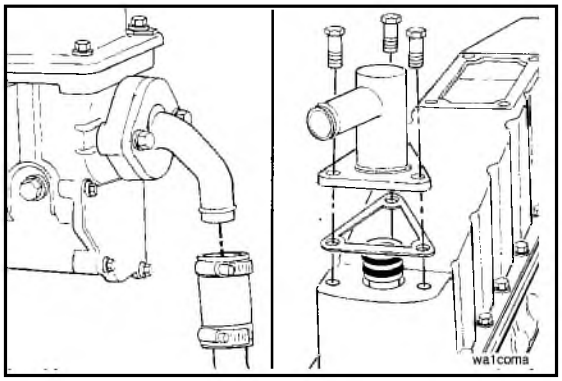

Disassemble (Big Cam III Only)

1. Remove the coolant inlet connection and the gasket.
2. Remove the coolant outlet connection and the gaskets.

3. Remove the 24 capscrews and washers which secure the aftercooler cover to the housing.
4. Remove the cover from the core and the housing.
5. Remove the eight capscrews and washers which secure the housing to the aftercooler core.
6. Remove the core from the housing.
7. Remove the gaskets and the O-rings.

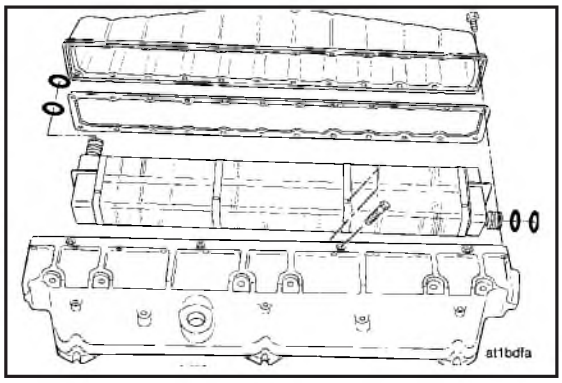

8. Steam clean the parts, and dry with compressed air.

NOTE: Clean the aftercooler core with a solvent or chemical which will **not** harm copper or aluminum.

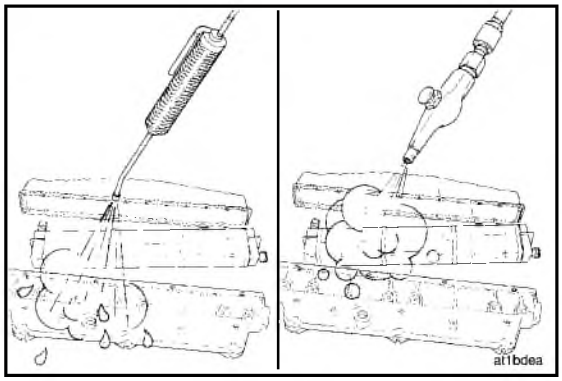

9. Visually inspect the parts for cracks or damage.

NOTE: Pressure test the aftercooler core. Refer to Procedure 3-17.

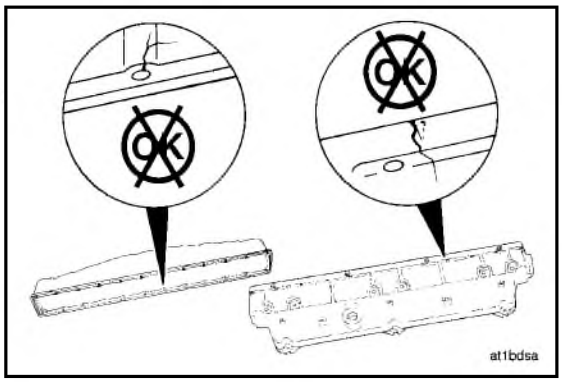

Assemble (Big Cam III Only)

1. Lubricate the four new O-rings with clean lubricating oil.
2. Install the O-rings on the inlet and the outlet fittings of the element.

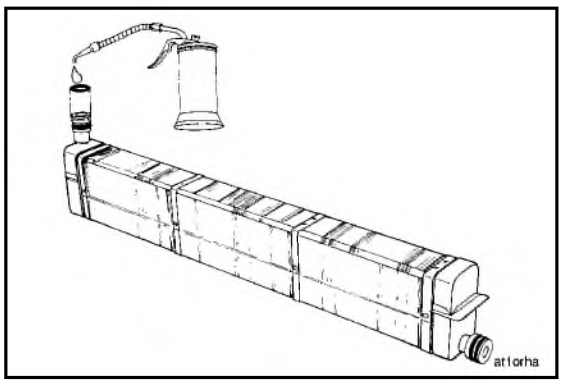

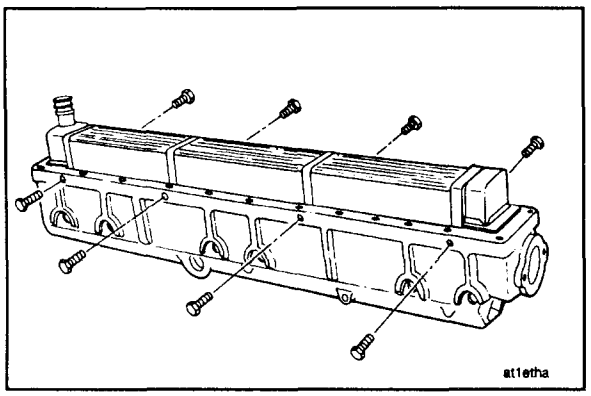

3. Install the aftercooler element in the housing.

NOTE: The element is precision fit in the housing. Carefully install the element to prevent damage to it.

4. Install the eight cross bolts and the hardened washers.

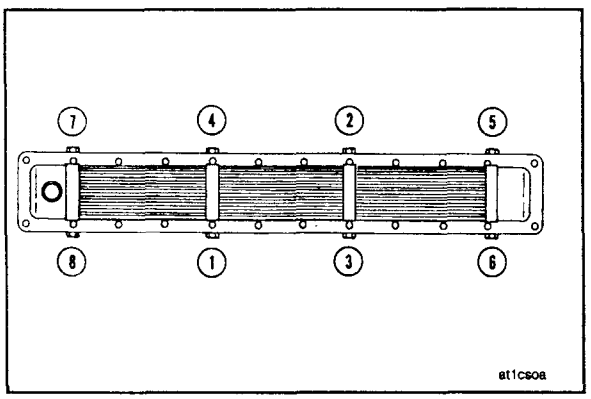

5. Tighten the cross bolts in the sequence shown to the following torque values:
   a. Tighten all capscrews to 20 N•m [15 ft-lbs] torque.
   b. Tighten all capscrews to 35 N•m [25 ft-lbs] torque.

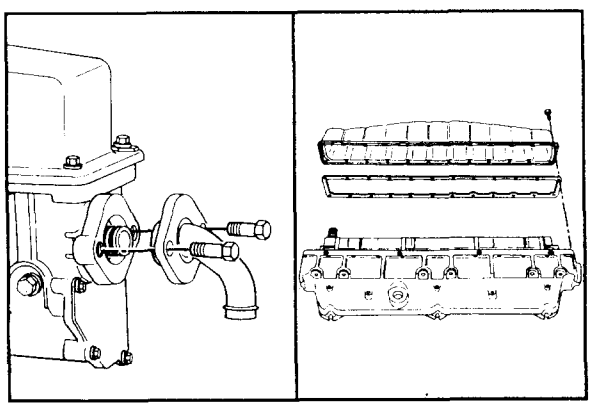

6. Install a new gasket and the water inlet connection on the housing. Use your fingers to tighten the capscrews.
7. Install a new gasket and the aftercooler cover to the housing. Use your fingers to tighten the capscrews.

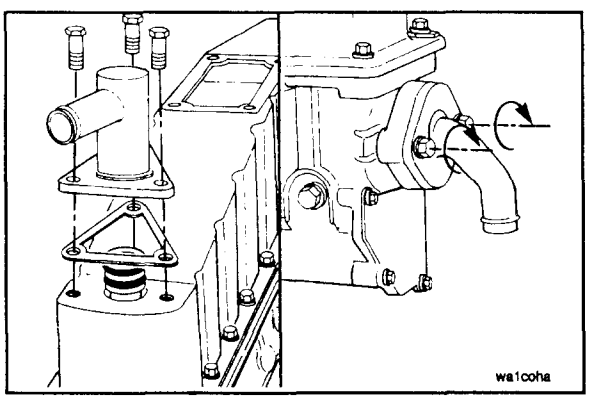

8. Install a new gasket and the water outlet connection. Use your fingers to tighten the capscrews.
9. Tighten the water inlet mounting capscrews to 40 N•m [30 ft-lbs] torque.

10. Follow the sequence shown, and tighten the 24 capscrews which fasten the cover to the housing to 35 N•m [25 ft-lbs] torque.

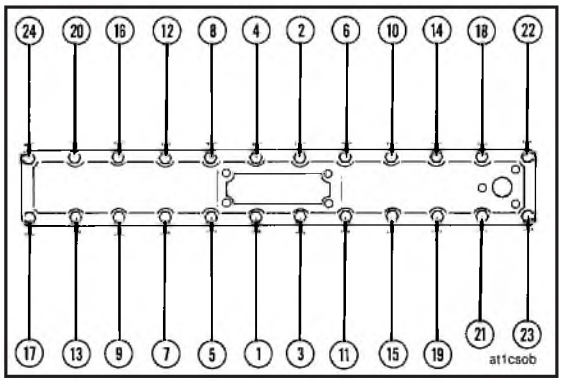

11. Tighten the water outlet mounting capscrews to 30 N•m [20 ft-lbs] torque.

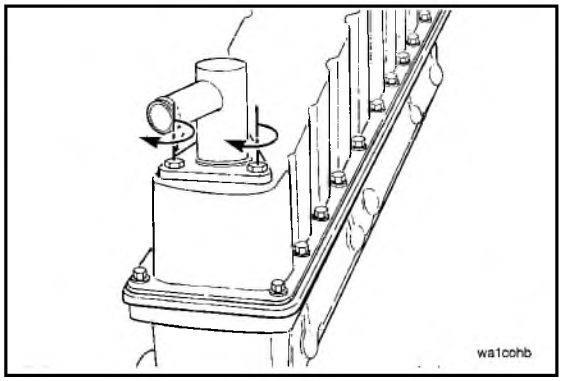

Install

1. Install two guide studs in the cylinder heads.

Warning: Because this assembly weighs more than 23 kg [50 lbs], two people or a hoist will be required to lift the aftercooler assembly to avoid personal injury.

2. Install new gaskets, and install the aftercooler assembly on the guide studs.

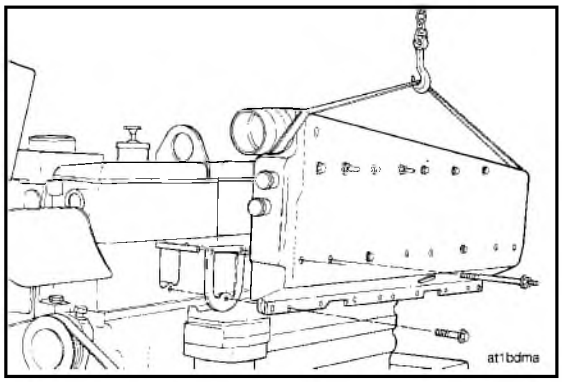

3. Install the seven capscrews and washers.
4. Remove the guide studs, and install the remaining two capscrews and washers.

NOTE: The Big Cam IV engine requires supporting clamps with the lower three capscrews. The clamps **must** be installed with the part number facing away from the aftercooler housing.

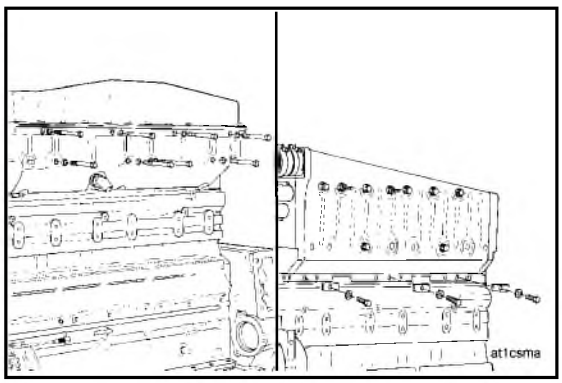

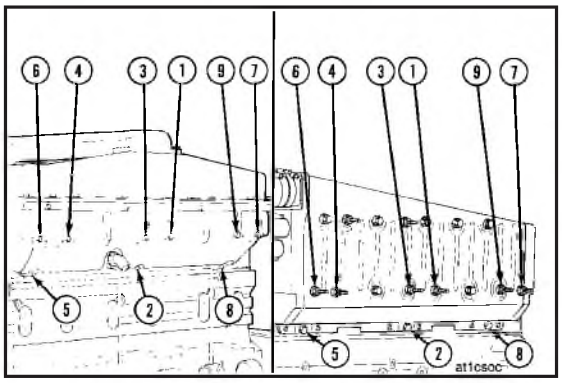

5. Tighten the nine capscrews in the sequence shown to the following torque values:
   a. Big Cam III aftercooler: 35 N•m [25 ft-lbs].
   b. Big Cam IV unitized aftercooler: 70 N•m [50 ft-lbs].

NOTE: Use only grade 8 capscrews to mount the unitized aftercooler.

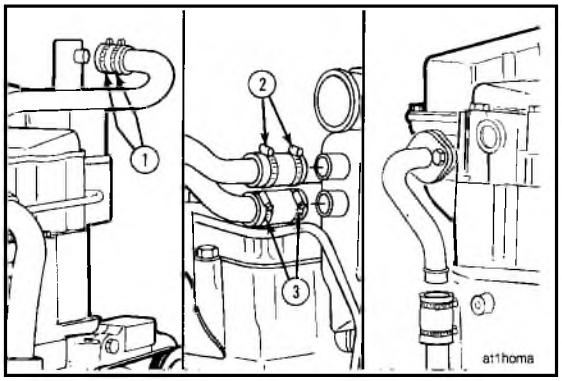

6. Install the hose on the coolant inlet and the outlet connections.
7. Tighten the hose clamps (1), (2), and (3) to 5 N•m [40 in-lbs] torque.

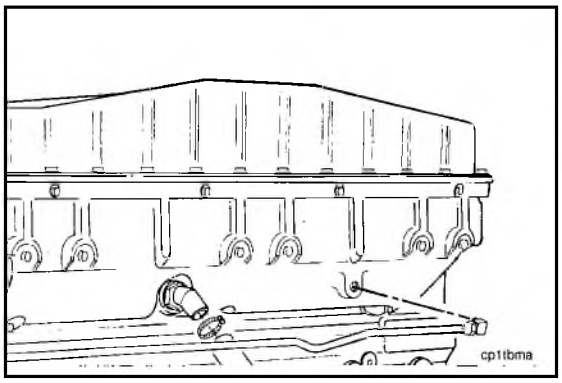

8. Install the air compressor air inlet tube. Refer to Procedure 4-12.
9. Install the AFC signal tube and any other hoses which are attached to the aftercooler housing (turbocharger boost pressure, etc.).

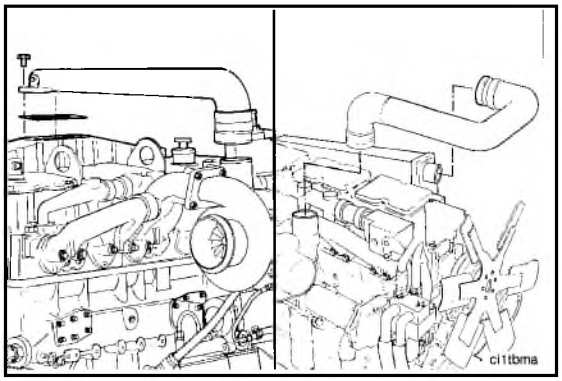

10. Install the air crossover connection or tube. Refer to Procedure 3-13.

11. Fill the cooling system. Start the engine, and check for leaks. Refer to Procedure 1-07.

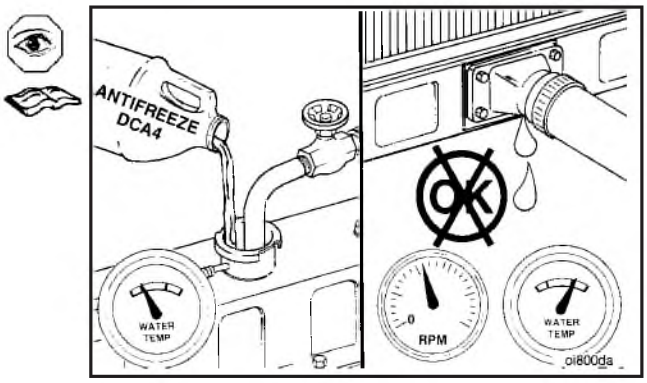

Aftercooler - Pressure Test (3-17)

NOTE: Do **not** remove the assembly capscrews or the studs from the Big Cam IV aftercooler assembly. Removal of any of the assembly capscrews can release the clamping load on the aftercooler core. If the capscrews or the studs are loosened or removed by mistake, tighten the capscrews or the studs to 40 N•m [30 ft-lbs] torque.

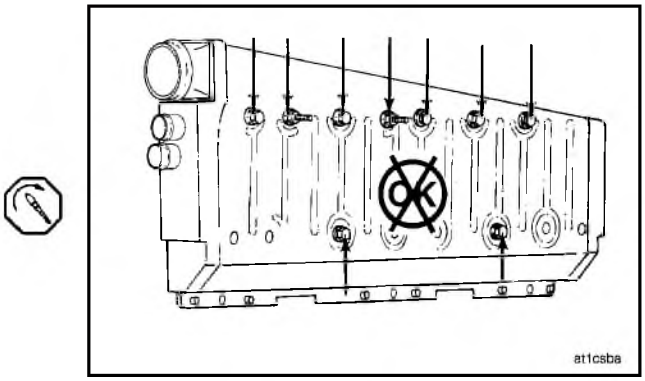

1. Remove the aftercooler assembly. Refer to Procedure 3-16.
2. Disassemble the Big Cam III aftercooler. Refer to Procedure 3-16.

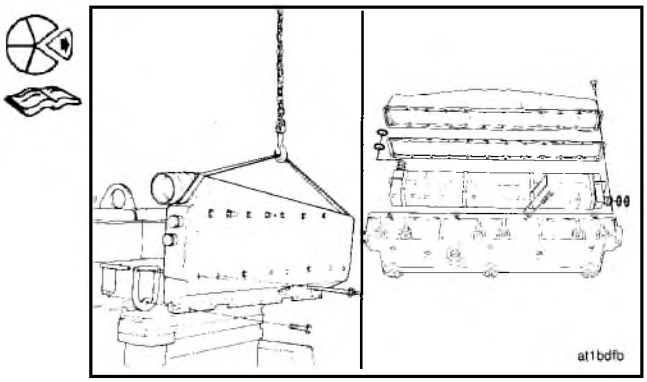

3. Install the hose (1), the hose clamps (2), and the solid pipe plug (3) on the water outlet pipe.
4. Install the hose (4), the hose clamps (5), and the water inlet tube (6) on the water inlet pipe.
5. Install the hose (7), the hose clamps (8), and the air pressure gauge (9).

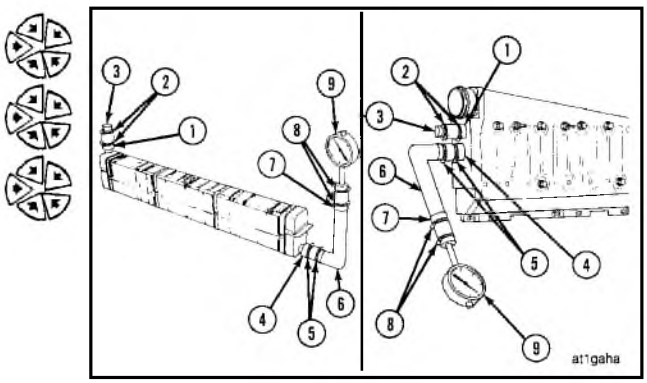

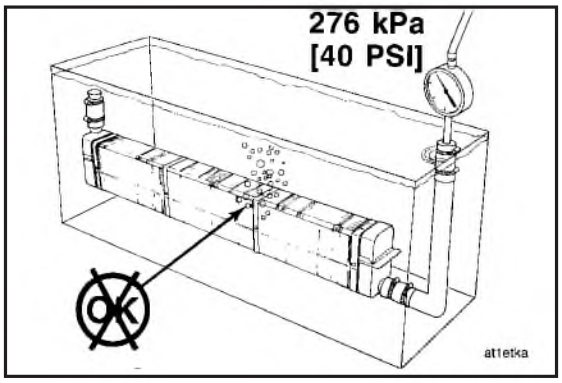

6. Connect the air pressure gauge to a regulated air supply, and apply 276 kPa [40 psi] air pressure.
7. Submerge the core or aftercooler assembly in a tank of water heated to 80°C [180°F].
8. If air bubbles appear, the core is damaged. Replace the core or aftercooler assembly.

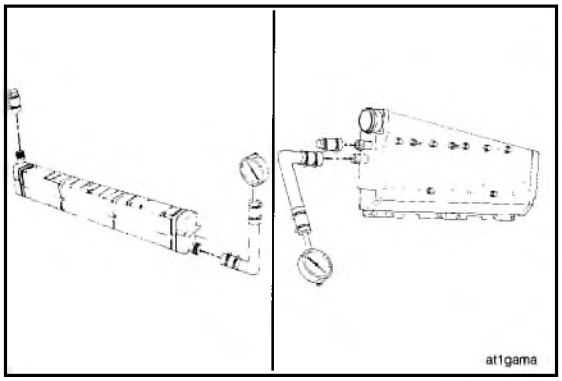

9. Remove the core or aftercooler assembly from the water tank.
10. Remove the test equipment.

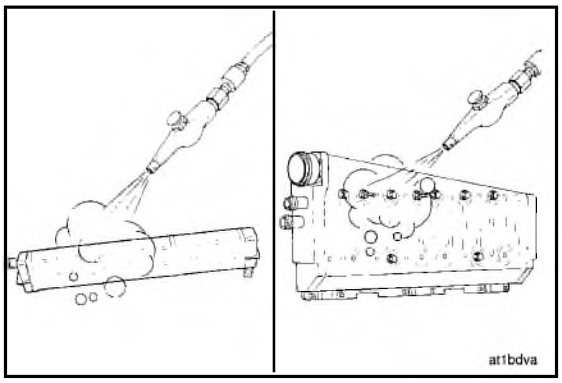

11. Dry with compressed air.

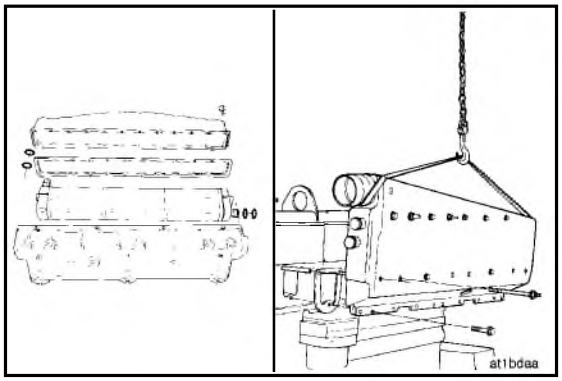

12. Assemble the Big Cam III aftercooler. Refer to Procedure 3-16.
13. Install the aftercooler assembly. Refer to Procedure 3-16.

Section 4 - Compressed Air System

Section Contents

	Reference No.	Page No.
General Information	4-01	2
Specifications	4-02	3
Flow Diagrams	4-03	5
Service Tools	4-04	6

System Troubleshooting and Repair List

	Procedure No.	Page No.
Air Compressor - Replace	4-12	21
Air Compressor, Cylinder Head - Replace	4-11	18
Air Governor - Check	4-08	13
Air Governor and Compressor Unloader Valve - Check	4-07	11
Carbon Buildup, Air Compressor - Check	4-05	6
Gasket Leaks, Air Compressor - Check	4-06	10
Lubricating Oil Usage, Air Compressor - Check	4-09	15
Unloader Valve - Check	4-10	16

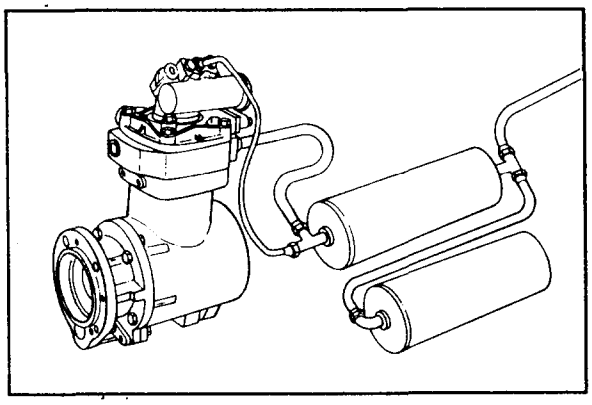

General Information - (4-01)

The compressed air system normally consists of a gear driven air compressor, an air governor, air tanks and all necessary plumbing.

The Cummins single and two cylinder air compressors are engine driven piston type compressors which supply compressed air to operate air activated devices. The compressor "runs" continuously but has a "loaded" and "unloaded" operating mode. The operating mode is controlled by a pressure activated governor and the compressor unloading assembly. When the air system reaches a predetermined pressure, the governor applies an air signal to the air compressor unloader assembly causing the unloader valve to hold the compressor intake valve open and compressed air stops flowing into the air system. As the air in the air system is used, the pressure drops. At a predetermined pressure the governor exhausts the air signal to the compressor unloader assembly allowing the compressor to again pump compressed air into the air system.

Compressed Air System Specifications - (4-02)

Single Cylinder Air Compressor

Cylinders 1
Compressor Capacity @ 1250 RPM ..... 6.2 L per sec. [13.20 CFM]
Piston Displacement ..... 296 C.C. [18.6 C.I.]
Bore ..... 92.08 mm [3.625 in.]
Stroke ..... 44.45 mm [1.750 in.]
Speed ..... Engine Speed
Cooling ..... Engine Coolant
Lubrication ..... Engine Lubricating Oil
Plumbing Line Sizes
- Coolant Inlet and Outlet (Pipe Fitting) ..... 9.53 mm NPTF [0.375 in. NPTF]
- Air Inlet (Inside Diameter) ..... 22.22 mm [0.875 in.]
- Air Outlet (Minimum Inside Diameter) ..... 12.7 mm [0.50 in.]

Height, Overall (Approximate) ..... 31.1 cm [12.25 in.]
Width, Overall (Approximate) ..... 14.6 cm [5.75 in.]
Length, Overall (Approximate) ..... 22.9 cm [9.00 in.]
Weight (Approximate) ..... 18 Kg [40.0 lbs]

Two Cylinder Air Compressor

Cylinders 2
Compressor Capacity @ 1250 RPM ..... 14.2 L per sec. [30.00 CFM]
Piston Displacement ..... 676 c.c. [41.3 C.I.]
Bore ..... 92.08 mm [3.625 in.]
Stroke ..... 50.8 mm [2.00 in.]
Speed ..... Engine Speed
Cooling ..... Engine Coolant
Lubrication ..... Engine Lubricating Oil
Plumbing Line Sizes
- Coolant Inlet and Outlet (Pipe Fitting) ..... 9.53 mm NPTF [0.375 in. NPTF]
- Air Inlet (Inside Diameter) ..... 22.22 mm [0.875 in.]
- Air Outlet (Minimum Inside Diameter) ..... 15.88 mm [0.625 in.]

Two Cylinder Air Compressor Specifications (Continued)

Height, Overall (Approximate) ..... 34.3 cm [13.50 in.]

Width, Overall (Approximate) ..... 17.8 cm [7.00 in.]

Length, Overall (Approximate) ..... 28.7 cm [11.30 in.]

Weight (Approximate) ..... 33.5 kg [74.50 lb.]

NOTE: In applications where duty cycles average 10 percent or more, (refuse trucks, pickup and delivery trucks, transit buses and equipment with high accessory air usage) or air pressures are above 862 kPa [125 psi], use a discharge line with a minimum inside diameter of 19.05 MM [0.750 in.] to prevent carbon buildup.

Compressor Spring Force Specifications

Spring Part Number	Spring Use	Approx. Free Length mm (inch)	Number of Coils	Wire Diameter mm [inch]	Measurement Length mm [inch]	Force Required to Compress Minimum N [lb.]	Force Required to Compress Maximum N [lb.]
128080	Exhaust Valve	17.02 [0.670]	3.0	2.03 [0.080]	7.11 [0.280]	35.6 3.63 [8.00]	46.3 4.72 [10.40]
190334	Intake Valve	12.70 [0.500]	2.8	1.58 [0.062]	7.11 [0.280]	3.45 0.25 [0.55]	4.89 0.50 [1.10]
150631	Unloading Valve (naturally aspirated)	41.91 [1.650]	11.5	2.03 [0.080]	24.89 [0.980]	133.4 13.6 [30.00]	169.0 17.23[38.00]
217557	Unloading Valve (turbocharged up to 1270 mm Hg [50 in Hg])	41.91 [1.650]	12.0	1.83 [0.072]	24.89 [0.980]	75.6 7.72 [17.00]	97.9 9.98 [22.00]
3003101	Unloading Valve (all turbocharged engines)	41.91 [1.650]	10.8	2.89 [0.065]	24.89 [0.980]	53.4 5.4 [12.00]	75.6 7.72 [17.00]

Compressed Air System Flow Diagrams - (4-03)

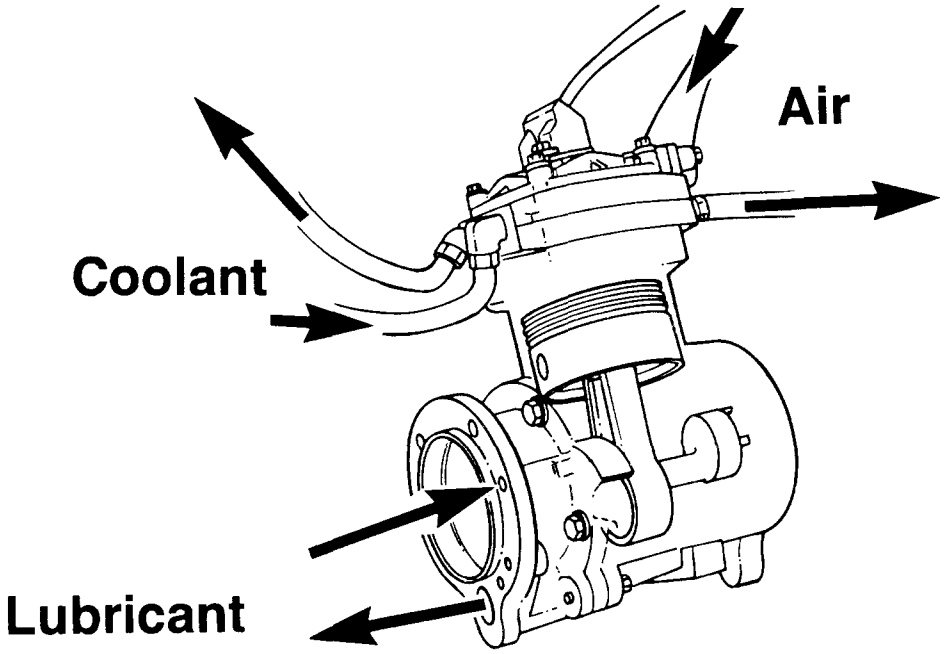

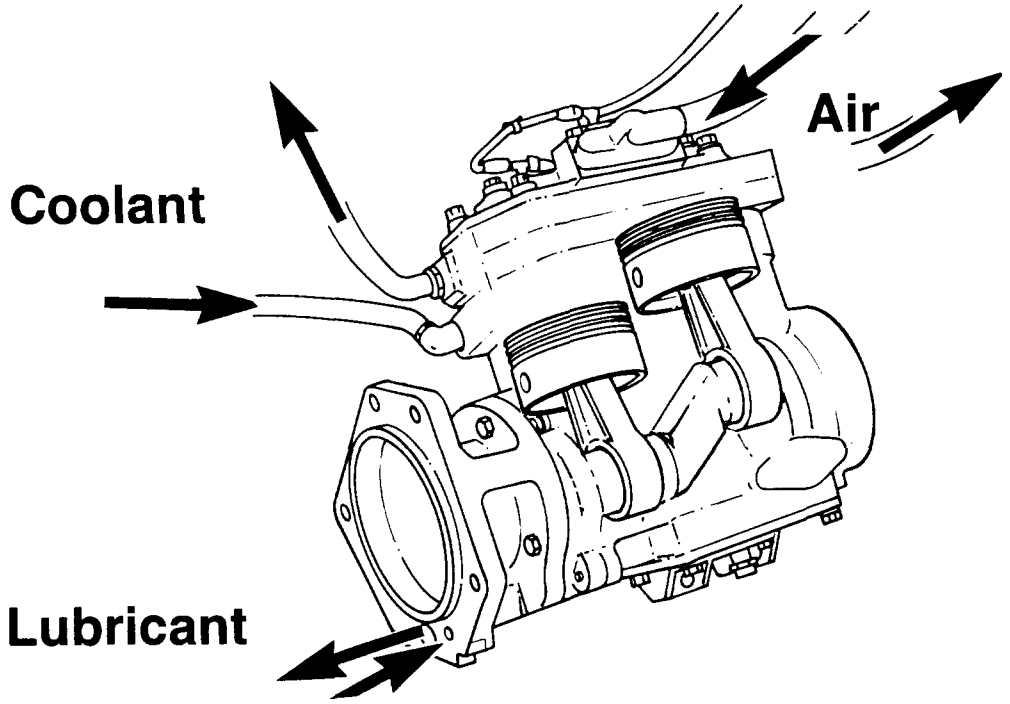

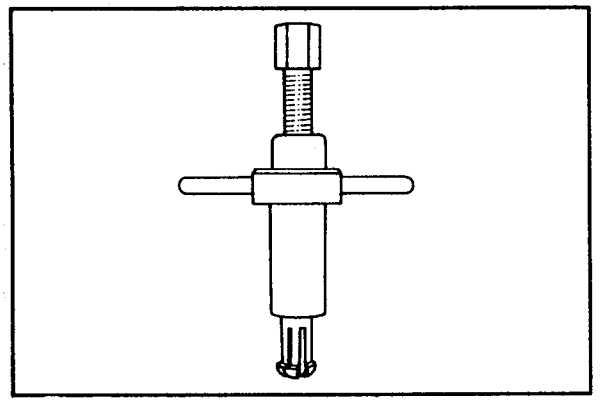

Service Tools - (4-04)

Part No. ST-544 Valve Seat Puller.

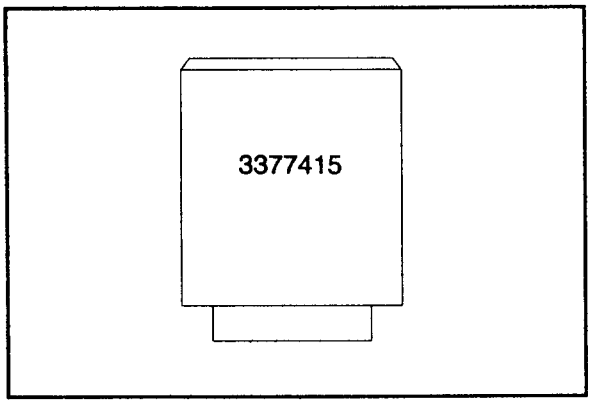

Part No. 3377415 Air Compressor Seat Installation Tool.

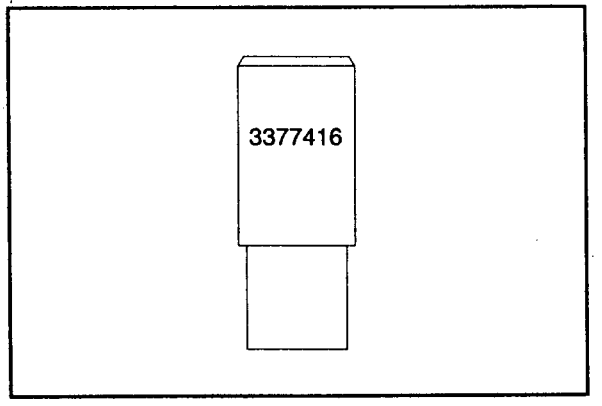

Part No. 3377416 Air Compressor Seat Removal Tool.

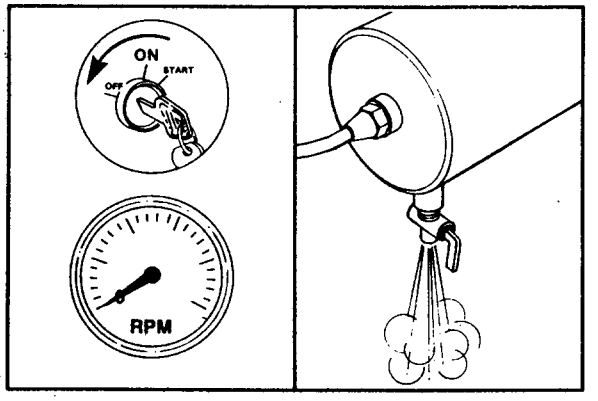

Carbon Buildup, Air Compressor - Check (4-05)

NOTE: The illustrations shown will be of the single cylinder air compressor. Differences in procedures for one and two cylinder Cummins air compressors will be shown where necessary.

1. Shut off the engine.
2. Open the draincock on the "wet tank" to release air pressure from the system.

3. Remove the air discharge line from the air compressor and the first "wet tank."

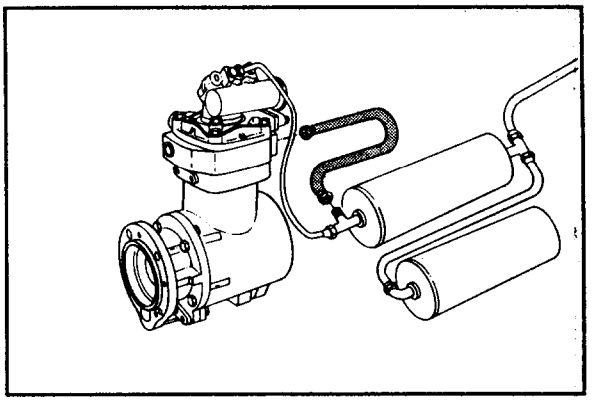

4. Measure the total carbon deposit thickness inside the air discharge line as shown.

NOTE: The carbon deposit thickness **must not** exceed 1.6 mm [1/16 inch].

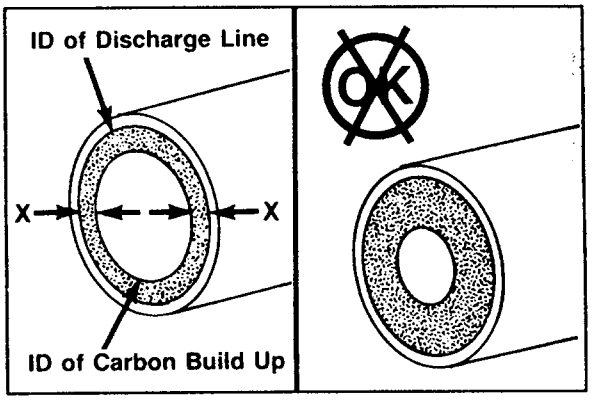

NOTE: If the total carbon deposit thickness exceeds specification:

a. Clean or replace. Refer to the manufacturer's material specifications.

Warning: The air discharge line must be capable of withstanding extreme heat and pressure to prevent personal injury and property damage. Refer to the manufacturer's specifications.

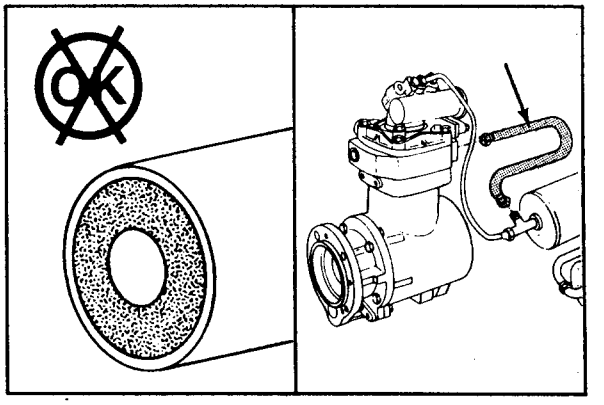

b. Continue to check for carbon buildup in the air discharge line connections up to the first or "wet" tank.

c. Clean or replace any fittings with carbon deposits greater than 1.6 mm [0.06 (1/16) inch]. Refer to the manufacturer's specifications for cleaning or replacement instructions.

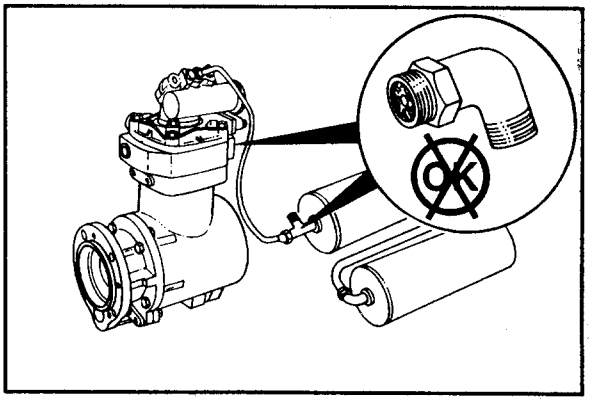

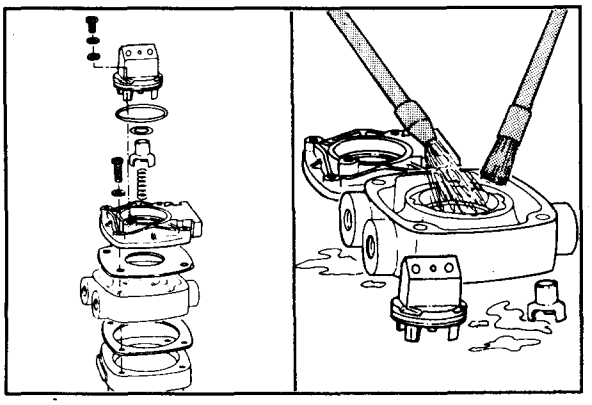

d. Remove the air compressor head and valve assembly. Refer to Procedure 4-11.

e. Clean the compressor head and valve assembly components with solvent and a nonmetallic brush to remove carbon.

Caution: Do not use a sharp object to remove carbon. The sealing surfaces may be damaged.

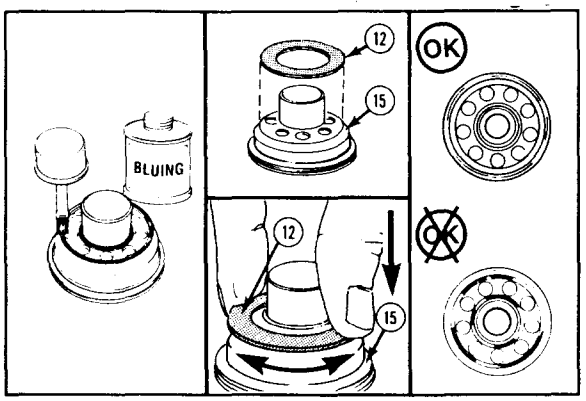

f. Inspect the valve assembly components.

1) Apply a "bluing" compound to the exhaust valve seating surface.

2) Install the exhaust valve and check the seating area. Replace the seat if the contact area is **not** 100 percent.

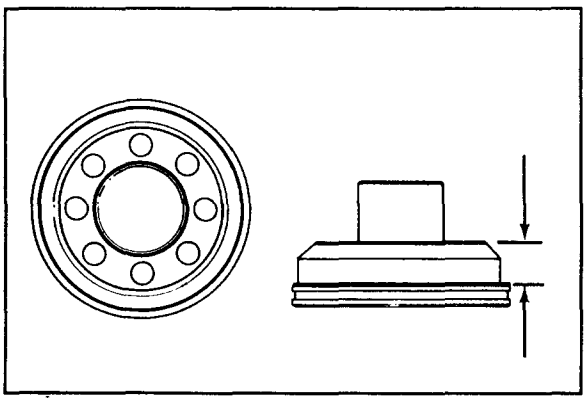

3) Measure the exhaust valve seat height.

4) If the seat height is less than 12.32 mm [0.485 inch], replace the seat.

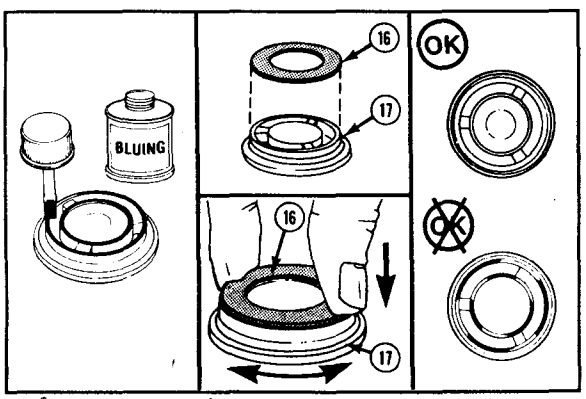

5) Apply a "bluing" compound to the intake valve seating surfaces.

6) Install the intake valve and check the seating area. Replace the seat if the contact area is **not** 100 percent.

7) Measure the intake valve seat height.

8) If the seat height is less than 6.86 mm [0.270 inch], replace the seat.

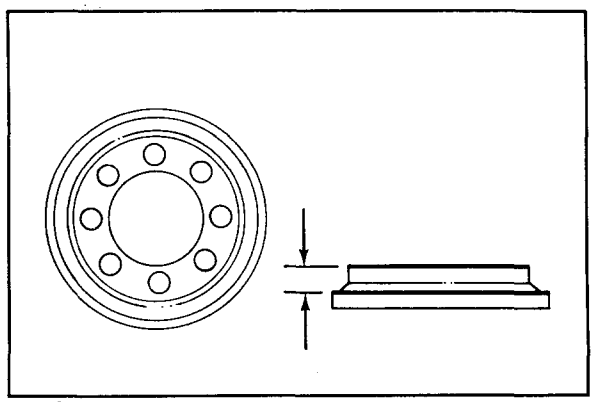

g. Use a valve spring tester to check the intake, exhaust and unloader valve springs. Replace any springs that do **not** meet specifications.

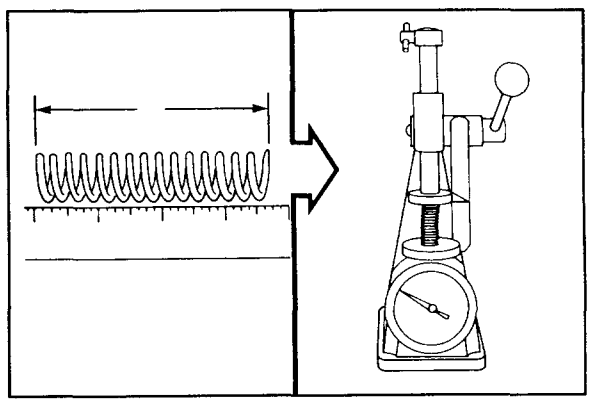

Standard air compressor spring specifications are shown. Also refer to Procedure 4-02.

NOTE: For two cylinder compressors and naturally aspirated single cylinder compressors, refer to Procedure 4-07 for additional unloader spring data. Chart is also shown on page 4.

COMPRESSOR SPRING FORCE SPECIFICATIONS

Spring Part Number	Spring Use	Approx. Free Length mm [inch]	Number of Coils	Wire Diameter mm [inch]	Force Required to Compress: Length mm [inch]	Minimum N [lb.]	Maximum N [lb]
128080	Exhaust Valve	17.02 [0.670]	3.0	2.03 [0.080]	7.11 [0.280]	35.6 [8.00]	46.3 [10.40]
190334	Intake Valve	12.70 [0.500]	2.8	1.58 [0.062]	7.11 [0.280]	3.45 [0.55]	4.89 [1.10]
150631	Unloading Valve (naturally aspirated)	41.91 [1.650]	11.5	2.03 [0.080]	24.89 [0.980]	133.4 [30.00]	169.0 [38.00]
217557	Unloading Valve (turbocharged up to 1270 mm HG [50 in. Hg])	41.91 [1.650]	12.0	1.83 [0.072]	24.89 [0.980]	75.6 [17.00]	97.9 [22.00]
3003101	Unloading Valve (all turbocharged engines)	41.91 [1.650]	10.8	2.89 [0.065]	24.89 [0.980]	53.4 [12.00]	75.6 [17.00]

h. Visually inspect the intake and the exhaust valves for cracks or damage.

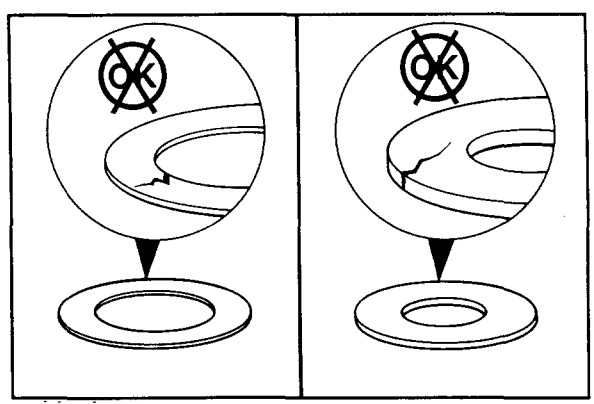

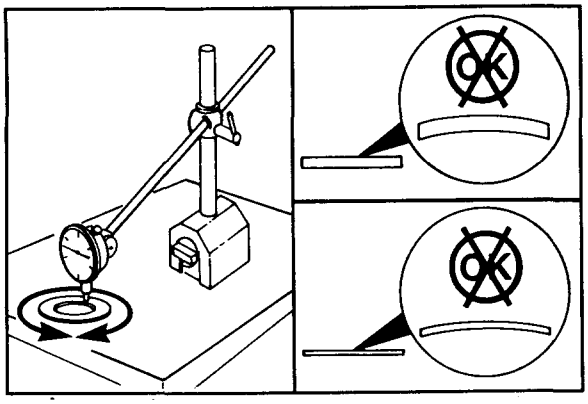

i. Measure the flatness of the intake and exhaust valves. Both valves **must** be flat within 0.03 mm [0.001 inch].

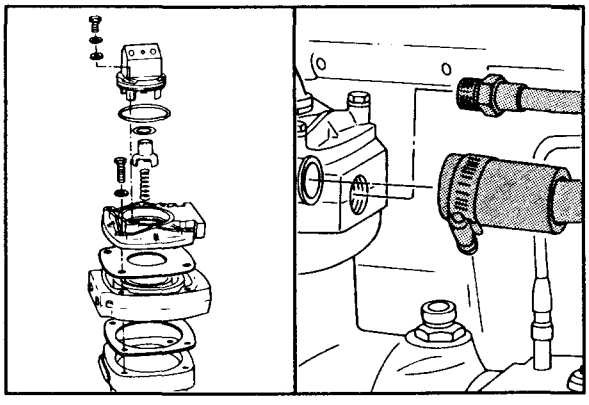

5. Assemble the air compressor using new gaskets and O-rings. Refer to Procedure 4-11.
6. Install and tighten the air inlet and outlet connections.

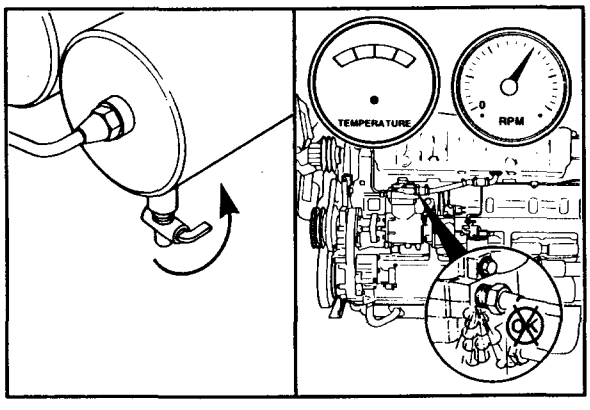

7. Close the "wet tank" draincock.
8. Operate the engine and check for air leaks.

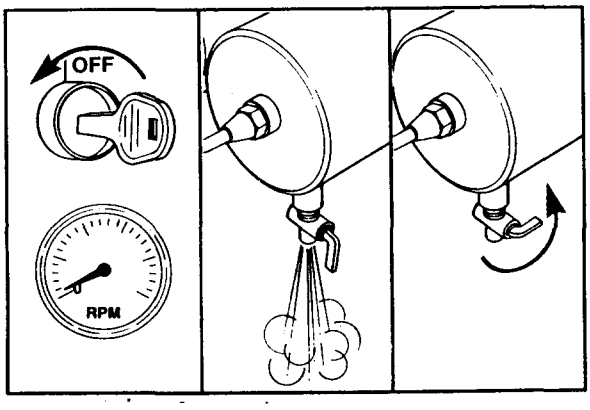

Gasket Leaks, Air Compressor - Check (4-06)

NOTE: The illustrations shown will be of the single cylinder air compressor. Differences in procedures for one and two cylinder Cummins air compressors will be shown where necessary.

1. Shut off the engine.
2. Open the draincock on the "wet tank" to release air pressure from the system; then close after pressure is released.

3. Operate the engine to activate the air compressor.
4. With the air compressor pumping between 550 to 690 kPa [80 to 100 psi], use a solution of soapy water to check for air leaks in the following areas:
   a. Air Compressor cover gasket.
   b. Unloader body O-ring.
   c. Air Compressor head gasket.
5. If air leaks are found, replace the leaking gasket or O-ring. Refer to Procedure 4-11.

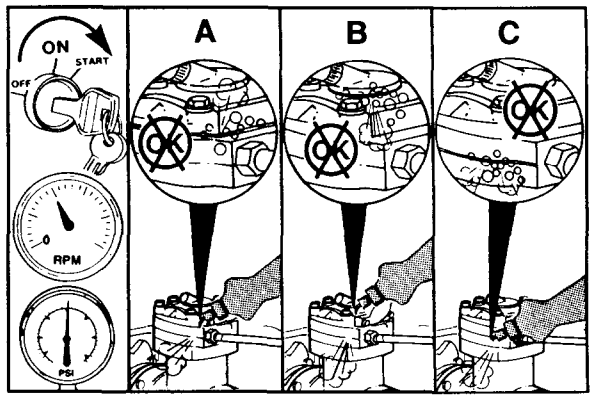

Air Governor and Compressor Unloader Valve - Check (4-07)

Air Compressor Will Not Pump

NOTE: The illustrations shown will be of the single cylinder air compressor. Differences in procedures for one and two cylinder Cummins air compressors will be shown where necessary.

1. Remove the air governor or air governor line from the air compressor unloader body.

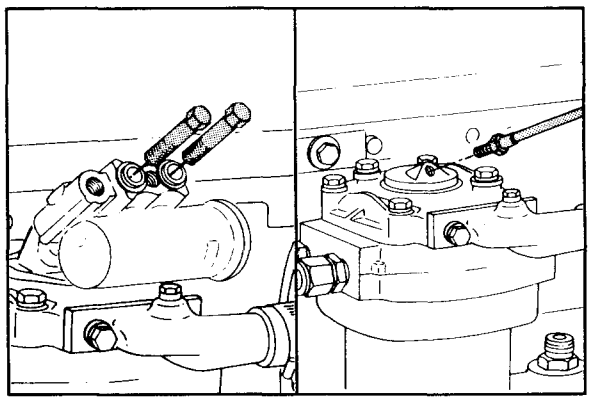

2. Operate the engine to activate the air compressor.
3. If the air compressor is pumping, the air governor is malfunctioning and **must** be repaired or replaced. Refer to the manufacturer's instructions.

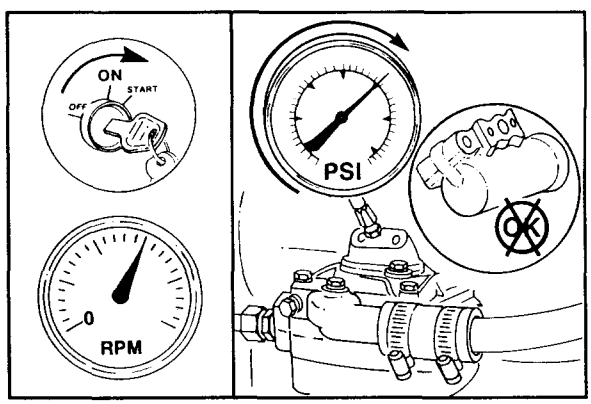

4. If the air compressor does **not** pump, remove, clean, and inspect the air compressor valve assembly. Refer to Procedure 4-10.

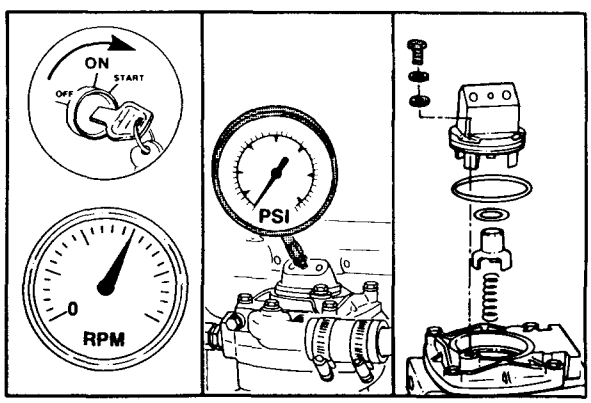

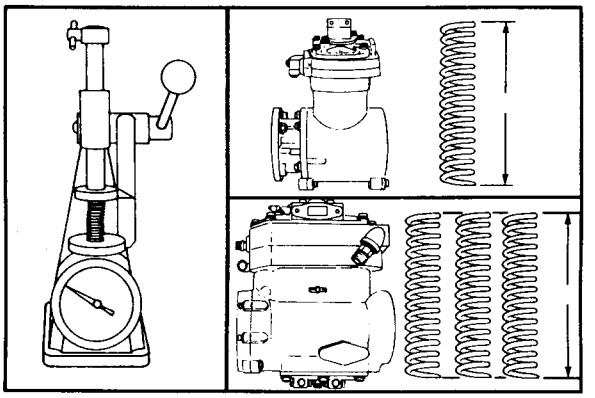

5. Use a valve spring tester to check the unloader spring.

NOTE: For Cummins two cylinder air compressors, check both cylinder and the center unloader springs.

COMPRESSOR SPRING FORCE SPECIFICATIONS

Spring Part Number	Spring Use	Approx. Free Length mm [inch]	Number of Coils	Wire Diameter mm [inch]	Force Required to Compress: Length mm [inch]	Minimum N [lb.]	Maximum N [lb]
128080	Exhaust Valve	17.02 [0.670]	3.0	2.03 [0.080]	7.11 [0.280]	35.6 [8.00]	46.3 [10.40]
190334	Intake Valve	12.70 [0.500]	2.8	1.58 [0.062]	7.11 [0.280]	3.45 [0.55]	4.89 [1.10]
150631	Unloading Valve (naturally aspirated)	41.91 [1.650]	11.5	2.03 [0.080]	24.89 [0.980]	133.4 [30.00]	169.0 [38.00]
217557	Unloading Valve (turbocharged up to 1270 mm HG [50 in. Hg])	41.91 [1.650]	12.0	1.83 [0.072]	24.89 [0.980]	75.6 [17.00]	97.9 [22.00]
3003101	Unloading Valve (all turbocharged engines)	41.91 [1.650]	10.8	2.89 [0.065]	24.89 [0.980]	53.4 [12.00]	75.6 [17.00]

6. Refer to the accompanying table for unloader spring specifications. Also refer to Reference 4-02.
7. Replace the unloader spring if it does **not** meet the specifications shown or the wrong spring has been used.

NOTE: Chart is also shown on page 4.

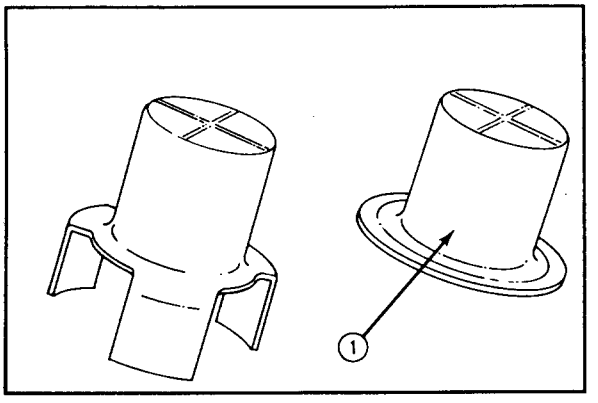

NOTE: If the compressor has a "flat hat" unloader valve (1), it **must** use Part No. 150631 Unloader Spring.

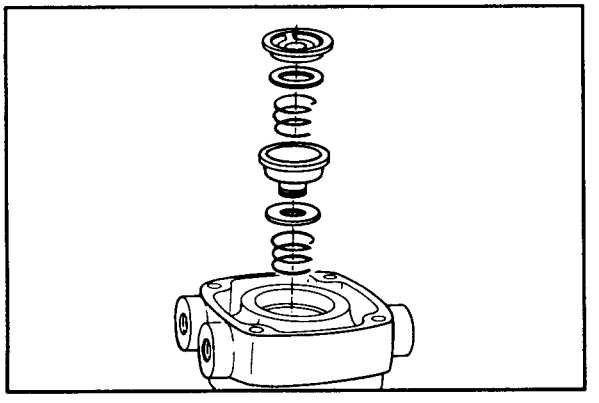

8. Remove, clean and inspect the air compressor intake and exhaust valve assemblies including the seats, valves and springs. Refer to Procedure 4-05.

9. Assemble the air compressor. Refer to Procedure 4-11.
10. Operate the engine and check air compressor operation with the air governor removed.

NOTE: Air pressure will increase if the air compressor is pumping.

NOTE: Do **not** exceed maximum vehicle air system pressure or 1035 kPa [150 psi] whichever is lower. Refer to the manufacturer's specification.

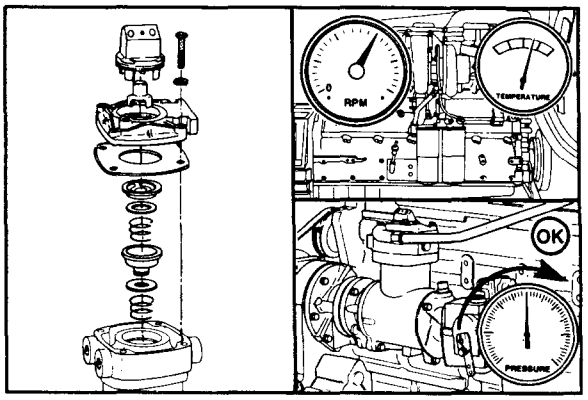

11. Install the air governor or air governor line to the unloader body and tighten.

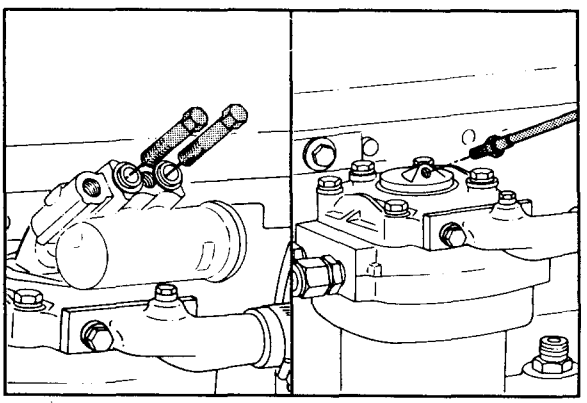

Air Governor - Check (4-08)

Air Compressor Pumps Continuously

NOTE: The illustrations shown will be of the single cylinder air compressor. Differences in procedures for one and two cylinder Cummins air compressors will be shown where necessary.

1. Remove the accessory air lines from the air governor unloader port.

NOTE: Do **not** disconnect the line from the air compressor unloader valve.

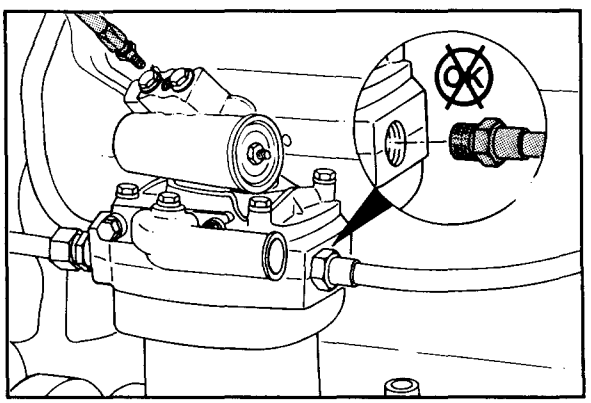

2. Install pipe plugs in the air governor unloader ports where accessory air lines were removed.
3. Operate the engine to activate the air compressor.
4. If the air compressor stops pumping (air pressure stops rising) at the governed air pressure, there is a leak in an accessory or an accessory air line. Refer to the equipment manufacturer's instructions for troubleshooting and repair.

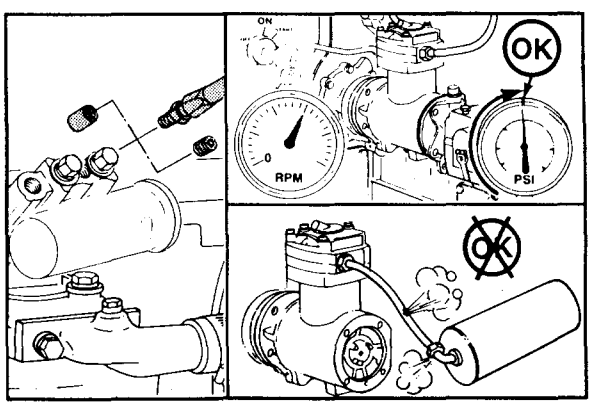

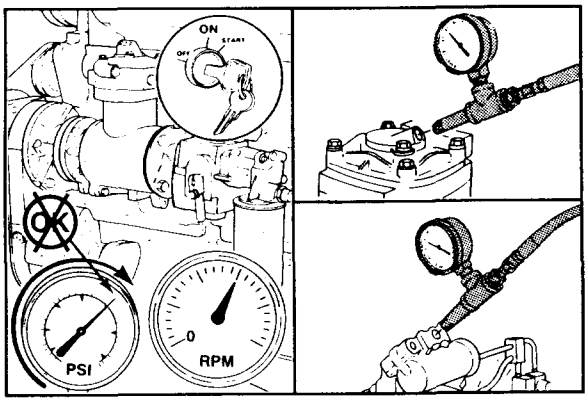

5. If the air compressor does **not** stop pumping (air pressure continues to rise) at the governed air pressure, connect a regulated shop air pressure line to one of the following:
   a. The air compressor unloader valve port.
   b. One of the air governor unloader valve ports.

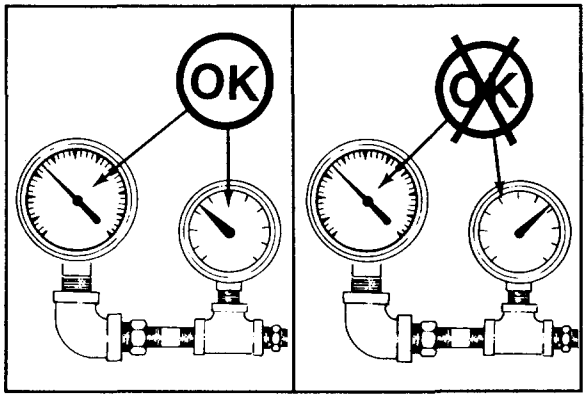

NOTE: Be sure the air pressure gauge is accurate and the supply lines and fittings are in good condition before performing any air pressure checks.

Use a master gauge of known accuracy to check the air pressure gauge.

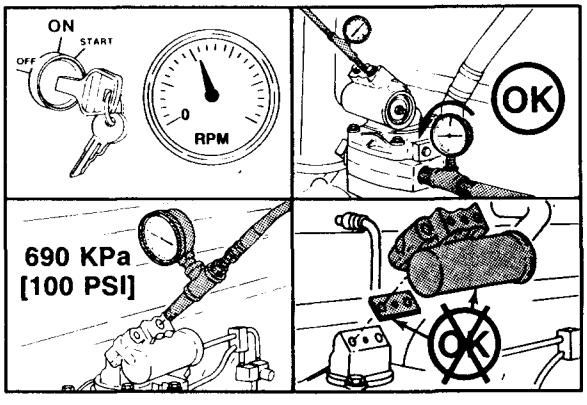

6. Apply 690 kPa [100 psi] air pressure to the unloader port.
7. If the air compressor stops pumping (air pressure stops rising), the air governor is malfunctioning and **must** be repaired or replaced or the air governor mounting gasket is leaking. Refer to the manufacturer's instructions.

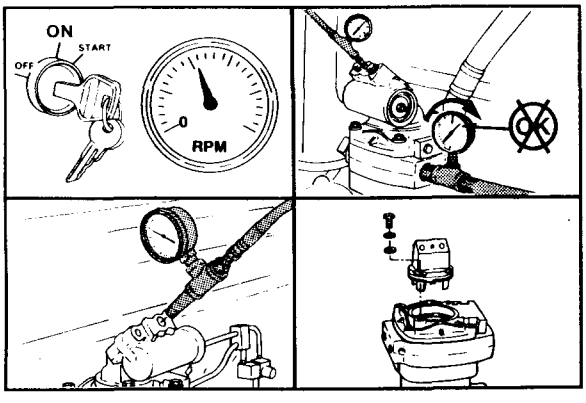

8. If the air compressor continues to pump (air pressure continues to rise), the unloader valve is malfunctioning and **must** be repaired or replaced. Refer to Procedure 4-10.

9. Remove the pipe plugs from the unloader ports used for accessory air lines.
10. Install and tighten the accessory air lines.
11. Connect the unloader valve.

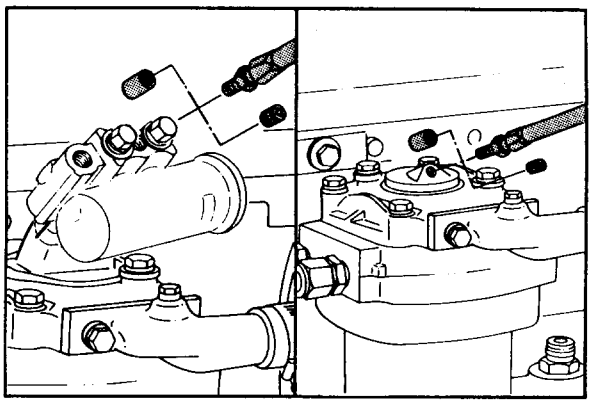

12. Operate the engine and check for air leaks.

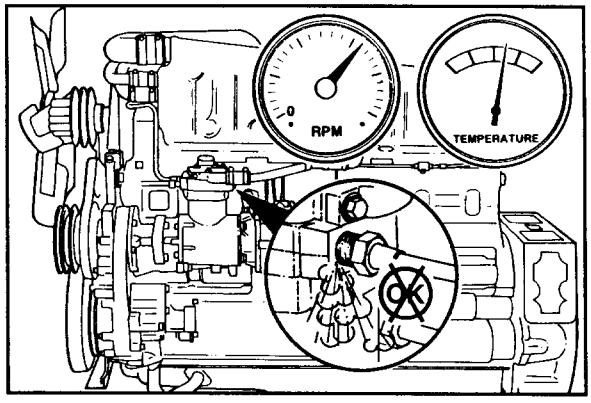

Lubricating Oil Usage, Air Compressor - Check (4-09)

NOTE: Be sure the air pressure gauge is accurate and the supply lines and fittings are in good condition before performing any air pressure checks. Use a master gauge of known accuracy to check the air pressure gauge.

NOTE: The illustrations shown will be of the single cylinder air compressor. Differences in procedures for one and two cylinder Cummins air compressors will be shown where necessary.

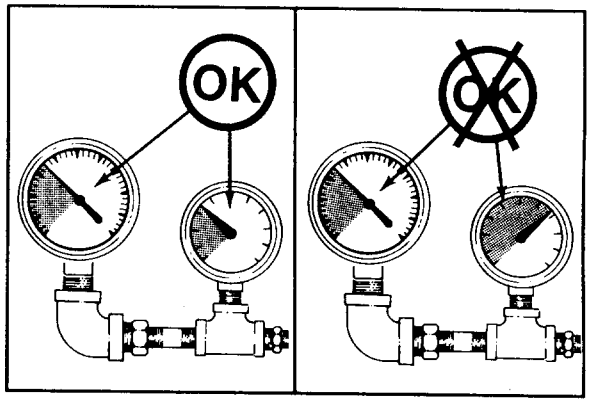

1. Remove the air discharge line from the air compressor.
2. Use a 690 kPa [100 psi] regulated shop air line to apply air pressure to the air governor unloader port.

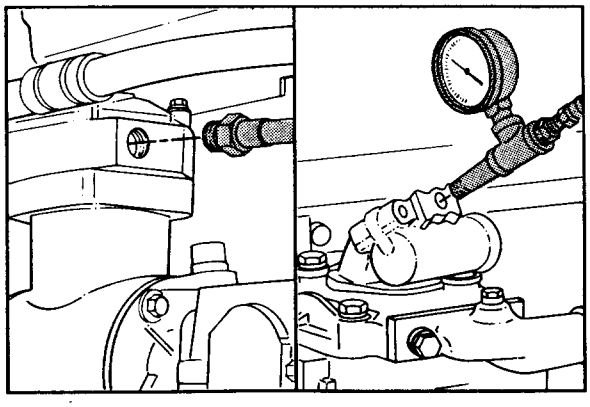

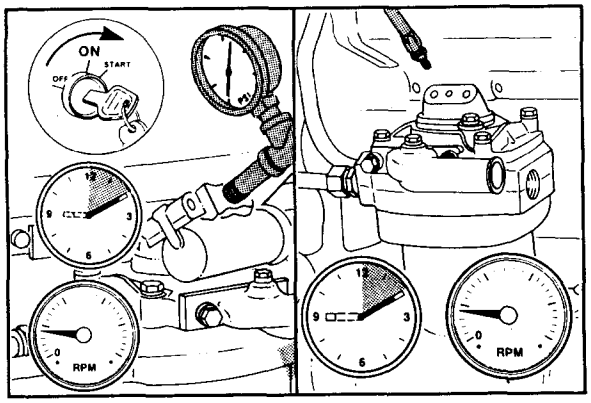

3. Operate the engine at low idle for 10 minutes with the air compressor unloaded (shop air applied to the unloader port).
4. Remove the shop air pressure from the unloader port.
5. Operate the engine at low idle for 10 minutes with a white cloth over the air compressor discharge port.

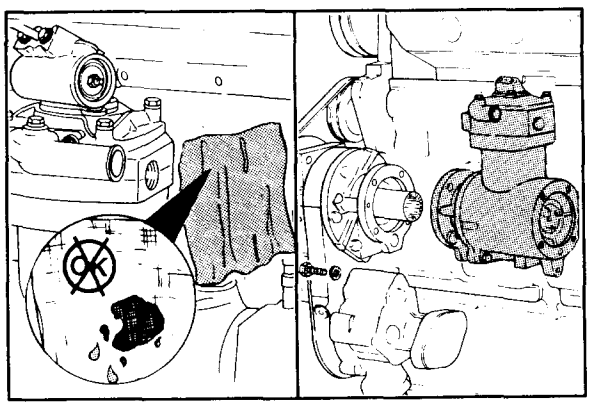

6. Remove the white cloth and inspect it for oil contamination.
7. If the cloth indicates more than a trace of grey, the air compressor is using an excessive amount of oil and **must** be replaced. Refer to Procedure 4-12.

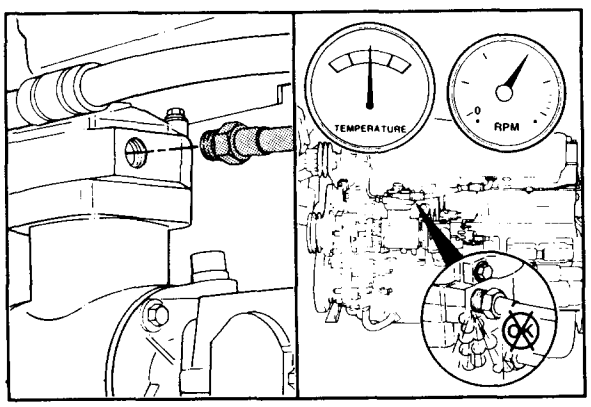

8. Install and tighten the air discharge line.
9. Operate the engine and check for air leaks.

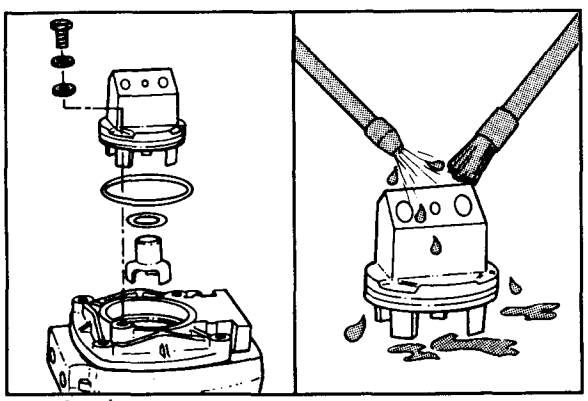

Unloader Valve - Check (4-10)

NOTE: The illustrations shown will be of the single cylinder air compressor. Differences in procedures for one and two cylinder Cummins air compressors will be shown where necessary.

1. Remove the air compressor unloader assembly. Refer to Procedure 4-11.
2. Remove all carbon and varnish from the unloader valve and body. Refer to Procedure 4-05.

3. Visually inspect the unloader valve for deep scratches or cracks.

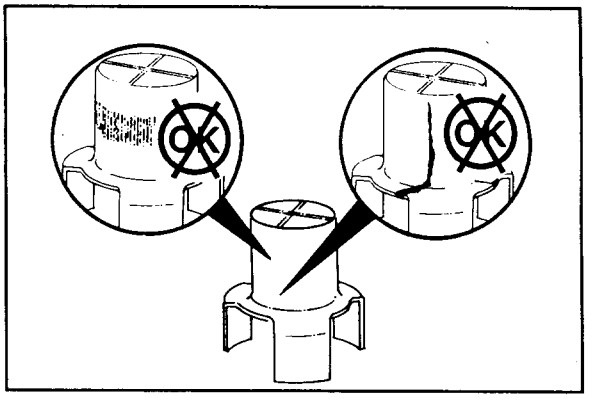

4. Visually inspect the rectangular seal for damage or incorrect installation.

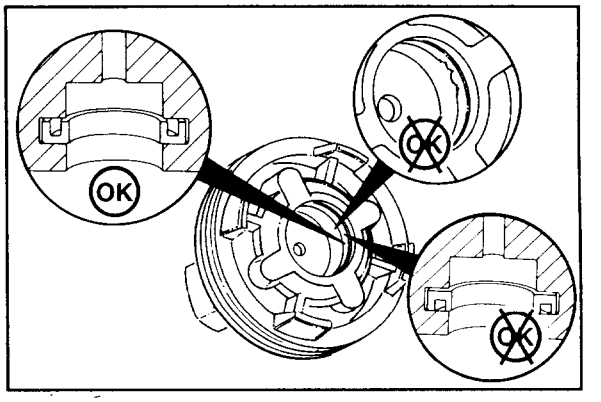

5. Visually inspect the unloader body O-ring for damage.

NOTE: Replace the O-ring if it is damaged. Determine the cause for the damage and repair the problem.

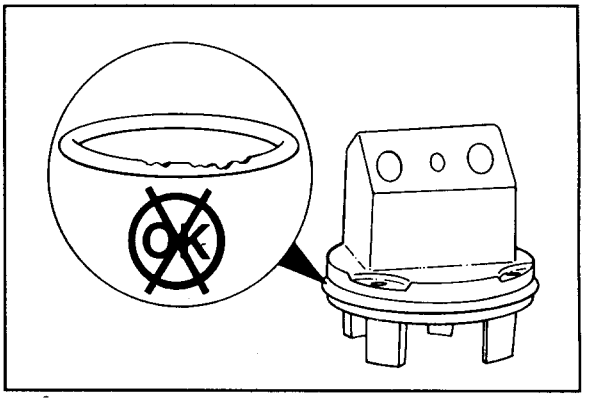

6. Assemble the air compressor. Refer to Procedure 4-11.
7. Operate the engine and check for air leaks.

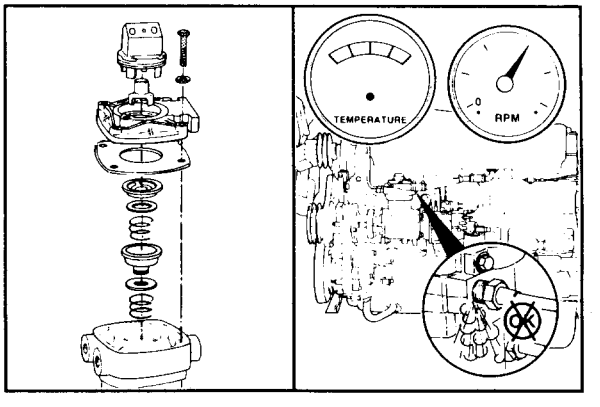

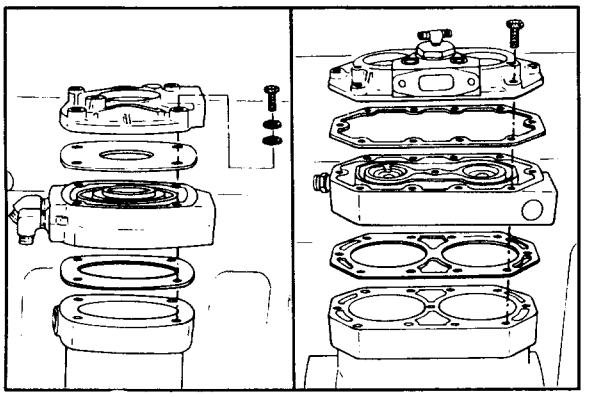

Air Compressor, Cylinder Head - Replace (4-11)

Remove

NOTE: The illustrations shown will be of the single cylinder air compressor. Differences in procedures for one and two cylinder Cummins air compressors will be shown where necessary.

NOTE: On Cummins two cylinder air compressors, complete the disassembly and assembly steps for the valve assemblies on both cylinders.

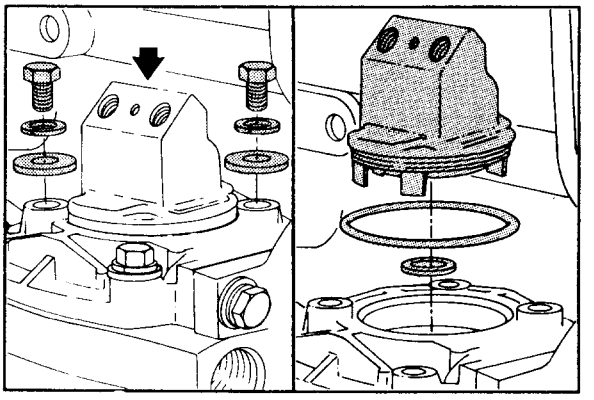

Caution: The unloader valve body is installed with spring tension.

1. Hold the unloader valve body down and remove the two captive washer capscrews and the two plain washers.
2. Remove the unloader valve body.
3. Remove the O-ring seal.
4. Remove the rectangular ring seal.

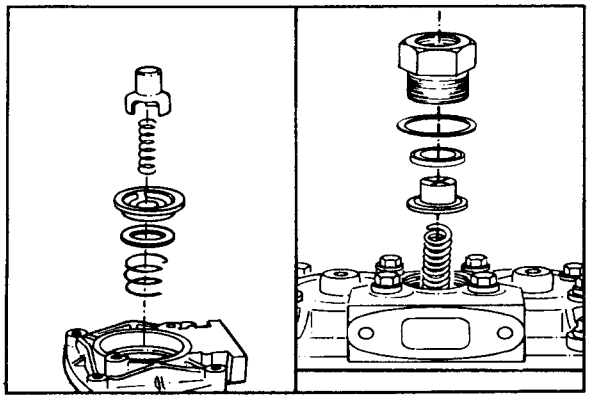

5. Remove the unloader valve cap.
6. Remove the unloader valve spring.
7. Remove the intake valve seat and valve.
8. Remove the intake valve spring.

NOTE: On Cummins two cylinder air compressors, the center unloader **must** be removed as described in steps 2 through 6.

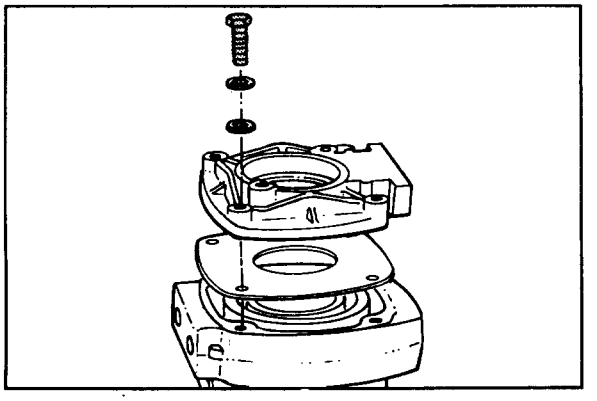

9. Remove the capscrews, lockwashers, and plain washers.
10. Remove the cover and discard the gasket.

11. Remove the head and discard the gasket.
12. Hold the head bottom side up and use thumb pressure to remove the exhaust valve seat assembly.

NOTE: If the exhaust valve seat assembly can not be removed by thumb pressure, use Part No. ST-544 Valve Seat Puller.

NOTE: For SS296 and ST676 model air compressors, a press and Part No. 3377416 Air Compressor Seat Removal Tool will be required.

13. Remove the two O-ring seals from the exhaust valve seat.
14. Remove the exhaust valve.
15. Remove the compression spring and wear plate from the head.

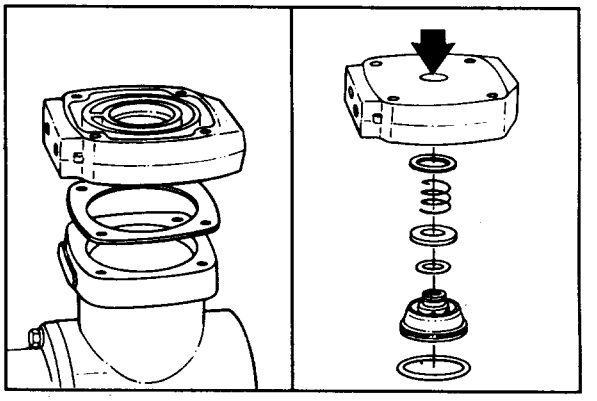

Install

1. Install the wear plate and compression spring as shown in the head.
2. Install the exhaust valve on the exhaust valve seat.
3. Install the small O-ring seal on the seat to hold the valve in position.
4. Install the large O-ring seal on the seat.
5. Use clean engine oil to lubricate the O-ring seals.
6. Use hand pressure to install the exhaust valve assembly in the head.

NOTE: For SS296 and ST676 model air compressors, a press and Part No. 3377415 Air Compressor Seat Installation Tool will be required.

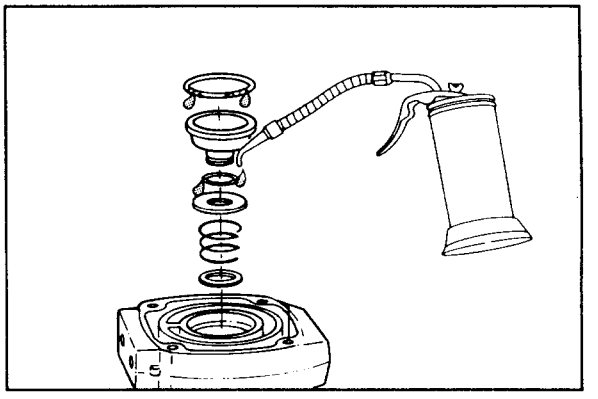

7. Use new gaskets to install the cylinder head and cover.
8. Install the flat washers, lockwashers, and capscrews.

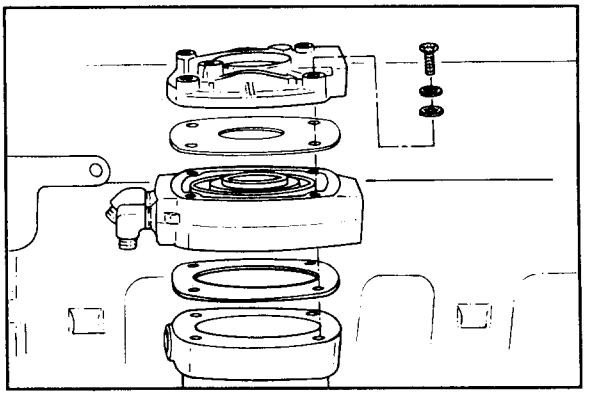

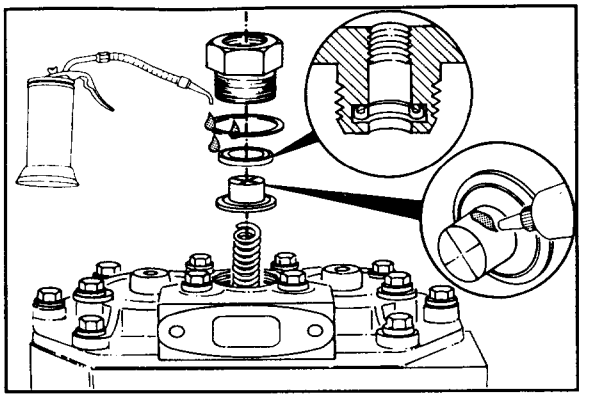

NOTE: For Cummins two cylinder air compressors, complete steps 13 through 19 to install the center unloader valve assembly before the cylinder head capscrews are tightened.

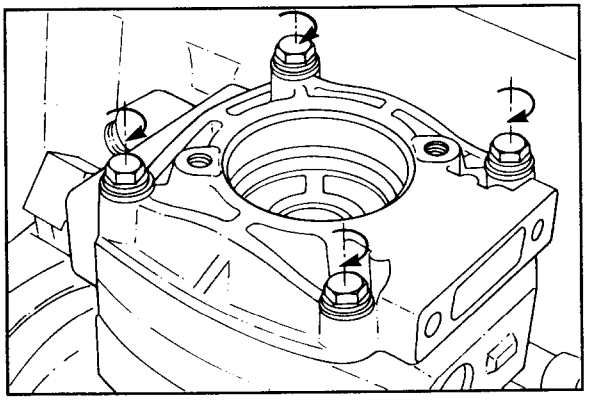

9. Tighten the cylinder head capscrews of the single cylinder compressor in alternating sequence to the following torque values:
   a. 7 N•m [60 in.-lb]
   b. 15 N•m [10 ft-lb]
   c. 20 N•m [15 ft-lb]
   d. 25 N•m [20 ft-lb]

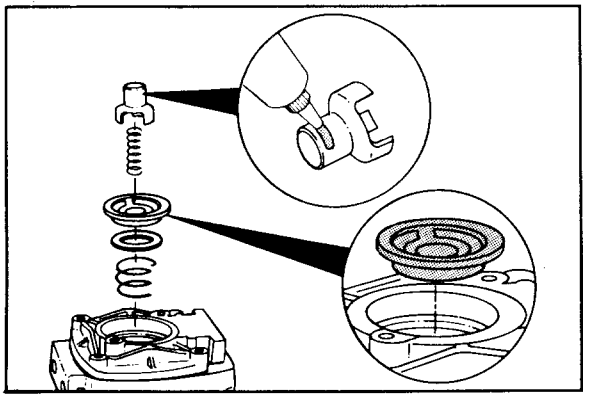

10. Install the intake valve spring as shown.
11. Install the intake valve.
12. Install the intake valve seat with the flange side up as shown.
13. Install the unloader valve cap spring.
14. Install the unloader valve cap.
15. Use anti-seize compound to lubricate the outside diameter of the cap.

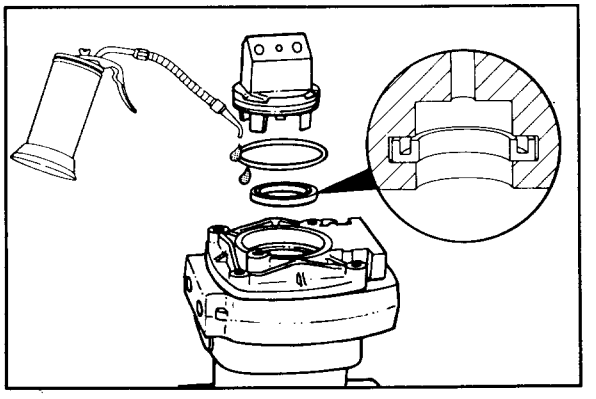

Caution: The rectangular ring seal must be installed with the grooved side up.

16. Install the rectangular ring seal as shown.
17. Install the O-ring seal.
18. Use clean engine oil to lubricate the O-ring seal.

Caution: Press the unloading valve body down to be sure the tangs of the unloader valve cap are in the three slots of the intake valve seat.

19. Install the unloading valve body.

NOTE: Tighten the cylinder head capscrews of the Cummins two cylinder compressor after the unloader valve body has been installed in the sequence shown to the following torque values:

a. 15 N•m [10 ft-lb]

b. 25 N•m [20 ft-lb]

c. 40 N•m [30 ft-lb]

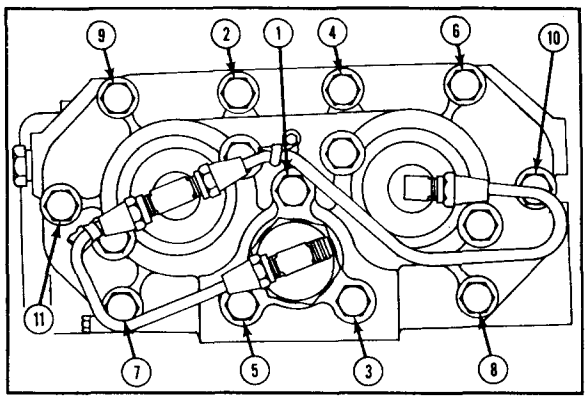

20. Hold the unloading body down and install the two plain washers and captive washer capscrews.
21. Tighten the capscrews to 15 N•m [120 in-lb] torque.

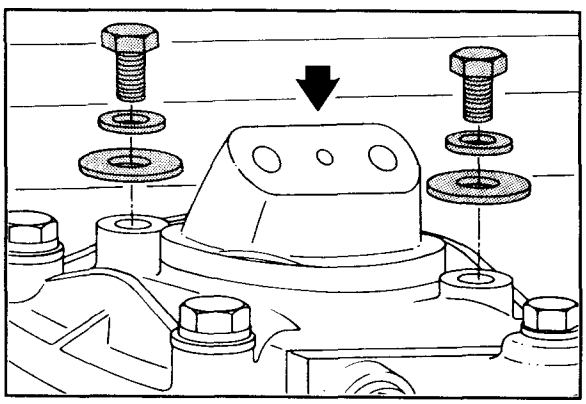

Air Compressor - Replace (4-12)

Remove

NOTE: The illustrations shown will be of the single cylinder air compressor. Differences in procedures for one and two cylinder Cummins air compressors will be shown where necessary.

1. Steam clean the air compressor and dry with compressed air.
2. Remove the fuel pump. Refer to Procedure 5-07.

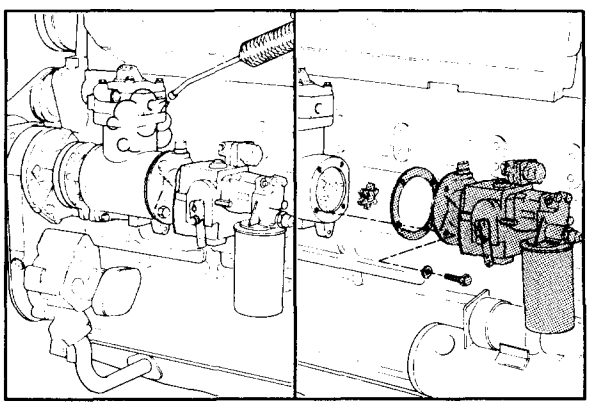

3. Drain the engine coolant. Refer to Procedure 1-06.
4. Remove the coolant lines from the air compressor.

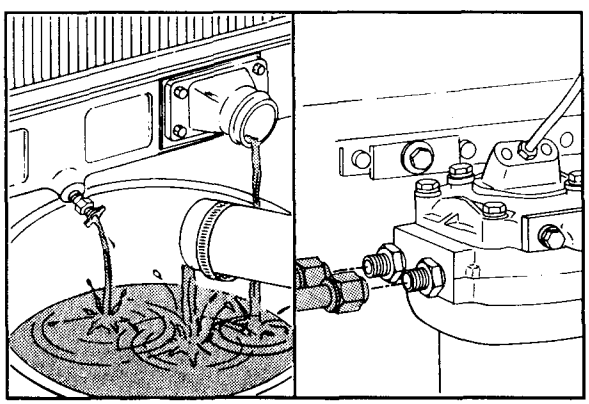

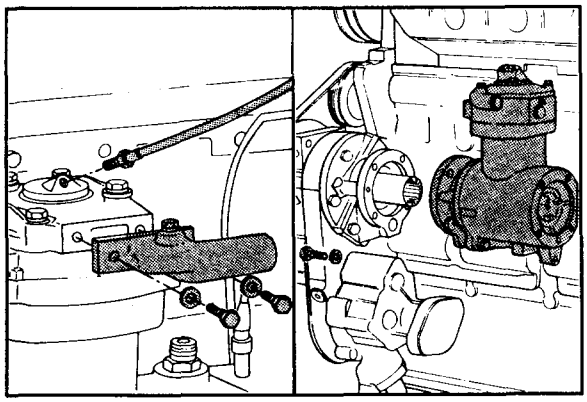

5. Remove the air connections from the air compressor.
6. Remove the air compressor support bracket and capscrews.
7. Remove the four capscrews, the air compressor, and splined coupling.

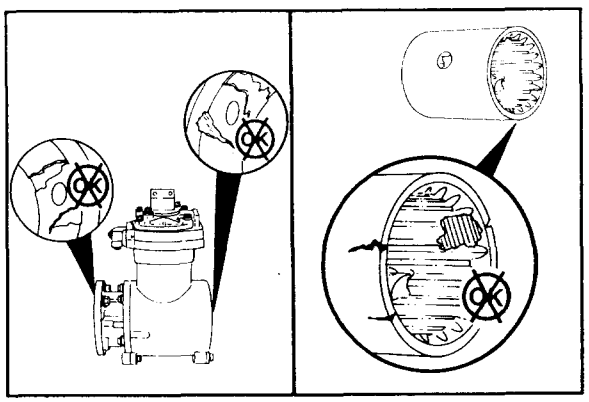

Inspect

1. Visually inspect the compressor housing for cracks or damage.
2. Visually inspect the splined coupling for cracks or damage.

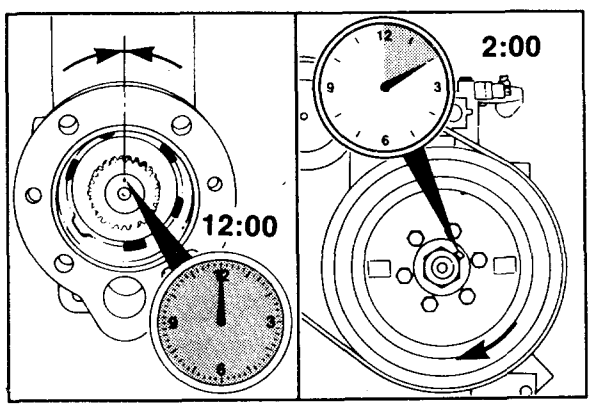

Install

1. Position the timing mark on the air compressor crankshaft at the 12:00 o'clock position.
2. Position the accessory drive shaft dowel pin at the 2:00 o'clock position as viewed from the front of the engine.

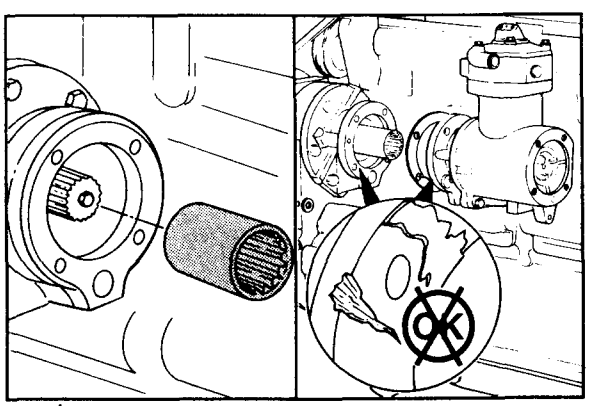

3. Install the splined coupling on the accessory drive.
4. Be sure the gasket surfaces of the accessory drive and air compressor are clean and **not** damaged.

5. Use a new gasket to install the air compressor and four capscrews to the accessory drive.
6. Tighten the capscrews to 65 N•m [50 ft-lb] torque.
7. Install the air compressor support bracket.
8. Tighten the capscrews to 45 N•m [35 ft-lb] torque.

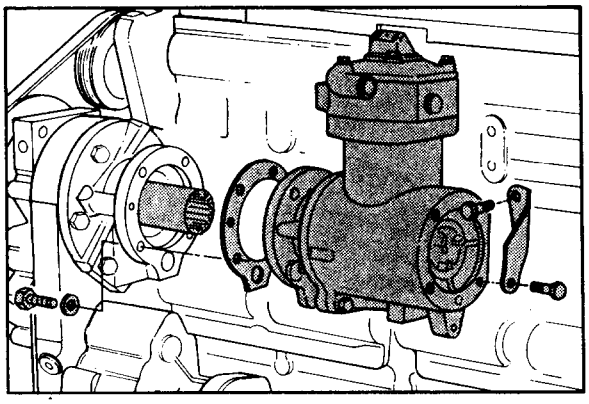

Caution: If rubber grommets are used on the coolant lines, be sure they are installed carefully to prevent cuts or tears to the grommets which will cause coolant leaks.

9. Install the coolant and air lines to the air compressor and tighten.
10. Install the fuel pump drive coupling on the air compressor.

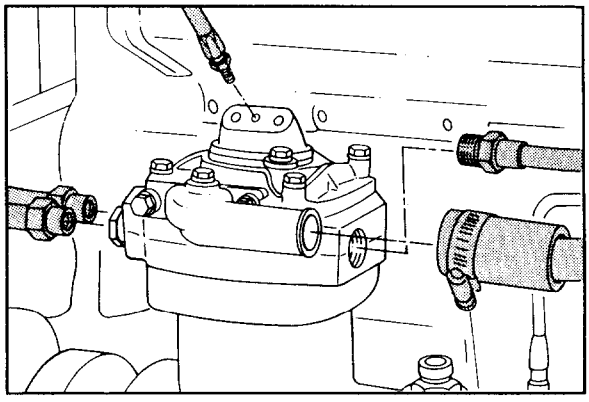

11. Be sure the gasket surfaces of the air compressor and fuel pump are clean and **not** damaged.
12. Use a new gasket to install the fuel pump to the air compressor.
13. Tighten the capscrews to 45 N•m [35 ft-lb] torque.

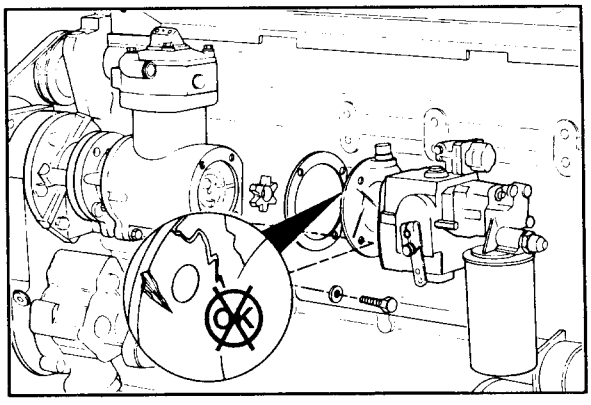

14. Install all fuel tubing to the fuel pump and tighten.
15. Connect the electrical wiring to the fuel pump.

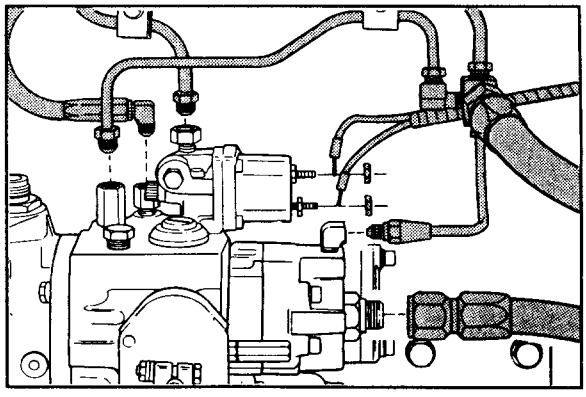

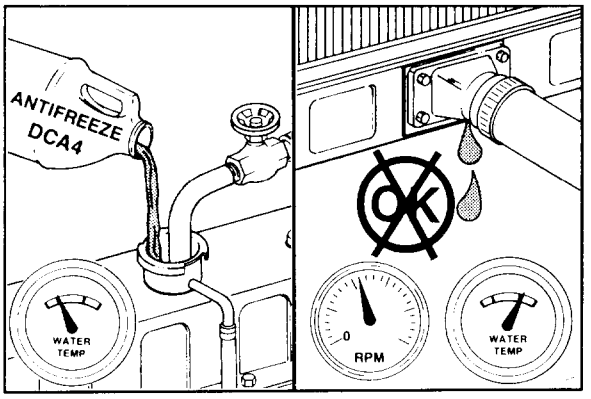

16. Fill the engine cooling system. Refer to Procedure 1-07.
17. Operate the engine and check for leaks.

Section 5 - Fuel System

Section Contents

	Reference No.	Page No.
General Information	5-01	2
Specifications	5-02	3
Flow Diagrams	5-03	8
Service Tools	5-04	10

System Troubleshooting And Repair List

	Procedure No.	Page No.
Air Leaks	5-12	53
Cylinder Misfire	5-13	60
Driveability - Low Power Check List		83
Engine Oil Dilution by Fuel Oil	5-14	61
Engine Stall Speed and Time Check	5-19	76
Fuel Consumption Check	5-16	66
Fuel Consumption Check List		85
Fuel Line Restriction	5-15	64
Fuel Pump - Adjust	5-05	16
Fuel Pump - Flow Check, Prime and Rotation	5-11	50
Fuel Pump - Replace	5-07	36
Fuel Shutoff Valve	5-10	48
Fuel System Maintenance	5-08	41
Injector - Replace	5-06	32
Low Power Check	5-17	71
Low Power Check List		83
Stall Speed Check List		81
Throttle Response Time by Road Test	5-18	73
Variable Speed Governor Leaking Fuel	5-09	45

Fuel System - General Information (5-01)

The PT fuel system is used exclusively on Cummins Diesels. The identifying letters, "PT", are an abbreviation of "pressure-time."

The PT Fuel System consists of the fuel pump, supply lines, drain lines, fuel passages, and injectors.

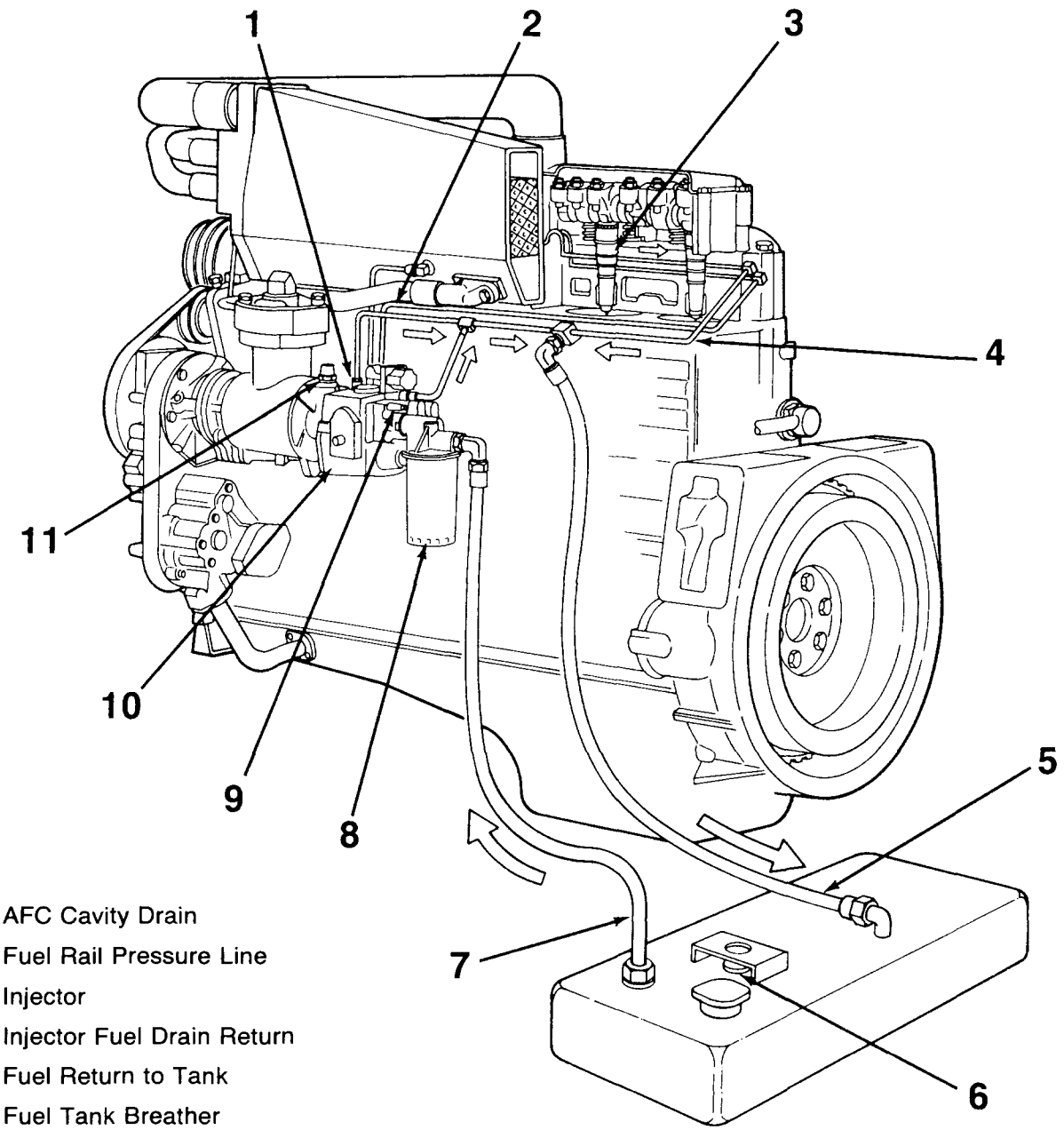

1. AFC Cavity Drain
2. Fuel Rail Pressure Line
3. Injector
4. Injector Fuel Drain Return
5. Fuel Return to Tank
6. Fuel Tank Breather
7. Fuel Inlet Supply
8. Fuel Filter
9. Gear Pump Coolant Drain
10. Fuel Pump
11. Tachometer Drive

Fuel System Specifications (5-02)

Basic Application Requirements

Engine Idle Speed ..... 650 to 725 RPM

Fuel Inlet Maximum Restriction

Clean Fuel Filter ..... 100 mm Hg. (4.0 inch Hg.)
Dirty Fuel Filter ..... 200 mm Hg. (8.0 inch Hg.)

Fuel Drain Line Maximum Restriction

Without Check Valves.... 65 mm Hg. (2.5 inch Hg.)
With Check Valves..... 165 mm Hg. (6.5 inch Hg.)

Fuel Check Valve between Fuel Filter and Fuel Pump

Minimum Opening Pressure ..... 2.1 kPa (0.3 psi)

Fuel Check Valve between Fuel Pump and Cylinder Head

Opening Pressure..... 21 to 55 kPa (3 to 8 psi)

Engine Minimum Cranking Speed ..... 150 RPM

Fuel Check Valve in Fuel Drain Line

Opening Pressure. 13 to 25 mm Hg. (1/4 to 1/2 psi)

Derate Engine Fuel Rate for High Altitude. 4% per 300 M (1000 ft) above 3600 m (12,000 ft.)

Derate Engine Fuel Rate for Hot Weather. 2% per 11°C Above 38°C (1% per 10° above 100°F)

Shutoff Valve Solenoid Coil Resistance in Ohms

6VDC ..... 1.72 - 2.02

12VDC ..... 7.0 - 8.0

24VDC ..... 28 - 32

32VDC ..... 49.5 - 56.5

36VDC ..... 54.5 - 61.5

48VDC ..... 105 - 125

115VDC ..... 645 - 735

Installation Publications

The following publications are available to provide fuel system installation recommendations approved by Cummins Engine Company, Inc.:

1. Automotive Installation Recommendations (Fuel System), Bulletin No. 952849.
2. Construction, Mining, Logging, and Agriculture Installation Recommendations (Fuel System), Bulletin No. 3382015.
3. Parts and Service Publications can be purchased from:

   Literature Control Service

   10003 Bunsen Way

   P. O. Box 99085

   Louisville, KY 40299

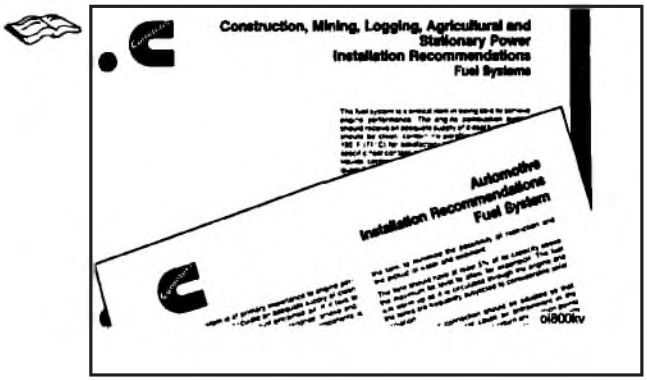

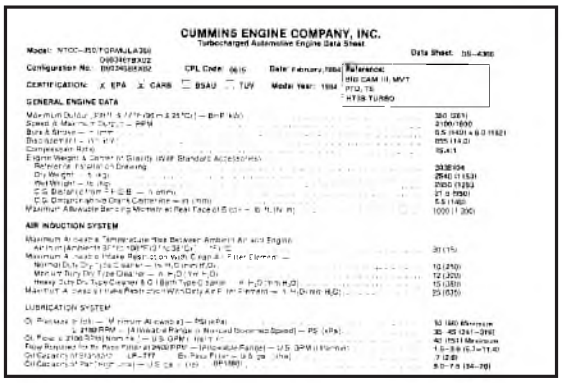

4. Contact the nearest Cummins authorized repair location for engine fuel system specifications and requirements provided on the ''Engine Data Sheet'' for your specific engine and application.

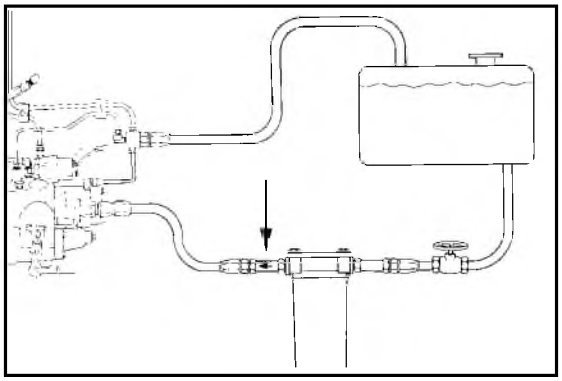

Overhead Tank Installation Requirements

1. If the fuel filter is lower than the fuel tank, install a check valve in the filter outlet fuel line. See the Installation Recommendations.
2. The check valve on the outlet side of the fuel filter prevents gear pump fuel drainback.
3. Install a fuel shut off valve between the filter and the fuel tank.

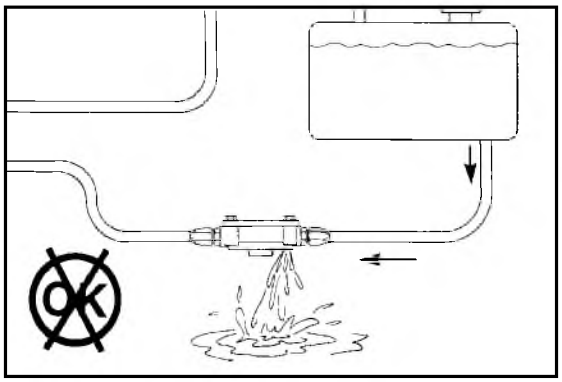

Warning: If the fuel line shutoff valve is not used, the overhead tank can drain when the fuel filter is changed. Spilled fuel is a fire hazard.

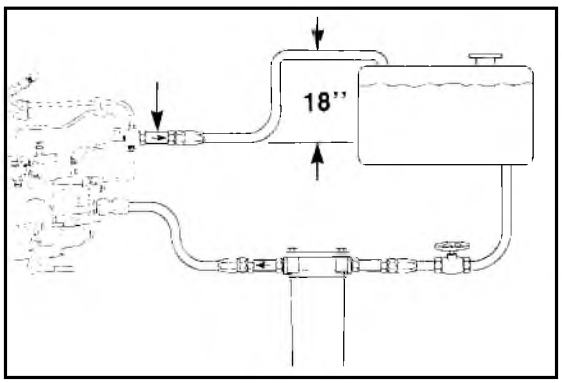

4. Install a check valve in the fuel drain line when the maximum fuel level in the fuel tank is even or above the fuel drain that is in the cylinder head. Install the valve with the fuel flow arrow toward the fuel tank.

5. When the maximum fuel level is above the injector drain, install the check valve in the fuel line between the fuel pump and the cylinder head with arrow pointed toward the cylinder head.

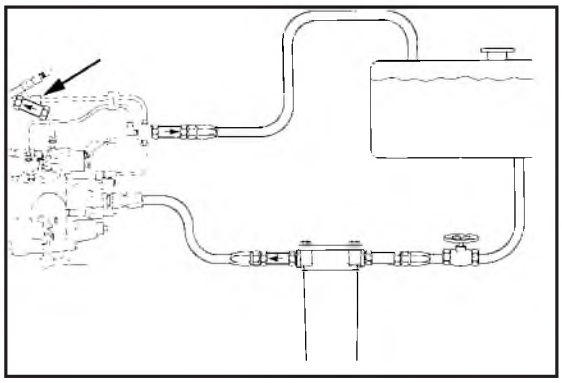

Caution: If the fuel line check valves are not used, an engine cylinder can be filled with fuel. This can cause a hydraulic lock in the cylinder.

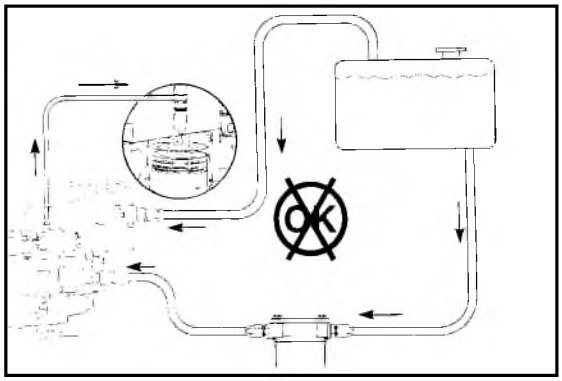

Install the check valve in the AFC air connection when an overhead tank is required.

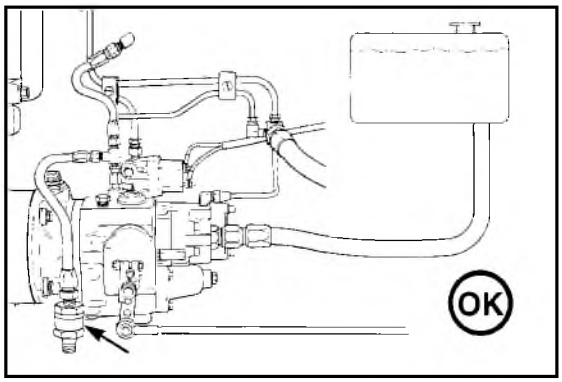

Caution: If the air connection check valve is not in use and the AFC bellows has a hole, fuel can go up the AFC air hose and into the cylinders. This can cause a hydraulic lock in the cylinder.

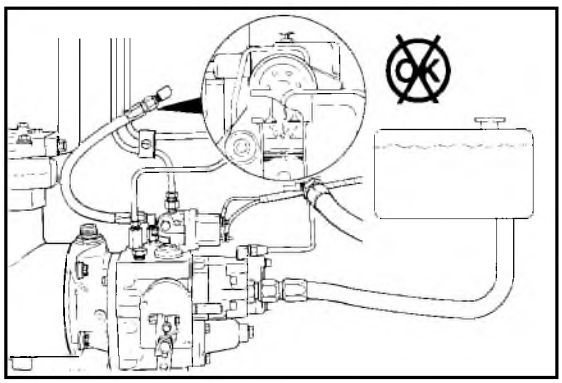

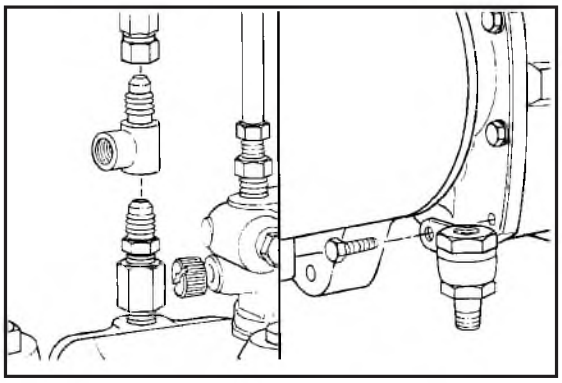

Air Connection Check Valve Installation

1. Install a pipe tee in the AFC air connection in the AFC cover.
2. Install the pipe clamp that holds the check valve on the lower front cover capscrew.

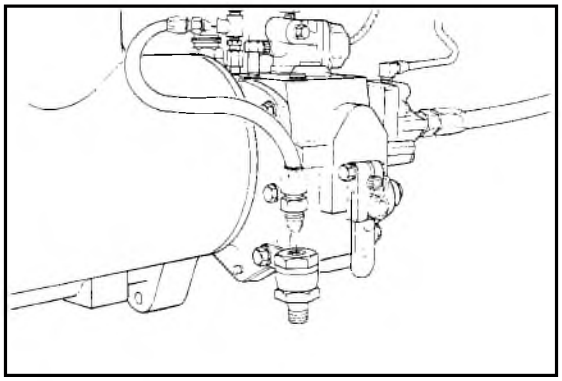

3. Install a No. 4 hose between the tee and the valve.

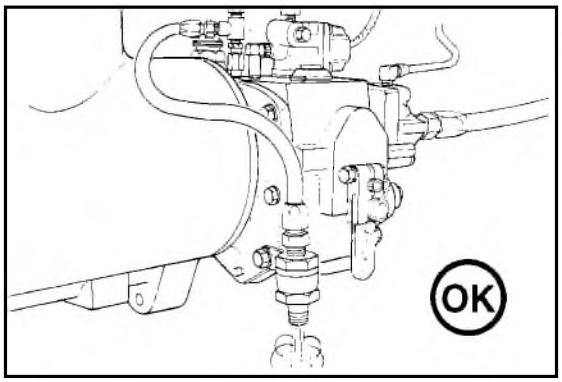

4. When the engine is operating, a small amount of air (turbocharger pressure) will come out of the bottom of the valve.

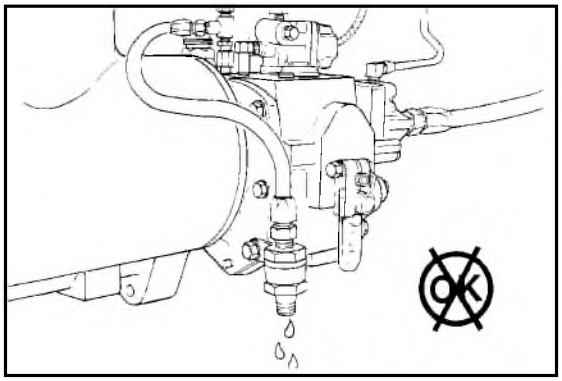

5. If the AFC bellows fails, fuel will drain out of the valve.

Fuel Oil Recommendations

Cummins diesel engines have been developed to take advantage of the high energy content and generally lower cost of No. 2 diesel fuels. A Cummins diesel engine will also operate satisfactorily on No. 1 fuels or other fuels within the following specifications.

Fuel Oil Recommended Properties:

Viscosity (ASTM D-445)	**1.3 to 5.8 CentiStoke (1.3 to 5.8 mm^2 per second) at 40°C [104°F].**
Cetane Number (ASTM D-613)	40 minimum except in cold weather or in service with prolonged low loads, a higher cetane number is desirable.
Sulfur content (ASTM D-129 or 1552)	**Not** to exceed 1% by weight.
Water and Sediment (ASTM D-1796)	**Not** to exceed 0.1% by weight.
Carbon Residue (Ransbottom ASTM D-524 or D-189)	**Not** to exceed 0.25% by weight on 10% residue.
Flash Point (ASTM D-93)	52°C [125°F] minimum. Certain marine registries requires higher flash points.
Density (ASTM D-287)	-1 to 6°C [30 to 42°F] A.P.I. at 16°C [60°F] (0.816 to 0.876 Sp. Gr.)
Cloud Point (ASTM D-97)	5.6°C [10°F] below lowest temperature expected to operate.
Active Sulfur-Copper Strip-Corrosion (ASTM D-130)	**Not** to exceed No. 2 rating after 3 hours at 50°C [122°F].
Ash (ASTM D-482)	**Not** to exceed 0.02% by weight.
Distillation (ASTM D-86)	The distillation curve should be smooth and continuous. At least 90% of the fuel should evaporate at less than 360°C [680°F]. All of the fuel should evaporate at less than 385°C [725°F].

Fuel System Flow Diagrams (5-03)

Fuel Flow Through Fuel Pump

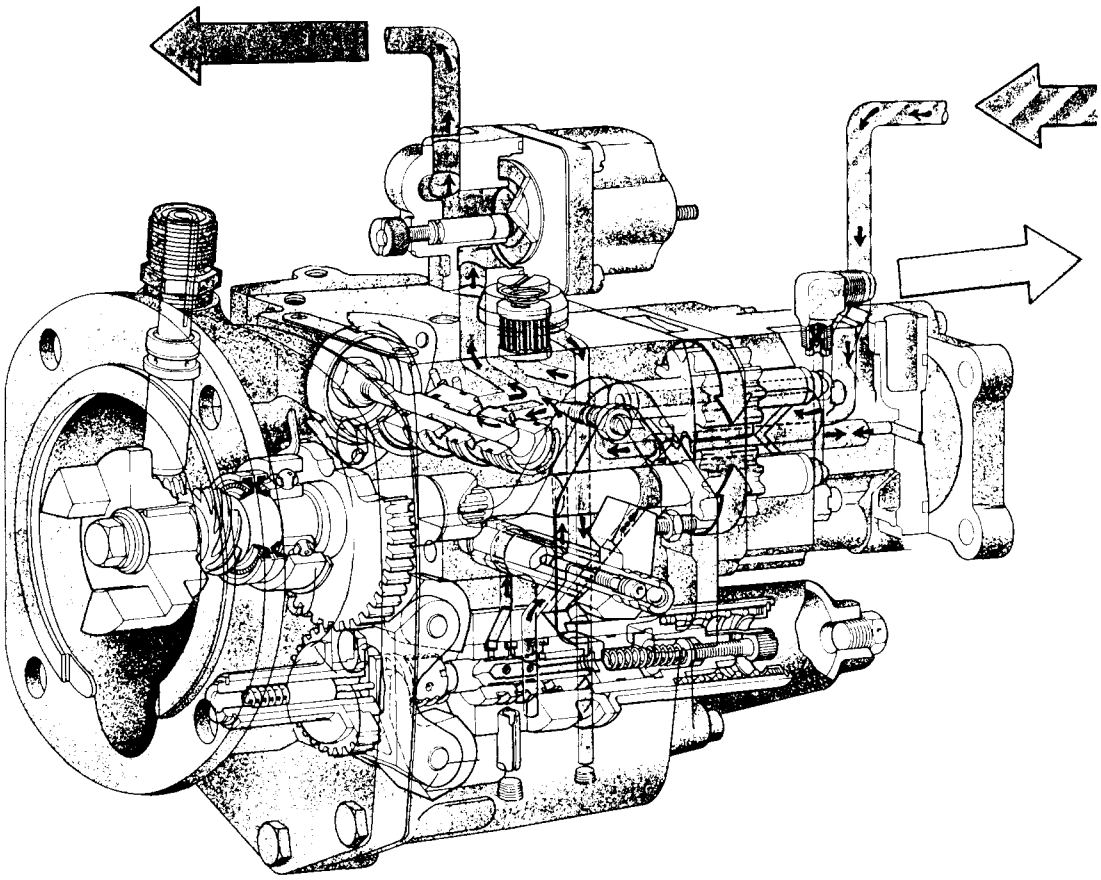

Injector Drive Train

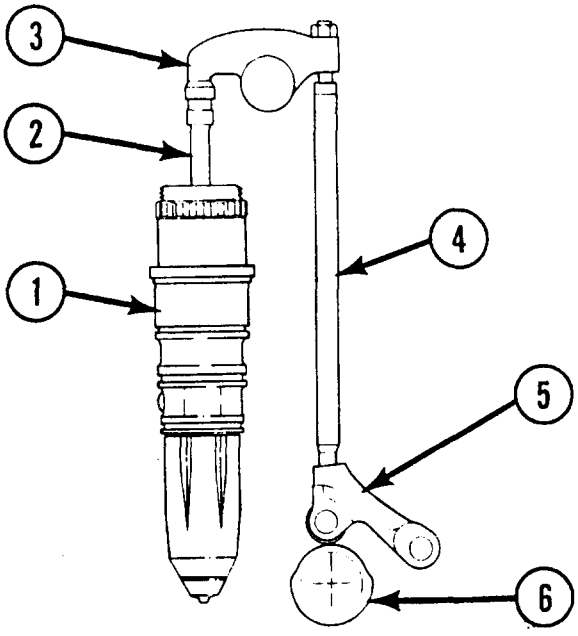

1. Injector
2. Injector Link
3. Rocker Lever
4. Push Rod
5. Cam Follower
6. Camshaft

PT (Type G) AFC Connection And Adjustment Locations

1. Tachometer Drive
2. AFC Fuel Return
3. AFC Air Supply
4. Priming Plug
5. Fuel to the Injector
6. Shutoff Valve Electric Connection
7. Gear Pump Fuel Return
8. Fuel Inlet Connection
9. Idle Speed Screw Location
10. Fuel Rate (Pressure) Screw

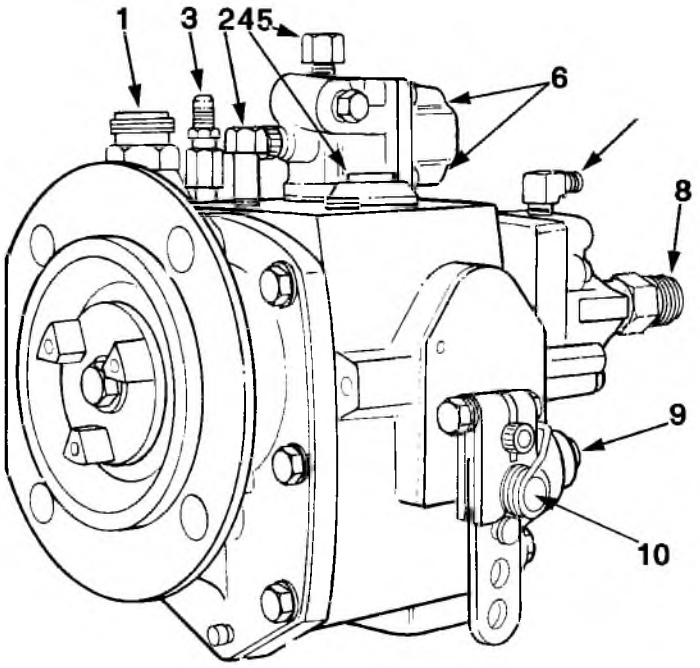

PT (Type G) AFC-VS Connection And Adjustment Locations

1. Tachometer Drive
2. AFC Air Supply
3. Fuel to the Injectors
4. VS High Speed Screw
5. VS Low (Idle) Speed Screw
6. Gear Pump Fuel Return
7. Fuel Inlet Connection
8. Idle Speed Screw Location
9. Fuel Rate (Pressure) Screw

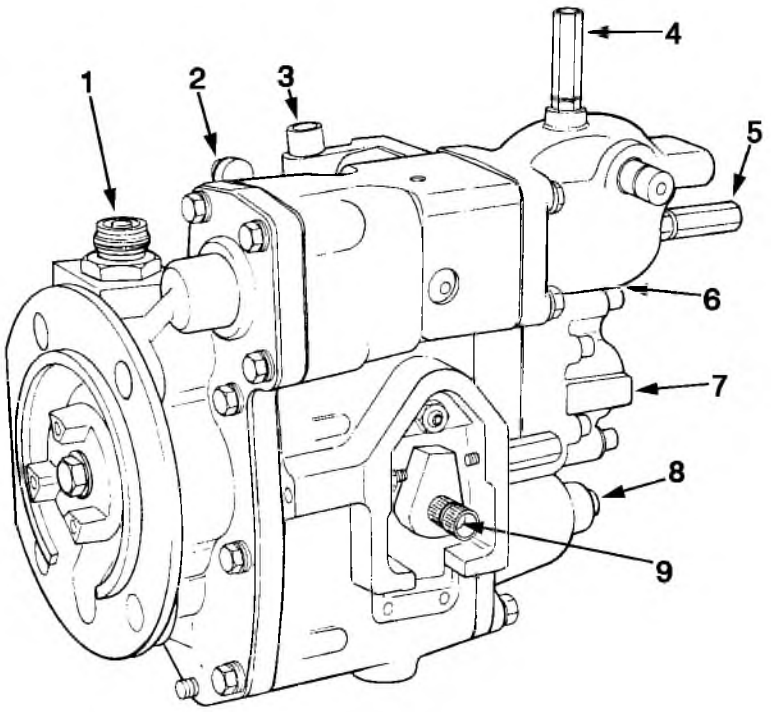

Service Tools For Fuel System (5-04)

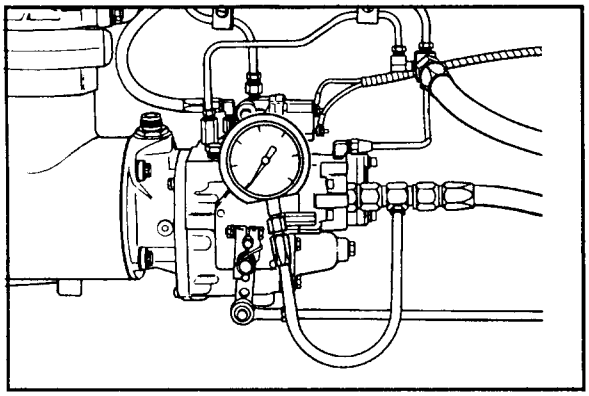

Part No. ST-434 Vacuum Gauge, consisting of:

- Part No. ST-434-12 Vacuum Gauge 0-760 mm Mercury [0-30 inch Mercury (Hg)]
- Part No. 3375845 Hose Adapter (No. 12 Hose)
- Part No. ST-434-2 Hose Adapter (No. 10 Hose)

Part No. ST-434-1 Hose Adapter (No. 8 Hose). This part is **not** included with ST-434. It **must** be ordered separately.

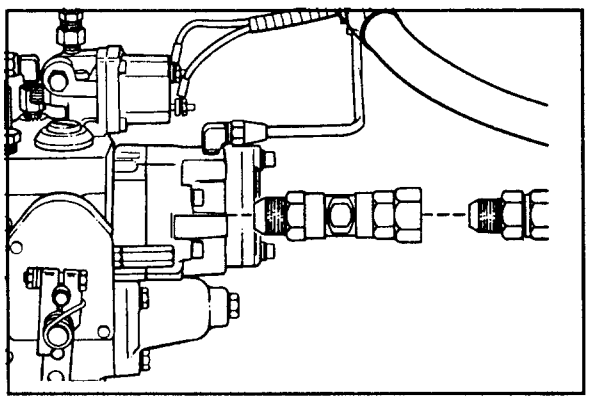

Fuel Sight Glass

- Part No. ST-998 Sight Glass (No. 10 Hose)
- Part No. 3375362 Sight Glass (No. 12 Hose)
- Part No. 3375808 Sight Glass (No. 16 Hose)

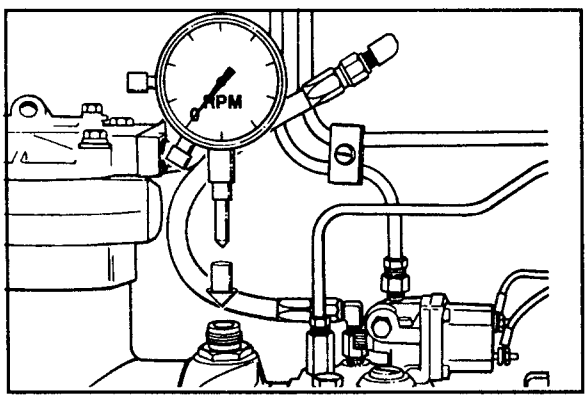

Part No. ST-774 Tachometer

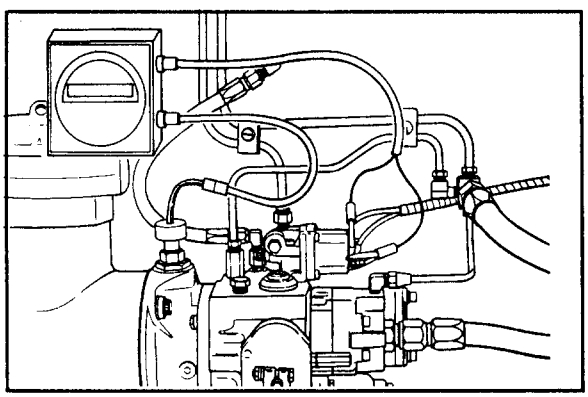

Part No. 3375631 Digital Tachometer

Part No. 3377462 Optical Tachometer

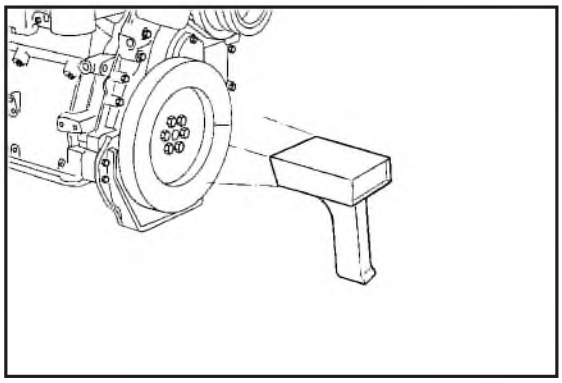

Part No. 3375044 Torque Wrench Kit - 0 to 17 N•m [0 to 150 in. lb.]

Torque wrench

Plastic Container

Part No. ST-753-2 Screwdriver Attachment

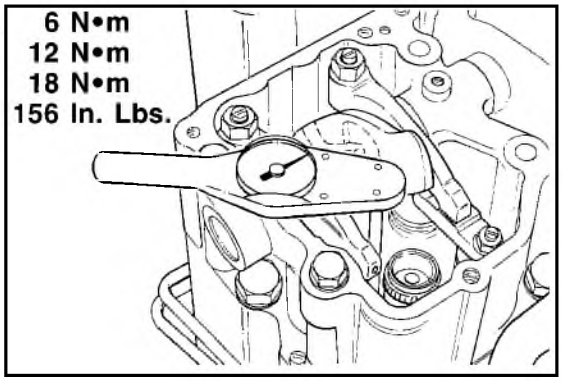

Part No. 3375790 Rocker Lever Actuator

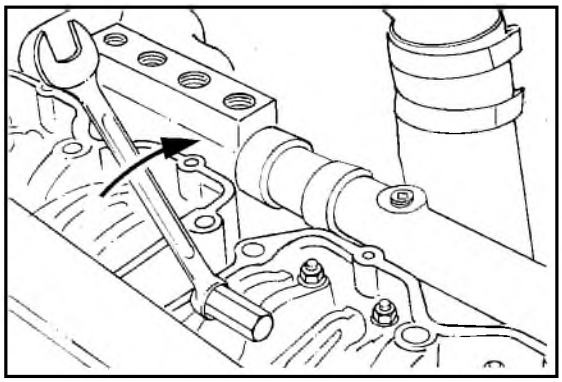

Part No. 3375049 Filter Wrench

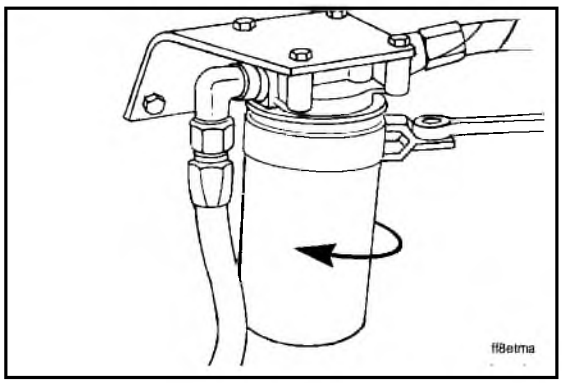

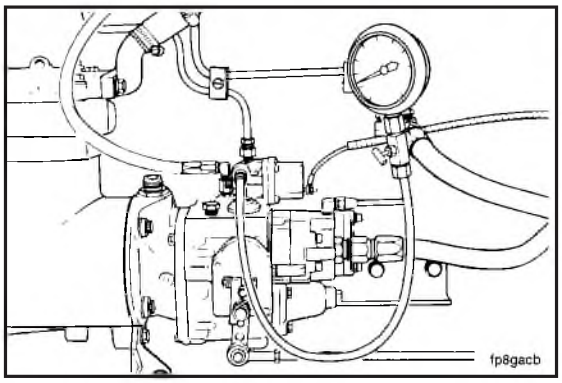

Part No. ST-435 Engine Rail Pressure Gauge

- Part No. ST-435-6 Pressure Gauge 0-2070 kPa [0-300 psi]
- Part No. 149837 Close Nipple
- Part No. ST-435-1 Hose
- Part No. ST-435-8 Male Quick Connect
- Part No. ST-435-7 Female Quick Connect

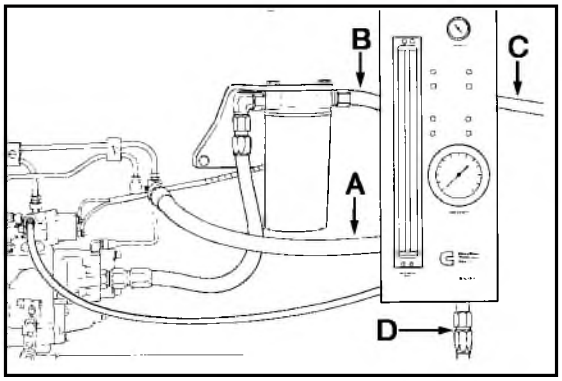

Part No. 3376375 Fuel Measuring Device

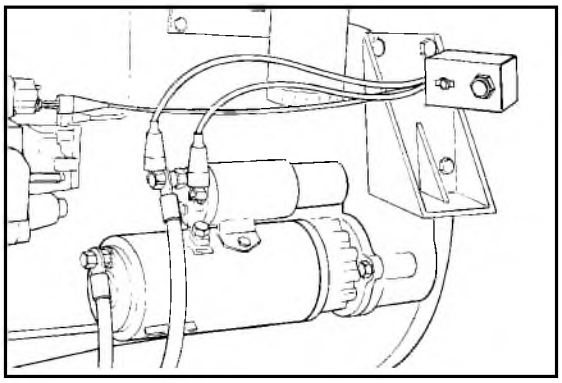

Part No. 3376506 Remote Starter Switch

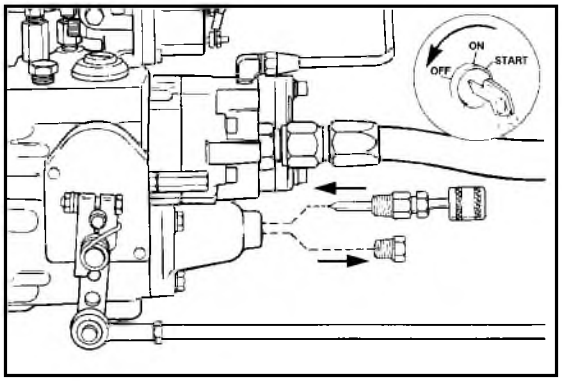

Part No. 3375981 Fuel Pump Idle Speed Adjusting Tool

Part No. ST-1273 Pressure Gauge 0-1900 mm Hg [0-75 in Hg]

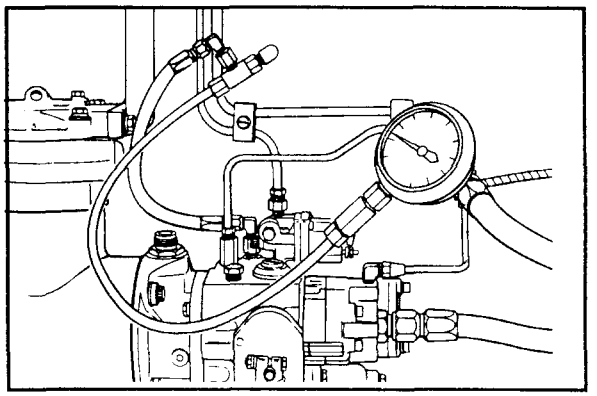

Part No. 3375515 Control Pressure Pump (manually regulated)

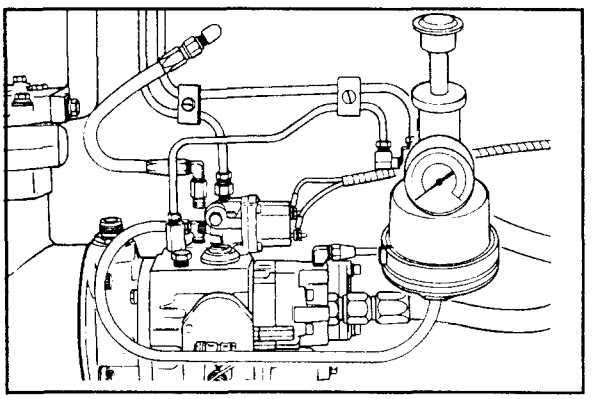

Part No. 3377253 Black Light

Part No. 3377394 Black Light.

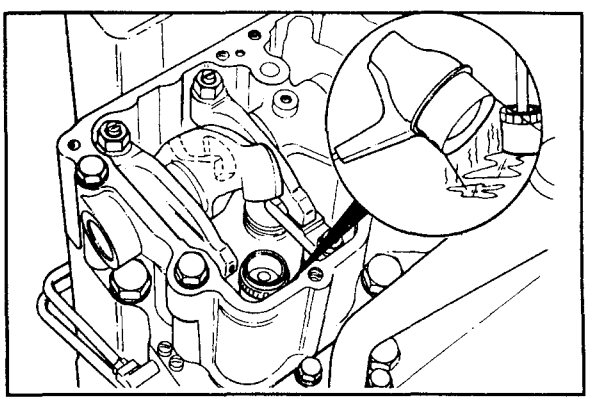

Part No. 3375703 Road Speed Governor Piston Installation Sleeve.

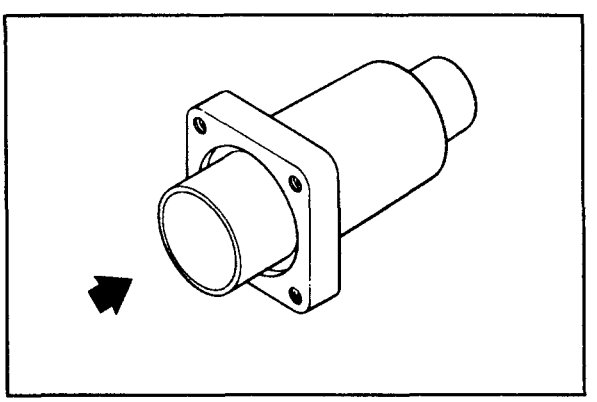

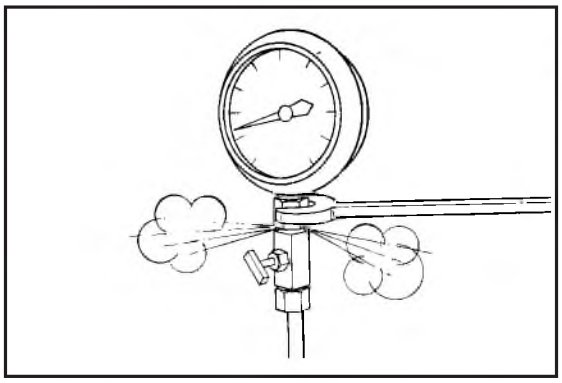

Proper Use Of Fuel System Gauges

NOTE: To be sure the reading is correct, **always** remove the air from the pressure gauge line before taking a reading.

1. Loosen the connection at the gauge to remove the air.

NOTE: Do **not** loosen the vacuum gauge connections when the engine is operating.

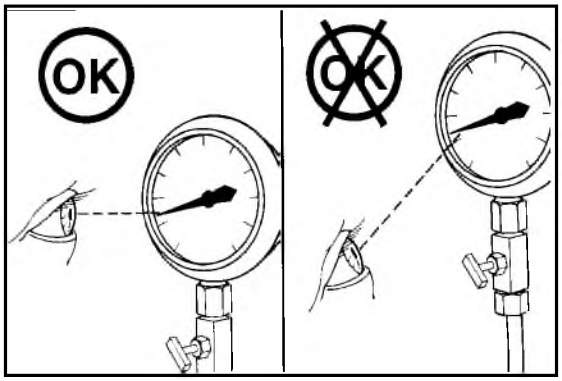

2. Read the gauge in direct alignment with the gauge hand.

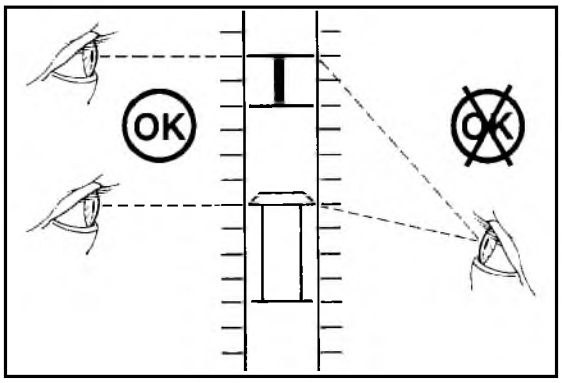

3. Read the flowmeter in direct alignment with the float.

NOTE: Read the level of the floats where indicated.

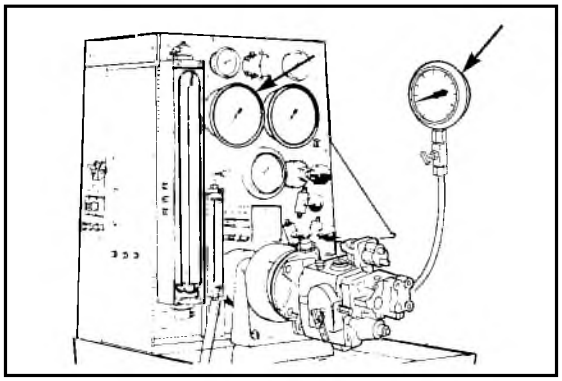

4. Portable fuel pressure gauges **must** be checked regularly against a master gauge or against the gauge on the fuel pump test stand. Adjust the valve on the gauge until the gauge needle stops vibrating.

5. When measuring the fuel inlet and drain line restriction, the back pressure and vacuum gauges **must** be on the same level as the connection point.

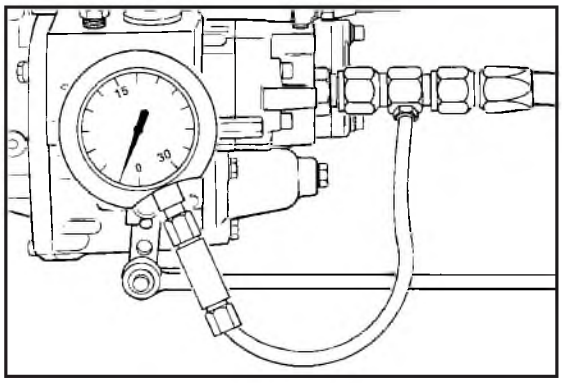

NOTE: Always use the same size and material of lines or hoses as was originally supplied with the gauge.

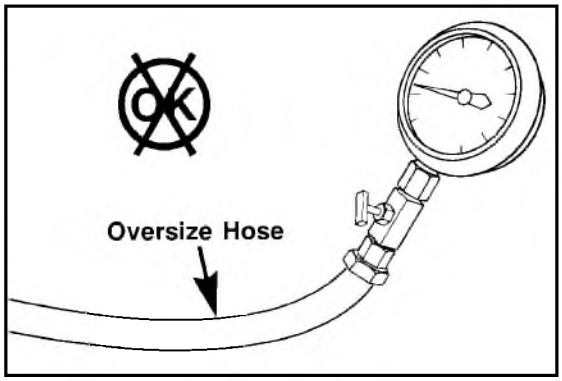

The distance from the gauge to the connection point **must** be as short as possible.

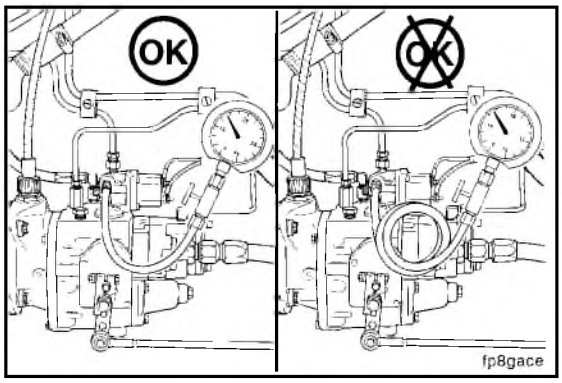

Caution: Never exceed the maximum capacity of the gauge or flowmeter. If the maximum is exceeded, check the gauge against a master gauge.

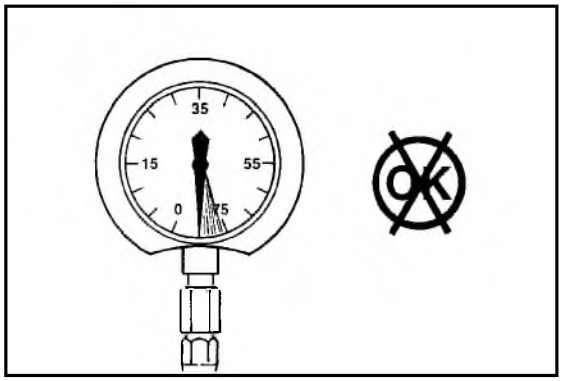

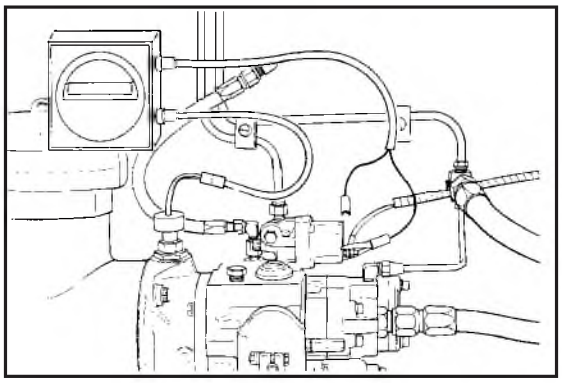

Fuel Pump Adjust (5-05)

Idle Speed - Adjust

1. To check the engine speed, use the vehicle tachometer, Part No. ST-744 Hand Tachometer, Part No. 3375631 Digital Tachometer, or Part No. 3377462 Optical Tachometer.

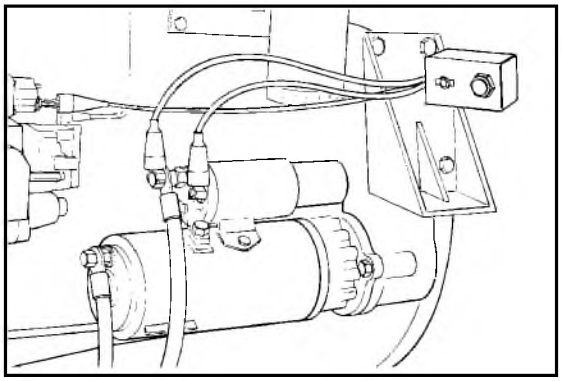

2. The remote starter, Part No. 3376506, can be used to start the engine. The leads are marked for their connection points.

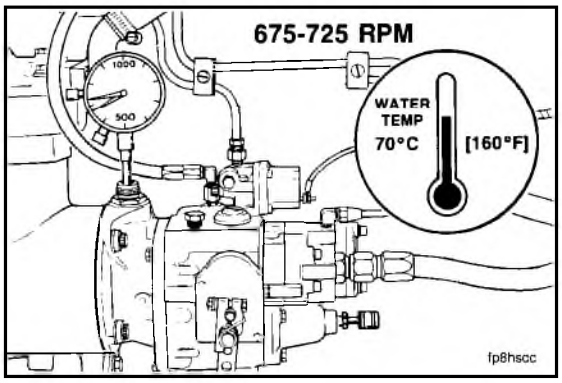

3. Adjust the engine low idle speed between 650 to 725 RPM.

NOTE: This adjustment is sometimes necessary on a new engine to compensate for the added engine driven accessories that are installed by the truck or vehicle manufacturer.

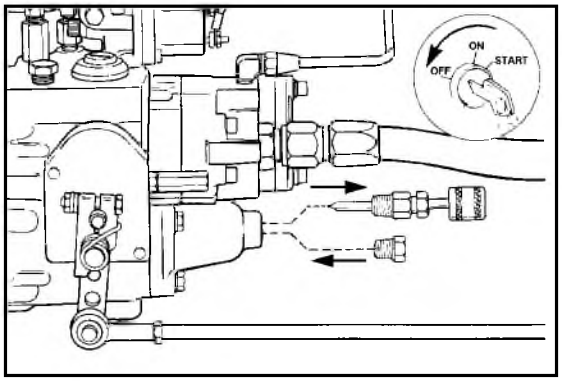

4. Stop the engine.
5. Remove the plug from the spring pack cover.
6. Install the fuel pump idle adjusting tool, Part No. 3375981, in the plug hole.

7. Operate the engine for 30 seconds at high idle to remove the air from the fuel system.

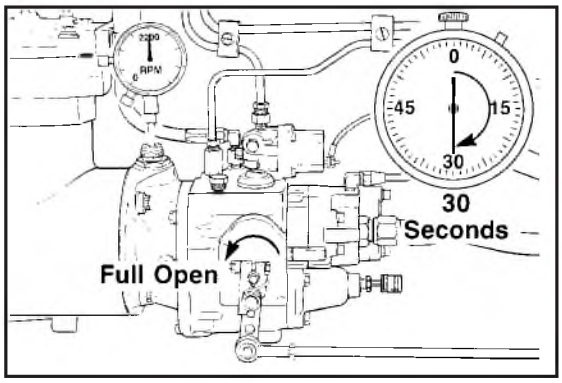

a. Make sure the engine is at or above 70°C [160°F].
b. Adjust the idle speed.

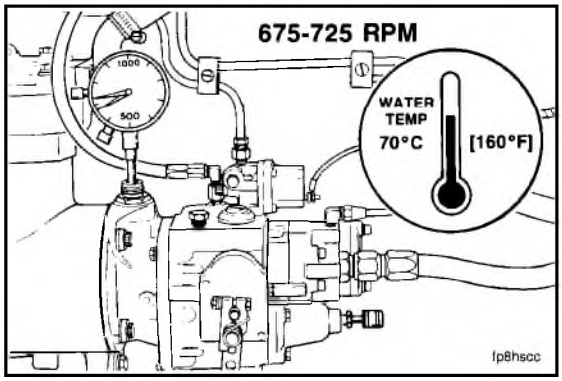

8. Remove the tool and install the plug.

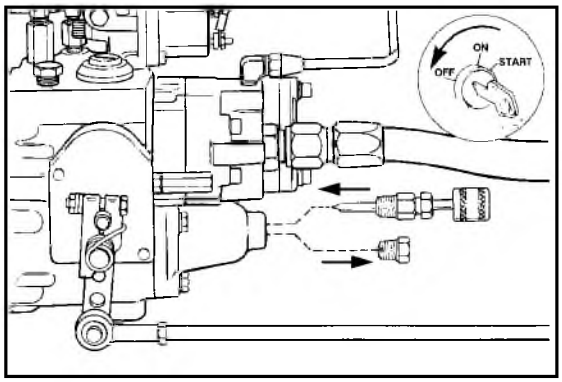

9. Operate the engine until the RPM is constant and all of the air is out of the fuel system.

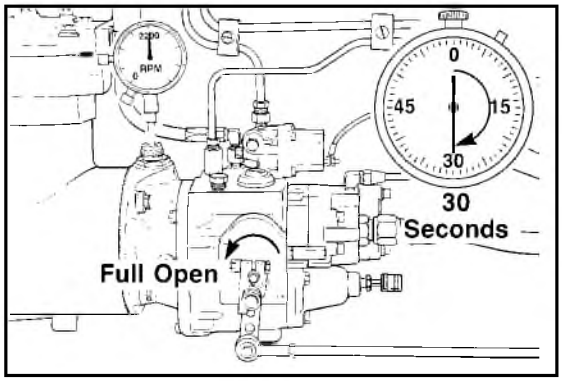

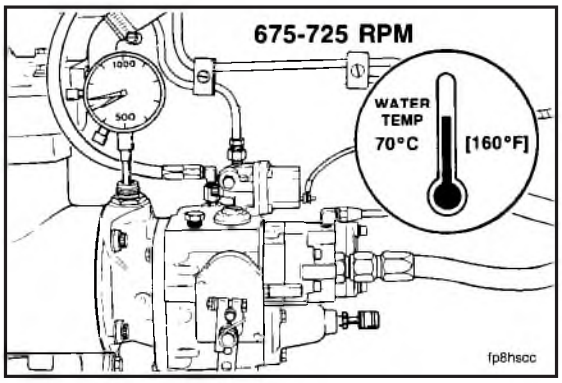

10. Check the idle speed again.

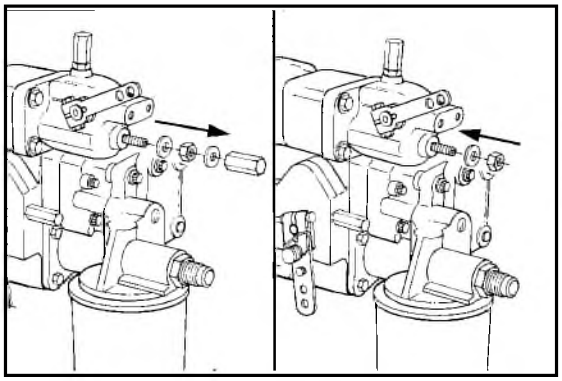

Variable Speed (VS) Governor Speed Adjustments

1. To adjust the VS idle speed, remove the lock nut and jam nut from the screw in the rear of the VS cover.
   a. Install a new copper washer and the jam nut.

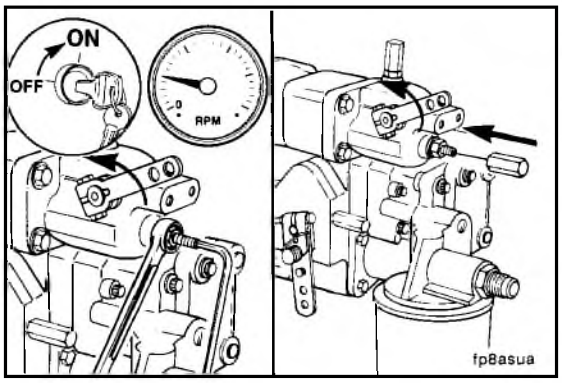

   b. Start the engine. Hold the VS lever in the idle position. Adjust the idle screw to the correct RPM and tighten the jam nut.
   c. Install a new copper washer and lock nut.

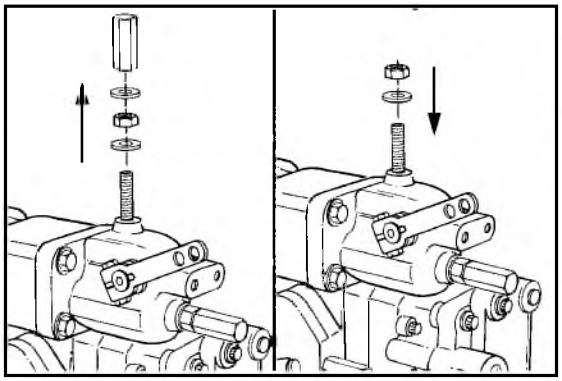

2. To adjust the VS high speed, remove the lock nut and jam nut from the top screw of the VS cover. Discard the copper washers.
   a. Install a new copper washer and the jam nut.

b. Start the engine. Hold the VS lever **clockwise** (in the high speed position). Adjust the screw to the correct RPM and tighten the jam nut.

c. Install a new copper washer and the lock nut.

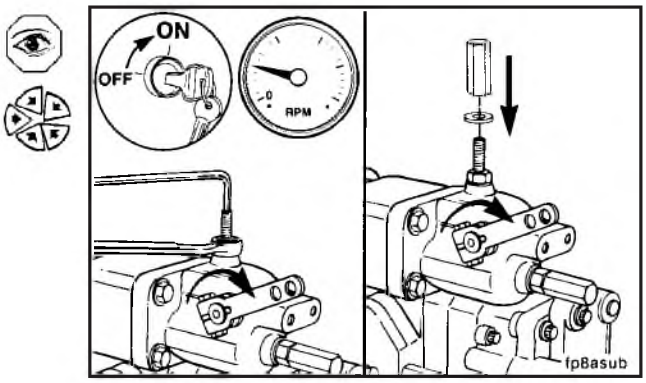

Variable Speed (VS) Governor Idle Spring Removal

1. Remove the linkage from the VS throttle lever.

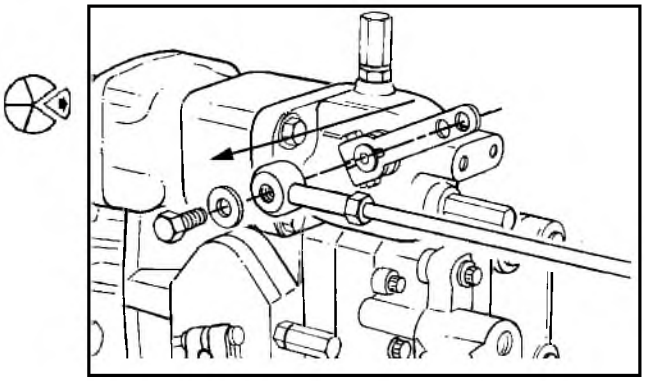

2. Remove the following parts:

   a. VS housing cover
   b. Gasket
   c. Throttle lever plunger
   d. High speed spring and the shims
   e. Plunger assist spring, if required
   f. Spring guide
   g. Idle spring

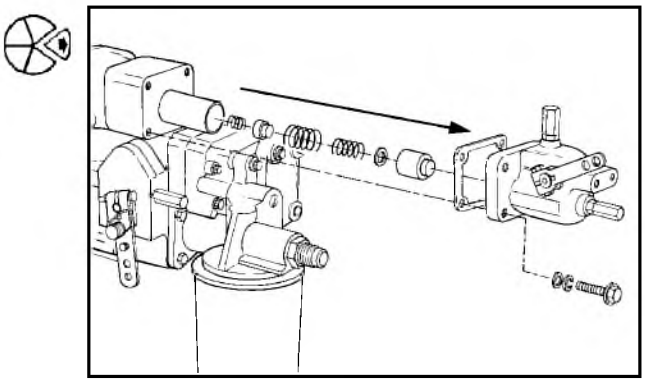

3. Install the following parts:

   a. Spring guide
   b. High speed spring and the shims
   c. Plunger assist spring if required
   d. Throttle lever plunger
   e. New cover gasket
   f. VS housing cover

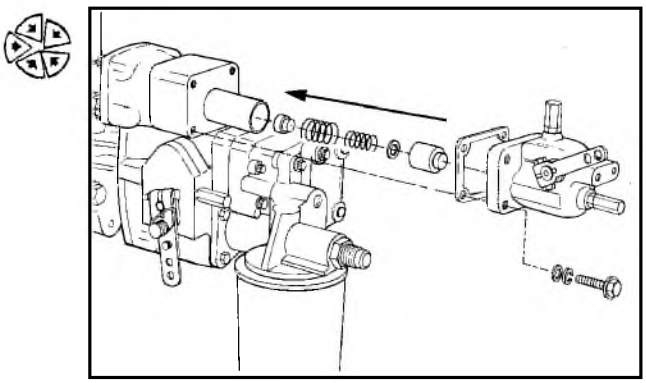

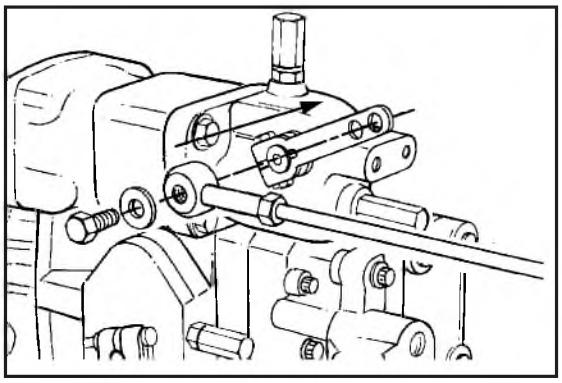

4. Install the linkage to the VS throttle lever.

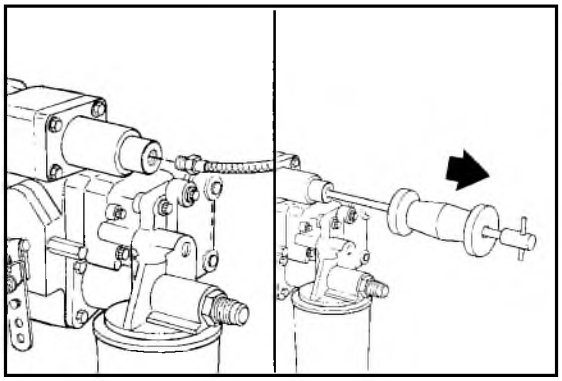

Adjust Road Speed Governor

1. Remove the air tube to the governor cover.
2. Remove the expansion plug from the cover.

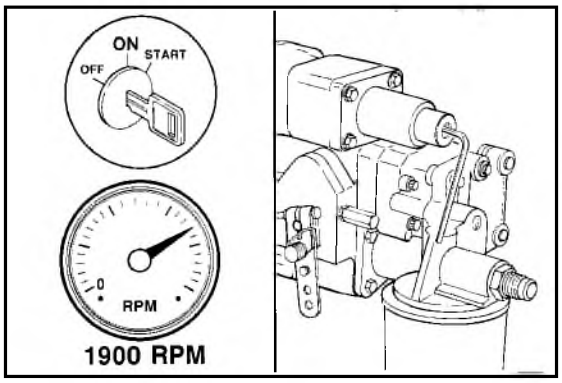

3. Start the engine.

NOTE: The road speed governor controls the engine maximum speed when the air is off of the governor.

4. Check the engine maximum speed. Adjust the set screw to get the correct RPM.

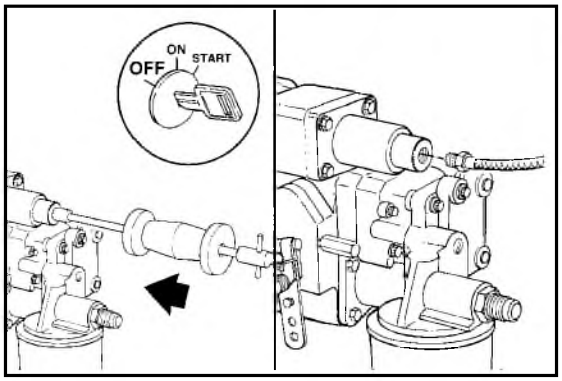

5. Stop the engine.
6. Install the expansion plug in the cover.
7. Install the air tube to the cover.

Power Check On Dynamometer

1. Make sure the same Control Parts List (CPL) number is on the fuel pump and the engine dataplate.

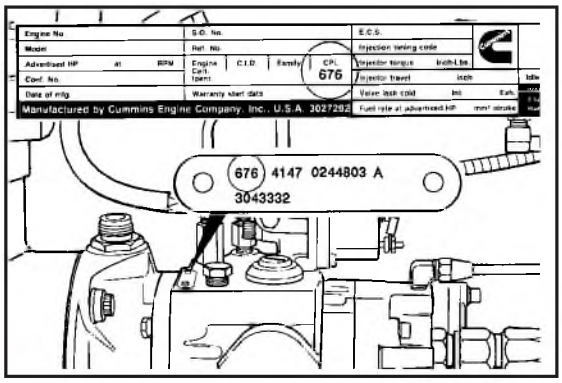

2. Find the fuel pump calibration code number on the fuel pump dataplate and in the Fuel Pump Calibration Values Manual, Bulletin No. 3379352-01.

NOTE: The ambient air temperature **must** be 10°-38°C [50° to 100°F].

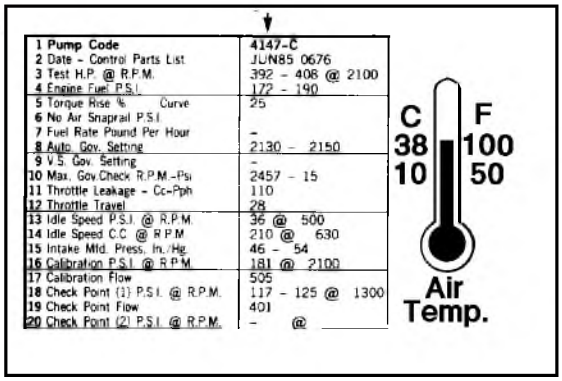

1 Pump Code	4147-C
2 Date - Control Parts List	JUN85 0676
3 Test H.P. @ R.P.M.	392 - 408 @ 2100
4 Engine Fuel P.S.I.	172 - 190
5 Torque Rise % Curve	25
6 No Air Snaprail P.S.I.	
7 Fuel Rate Pound Per Hour	-
8 Auto. Gov. Setting	2130 - 2150
9 V.S. Gov. Setting	-
10 Max. Gov.Check R.P.M.-Psi	2457 - 15
11 Throttle Leakage - Cc-Pph	110
12 Throttle Travel	28
13 Idle Speed P.S.I. @ R.P.M.	36 @ 500
14 Idle Speed C.C. @ R.P.M.	210 @ 630
15 Intake Mfd. Press. In./Hg.	46 - 54
16 Calibration P.S.I. @ R.P.M.	181 @ 2100
17 Calibration Flow	505
18 Check Point (1) P.S.I. @ R.P.M.	117 - 125 @ 1300
19 Check Point Flow	401
20 Check Point (2) P.S.I. @ R.P.M.	- @

3. Record the following specifications from the fuel pump code:

   a. Engine horsepower at rated speed, line No. 3.
   b. Engine fuel kPa [psi] (pressure), line No. 4.
   c. Fuel rate (flow) pounds per hour, line No. 7.
   d. Intake manifold pressure mm Hg [in/Hg.] (Boost), line No. 14.
   e. AFC no air kPa [psi], line No. 40.

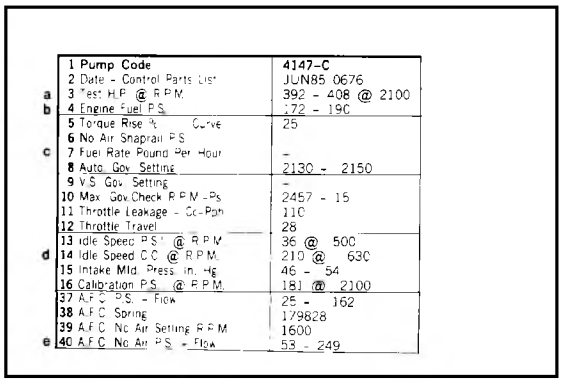

	1 Pump Code	4147-C
	2 Date - Control Parts List	JUN85 0676
a	3 Test H.P. @ R.P.M.	392 - 408 @ 2100
b	4 Engine Fuel P.S.	172 - 190
	5 Torque Rise % Curve	25
	6 No Air Snaprail P.S.	
c	7 Fuel Rate Pound Per Hour	-
	8 Auto. Gov. Setting	2130 - 2150
	9 V.S. Gov. Setting	-
	10 Max. Gov.Check R.P.M.-Ps	2457 - 15
	11 Throttle Leakage - Cc-Pph	110
	12 Throttle Travel	28
	13 Idle Speed P.S.I. @ R.P.M.	36 @ 500
d	14 Idle Speed C.C. @ R.P.M.	210 @ 630
	15 Intake Mfd. Press. In. Hg	46 - 54
	16 Calibration P.S. @ R.P.M.	181 @ 2100
	37 A.F.C. P.S. - Flow	25 - 162
	38 A.F.C. Spring	179828
	39 A.F.C. No Air Setting R.P.M.	1600
e	40 A.F.C. No Air P.S. - Flow	53 - 249

4. If additional engine data is required, refer to the engine data sheet, available from a Cummins authorized service location. For vehicles with converters, the stall speed and time are available from the equipment manufacturer.

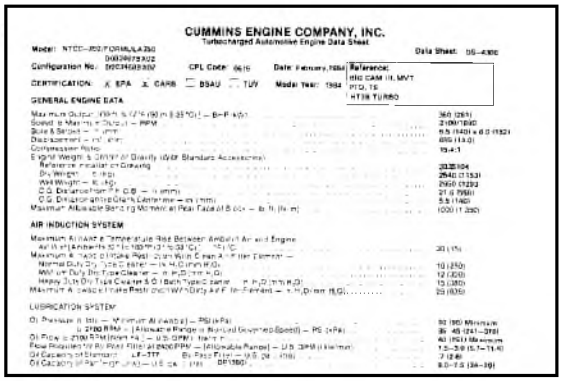

CUMMINS ENGINE COMPANY, INC.
Turbocharged Automotive Engine Data Sheet

Model: NTC-400 FORMULA 250
Configuration No.: 3000473302
CPL Code: 0616
Date: February, 1984
Data Sheet: 05-4300
Reference: RIG CAM II, MVT, PTO, TE, HT38 TURBO
CERTIFICATION: X EPA X CARB BSAU TUV
Model Year: 1984

GENERAL ENGINE DATA
Maximum Output (Bhp & KW) @ 2100 RPM & 25°C (77°F) — B-P (kW) 360 (251)
Speed @ Maximum Output — RPM 2100 (100)
Bore & Stroke — in. (mm) 5.5 (140) x 6.0 (152)
Displacement — in³ (cm³) 855 (14.0)
Compression Ratio 15.4:1
Engine Weight & Center of Gravity (Dry Standard Accessories)
Reference Installation Drawing 3035104
Dry Weight — lb (kg) 2640 (1197)
Wet Weight — lb (kg) 2660 (1206)
C.G. Distance from F.F. C.B. — in (mm) 21.6 (549)
C.G. Distance of the C.G. from Centerline — in (mm) 5.5 (140)
Maximum Allowable Bending Moment at Rear Face of Block — lb ft (N·m) 1000 (1 356)

AIR INDUCTION SYSTEM
Maximum Allowable Temperature Rise Between Ambient Air and Engine Air Inlet (Ambients 10°F to 100°F) (-12°C to 38°C) 20 (11)
Maximum Allowable Intake Restriction With Clean Air Filter Element —
Normal Duty Dry Type Cleaner — in. H2O (mm H2O) 10 (250)
Severe Duty Dry Type Cleaner — in. H2O (mm H2O) 12 (300)
Heavy Duty Dry Type Cleaner 5.0 Inch Type Cleaner — in. H2O (mm H2O) 15 (380)
Maximum Allowable Intake Restriction With Severe Duty Air Filter Element — in. H2O (mm H2O) 25 (635)

LUBRICATION SYSTEM
Oil Pressure (Psi) — Minimum Allowable — PSI (kPa) 30 (90) Minimum
@ 2100 RPM — (Allowable Range is Non-Load Governed Speed) — PS (kPa) 35 - 45 (241 - 310)
Oil Flow @ 2100 RPM (Item 14) — U.S. GPM (liters/min) 40 (151) Minimum
Flow Required for Oil Reel Filter at 2100 RPM — (Allowable Range) — U.S. GPM (liters/min) 1.5 - 3.0 (5.7 - 11.4)
Oil Capacity of Sump — Lt — ITT Oil Reel Filter — U.S. Qt. (Lt) 7 (6.6)
Oil Capacity of Pan — Qt. (Lt.) — U.S. Qt. (Lt) — DP1360 8.0 - 7.5 (34 - 39)

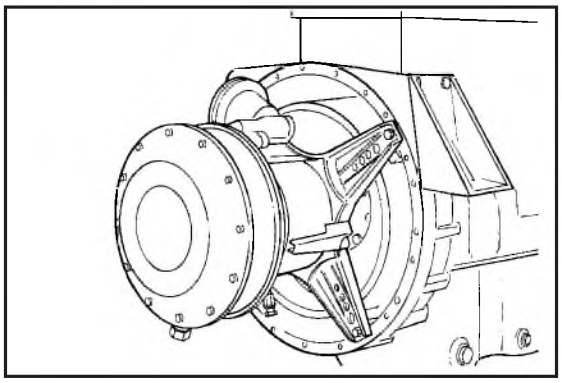

Power Check Equipment Installation

1. Install the engine or unit on an engine dynamometer, chassis dynamometer, or use Part No. 3375710 Drive Line Dynamometer.

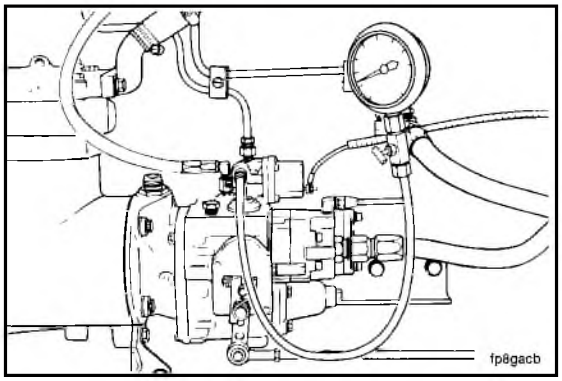

2. Remove the plug from the fuel pump shutoff valve.
   a. Install service tool Part No. ST-435 Pressure Gauge or
   b. The pressure gauge in the fuel measuring device, Part No. 3376375, to the shutoff valve.

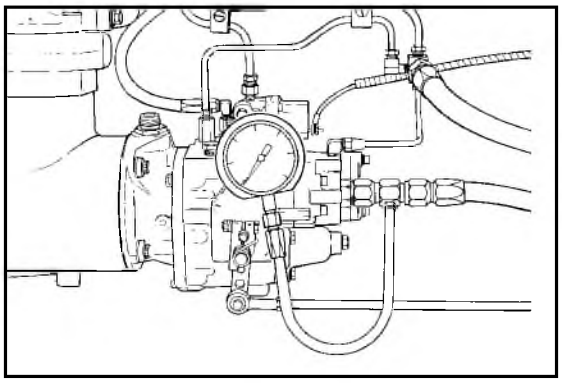

3. Install the vacuum gauge, Part No. ST-434, in the gear pump inlet line.

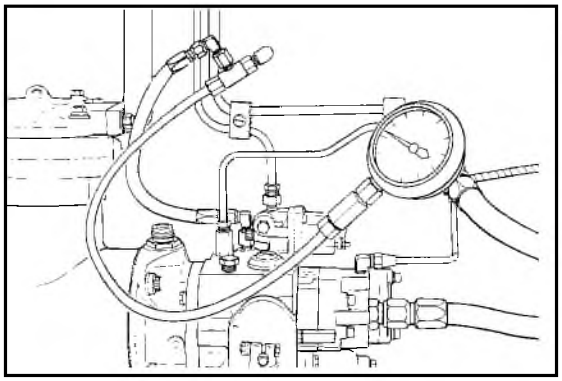

4. Install the pressure gauge, Part No. ST-1273, in the air compressor air inlet line to measure the turbocharger output pressure.

5. Install the digital tachometer, Part No. 3375631, or equivalent, to the fuel pump tachometer drive.

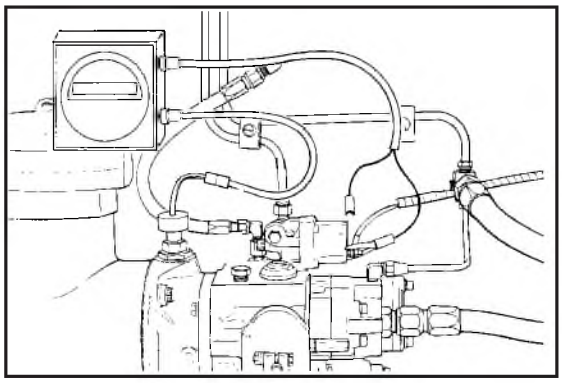

6. Install the fuel measuring device, Part No. 3376375, to the engine.

   a. The fuel return line from the engine to the fuel measuring device.
   b. The fuel inlet line to the fuel filter inlet.
   c. The return line from the device to the tank.
   d. The fuel inlet line to the device from the tank suction line.

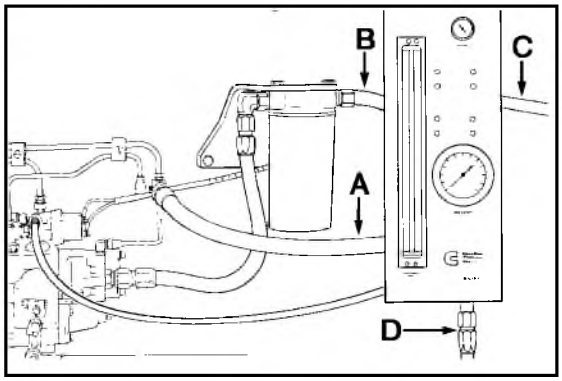

Power Check Operation

1. Operate the engine at full throttle with no load to remove the air from the fuel system.

NOTE: For non-automotive applications, refer to the stall speed, Procedure 5-19.

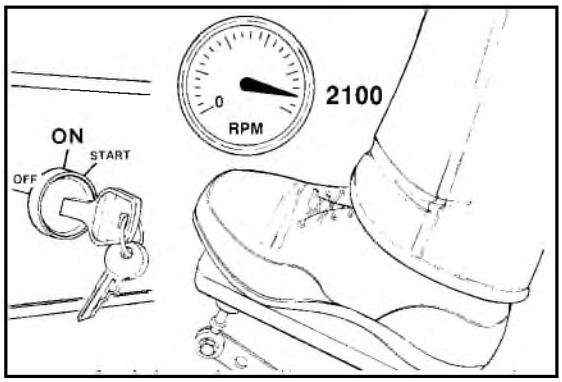

2. When the air is out of the system, the flow meter in the fuel measuring device will **not** show any air bubbles.

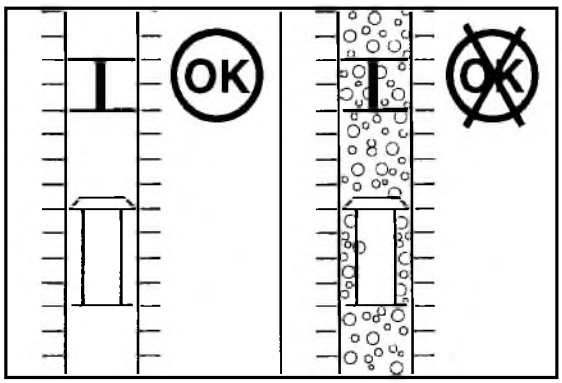

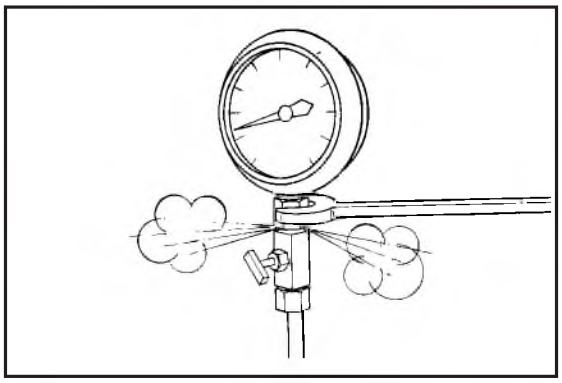

a. Remove the air from the fuel pressure gauge.

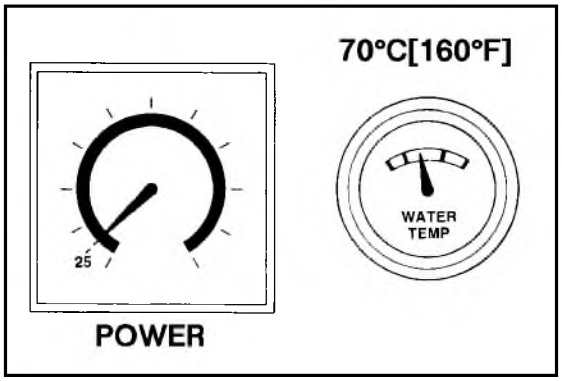

3. Operate the engine until it is at or above 70°C [160°F] by applying a light load on the dynamometer.

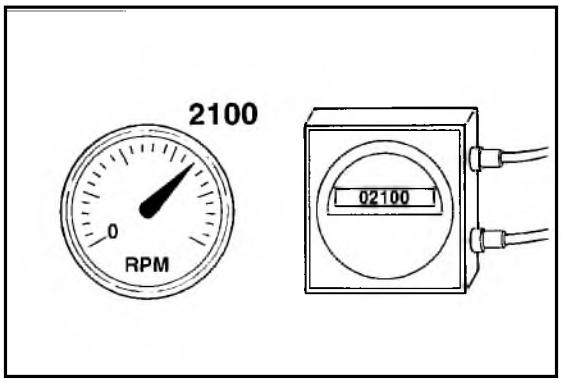

4. Check the accuracy of the vehicle tachometer with the digital tachometer.

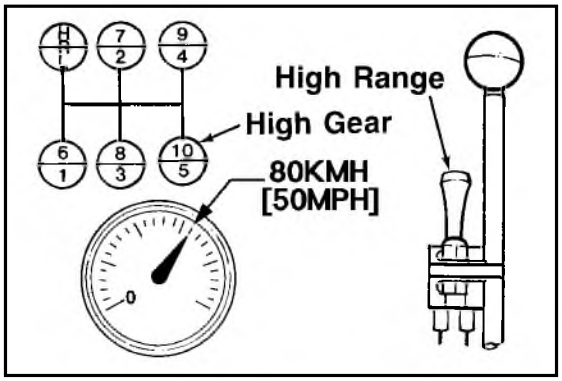

5. When testing a chassis dynamometer or Part No. 3375710 Drive Line Dynamometer, operate the unit in the top gear.

6. Operate the engine at full throttle. Increase the dynamometer load to reduce the engine RPM to the rated speed.

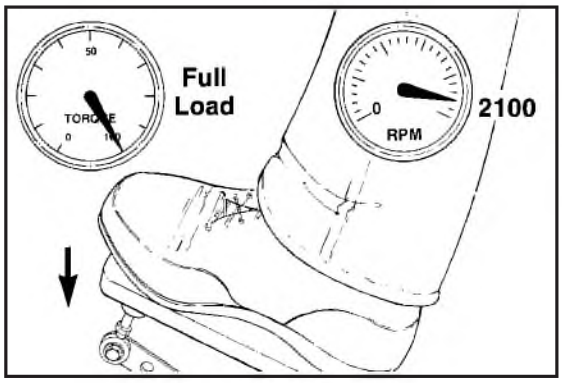

7. Record the following information:

   a. Rated speed
   b. Fuel rate in pounds per hour

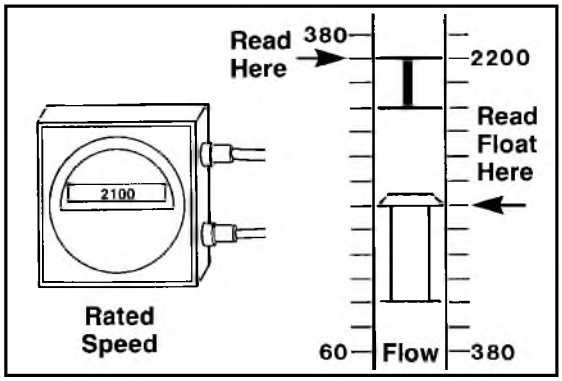

   c. Turbocharger pressure
   d. Engine fuel (rail) pressure
   e. Gear pump fuel inlet restriction

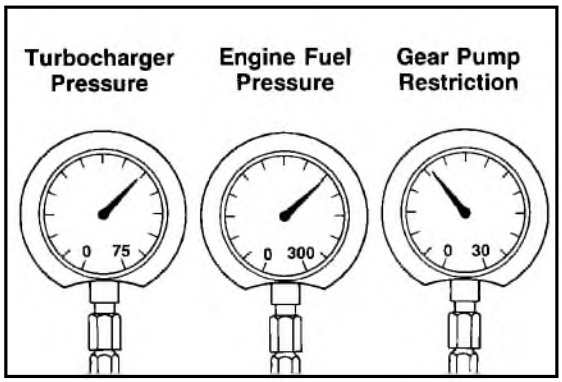

NOTE: The maximum fuel (rail) pressure and turbocharger pressure **must** occur at rated speed.

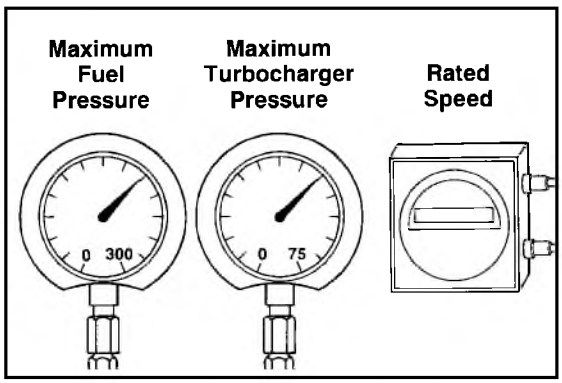

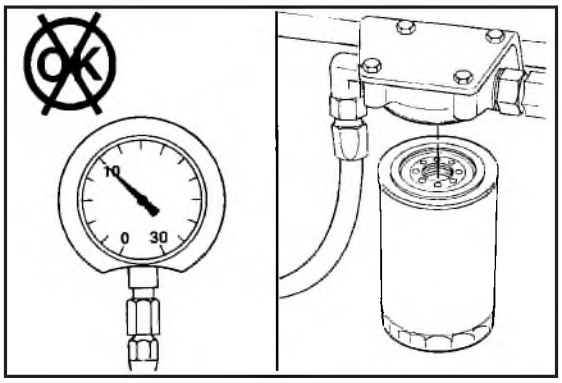

8. If the gear pump fuel inlet restriction is high, replace the fuel filter. Refer to Procedures 5-08 and 5-15.

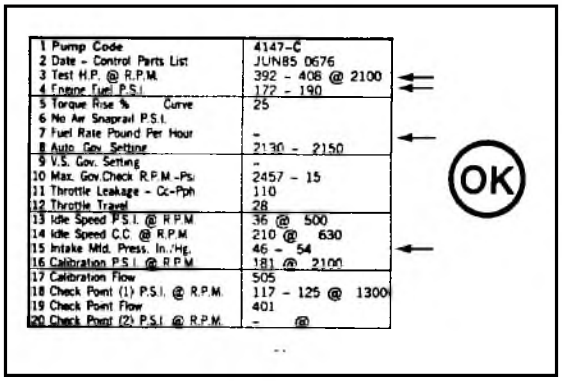

1 Pump Code	4147-C
2 Date - Control Parts List	JUN85 0676
3 Test H.P. @ R.P.M.	392 - 408 @ 2100
4 Engine Fuel P.S.I.	172 - 190
5 Torque Rise % Curve	25
6 No Air Snapraul P.S.I.	
7 Fuel Rate Pound Per Hour	-
8 Auto. Gov. Setting	2130 - 2150
9 V.S. Gov. Setting	-
10 Max. Gov.Check R.P.M.-Psi	2457 - 15
11 Throttle Leakage - Cc-Pph	110
12 Throttle Travel	28
13 Idle Speed P.S.I. @ R.P.M.	36 @ 500
14 Idle Speed C.C. @ R.P.M.	210 @ 630
15 Intake Mfd. Press. In./Hg.	46 - 54
16 Calibration P.S.I. @ R.P.M.	181 @ 2100
17 Calibration Flow	505
18 Check Point (1) P.S.I. @ R.P.M.	117 - 125 @ 1300
19 Check Point Flow	401
20 Check Point (2) P.S.I. @ R.P.M.	- @

9. If all of the values are within the specifications, the engine is producing the correct horsepower.

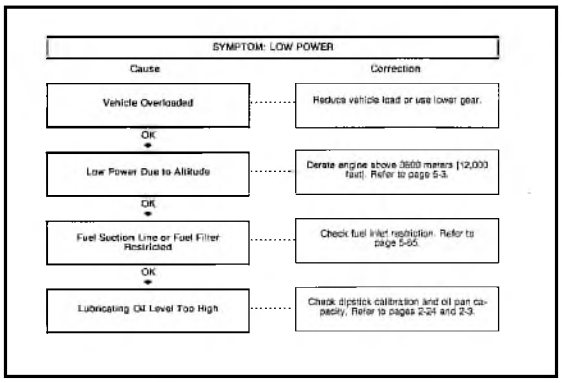

SYMPTOM: LOW POWER	
Cause	Correction
Vehicle Overloaded	Reduce vehicle load or use lower gear.
OK	
Low Power Due to Altitude	Derate engine above 3600 meters [12,000 feet]. Refer to page 5-3.
OK	
Fuel Suction Line or Fuel Filter Restricted	Check fuel inlet restriction. Refer to page 5-05.
OK	
Lubricating Oil Level Too High	Check dipstick calibration and oil pan capacity. Refer to pages 2-24 and 2-3.

10. If the values are **not** within the specifications, refer to the Low Power Troubleshooting Charts.

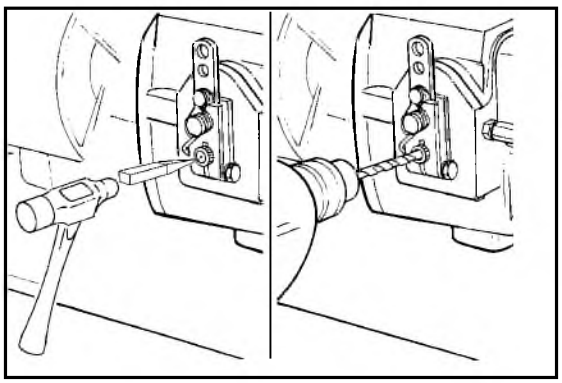

Fuel Rate - Adjust

1. To raise or lower the engine fuel rate, remove the ball from the end of the throttle shaft.

   a. Use a center punch to mark the ball.
   b. Drill a 4 mm [0.1875 inch] (3/16 inch) hole in the ball.

2. Use an ''easy out extractor'' or a ''slide hammer'' to remove the ball.

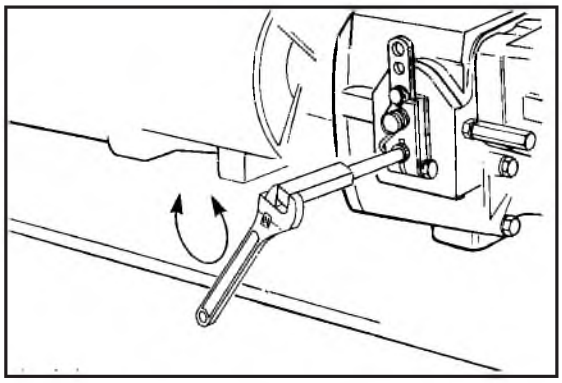

3. Adjust the throttle shaft plunger screw to raise or lower the fuel rate.

   a. Turn the screw in (**clockwise**) to lower the fuel rate.
   b. Turn the screw out to raise the fuel rate.

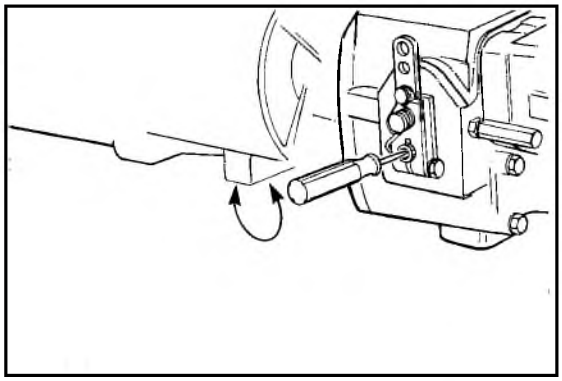

Caution: Do not turn the plunger out closer than 6 mm [0.250 inch] (1/4 inch) from the end of the shaft. The fuel pressure can push the plunger out of the shaft. Spilled fuel is a fuel hazard.

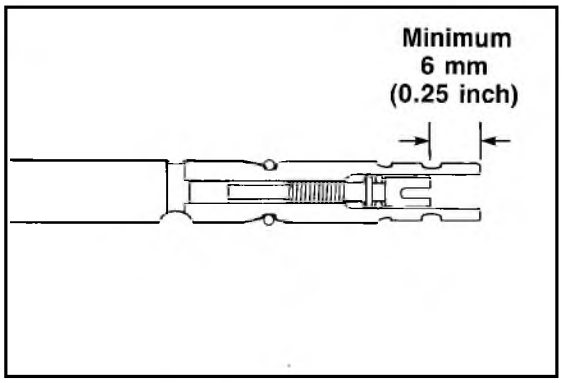

4. If the maximum flow (1) the fuel pump can be adjusted to is below the correct value (2), replace the fuel pump.

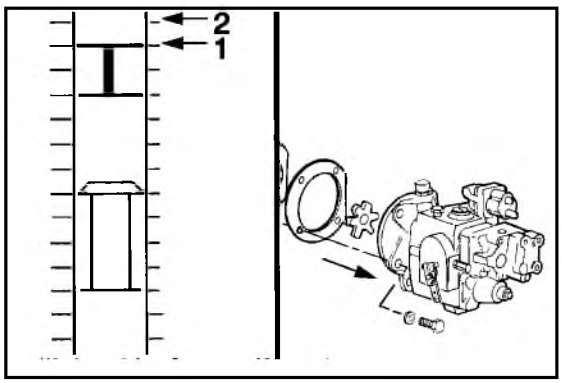

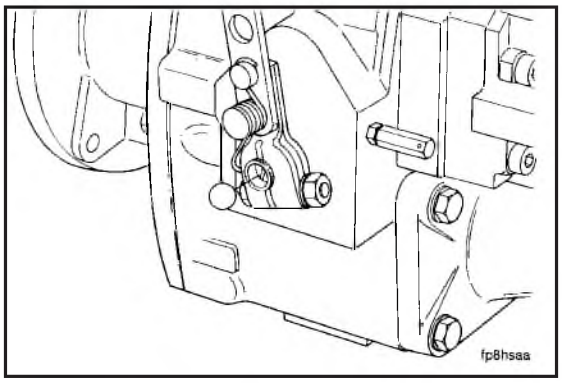

5. After the fuel rate is adjusted to the correct value, install a new ball in the end of the throttle shaft. This will help to prevent tampering.

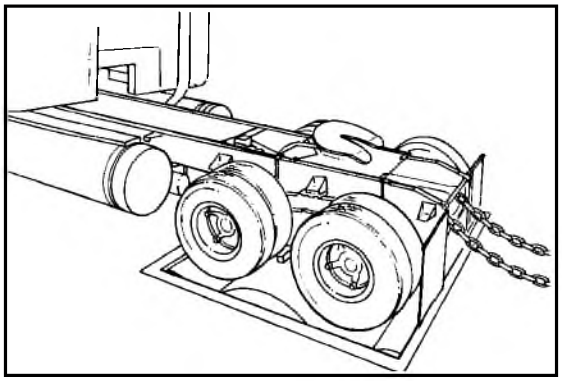

AFC No-Air Valve Setting

This adjustment **must** be made on:

- A chassis dynamometer,

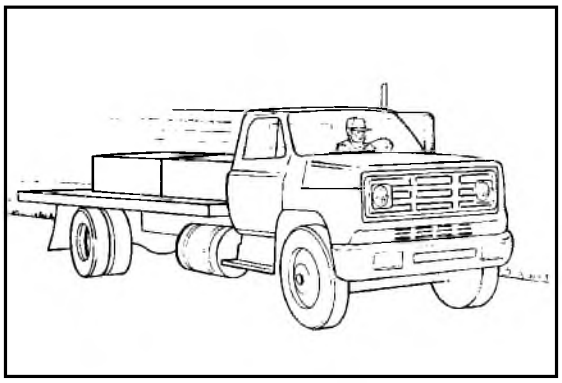

- Over the road or

- On off- road vehicles with an automatic transmission, use as a time to stall check.
  — Refer to Procedure 5-19.

1. Check the fuel pump code AFC no-air fuel (rail) pressure at 1600 RPM.

   a. The pressure on the engine **must** be within 48 kPa [7 psi] of the no-air pressure setting on the fuel pump test stand.
   b. The fuel pump test stand no-air values are listed in the Fuel Pump Calibration Values Manual, Bulletin No. 3379352-01, under the fuel pump code number.

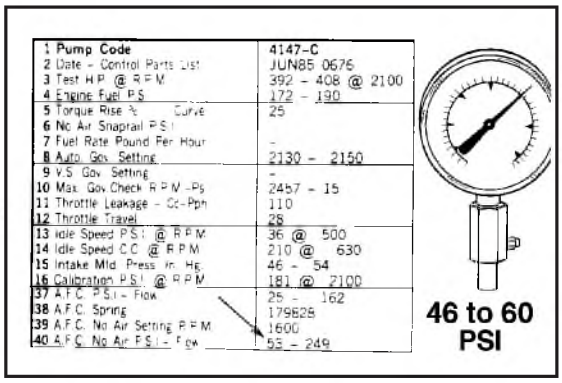

1 **Pump Code**	**4147-C**
2 Date - Control Parts List	JUN85 0676
3 Test H.P. @ R.P.M.	392 - 408 @ 2100
4 Engine Fuel P.S.	172 - 190
5 Torque Rise % Curve	25
6 No Air Snaprail P.S.I.	-
7 Fuel Rate Pound Per Hour	-
8 Auto. Gov. Setting	2130 - 2150
9 V.S. Gov. Setting	-
10 Max. Gov Check R.P.M.-Ps	2457 - 15
11 Throttle Leakage - Cc-Ppm	110
12 Throttle Travel	28
13 Idle Speed P.S.I. @ R.P.M.	36 @ 500
14 Idle Speed C.C. @ R.P.M.	210 @ 630
15 Intake Mfd. Press. in. Hg.	46 - 54
16 Calibration P.S.I. @ R.P.M.	181 @ 2100
37 A.F.C. P.S.I. - Flow	25 - 162
38 A.F.C. Spring	179828
39 A.F.C. No Air Setting R.P.M.	1600
40 A.F.C. No Air P.S.I. - Flow	53 - 249

2. Install a rail pressure gauge, Part No. ST-435, to the shutoff valve.

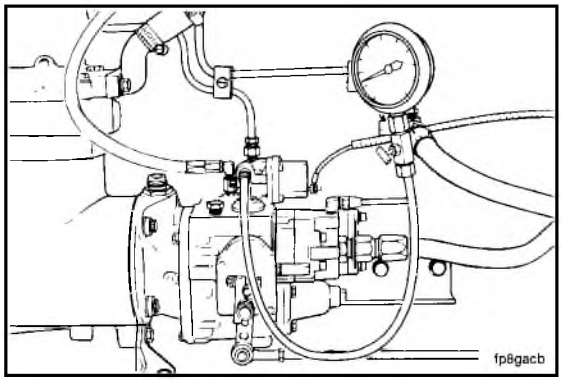

3. Install a tachometer, Part No. ST-774, 3375631, or 3377462.

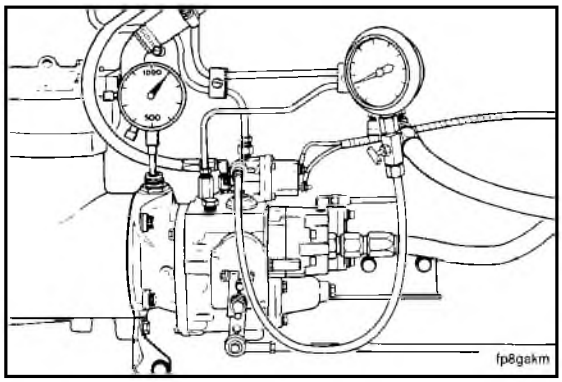

4. Remove the AFC air supply line from the air intake manifold or the compressor air tube. Install a plug or a cap in the air manifold hole.

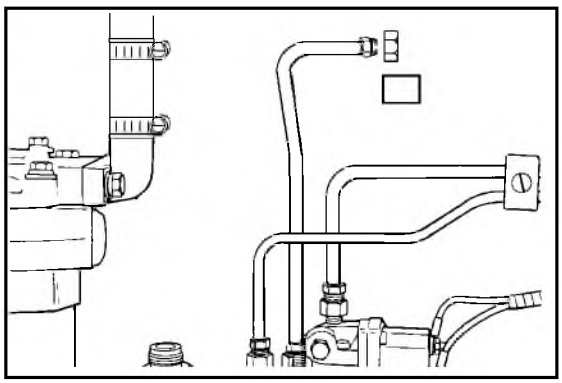

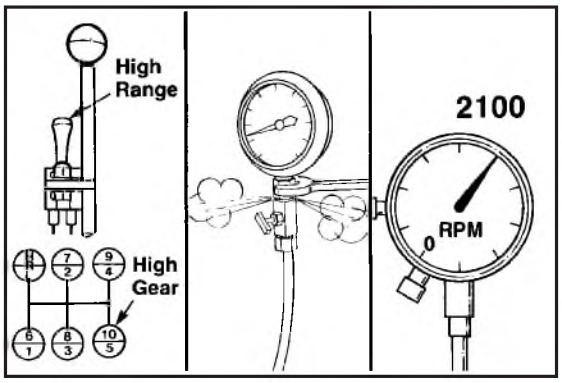

5. Operate the engine in the highest possible gear.
   a. Remove the air from the pressure gauge supply tube while the engine is warming to operating temperature.

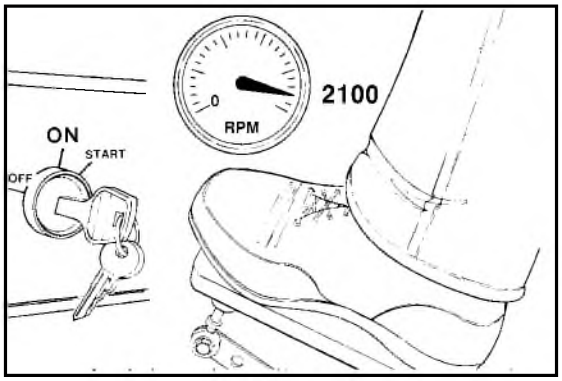

   b. Fully depress the accelerator or set the fuel pump throttle lever wide open.

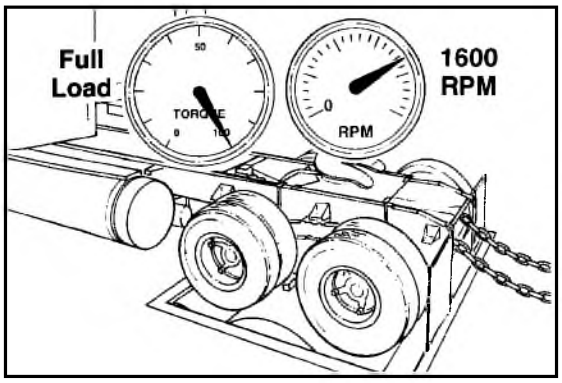

   c. On a chassis dynamometer, increase the load until the engine is at the specified (1600) RPM, or

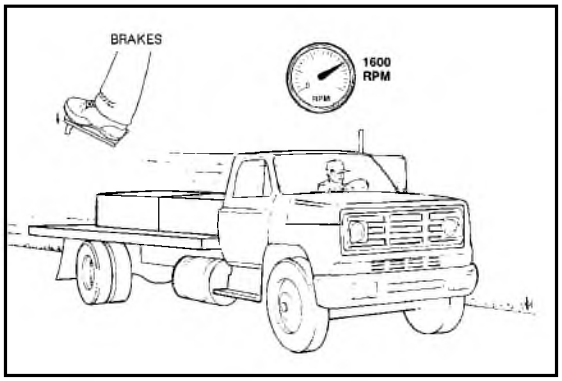

   d. On the road, drive the vehicle with the throttle full open. Apply the vehicle brakes to slow the vehicle to the specified (1600) RPM.

e. On off-road equipment, check the manufacturer's specifications for the time to accelerate to stall speed from idle. Refer to Procedure 5-19.

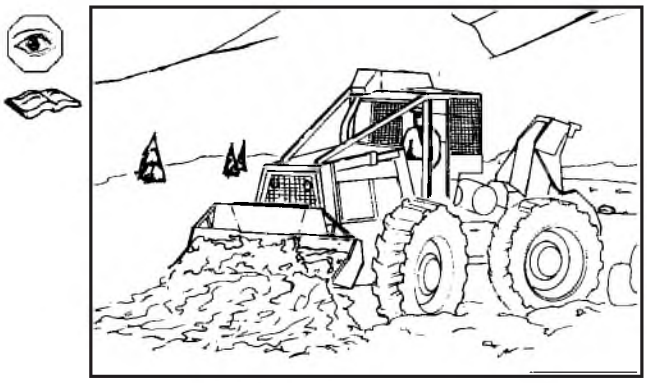

6. Check the AFC no-air rail pressure.

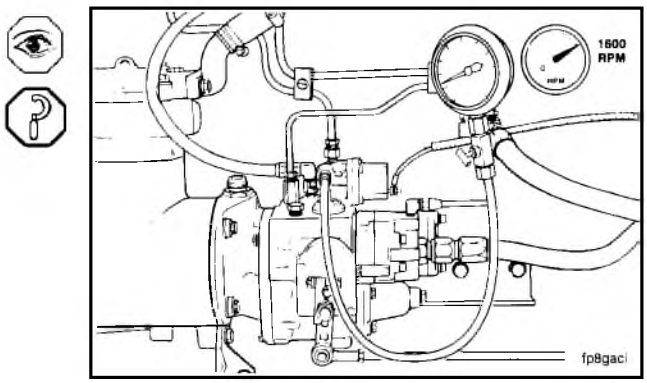

7. If the pressure is **not** within the specifications, remove the throttle lever from the fuel pump.
8. Remove the throttle cover plate.
9. Install the throttle lever.

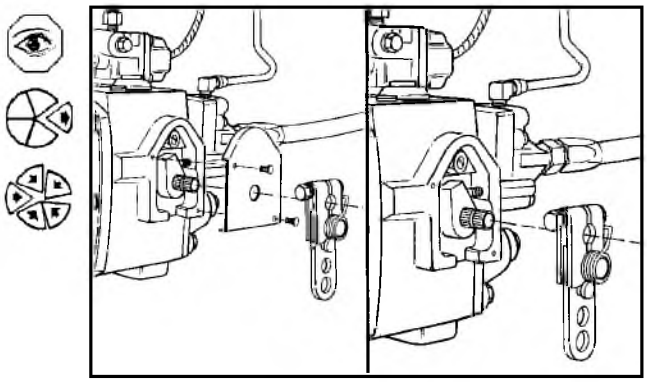

10. Adjust the AFC no-air valve to the correct pressure with the AFC no air adjustment tool, Part No. 3375140.

NOTE: Turn the knurled knob **clockwise** to lower the pressure.

11. Tighten the lock nut on the AFC no-air valve to 3.4 to 5.1 N•m [30 to 45 in. lb.] torque.

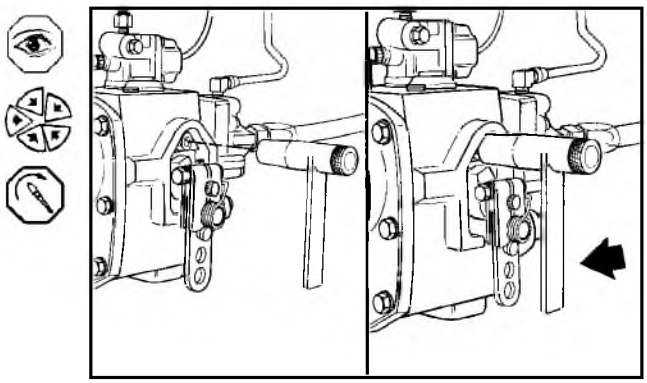

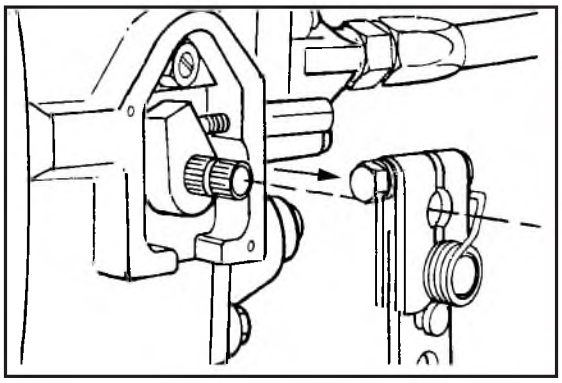

a. Test the engine. Do **not** exceed the maximum specification.
b. Remove the throttle lever.

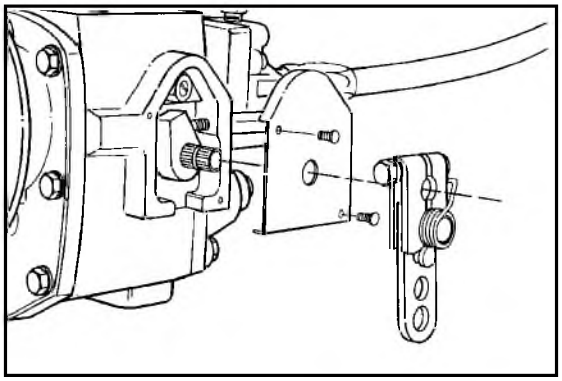

12. Install the throttle shaft cover plate and the throttle lever.

1 Pump Code	4147-C
2 Date - Control Parts List	JUN85 0676
3 Test H.P. @ R.P.M.	392 - 408 @ 2100
4 Engine Fuel P.S.	172 - 190
5 Torque Rise % Curve	25
6 No Air Snapram P.S.:	
7 Fuel Rate Pound Per Hour	-
8 Auto. Gov. Setting	2130 - 2150
9 V.S. Gov. Setting	-
10 Max. Gov. Check R.P.M.-Ps	2457 - 15
11 Throttle Leakage - Cc-Pph	110
12 Throttle Travel	28
13 Idle Speed P.S.I. @ R.P.M.	36 @ 500
14 Idle Speed C.C. @ R.P.M.	210 @ 630
15 Intake Mfd. Press. In. Hg	46 - 54
16 Calibration P.S.I. @ R.P.M.	181 @ 2100
37 A.F.C. P.S.I. - Flow	25 - 162
38 A.F.C. Spring	179828
39 A.F.C. No Air Setting R.P.M.	1600
40 A.F.C. No Air P.S.I. - Flow	53 - 249

Caution: It is illegal to adjust the fuel pump greater than the given specifications in the Fuel Pump Calibration Manual, Bulletin No. 3379352-01.

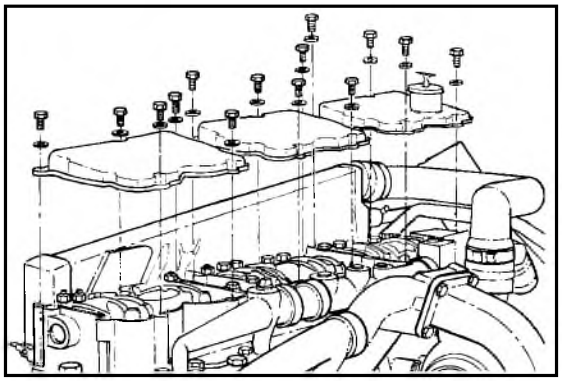

Injectors - Replace (5-06)

Remove

To clean and calibrate the injectors, remove them from the engine. The injectors **must** be calibrated on an injector test stand. Refer to the Injector Rebuild Manual, Bulletin No. 3379071, for the rebuild and calibration procedures.

1. Remove the rocker lever cover assembly. Refer to Procedure 7-02.

2. Loosen the adjusting screw lock nut on each injector rocker lever.
3. Turn out the adjusting screw on each injector rocker lever.

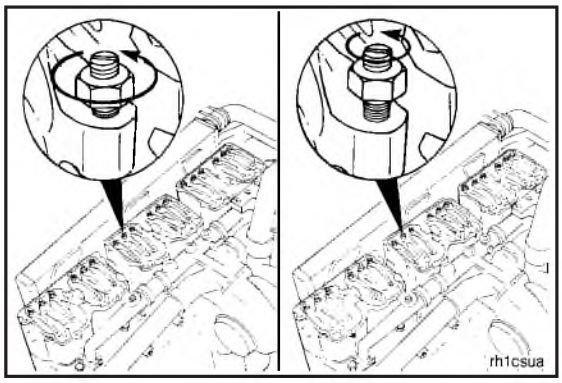

4. Move the injector push rod to the side. Refer to Procedure 7-08.

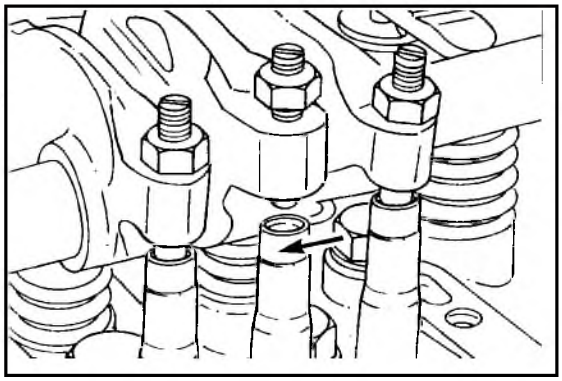

5. Rotate the rocker lever up on each cylinder.
6. Remove the injector link.
7. Remove the two clamp capscrews and the injector hold down clamp.

Caution: Do not drop or damage the injector plunger.

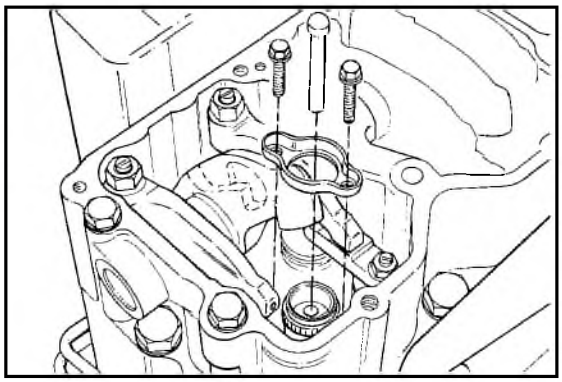

8. Use Part No. 3376497 Injector Puller to remove the injectors.
   a. Take the injectors to a Cummins authorized repair location.

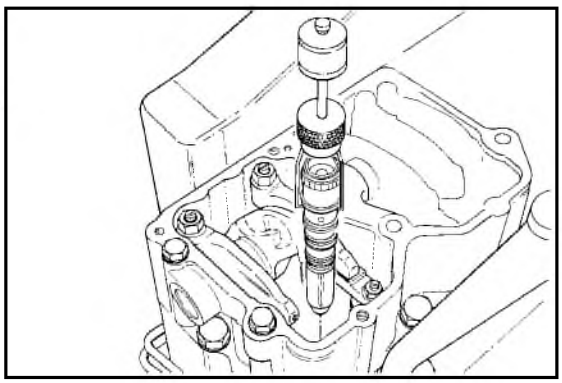

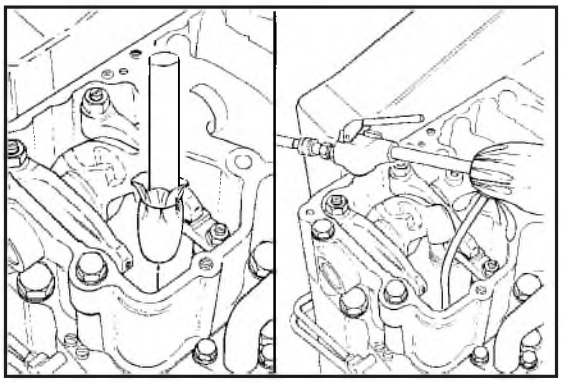

9. Use a clean wooden stick with a clean cloth wrapped around the end to remove all of the carbon from the injector copper sleeves in the cylinder head.

Caution: Do not use anything metal to scrape the injector copper sleeves.

NOTE: Use ST-1272-11 Chip Removing Unit to remove the carbon from the top of the piston.

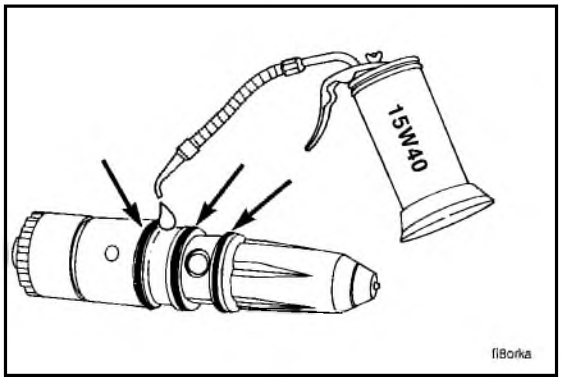

Install

1. Inspect the three o-rings on each injector for damage.
2. Lubricate the o-rings with lubricating oil just before installation.

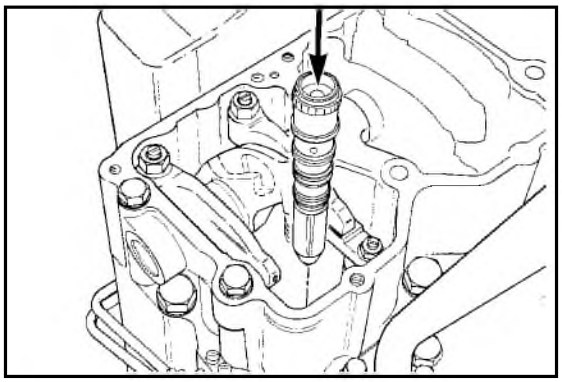

3. Install the injector in the cylinder head injector bore.

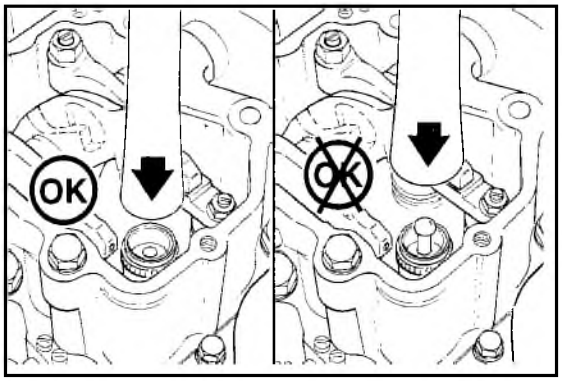

4. Use a clean, blunt instrument to seat the injector in the bore.

Caution: Be sure to place the instrument on the body of the injector, not on the plunger or link.

a. A ''snap'' will be heard and felt as the injector is seated.

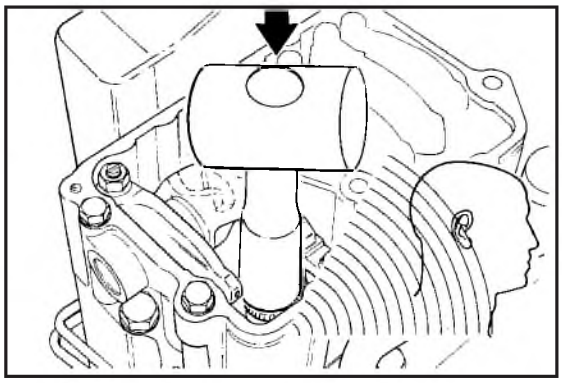

5. Install the hold down clamp and capscrews over the injector body.

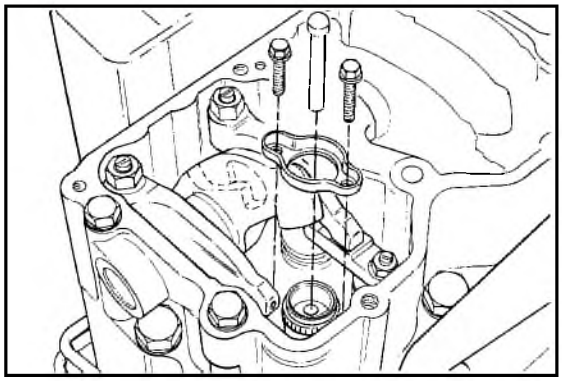

6. Tighten the capscrews alternately and evenly, 6 N•m [50 in-lb] torque one at a time, to a final torque of 16 to 19 N•m [144 to 168 in-lb].

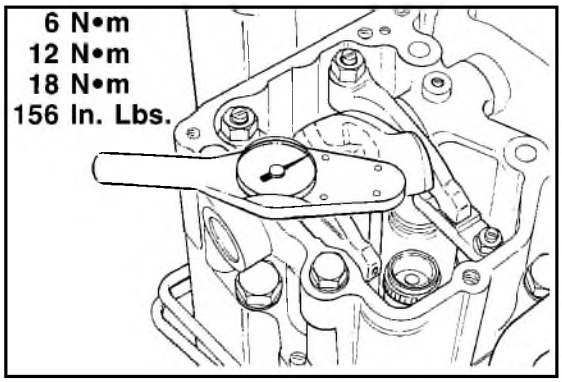

7. Install the injector link in each injector.
8. Align the push rod with the injector rocker lever.

Caution: Do not drop the push rods.

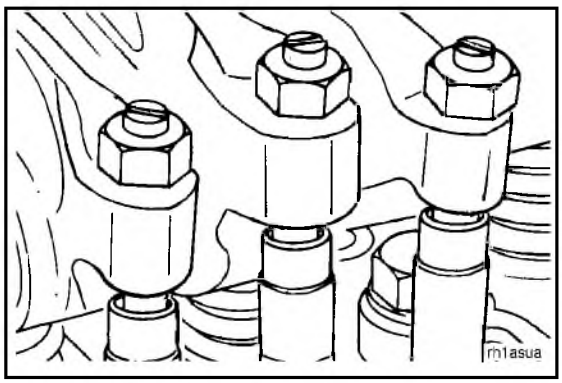

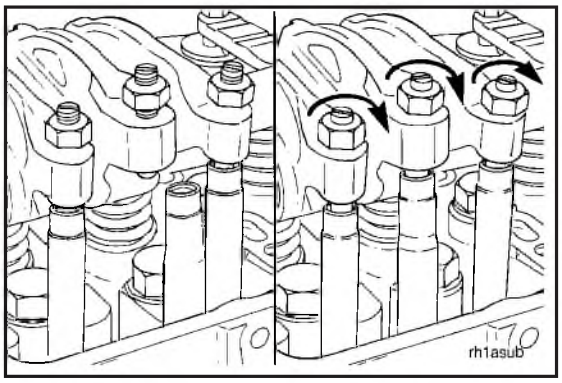

9. Turn the adjusting screw for the injector rocker lever in until it is properly seated in the push rod socket.
10. Adjust all crossheads, valves, and injectors. Refer to Procedure 7-04.

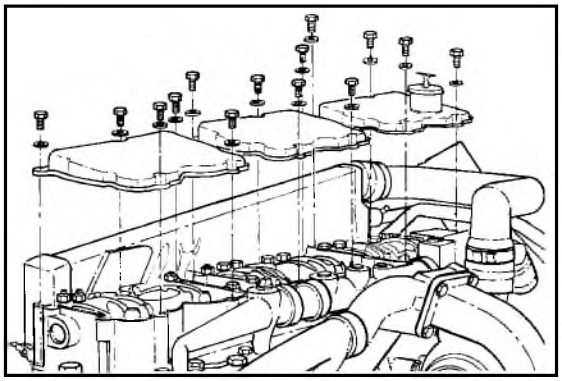

11. Install the rocker lever cover. Refer to Procedure 7-02.

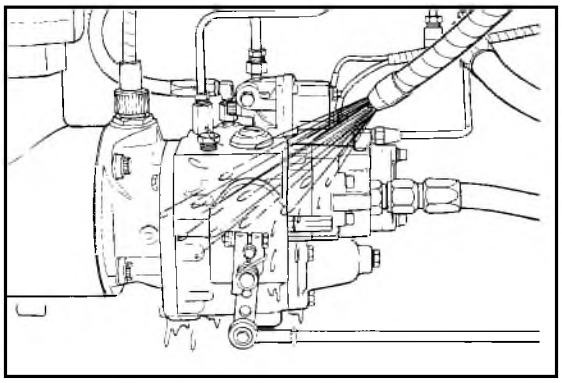

Fuel Pump - Replace (5-07)

Remove

1. Clean the fuel pump and the surrounding area before removing it from the engine.

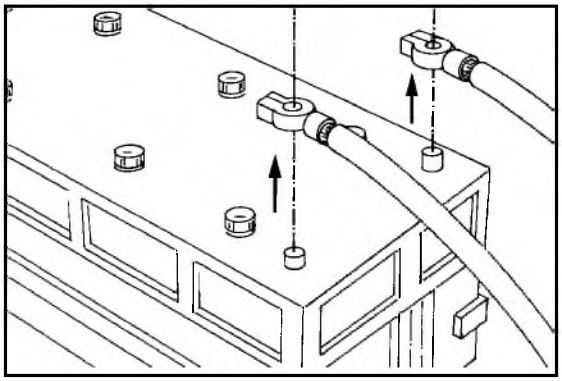

2. Disconnect the battery cables.

3. Remove the wire to the fuel shutoff valve.
4. Remove the linkage from the throttle lever.

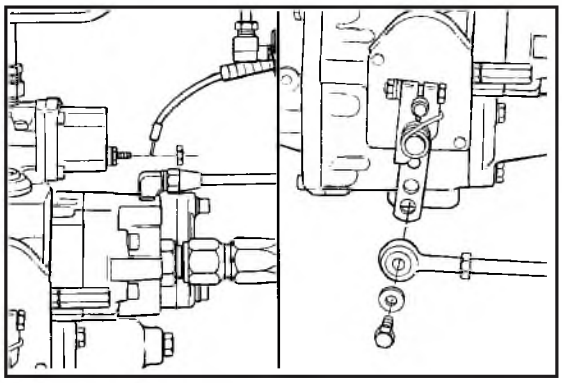

5. Remove the fuel tubing and air hose.
   - Fuel drain from the cylinder head (1).
   - Gear pump cooling drain (2).
   - Gear pump suction line (3).
   - AFC fuel drain (4).
   - Fuel supply to the injectors (5).
   - AFC air supply hose (6).
   - Tachometer cable (7).

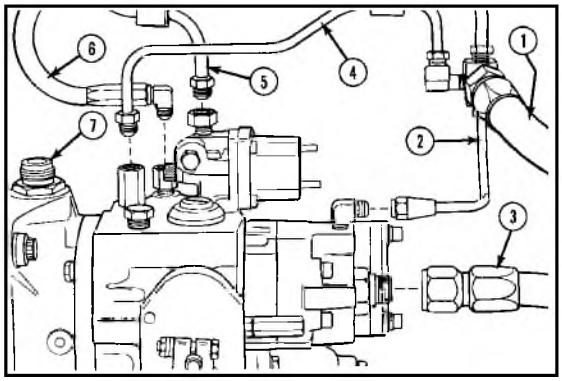

6. Remove the four capscrews and the fuel pump.

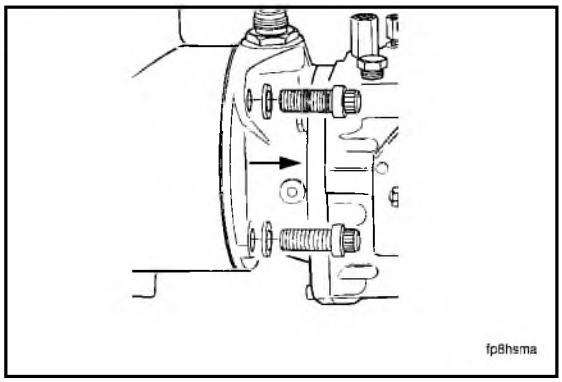

Clean And Inspect

1. Clean the gasket surface of the fuel pump and the air compressor or accessory drive.
2. Inspect the surfaces for damage.

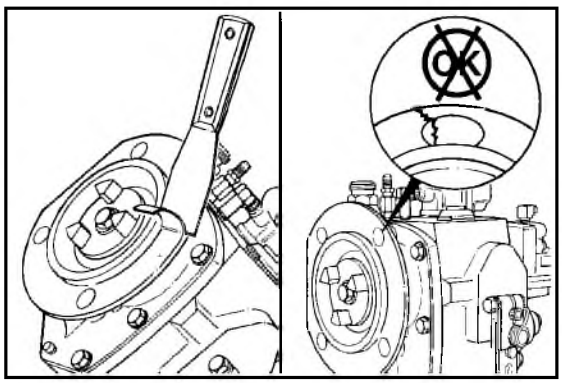

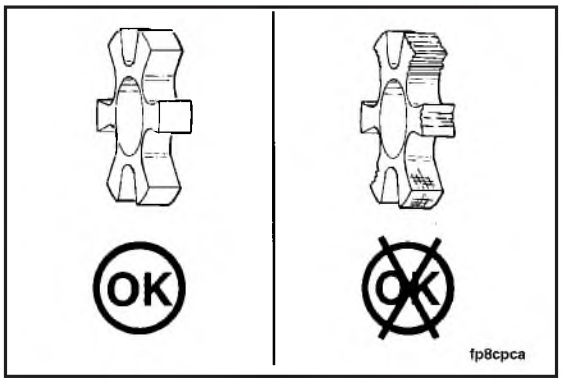

3. Visually inspect the spider coupling for damage.

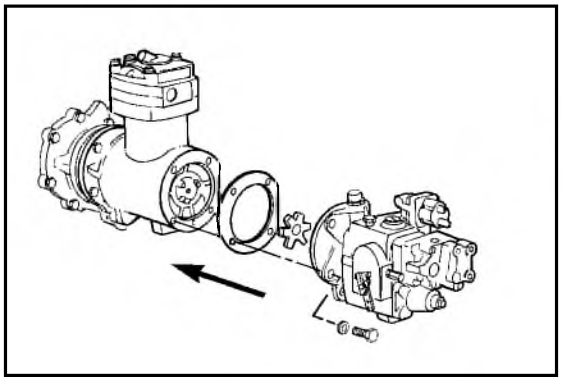

Install The Fuel Pump To The Air Compressor

1. Install the fuel pump drive spider coupling.
2. Use a new gasket to install the fuel pump.

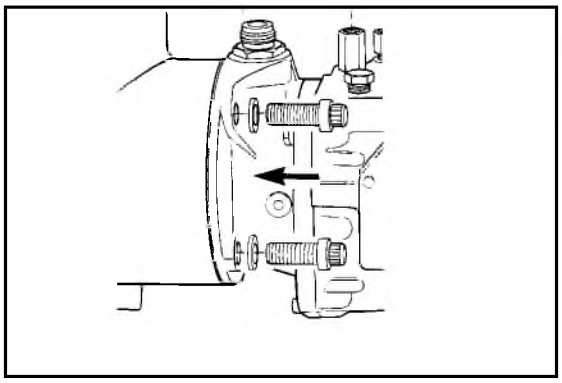

3. Install the fuel pump mounting capscrews. Tighten the mounting capscrews to 45 N•m [35 ft-lb] torque.

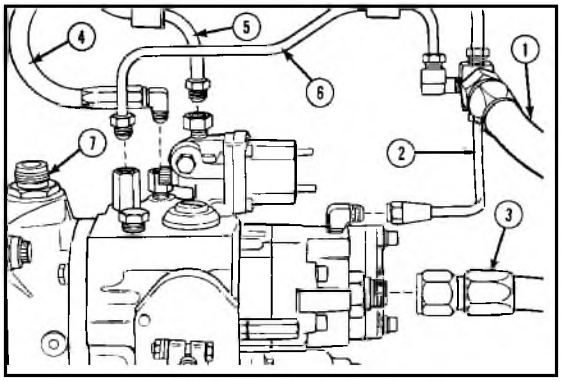

4. Install the AFC air tube and fuel tubing.
   - Fuel drain from the cylinder head (1).
   - Gear pump cooling drain (2).
   - Gear pump suction line (3).
   - AFC fuel drain (6).
   - Fuel supply to the injectors (5).
   - AFC air supply hose (4).
   - Tachometer cable (7).

5. Install the electric wire to the fuel shutoff valve.

NOTE: The wire connection nut and the ground post nut **must** be clean and tight.

6. Install the linkage to the throttle lever.

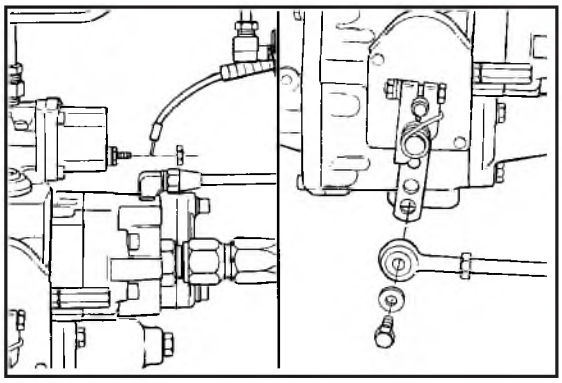

7. Install the battery cables.
8. Test the engine and check for leaks.

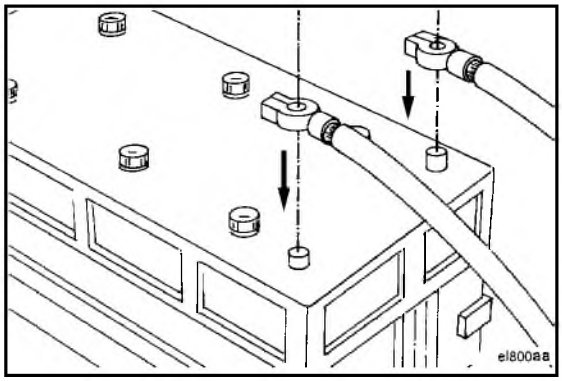

Install The Fuel Pump On The Accessory Drive

1. Install the fuel pump drive spline coupling.

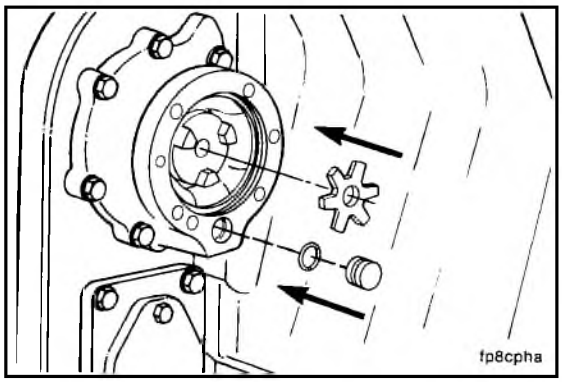

2. Use a new gasket to install the fuel pump.
3. Install the mounting capscrews to the accessory drive. Tighten the capscrews to 45 N•m [35 ft-lb] torque.

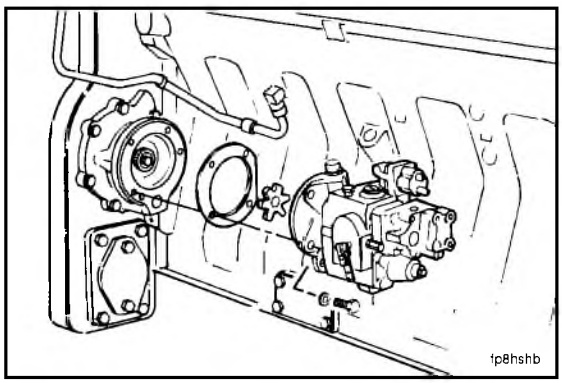

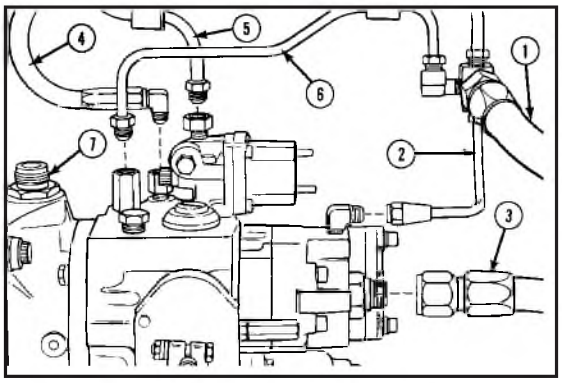

4. Install the AFC air tube and fuel tubing.
   - Fuel drain from the cylinder head (1).
   - Gear pump cooling drain (2).
   - Gear pump suction line (3).
   - AFC fuel drain (6).
   - Fuel supply to the injectors (5).
   - AFC air supply hose (4).
   - Tachometer cable (7).
   - Install shutoff valve wires.
   - Install throttle linkage.
5. Install the battery cables.
6. Operate the engine and check for leaks.

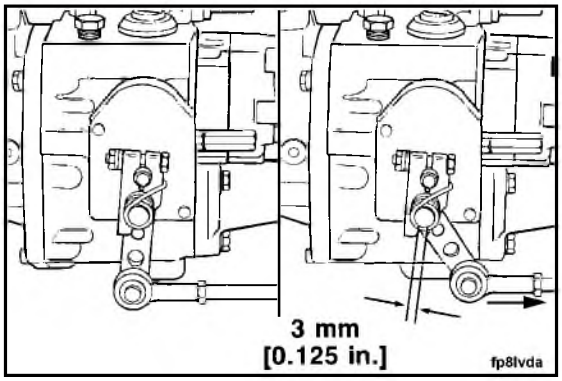

Throttle Lever Breakover - Check

1. Make sure the throttle linkage is adjusted so the throttle lever breaks over 3 to 6 mm [0.125 to 0.250 inch] (1/8 to 1/4 inch) when the lever is in the full throttle position.
2. The throttle lever stop **must** contact the rear throttle stop screw.

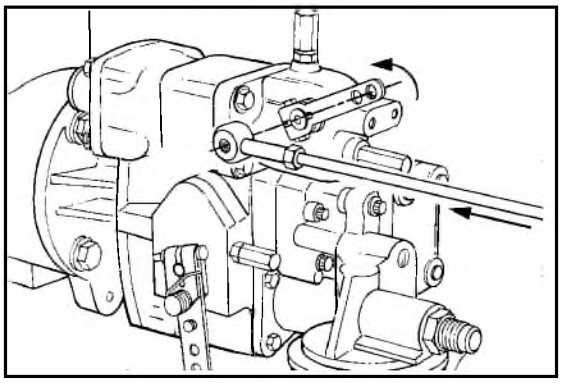

Variable Speed (VS) Throttle Linkage Adjustment

1. Remove the throttle linkage from the VS throttle lever.
2. Hold the VS lever in the idle position. Move the linkage to the idle position.

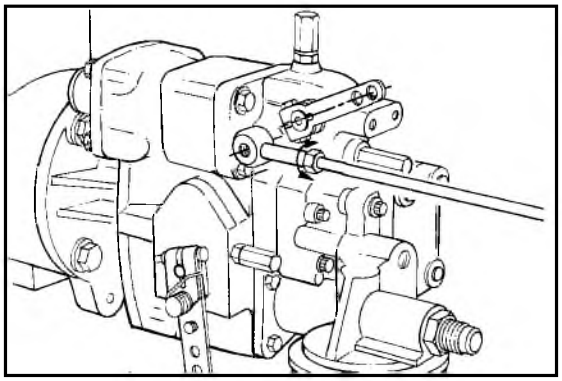

3. If the lever and the linkage are **not** aligned, adjust the linkage.

4. Move the VS lever and linkage to the maximum speed position.
5. If the lever and the linkage are **not** aligned, adjust the linkage.

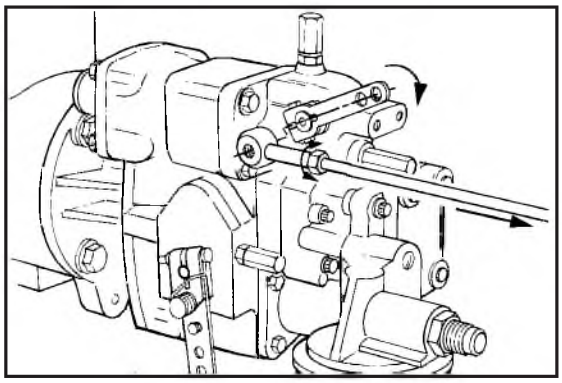

6. Install the linkage on the lever.

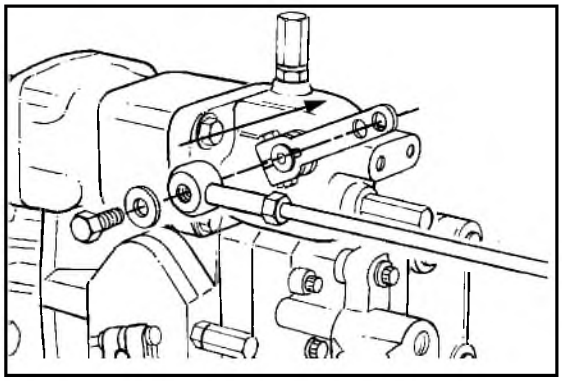

Fuel System Maintenance (5-08)

Fuel Filter - Replace

1. Remove the fuel filter with Part No. 3375049 Filter Wrench.

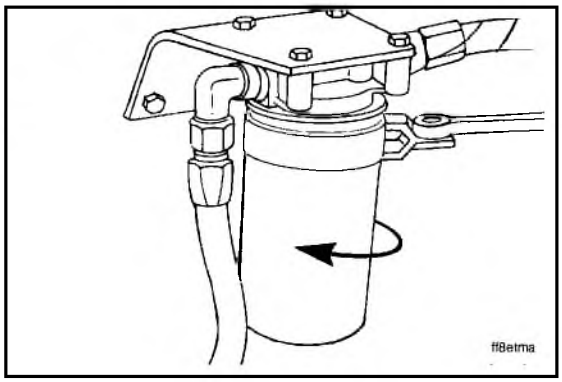

2. Use a clean, lint-free towel to clean the filter head gasket surface.

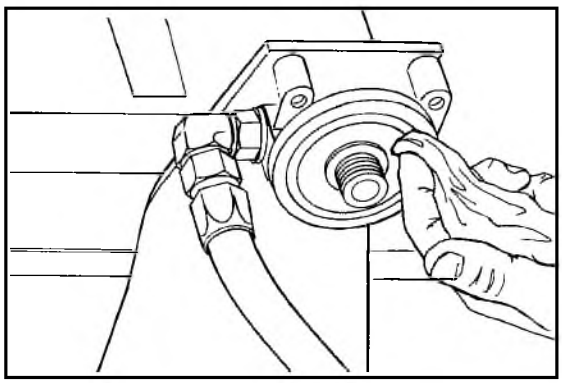

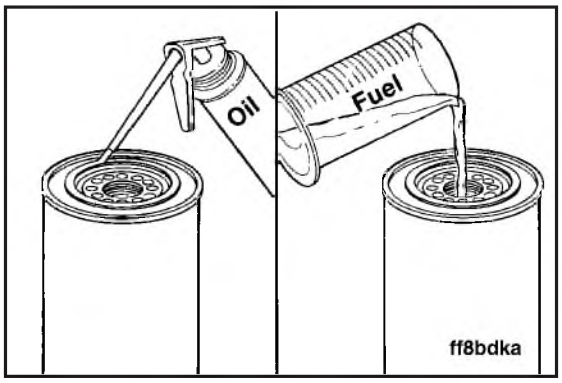

3. Apply a light film of clean engine oil to the filter gasket surface.
4. Fill the filter with clean fuel.

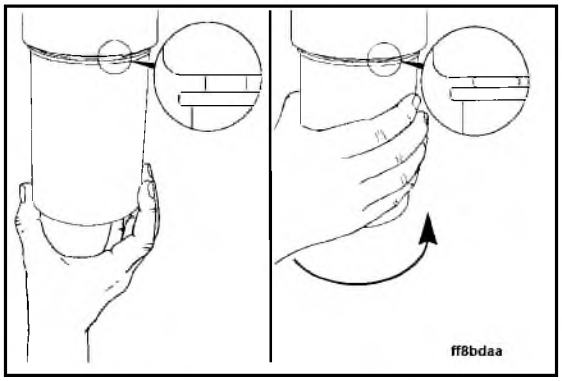

5. Install the filter on the filter head. Tighten the filter until the gasket contacts the filter head surface.
6. Tighten the filter an additional one-half to three-fourths (1/2 to 3/4) turn after the gasket contacts the filter head surface.

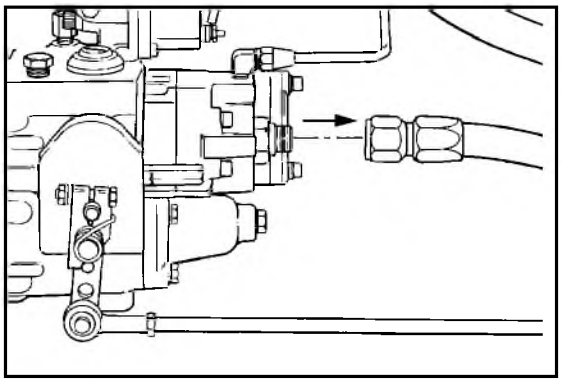

Fuel Hose - Inspect

1. Remove the fuel hose.

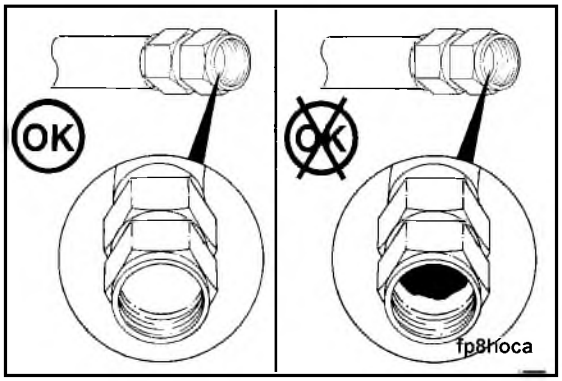

2. Visually inspect the inside of the hose and the hose fitting seating surface.
   a. The inner lining of the hose can separate from the center hose section.
   b. A separation or flap can cause a restriction in the fuel flow.

3. Replace the fuel hose if damage is found.

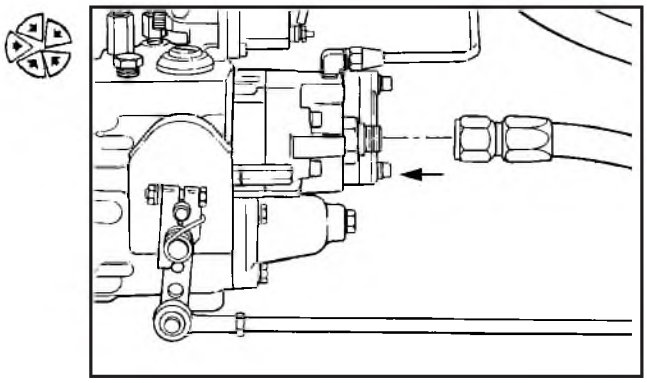

Fuel Lines - Inspect

1. Check the metal fuel lines for sharp bends which can cause a pressure restriction.
2. Check for cracks which can cause a pressure loss.

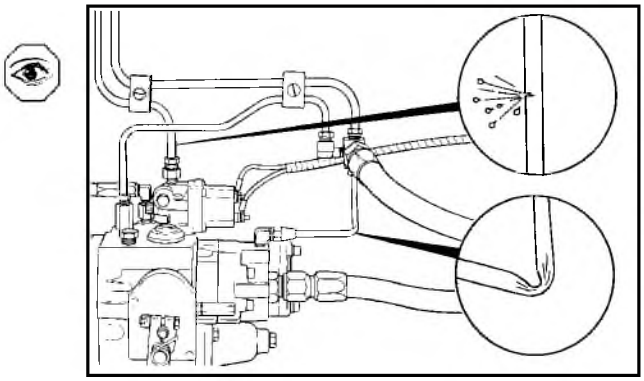

3. If a line(s) is damaged, replace the line(s).

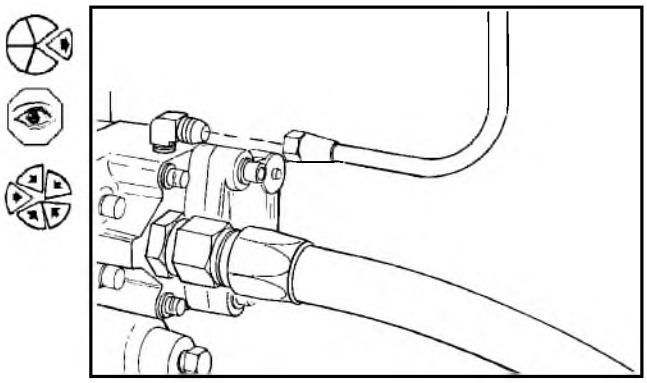

4. Use compressed air to flush the lines to remove any loose particles.
5. Install the fuel lines.

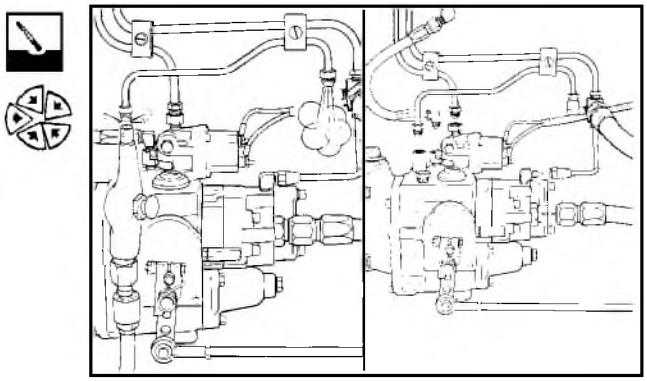

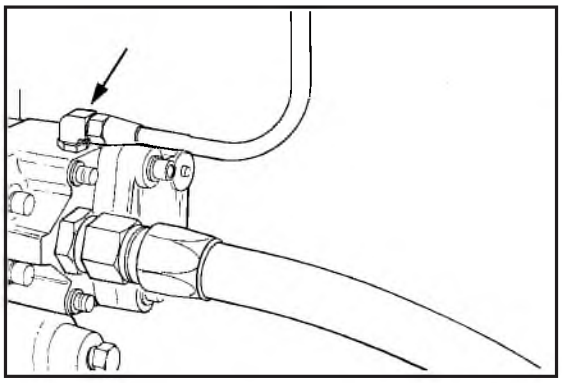

Gear Pump Check Valve - Replace

1. If the check valve in the gear pump return elbow stays open or closed, replace the elbow.

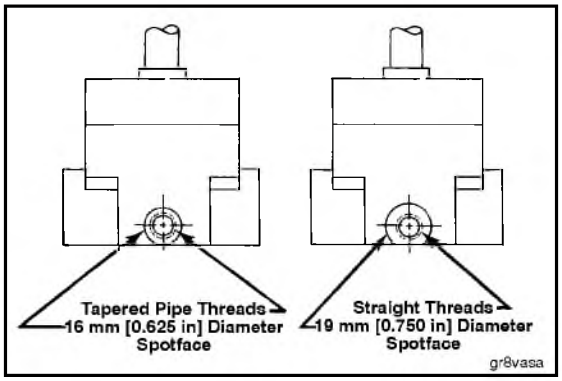

NOTE: Check the elbow threads. Do **not** install an elbow that has straight machine threads in a hole that has a pipe tap thread. A gear pump that has a straight thread will have a 19 mm [3/4-inch] spotface in the valve area. A gear pump that has a pipe tap thread will have a 16 mm [5/8-inch] spotface or no spotface.

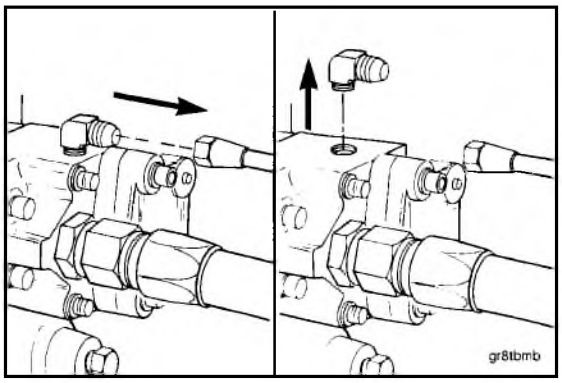

2. Remove the drain line.
3. Remove the check valve elbow.

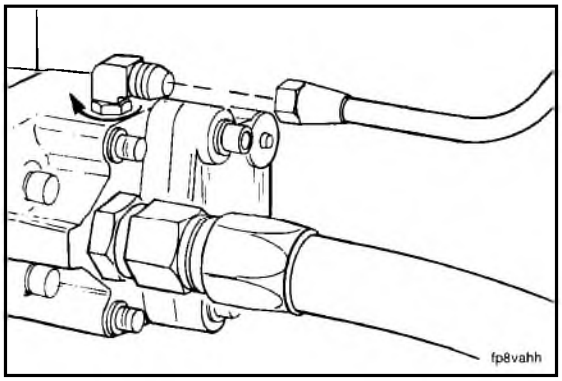

4. Install the check valve elbow that has machine threads to the maximum thread depth. Turn the elbow out until it is pointed toward the drain line. Tighten the jam nut 5.1 to 5.6 N•m [45 to 50 in-lb] torque.
   a. Install the check valve elbow that has a pipe thread until it is tight and pointed toward the drain line.

5. Install the drain line.

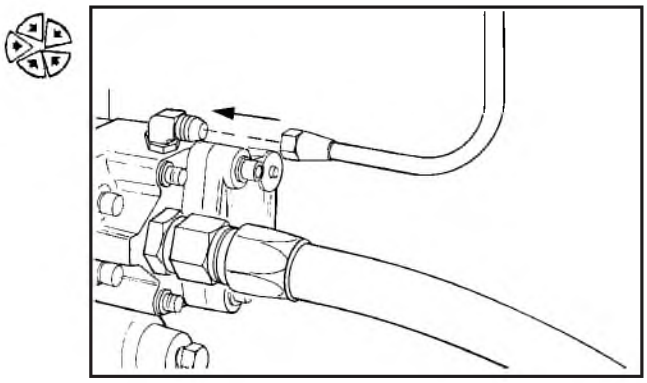

Variable Speed (VS) Governor Leaking Fuel (5-09)

VS Governor Adjusting Screws Are Leaking Fuel

1. Remove the lock nuts and jam nuts. Discard the copper washers.
2. Install new copper washers and the lock nuts.

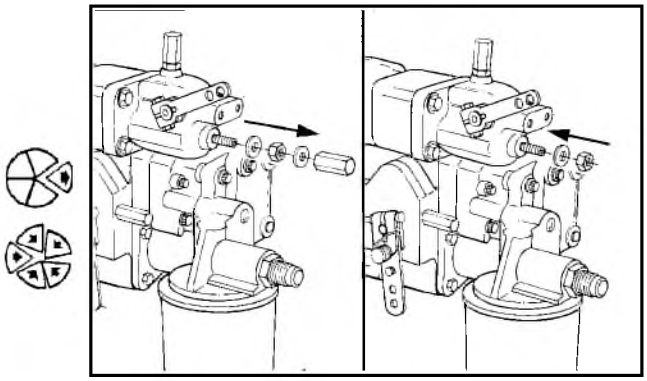

3. Install new copper washers between the jam nuts and the lock nuts. Install the jam nuts.
4. Check the governor speed adjustments. Refer to Procedure 5-05.

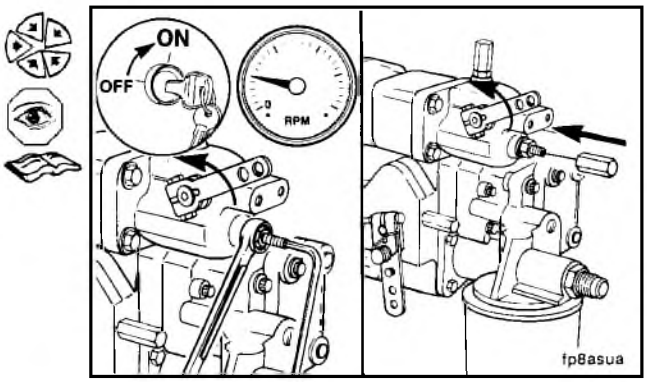

Variable Speed (VS) Throttle Shaft Leaking Fuel

1. Mark the angle of the VS throttle lever on the VS throttle shaft. Remove the VS throttle lever.

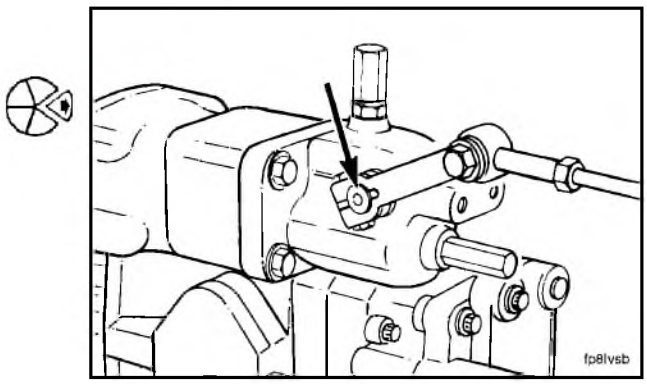

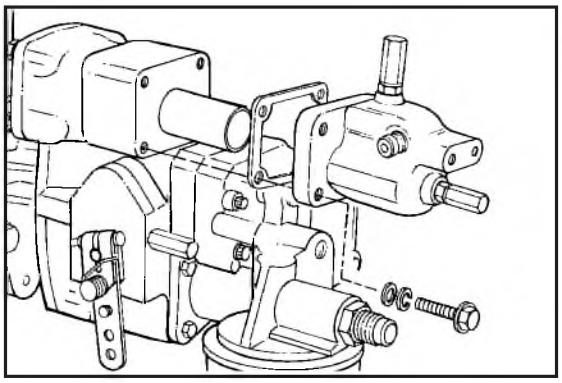

2. Remove the VS spring pack housing cover.

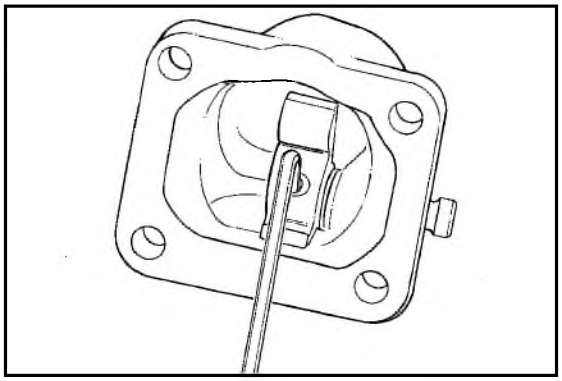

3. Loosen the set screw in the VS throttle stop.

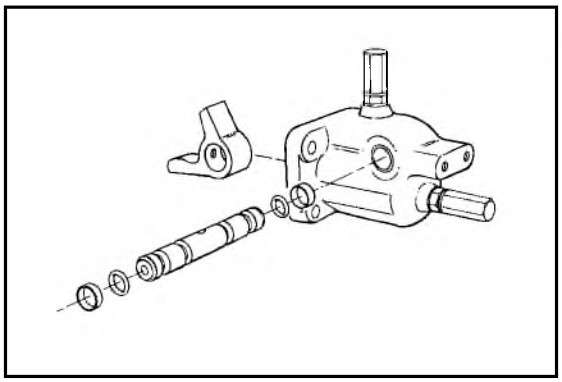

4. Remove the VS throttle shaft from the cover. Discard the O-rings.
5. Remove and discard the shaft dust seals from the cover.

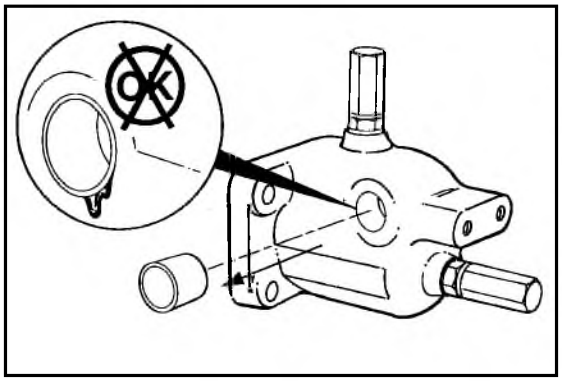

6. If fuel is leaking between the bushings and the cover, replace the bushings.
   a. Press the bushings from the cover.

b. Install the new bushings in the cover.

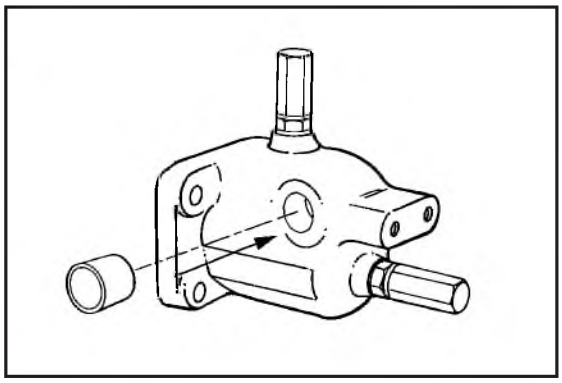

7. Install new dust seals in the cover.
8. Install an o-ring on the shaft near the lever end.

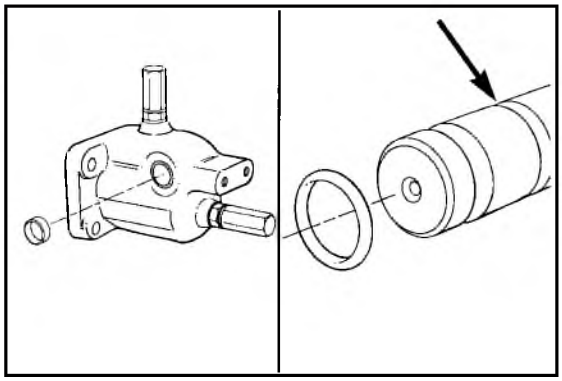

9. Place the throttle stop in the cover.

NOTE: The longest lever of the stop goes toward the rear adjustment screw.

10. Install the shaft in the cover and through the stop.

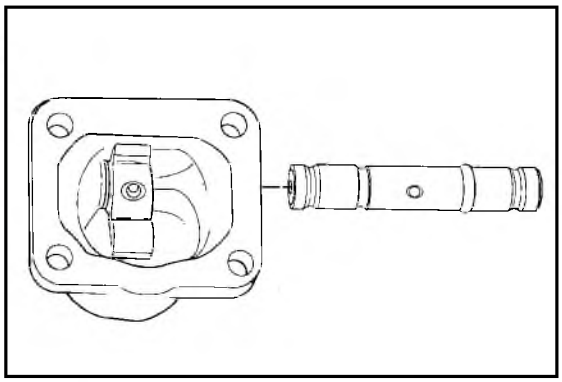

11. Push the shaft out of the other side of the cover.
12. Install the other shaft o-ring and push the shaft back into the cover.

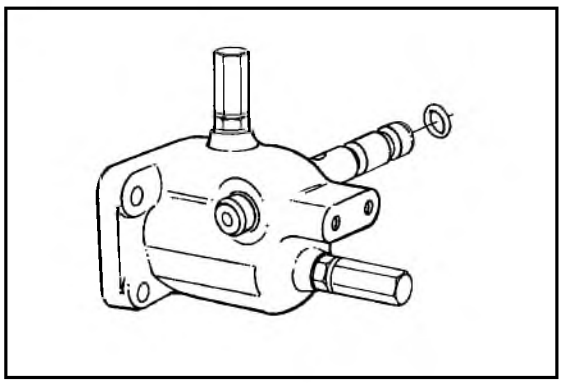

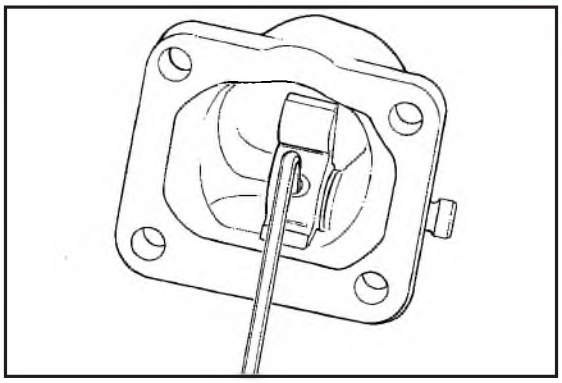

13. Align the setscrew hole in the stop with the hole in the shaft.
14. Install the setscrew in the stop. Tighten the setscrew to 5 to 7 N•m [50 to 60 in-lb] torque.

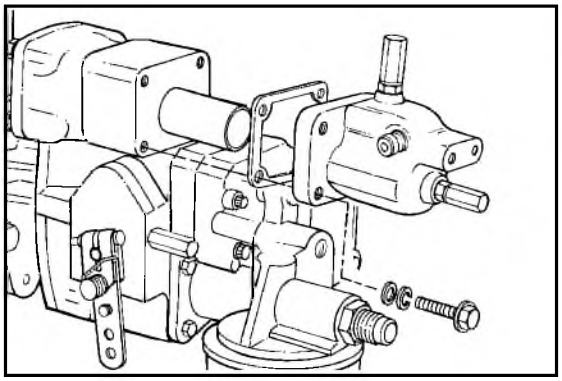

15. Assemble the cover to the fuel pump with a new gasket.

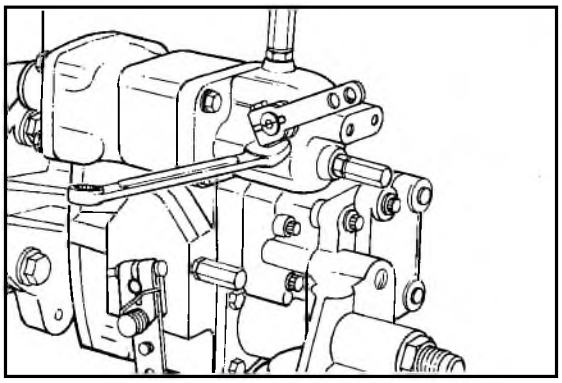

16. Align the lever with the mark on the throttle shaft to install the lever.
17. Tighten the lever retaining nut to secure the lever to the shaft.

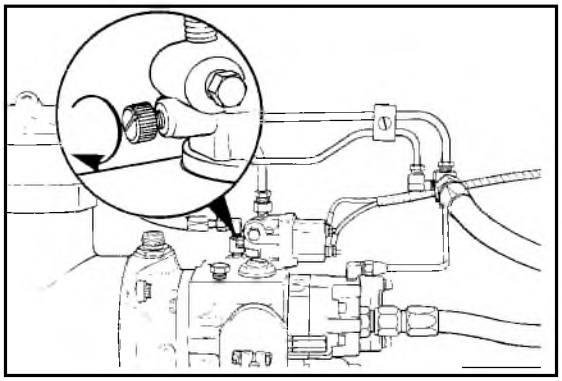

Fuel Shutoff Valve (5-10)

Manual Control

1. To start the engine, in case of an electrical failure, turn the knob on the shutoff valve **clockwise** to open the valve.
2. To stop the engine, turn the shutoff valve knob **counterclockwise**.

Inspect

1. Most of the shutoff valves are internally grounded. If the valve has a long post and a short post, the short post is internally grounded.

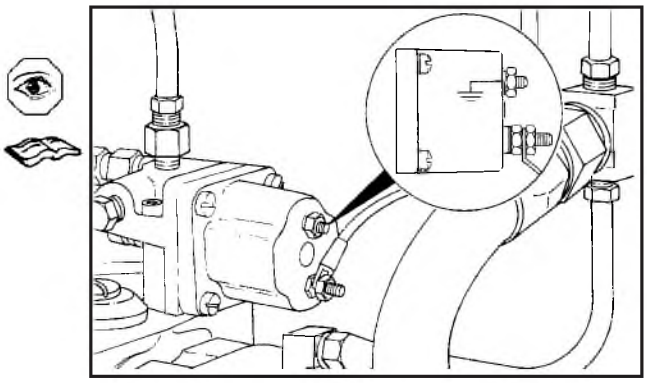

2. Make sure all of the wire connection nuts are tight, whether a wire is attached or **not**.

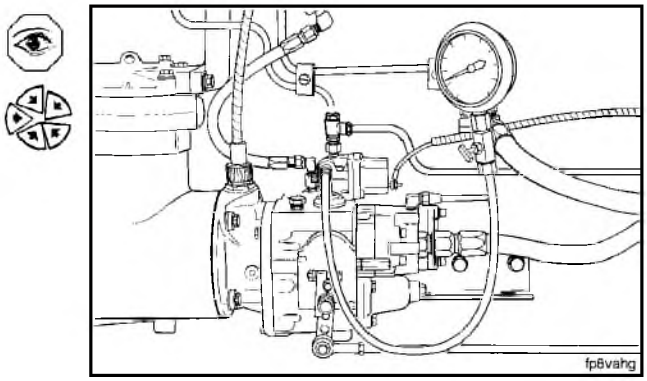

3. Use a wire brush to clean the corroded coil terminals.

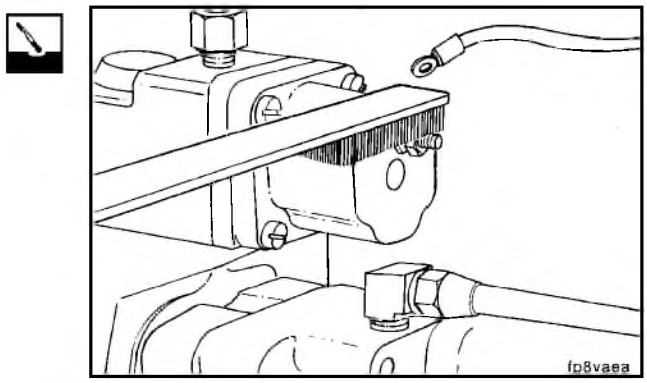

4. Make sure the shutoff valve coil is the correct voltage.
   a. The coil voltage and part number are cast into the terminal connection end of the coil.

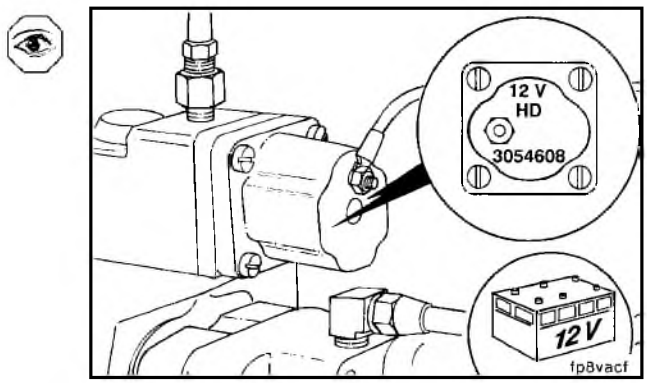

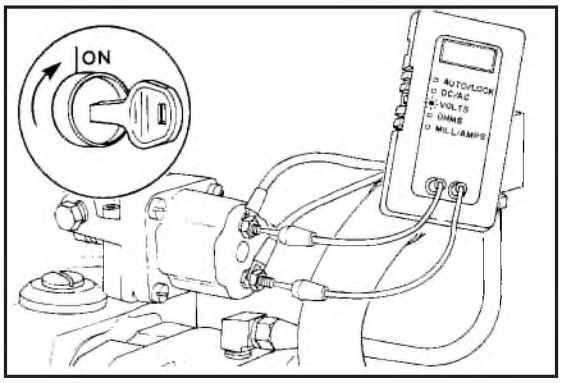

5. Check the voltage to the coil with a volt-ohm meter.

FUEL SYSTEM SPECIFICATIONS 5-02

BASIC APPLICATION REQUIREMENTS

Engine Idle Speed	650 to 725 RPM
Fuel Inlet Maximum Restriction	
Clean Fuel Filter	102 mm Hg (4.0 inch Hg)
Dirty Fuel Filter	203 mm Hg (8.0 inch Hg)
Fuel Drain Line Maximum Restriction	
Without Check Valves	64 mm Hg (2.5 inch Hg)
With Check Valves	165 mm Hg (6.5 inch Hg)
Fuel Check Valve between Fuel Filter and Fuel Pump	
Minimum Opening Pressure	2.1 kPa (0.3 psi)
Fuel Check Valve between Fuel Pump and Cylinder Head	
Opening Pressure	21 to 55 kPa (3 to 8 psi)
Engine Minimum Cranking Speed	150 RPM
Fuel Check Valve in Fuel Drain Line	
Opening Pressure	13 to 25 mm Hg (1/4 to 1/2 psi)
Derate Engine Fuel Rate for High Altitude	4% per 300 M (1000 ft) above 3600 m (12,000 ft)
Derate Engine Fuel Rate for Hot Weather	2% per 11°C Above 38°C (1% per 10° above 100°F)
Shutoff Valve Solenoid Coil Resistance in Ohms	
6VDC	1.72 - 2.02
12VDC	7.0 - 8.0

6. The coil resistance is listed on the specifications sheet. Refer to Reference 5-02.

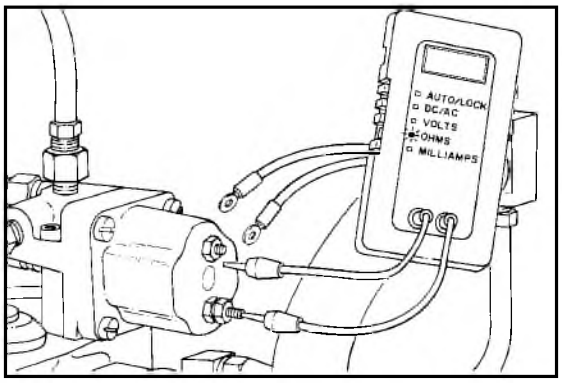

7. Make sure the coil wires are **not** connected before checking the coil resistance.
8. Check the coil resistance with a volt-ohm meter.
   a. Replace the coil if the resistance does **not** meet the specifications.

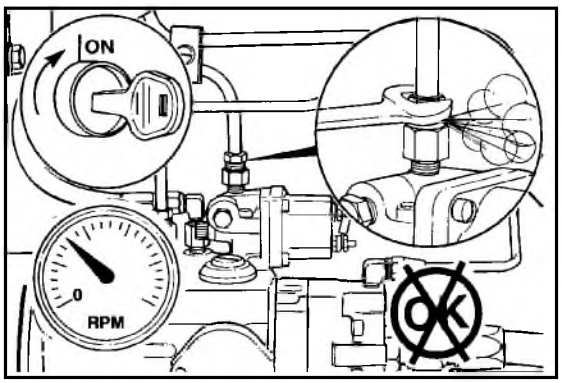

Fuel Pump - Flow Check, Prime And Rotation (5-11)

Fuel Flow After The Fuel Pump - Check

1. Loosen the fuel line at the shutoff valve while the engine is cranking. If fuel does **not** come out of the connection, the pump **must** be primed.

Fuel Pump - Prime

1. To reduce engine cranking time, prime the fuel pump.

NOTE: If the fuel pump is dirty, clean the outside of the pump.

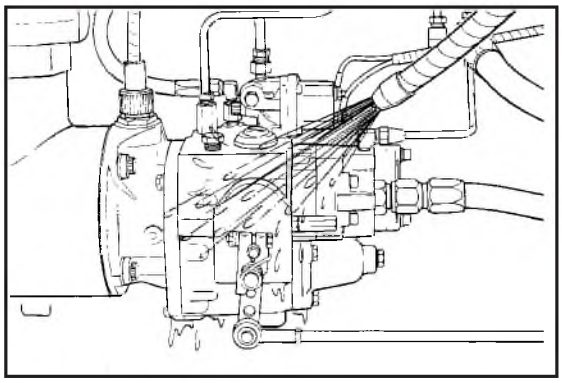

2. Remove the plug from the top of the housing.
3. Fill the housing with clean fuel oil.

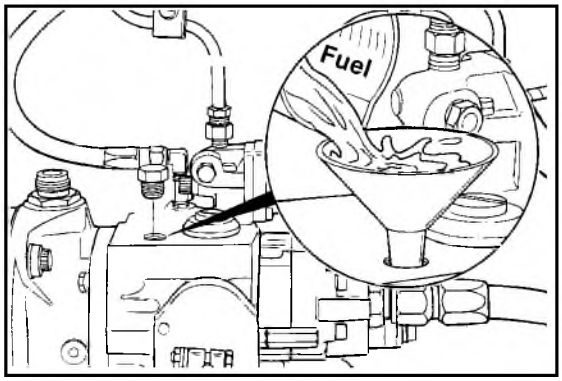

4. Tighten the plug to 30 N•m [20 ft. lb] torque.

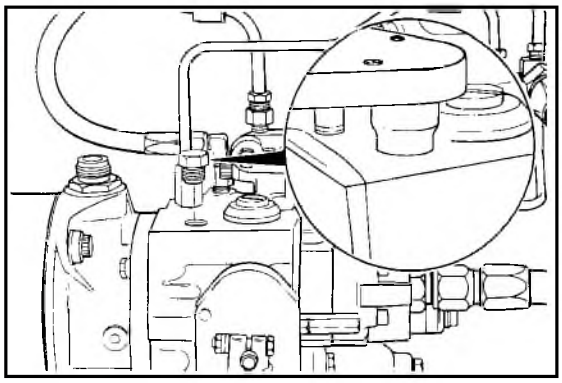

5. If the priming plug is hard to remove or the fuel pump is a VS type, remove the fuel supply hose to the gear pump.
6. Fill the gear pump with clean engine lubricating oil.

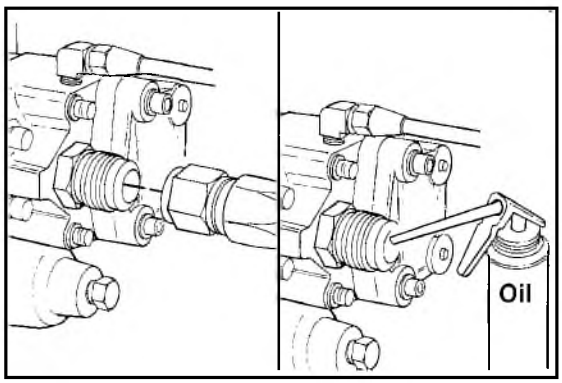

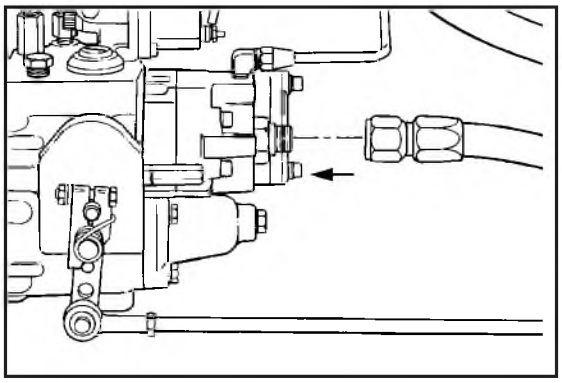

7. Install the supply hose to the gear pump.

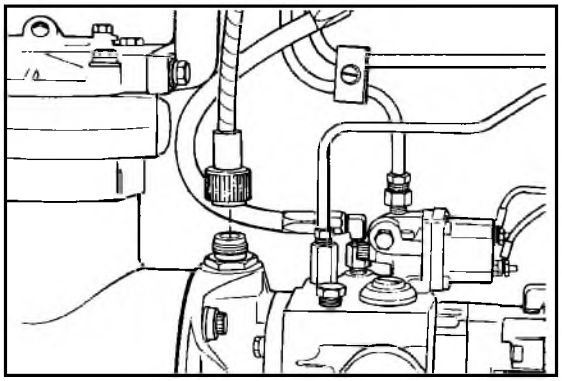

Fuel Pump - Rotation Check

1. Remove the tachometer drive cable from the fuel pump.

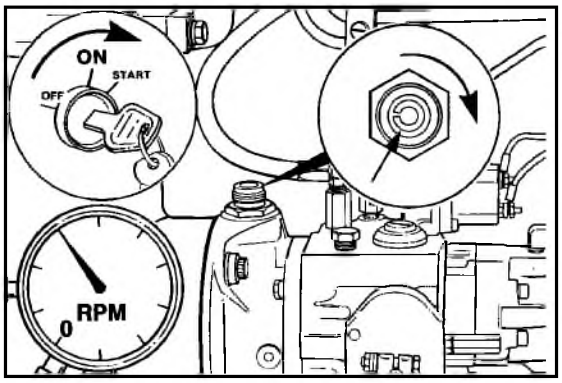

2. Crank the engine and make sure the tachometer drive shaft is turning.

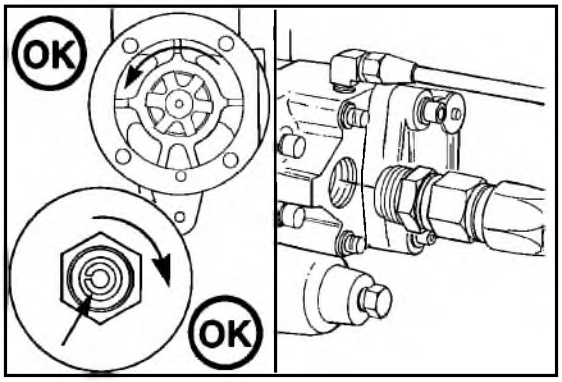

3. If the tachometer drive shaft rotates, check the gear pump for rotation.
   a. Remove the fuel supply hose at the gear pump.

b. Look into the gear pump and crank the engine. The gear pump gears **must** turn.

c. If the gear pump gears do **not** turn, replace the fuel pump. Refer to Procedure 5-07.

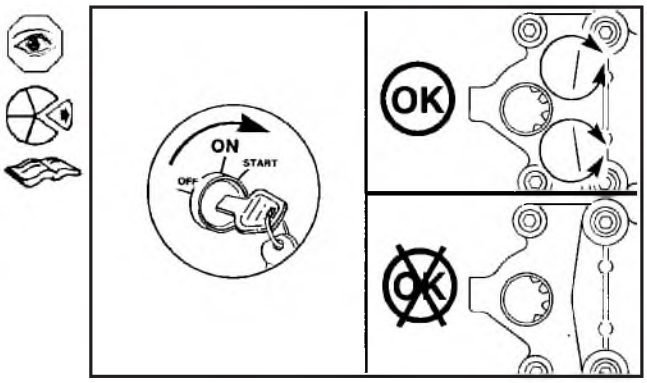

4. If the tachometer drive shaft does **not** turn, remove the fuel pump. Refer to Procedure 5-07.

   a. Crank the engine and check the air compressor crankshaft or the accessory drive shaft for rotation.

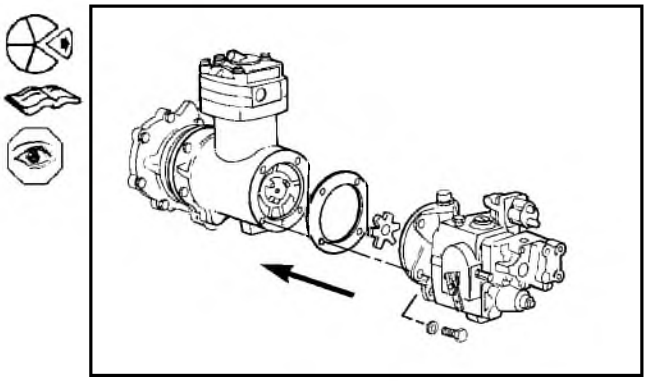

   b. If the air compressor or accessory drive shaft does **not** turn, refer to Procedure 7-28.

   c. If the shaft turns, the fuel pump is damaged and **must** be replaced. Refer to Procedure 5-07.

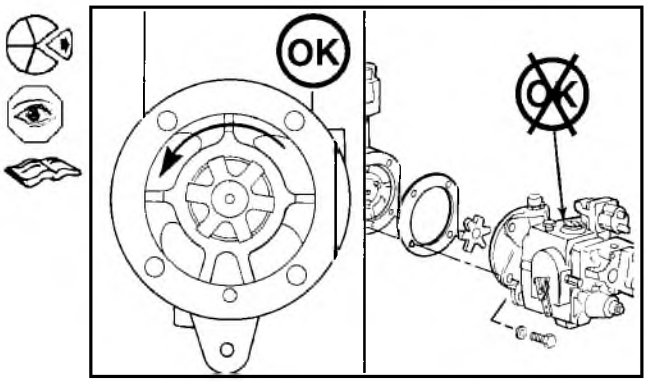

Air Leaks (5-12)

Air Leak In Fuel Suction Line - Check Gear Pump Drain

1. Remove the gear pump cooling drain line from the check valve and plug the line.
2. Install a hose on the check valve and place the other end of the hose in a container.

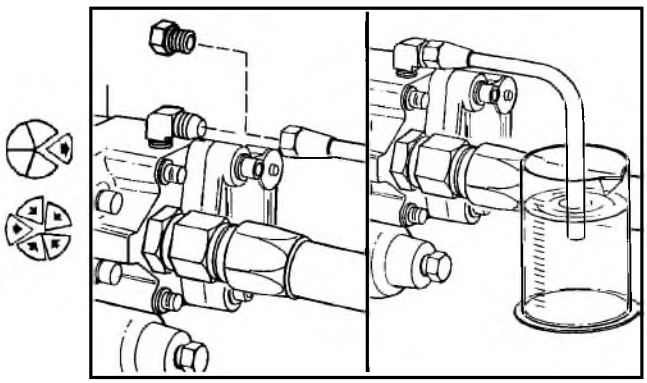

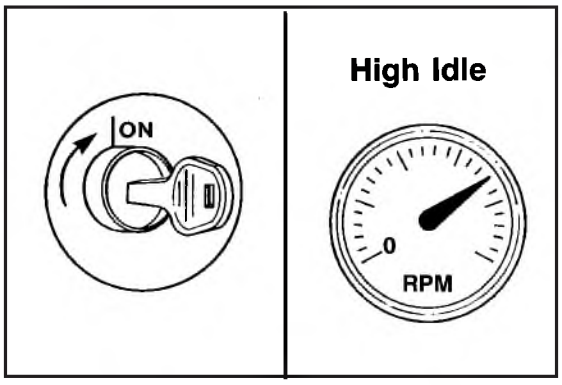

3. Operate the engine at high idle with no load.

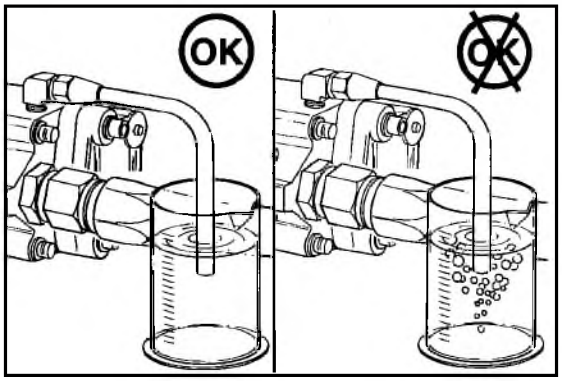

4. If air is in the fuel pump suction line, bubbles will be in the fuel. Place the end of the hose below the surface of the fuel.

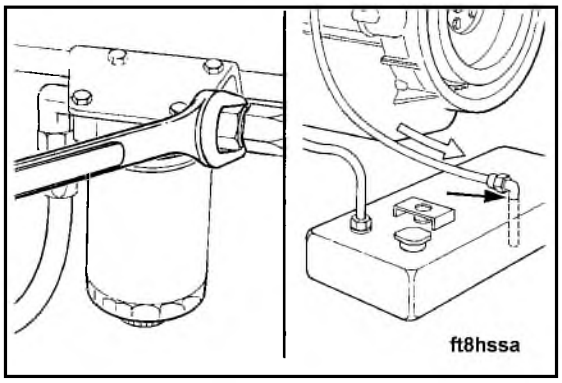

a. Tighten the hose connections and fuel filter.
b. Check the drop tube in the fuel tank for damage.

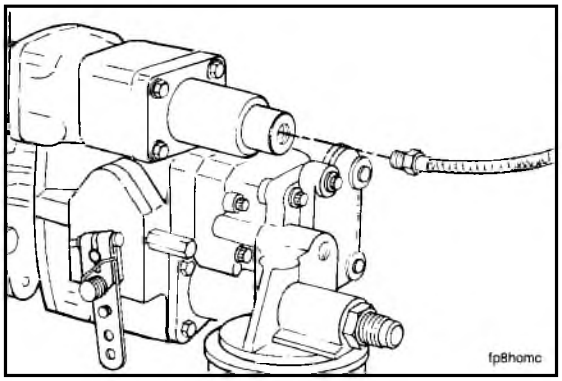

c. Remove the road speed governor air supply tube, if equipped.

d. Correct the air leak and test again for other leaks.

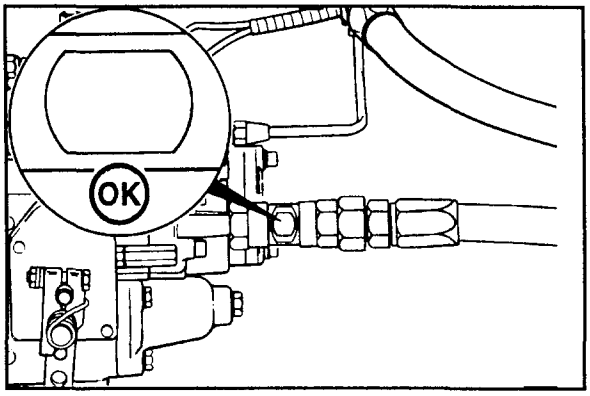

5. Remove the hose from the check valve and the plug from the cooling drain line.
6. Install the drain line on the check valve.

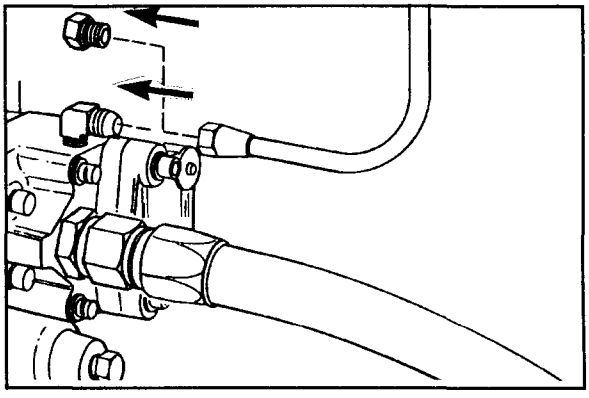

Air Leak In Fuel Suction Line - Check With ST-998

1. Remove the fuel suction line.
2. Install a sight glass, Part No. ST-998, in the line.
3. Operate the engine at high idle with no load.

NOTE: A small air leak will have a "milky" appearance.

NOTE: A large air leak will look like bubbles in the fuel.

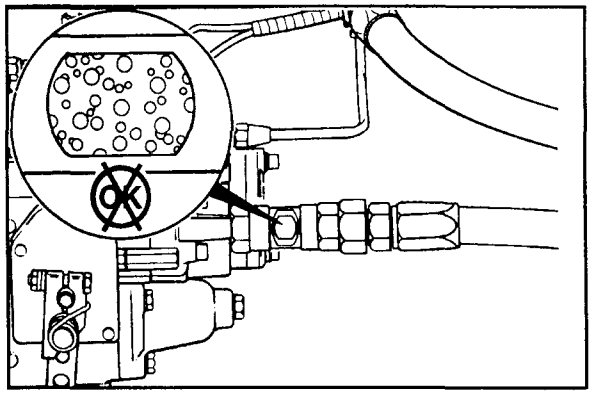

4. If an air leak is found, visually inspect the fuel lines and fittings for damage. Check for loose connections.
5. Replace the damaged lines or tighten the loose connections.

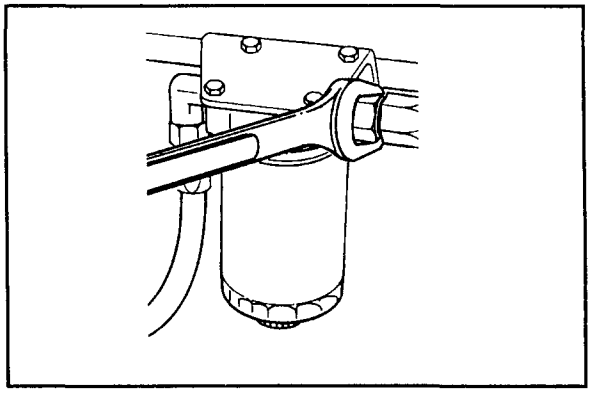

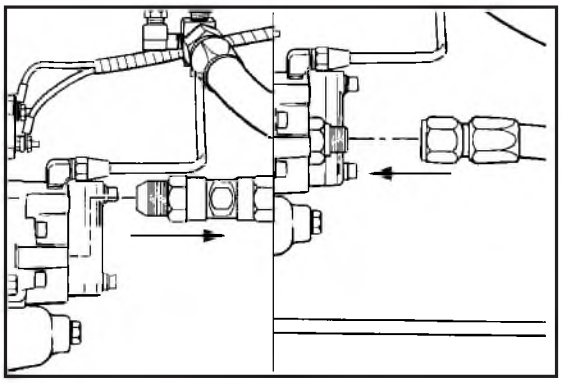

6. Remove the sight glass and install the suction hose.
7. Test the engine again for other fuel leaks.

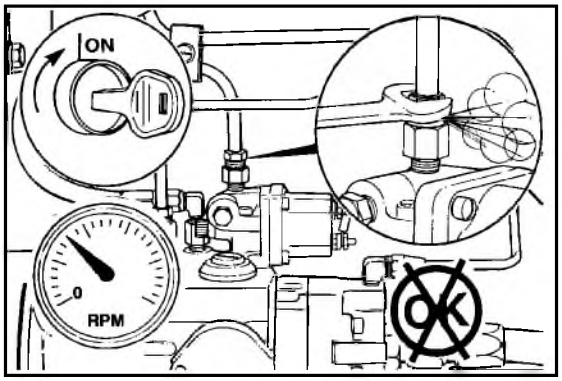

Air Leak In Fuel Pump - Check

1. Operate the engine to create pressure in the fuel lines.
2. Loosen the fuel outlet line at the shutoff valve to remove the air from the fuel pump.

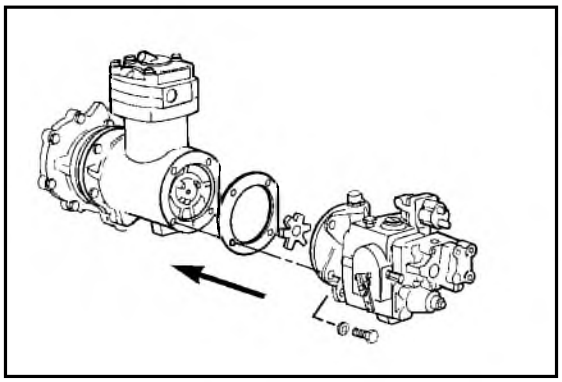

3. If the air flow continues, remove and repair the fuel pump. Refer to Procedure 5-07.

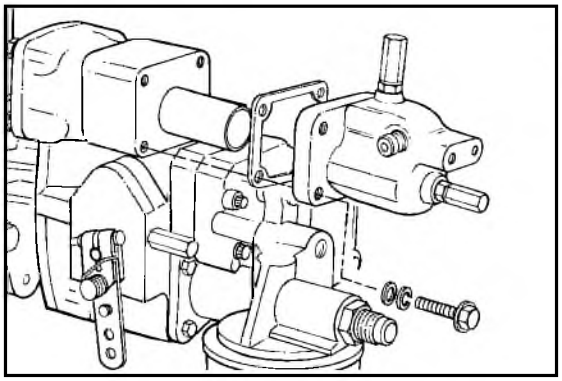

Air Leak In Road Speed Governor - Repair

1. Remove the air tube.
2. Remove the road speed governor cover.

3. Remove the piston from the cover.
4. Remove the T-ring seal and the backup rings from the piston. Discard the seal and backup rings.

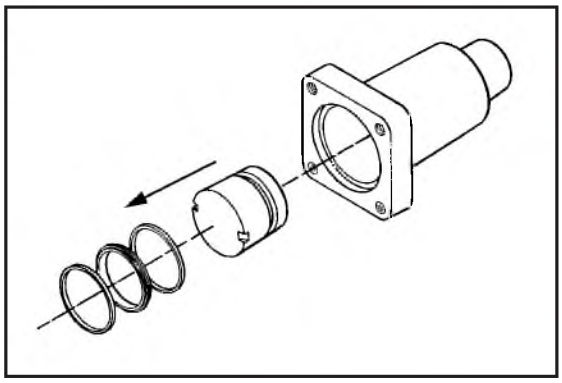

5. Install a new T-ring seal and backup rings on the piston.
6. Slide the piston into the piston installation tool, Part No. 3375703.

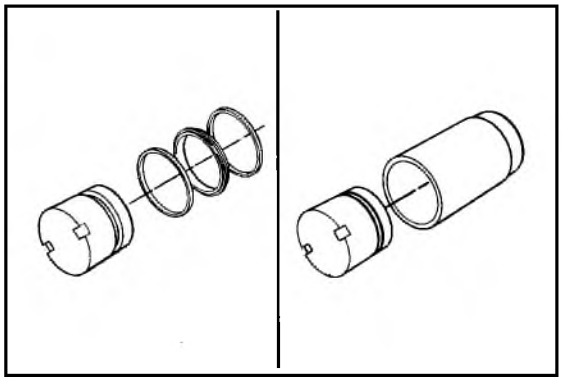

7. Insert the installation tool with the piston, into the cover.
8. Push the piston into the cover.

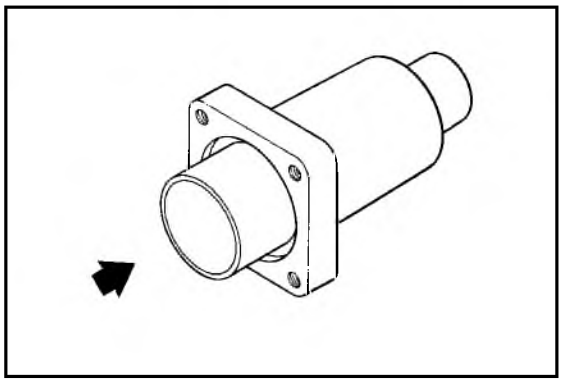

9. Remove the installation tool from the cover.
10. Use a new gasket and install the cover to the fuel pump.

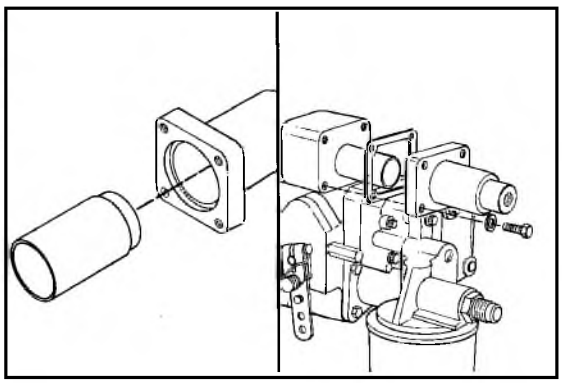

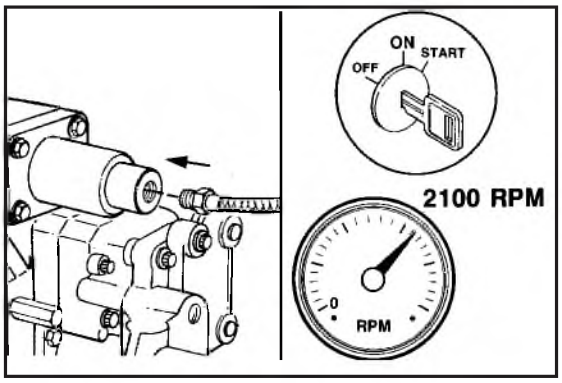

11. Install the air tube.
12. Test the engine again for other fuel leaks.

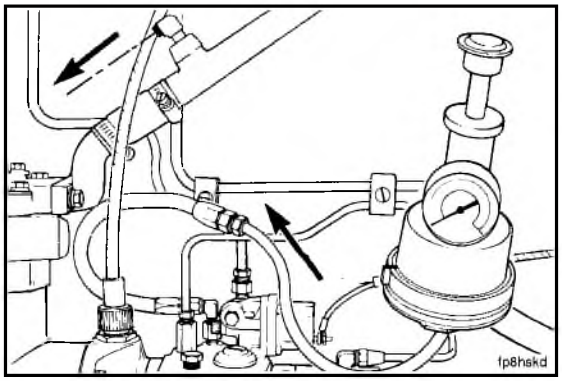

Air Leak In AFC - Check

1. Remove the AFC air inlet line from the air intake manifold.
2. Install the pressure pump, Part No. 3375515, to the line.
   a. If the pressure pump is **not** available, install a regulated air pressure hose, with a shutoff valve, to the line.

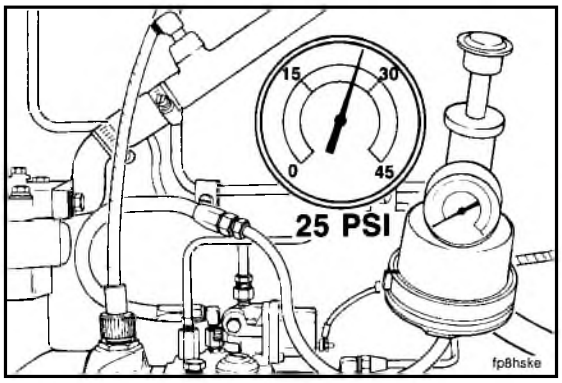

3. Apply 170 kPa [25 psi] air pressure to the AFC air supply line.

NOTE: If shop air is in use, close the shutoff valve.

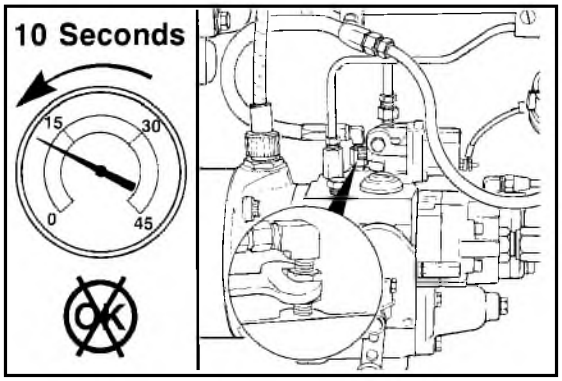

4. If the pressure drops any within 10 seconds, check the line and connections for leaks.
5. Replace the line or tighten the connections if a leak is found.

6. If the pressure drops and the line and connections do **not** leak, remove the AFC fuel return line from the top of the fuel pump.
7. Apply 170 kPa [25 psi] to the AFC air supply line.
8. When the AFC bellows moves, a puff of air or a small amount of fuel will come out of the top of the fuel pump.

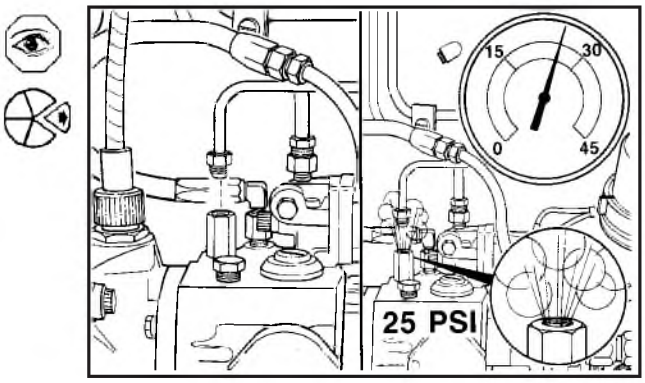

9. If the air or fuel does **not** come out of the top of the fuel pump and the pressure does **not** drop, the check valve connection in the AFC cover plate can have a restriction.

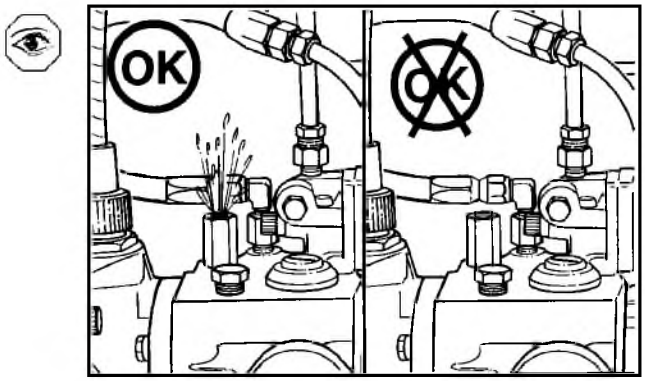

10. Remove and clean or replace the check valve.

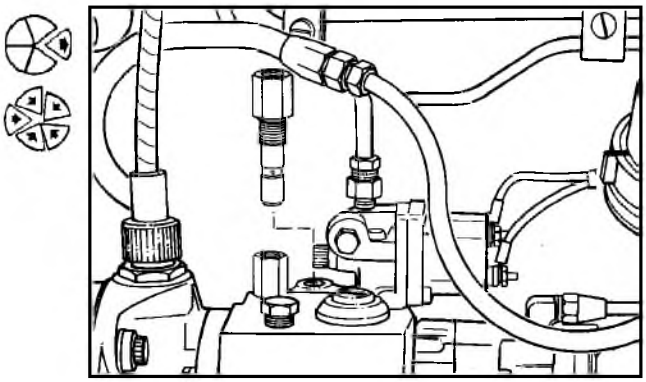

11. If the air flow is continuous from the top of the fuel pump, the AFC bellows is defective.
12. Replace the fuel pump. Refer to Procedure 5-07.

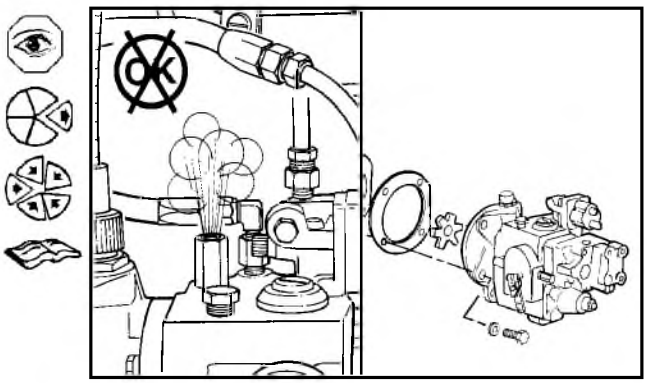

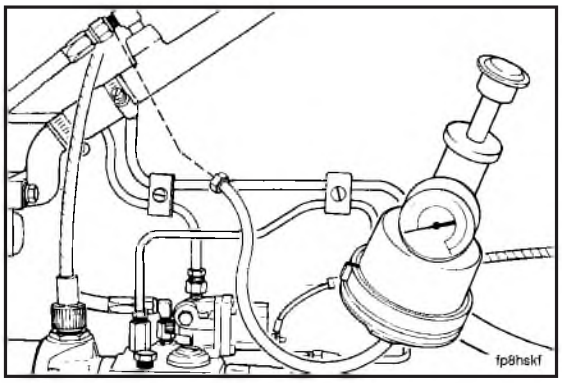

13. Remove the pressure pump or shop air line and install the AFC air tube on the intake manifold.

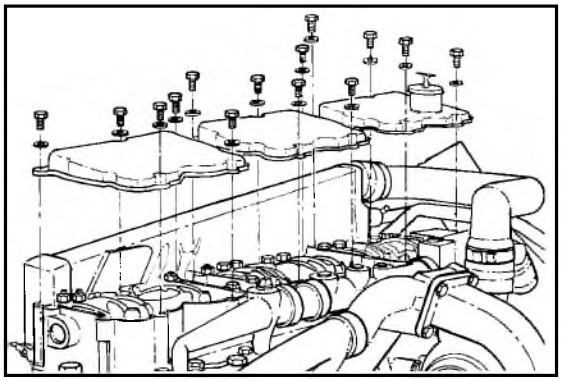

Cylinder Misfire (5-13)

Locate

1. Remove the rocker lever cover. Refer to Procedure 7-02.
2. Operate the engine until it is up to 70°C [160°F].
3. Install Part No. ST-1193 Rocker Lever Actuator on an injector rocker lever.

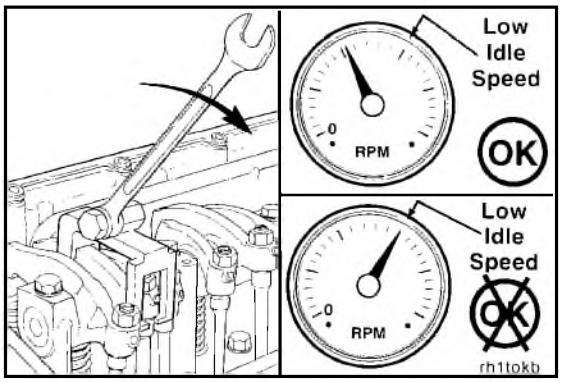

4. Hold the injector plunger down while the engine is running at low idle. This will stop the fuel flow to that injector.
   a. If the engine RPM decreases when an injector plunger is held down, the injector is good.

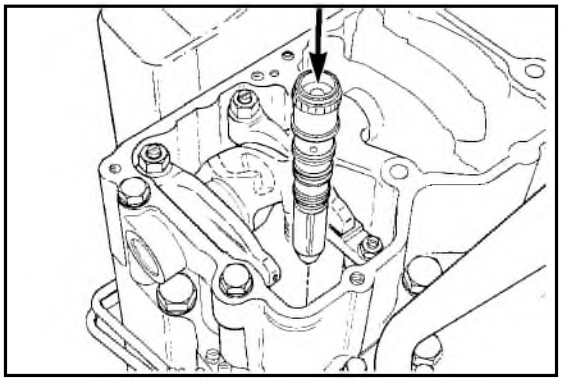

5. If the engine RPM does **not** decrease, replace the defective injector. Refer to Procedure 5-06.

Engine Oil Dilution By Fuel Oil (5-14)

Black Light Procedure - Check

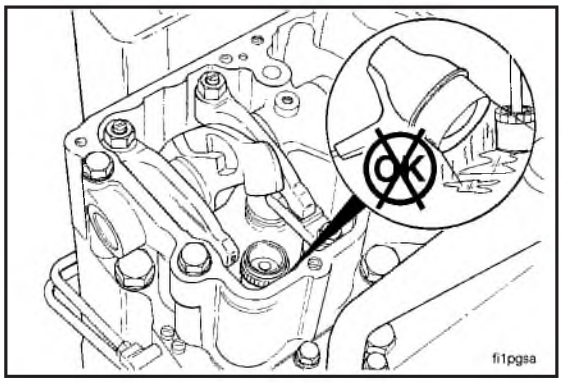

1. Use a black light, Part No. 3377253 or 3377394, if it is available. Refer to the black light operating instructions. If a black light is **not** available, see ''Fuel Passages Pressurize.''
2. Operate the engine at idle speed.
3. Use the black light to find fuel leaks from inside or around the injector.

NOTE: Fuel will have a ''milky'' appearance in the lubricating oil.

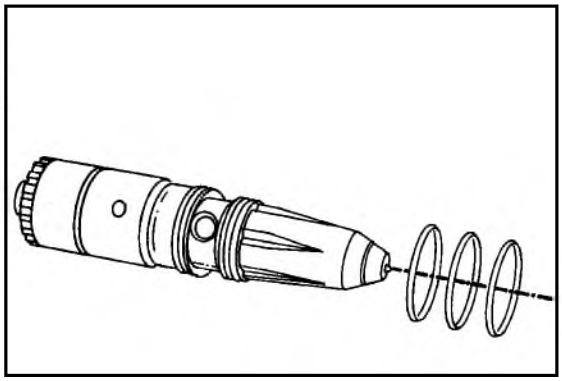

4. If the leakage is around the outside of the injector, check the top injector o-ring for damage.
   a. Remove the injector and replace all three o-rings.

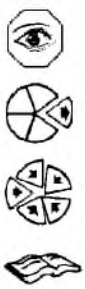

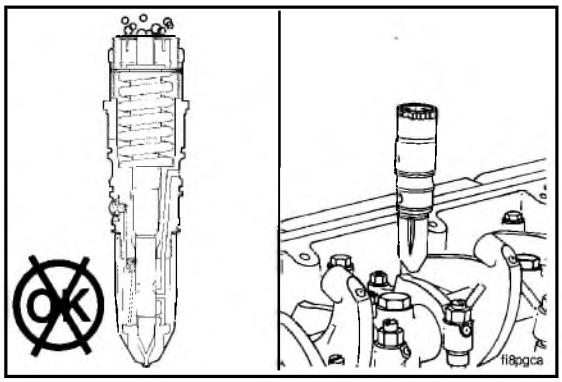

5. Check for leakage from the inside of the injector adapter. Replace the injector if it is leaking more than one bubble every five (5) seconds. Refer to Procedure 5-06.

Fuel Passages - Pressurize

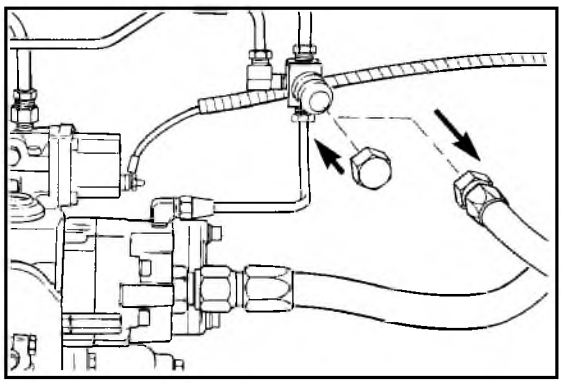

1. Remove the injector drain and install a cap in the drain connection.

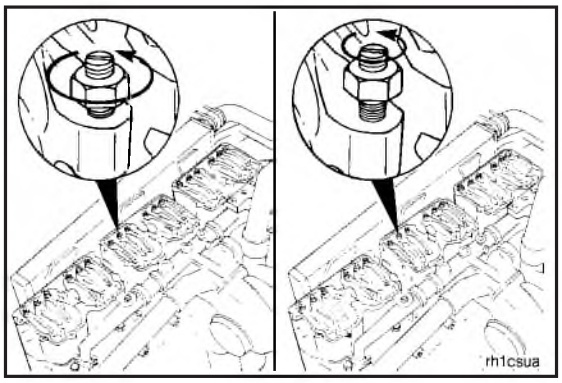

2. Tighten all of the injector adjusting screws to 7 N•m [60 in-lbs] torque. The plunger **must** bottom in the cup.

Caution: To prevent damage, do not rotate or operate the engine during this procedure.

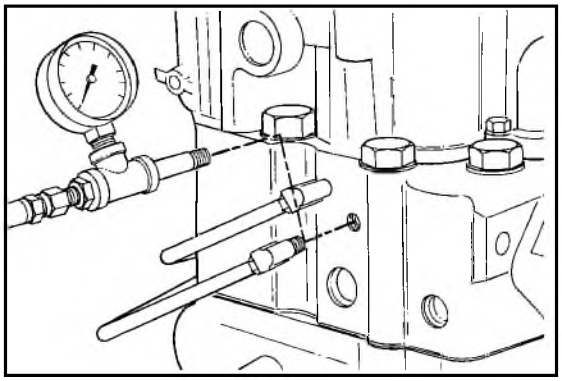

3. Remove the fuel supply line from the cylinder head and install a regulated air line.

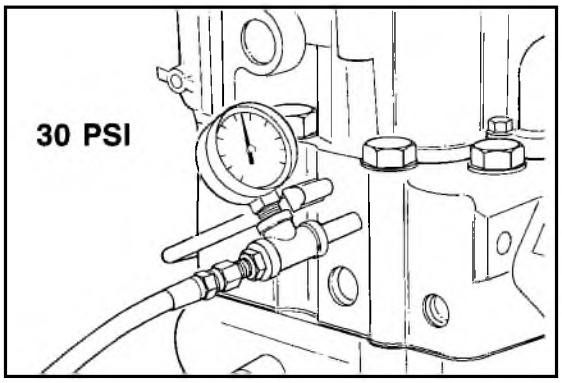

4. Adjust the air pressure to 205 kPa [30 psi].

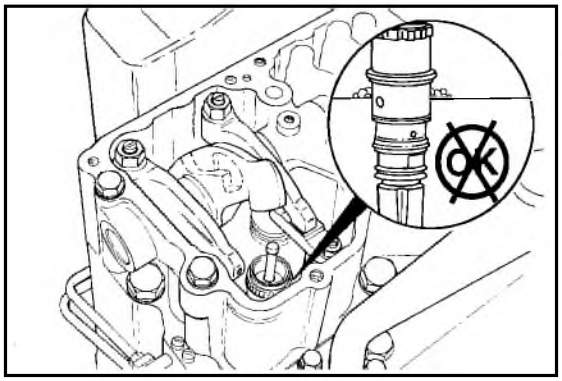

5. If the injector o-rings are leaking, air bubbles will appear around the outside of the injector.

6. Remove the injector and replace the leaking injector o-rings. Refer to Procedure 5-06.

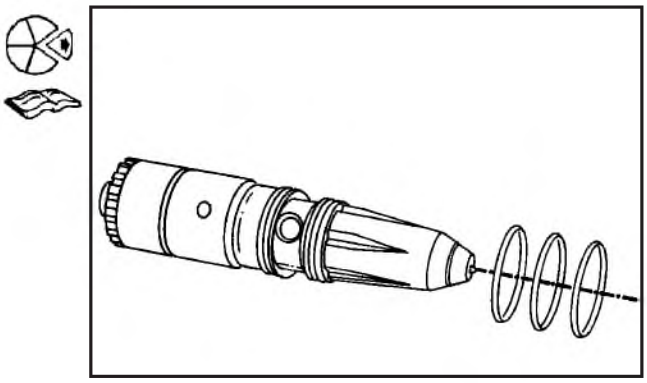

7. Check for leakage through the inside of the injector adapter. Replace the injector if it is leaking. Refer to Procedure 5-06.

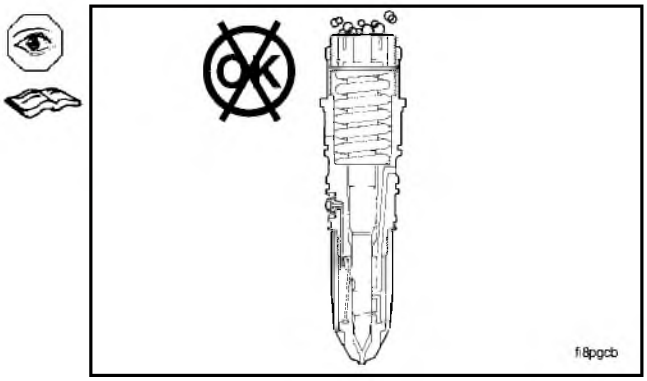

8. Remove the air line and install the fuel supply line.

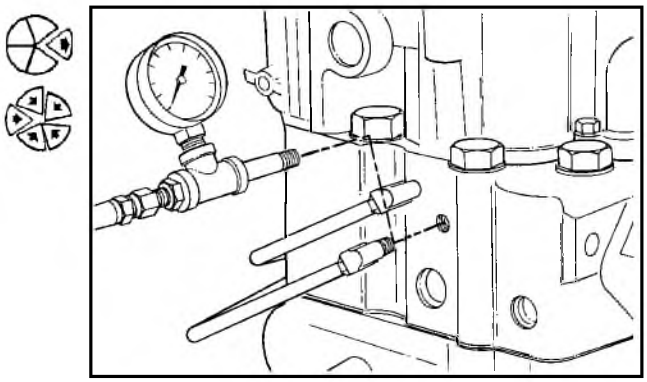

9. Remove the cap from the injector drain connection and install the injector drain line.

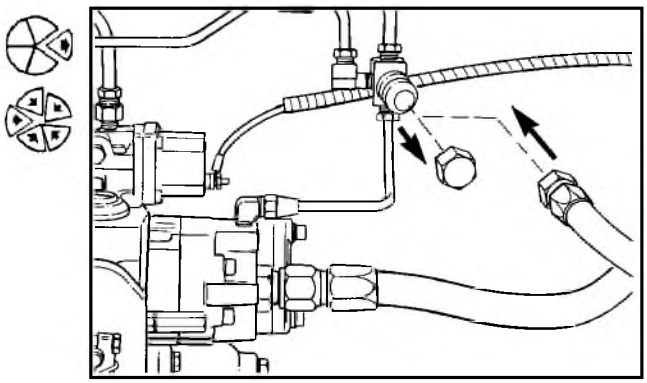

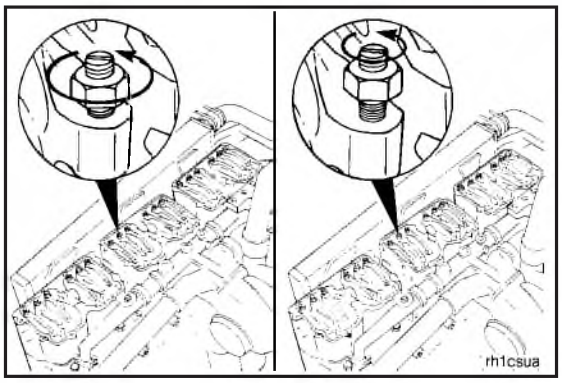

10. Loosen the injector adjusting screws and adjust the injectors. Refer to Procedure 7-04.

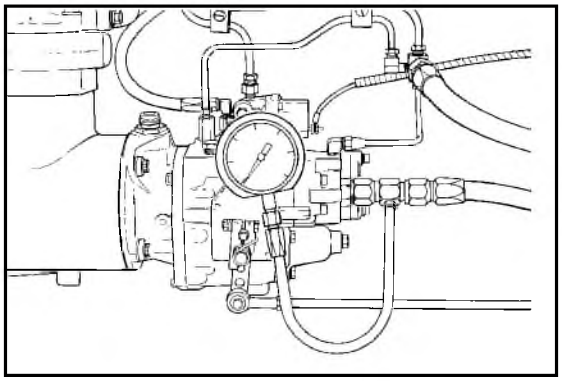

Fuel Line Restriction (5-15)

Fuel Supply Line Restriction - Check

1. Remove the fuel supply hose to the gear pump or the plug from the rear of the fuel pump mounted fuel filter and install the vacuum gauge, Part No. ST-434.

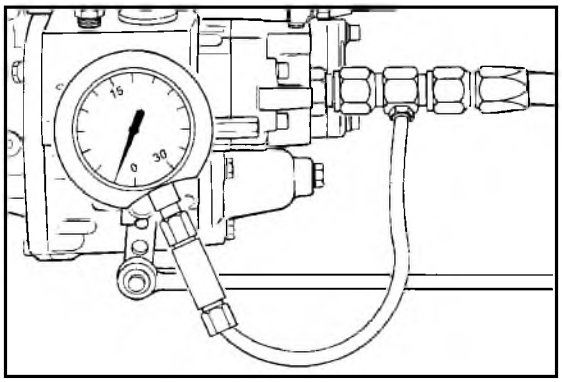

2. Hold the gauge at the same level as the gear pump.

NOTE: The gauge will **not** measure the correct vacuum if the gauge is **not** held at the same level as the gear pump.

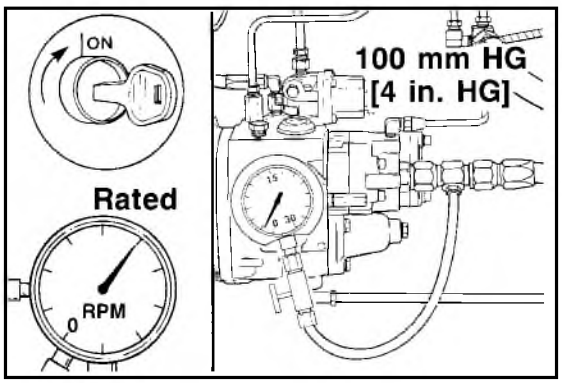

3. Operate the engine at rated RPM and full load. Refer to Procedure 5-05.

4. Observe the reading on the gauge.

NOTE: The maximum fuel inlet restriction is as follows:

   a. Clean fuel filter is 100 mm, Hg. [4 in. Hg.].

   b. Dirty fuel filter is 200 mm, Hg. [8 in. Hg.].

5. Correct the restriction or replace the fuel filter. Refer to Procedure 5-08.

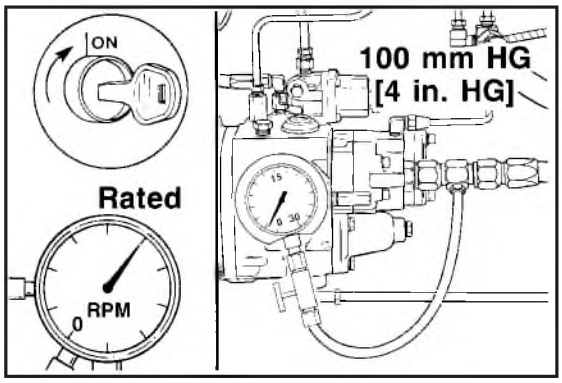

Fuel Drain Line Restriction - Check

1. Remove the fuel drain line and install the pressure gauge, Part No. ST-1273.

   a. Use the hose adapters from Part No. ST-434 to connect the pressure gauge hose.

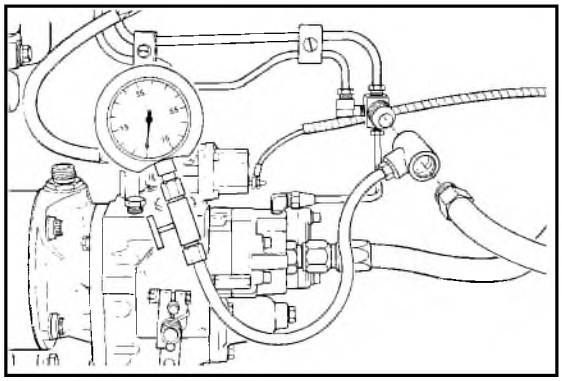

2. Operate the engine at rated RPM and full load. Refer to Procedure 5-05.

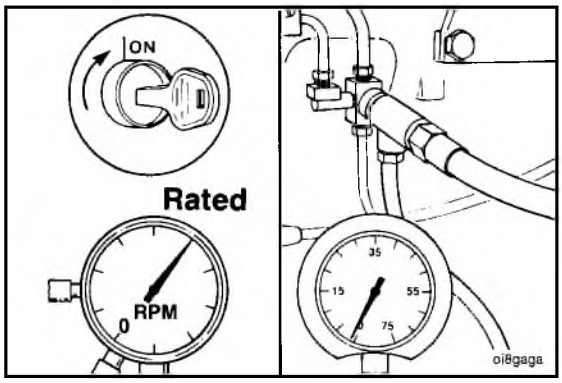

NOTE: Make sure the drain line does **not** have any loops or is **not** crimped.

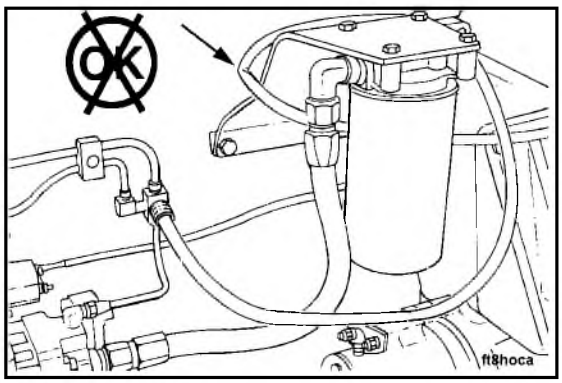

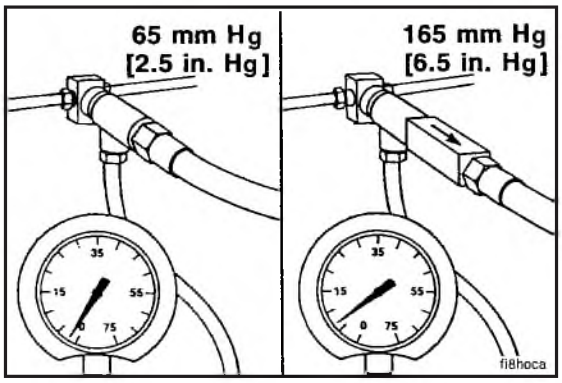

3. Observe the reading on the gauge. Hold the gauge at the same level as the connection.

NOTE: The maximum drain line restriction is as follows:

Without Check Valves	With Check Valves
65 mm Hg. [2.5 in. Hg.]	165 mm Hg [6.5 in. Hg.]

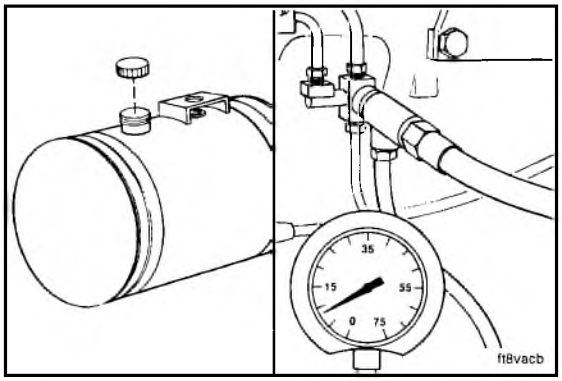

4. If the restriction is above the specifications, remove the fuel tank fill cap and check again.

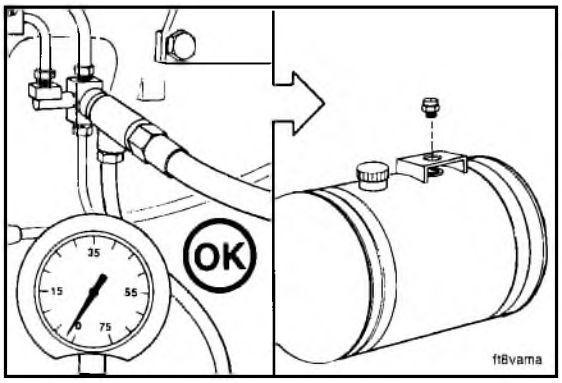

5. If the restriction is below the specifications when the cap is removed, replace the tank vents.
6. If the restriction is still above the specifications, inspect the drain lines.

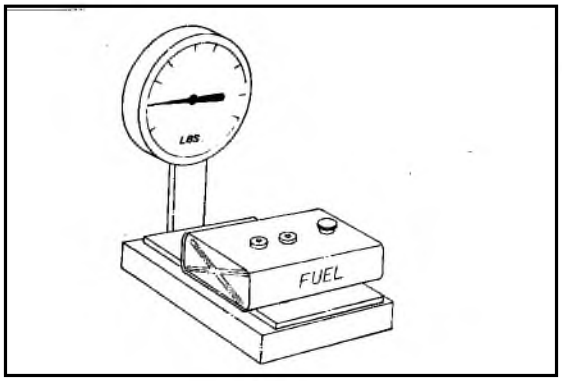

Fuel Consumption Check (5-16)

Refer to the fuel consumption check list sheets in the back of this chapter.

The most accurate method to check the fuel consumption is to weigh the fuel used.

1. Install a remote fuel tank (1) with enough capacity to run 80 kilometers [50 miles].
2. Fill the fuel tank. Weigh the tank with the fuel. The weight of No. 2 diesel fuel is nominally 0.844 kg per liter [7.03 pounds per gallon].

NOTE: Use a scale capable of measuring within 0.045 kg [0.1 lb.] to weigh the fuel tank.

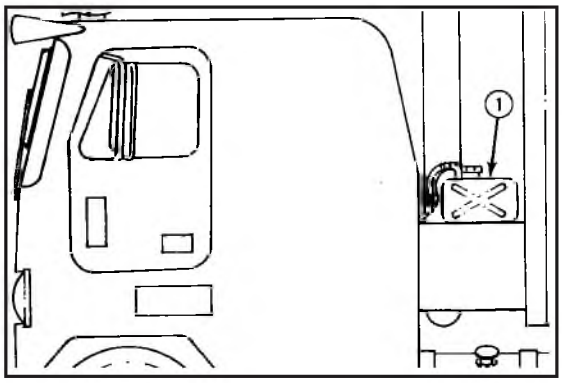

3. Measure the distance traveled with an accurate odometer. The odometer accuracy can be checked by using measured miles, or kilometers.

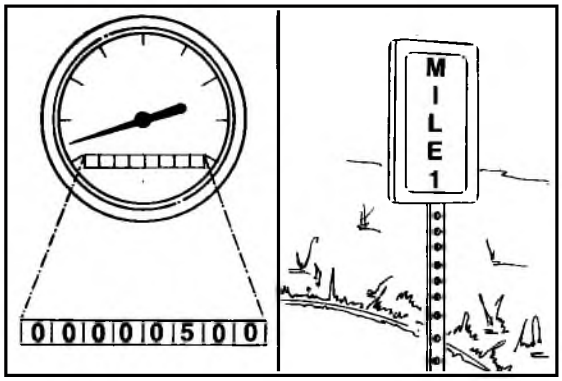

4. After traveling the route, weigh the fuel remaining, and compute the fuel used in litres [gallons] as required.

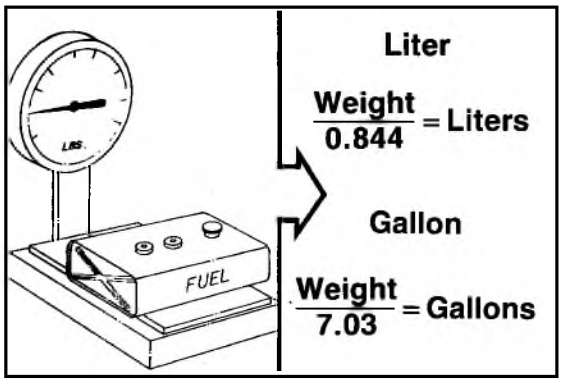

5. Compute the kilometers per litre or miles per gallon.

$$\frac{\text{Miles}}{\text{Gallons}} = \text{MPG}$$

$$\frac{\text{Kilometers}}{\text{Liters}} = \text{KPL}$$

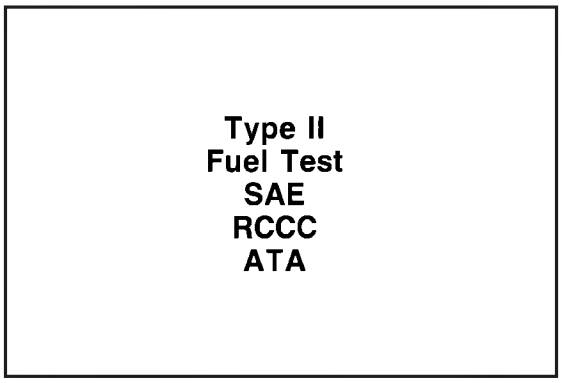

6. In addition to the measurement of the fuel used, the following factors provide points for running the recognized Type II Society of Automotive Engineers Test.

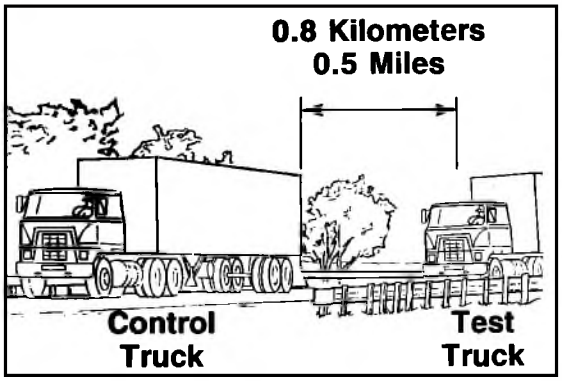

7. Perform the test with the test vehicle and a control vehicle. The control vehicle compensates for changes in traffic conditions.
8. The vehicles **must** stay close together to experience the same varying traffic and weather conditions but **not** so close as to affect each other.

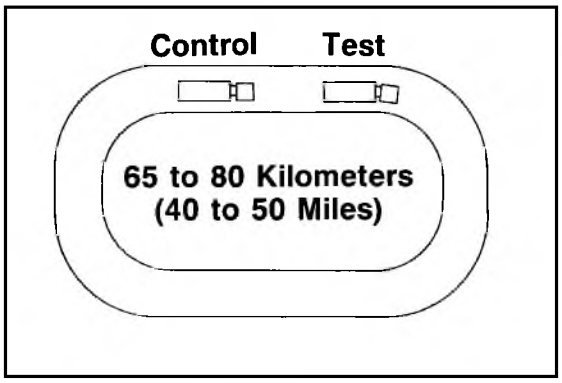

9. The test course **must** be 65 to 80 kilometers [40 to 50 miles] long.

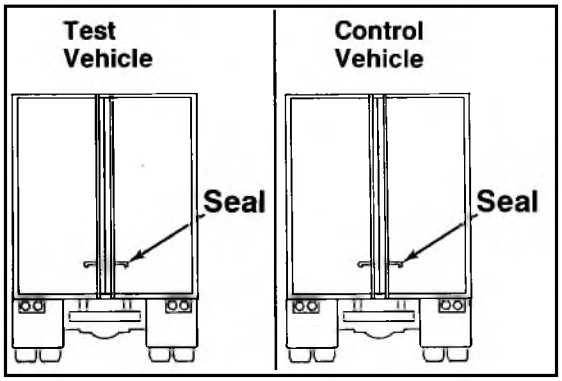

10. The test route and truck weights **must not** change during the test.

11. All of the test results are based on comparing the fuel used by the test truck to the fuel used by the control truck.

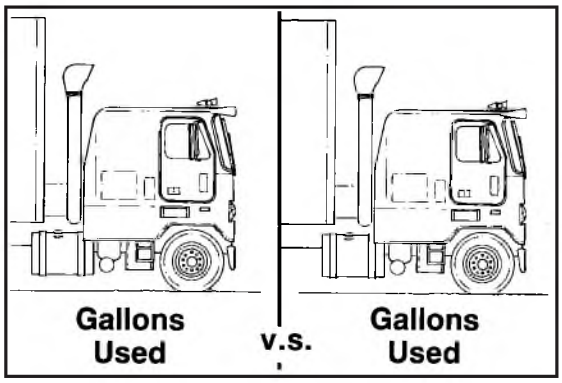

12. Drive the truck on a ''warm up'' test run. Drive enough tests to achieve:

    a. Difference in elapsed time between each test run can only be plus or minus 0.5 percent. This would be ±15 seconds on 80 kilometers [50 miles].

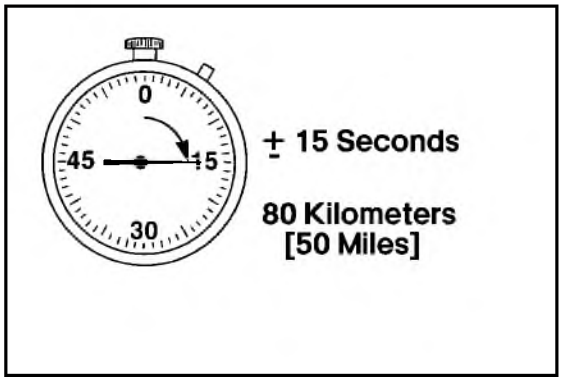

    b. The fuel usage of the test truck between test drives **must** fall within a 2 percent range, (6 mpg vs 6.12 mpg).

    c. The same range also applies between drives of the control truck.

NOTE: The differences in traffic and driving practices can make the test drive fall out of the 2 percent range.

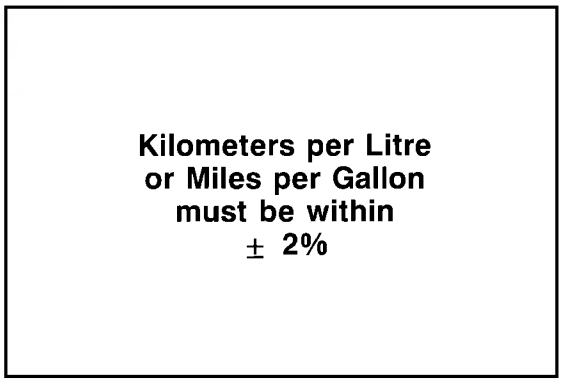

13. A minimum of three test drives that meet these conditions make a **valid** test. A single test drive is unreliable.

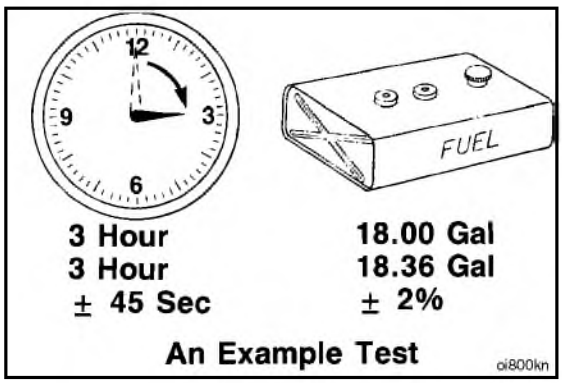

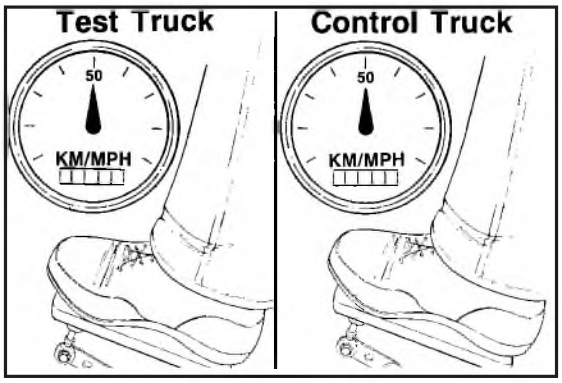

14. Use the same, experienced drivers for all of the tests.
    a. The vehicle speeds should be representative of a typical operation.

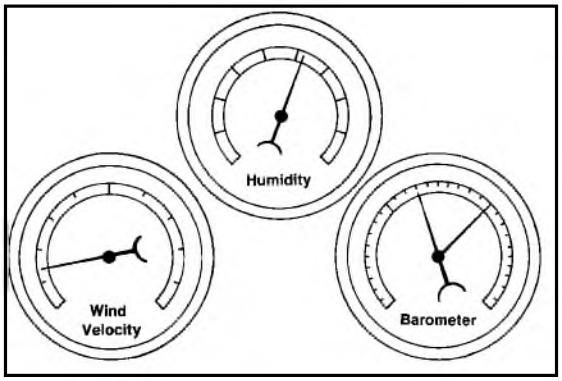

15. During the test, record the following:
    - Ambient temperature
    - Humidity
    - Barometric pressure
    - Wind velocity
    - Wind direction

NOTE: Avoid testing under any extreme conditions.

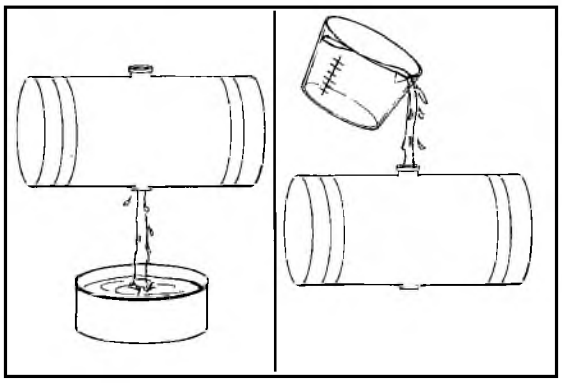

16. An alternate method of measuring fuel used is as follows:
    a. Drain the fuel tank.
    b. Add a measured amount of fuel to the tank.

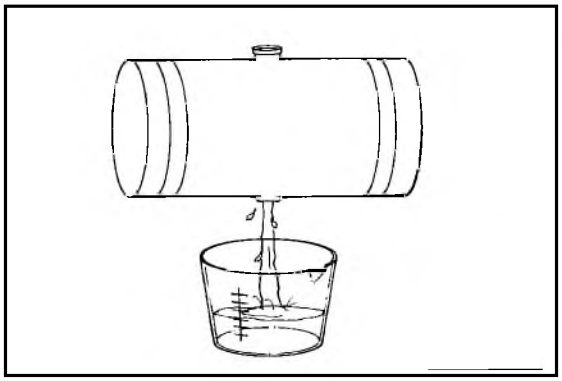

c. After the test, drain the tank into a calibrated container and subtract from the amount added in step b.

Low Power Check (5-17)

A complaint of Low Power is **not** sufficient to correct a problem unless a necessary and time-consuming investigation is made.

Refer to the Driveability - Low Power Check List in the rear of this Section.

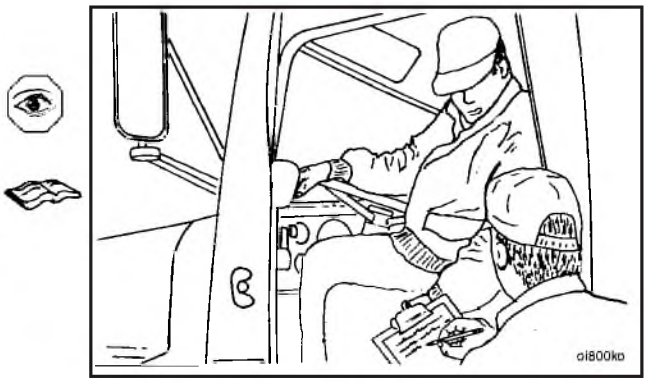

Ask the Operator:

1. Low power on level road?

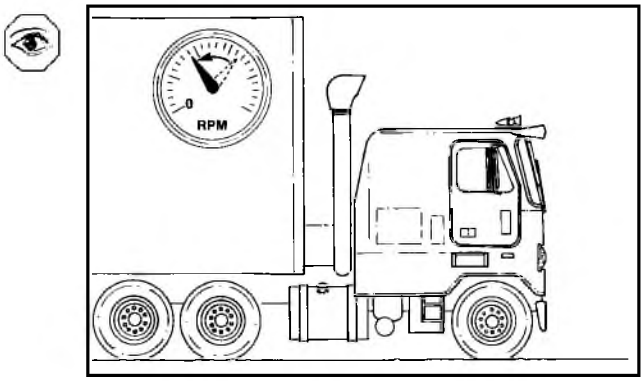

2. Low power uphill?

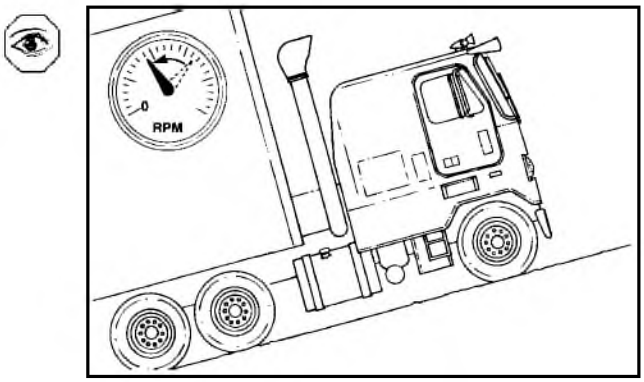

3. Low power after a shift?

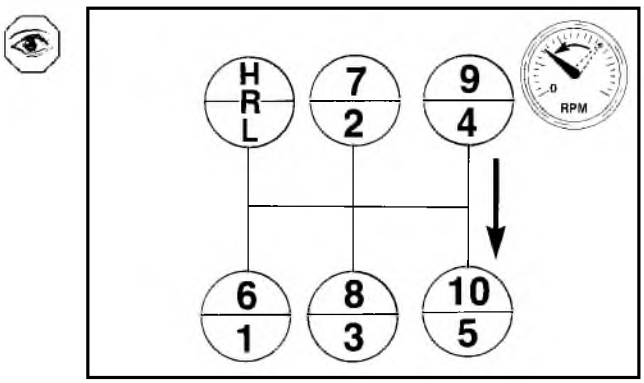

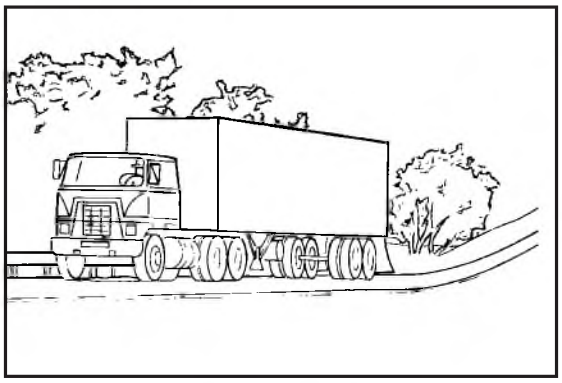

4. Low power or hesitation at bottom of hill after coasting?

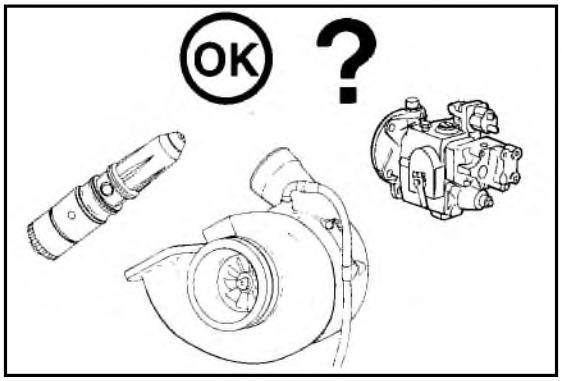

5. Are you sure the fuel system is at fault or something else?

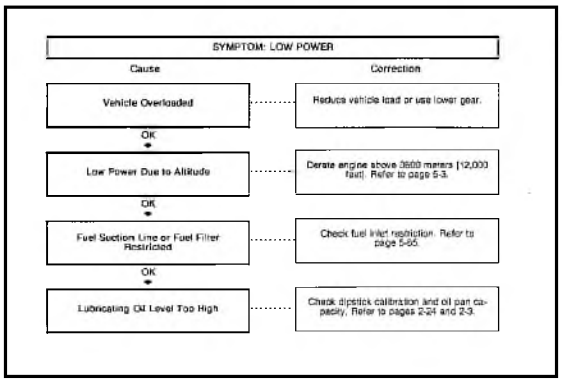

SYMPTOM: LOW POWER

Cause	Correction
Vehicle Overloaded	Reduce vehicle load or use lower gear.
OK	
Low Power Due to Altitude	Derate engine above 3600 meters (12,000 feet). Refer to page 5-3.
OK	
Fuel Suction Line or Fuel Filter Restricted	Check fuel inlet restriction. Refer to page 5-55.
OK	
Lubricating Oil Level Too High	Check dipstick calibration and oil pan capacity. Refer to pages 2-24 and 2-3.

6. Before any disassembly, refer to the Low Power Troubleshooting Chart and the Low Power Check List on page 83.

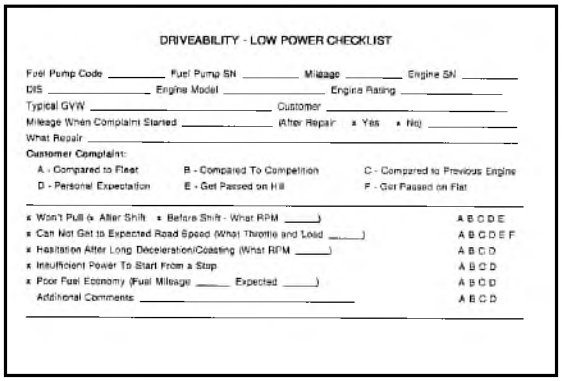

DRIVEABILITY - LOW POWER CHECKLIST

Fuel Pump Code _____ Fuel Pump SN _____ Mileage _____ Engine SN _____
DIS _____ Engine Model _____ Engine Rating _____
Typical GVW _____ Customer _____
Mileage When Complaint Started _____ (After Repair: x Yes x No) _____
What Repair _____

Customer Complaint:

A - Compared to Fleet B - Compared To Competition C - Compared to Previous Engine
D - Personal Expectation E - Get Passed on Hill F - Get Passed on Flat

x Won't Pull (x After Shift x Before Shift - What RPM _____)	A B C D E
x Can Not Get to Expected Road Speed (What Throttle and Load _____)	A B C D E F
x Hesitation After Long Deceleration/Coasting (What RPM _____)	A B C D
x Insufficient Power To Start From a Stop	A B C D
x Poor Fuel Economy (Fuel Mileage _____ Expected _____)	A B C D
Additional Comments: _____	A B C D

7. The checks will confirm the complaint and determine whether it is the fuel system or something else.

Throttle Response Time By Road Test (5-18)

See Procedure 5-19 for off-road vehicles.

1. Remove the plug and install the fuel pressure gauge, Part No. ST-435, in the fuel shutoff valve.

NOTE: Make sure to use the line, Part No. ST-435-1, furnished with the gauge. A stop watch is used with this test.

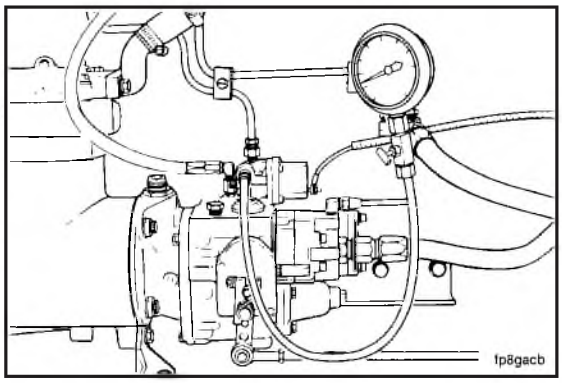

2. Remove the vehicle tachometer drive and install the digital tachometer, Part No. 3375631, on the fuel pump.

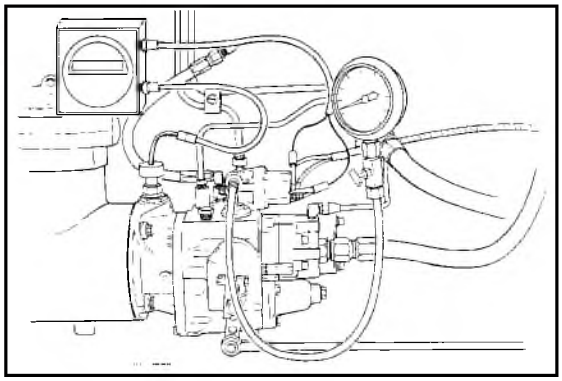

3. Operate the engine until it is at or above 70°C [160°F].

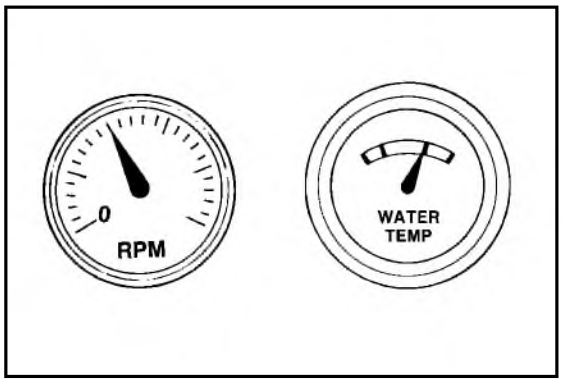

NOTE: The torque peak speed is usually the number one check point of the fuel pump calibration code.

1 Pump Code	**4147-C**
2 Date – Control Parts List	JUN85 0676
3 Test H.P. @ R.P.M.	392 - 408 @ 2100
4 Engine Fuel P.S.I.	172 - 190
5 Torque Rise % Curve	25
6 No Air Snaprail P.S.I.	
7 Fuel Rate Pound Per Hour	-
8 Auto. Gov. Setting	2130 - 2150
9 V.S. Gov. Setting	-
10 Max. Gov.Check R.P.M.-Psi	2457 - 15
11 Throttle Leakage - Cc-Pph	110
12 Throttle Travel	28
13 Idle Speed P.S.I. @ R.P.M.	36 @ 500
14 Idle Speed C.C. @ R.P.M.	210 @ 630
15 Intake Mfd. Press. In./Hg.	46 - 54
16 Calibration P.S.I. @ R.P.M.	181 @ 2100
17 Calibration Flow	505
18 Check Point (1) P.S.I. @ R.P.M.	117 - 125 @ 1300 ←
19 Check Point Flow	401
20 Check Point (2) P.S.I. @ R.P.M.	- @

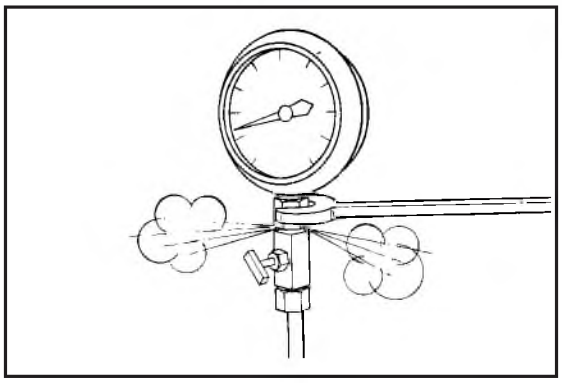

4. Make sure to remove all of air from the gauge and hose.

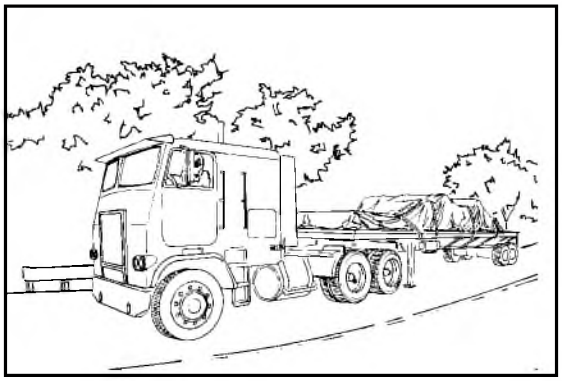

5. Drive the truck down a level road with a loaded trailer.

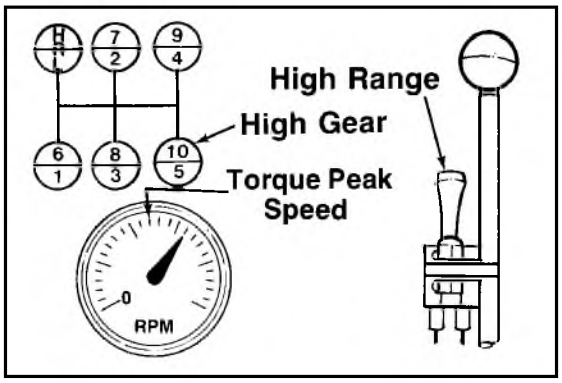

6. Drive the truck in high or top gear and above the torque peak speed to establish a target rail pressure.

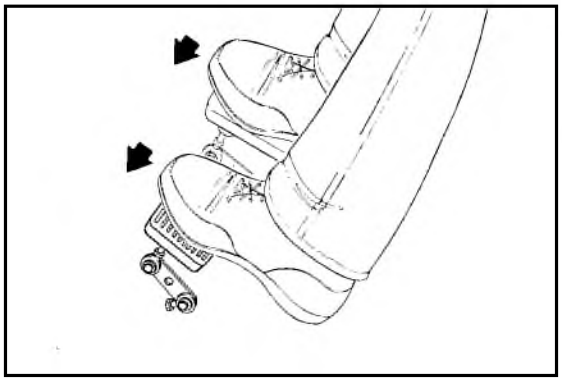

7. Engage the service brakes and put the throttle in wide open position.

8. Watch the engine RPM and the engine fuel pressure gauge for the torque peak reference points.
   a. Record the torque peak fuel rail pressure.
   b. Idle the engine.
   c. Release the service brakes.

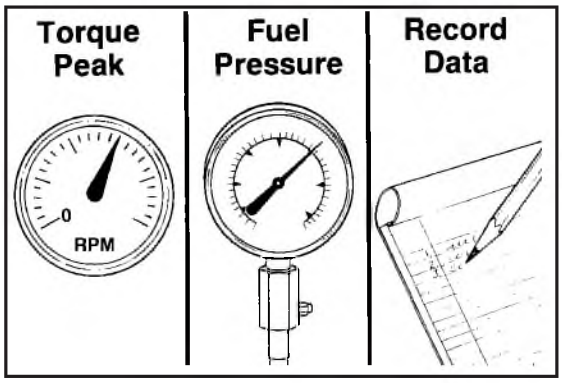

9. Multiply the fuel pressure times 85 percent to get the target rail pressure for the throttle response test.

   Example: 90 psi at 1300 RPM.
   90 X .85 = 76 psi at 1300 RPM.

Fuel Pressure × 85%
= Target Rail Pressure

90 psi × .85 = 76 psi

10. Drive the truck in the top gear and above the torque peak speed.

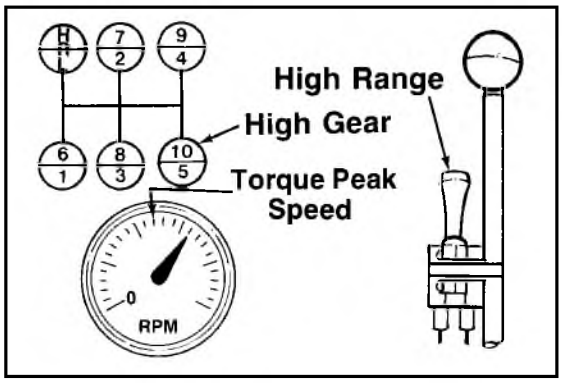

11. Remove foot from the throttle and coast 10 to 30 seconds to the torque peak RPM.

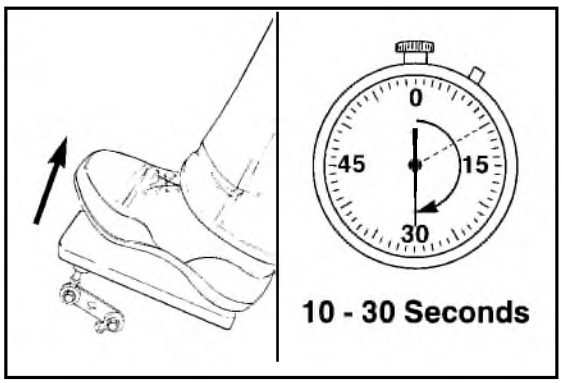

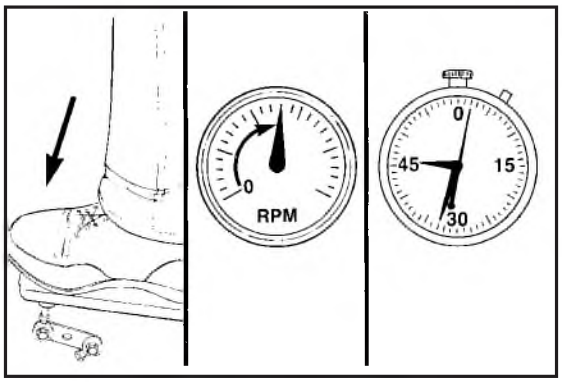

12. Accelerate the throttle to the wide open position and use a stop watch to check the time.

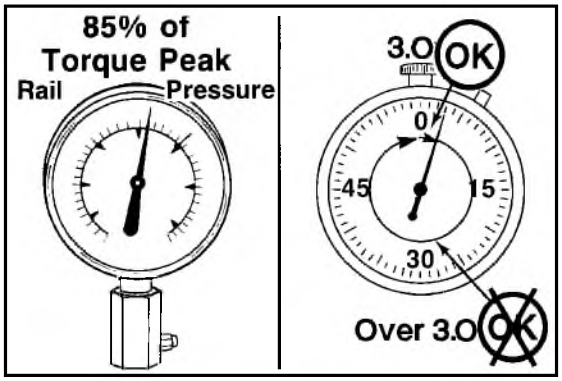

13. When the engine reaches target rail pressure, stop the stop watch.
14. The acceptable response time range is 3.5 seconds or less on engines built after January 1, 1984.

NOTE: The specifications are **not** available for engines built before January 1, 1984.

15. If the response time is over 3.5 seconds, refer to the ''Throttle Response Slow'' troubleshooting chart.

Engine Stall Speed And Time Check (5-19)

Converter Transmissions Stall Speed Check

1. The stall speed is the engine speed (RPM) obtained at full throttle when the converter output shaft is locked.
   a. The vehicle brakes may **not** hold an electronically controlled transmission.

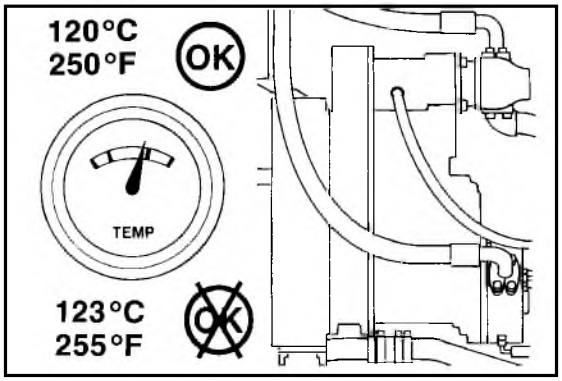

Caution: Do not exceed 120°C [250°F] converter oil temperature. If the oil temperature exceeds 120°C [250°F], put the transmission in neutral and operate the engine until the oil temperature is below 120°C [250°F]. Check the converter oil level.

2. The following equipment is needed for this check:

   - Stop watch
   - Digital tachometer, Part No. 3375631, or a hand held optical tachometer, Part No. ST-3377462.
   - Equipment manufacturer's stall speed and time to stall specifications

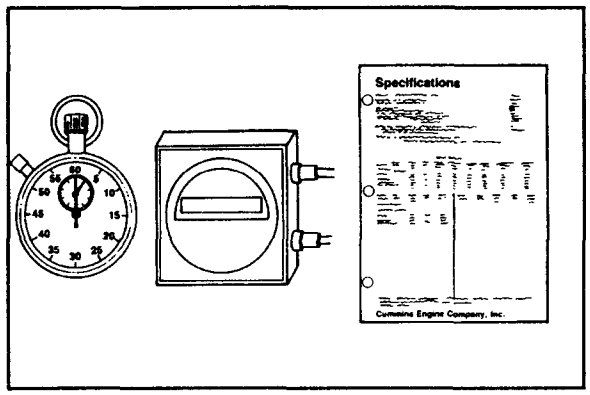

3. Install the tachometer on the fuel pump.

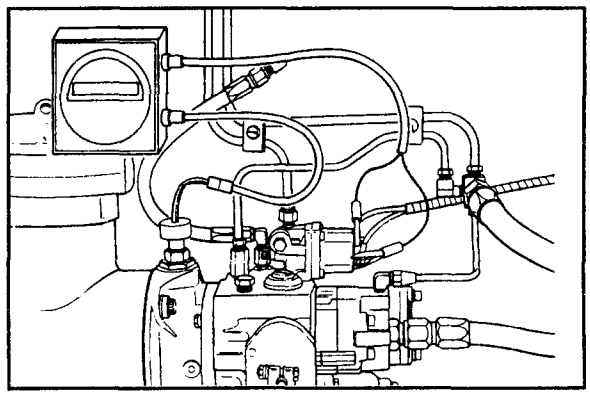

4. Place the gear selector in the highest gear or full forward.

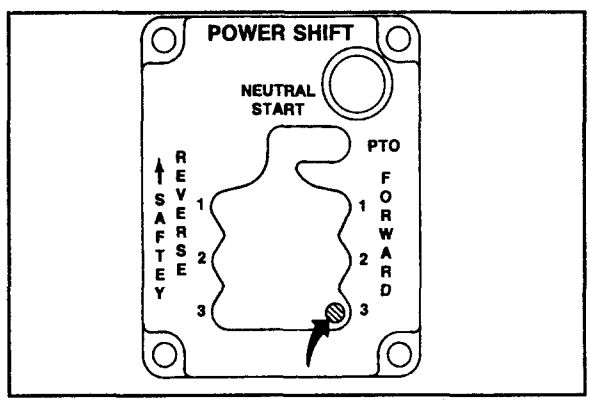

5. Make sure the vehicle has good brakes and air pressure in the brake system.

   a. The brakes **must** prevent the vehicle from moving when the engine is at full throttle.

   b. Engage the vehicle brakes or keep the vehicle from moving.

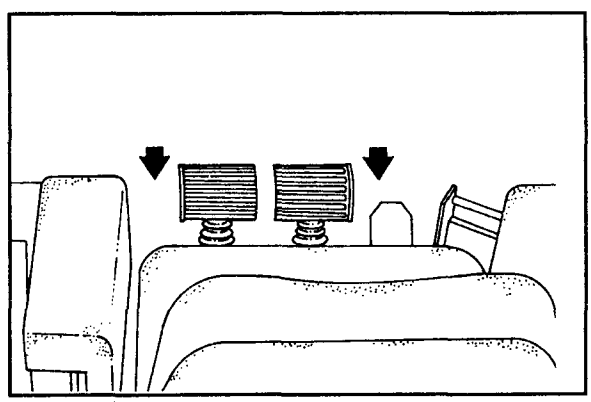

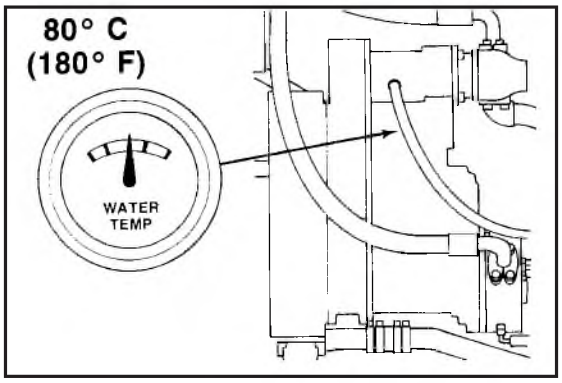

6. Operate the engine until it is up to 70°C [160°F] and the converter temperature is 80°C [180°F] or above.

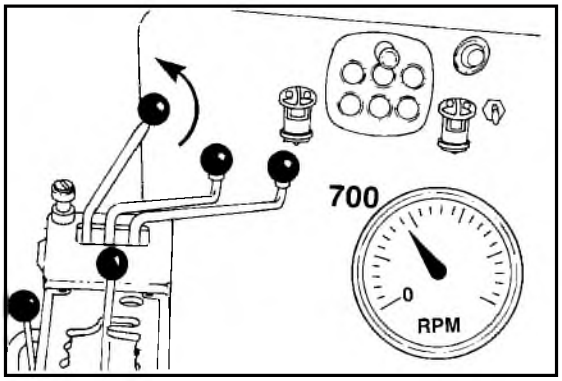

7. Bring the engine speed back to low idle.

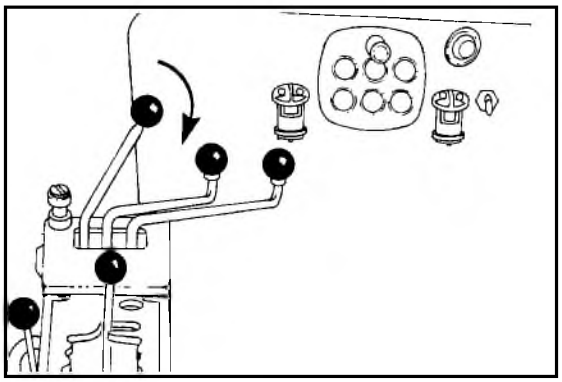

8. Quickly move the throttle to the full open position.

Caution: Do not exceed 120°C [250°F] converter oil temperature.

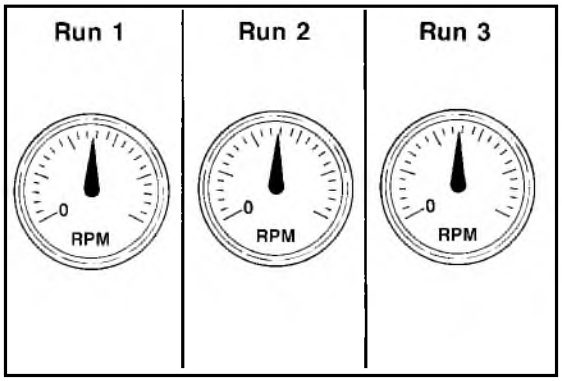

Check the engine speed (RPM) at the point of stall.

a. Always hold the speed until it is stable.

b. Take several readings. Make sure the reading is accurate.

9. Check the stall speed (RPM) against the specifications that are for the equipment, converter, or automatic transmission.

NOTE: The stall speed for the engine and converter/ transmission can vary ±8% from the manufacturer's specifications.

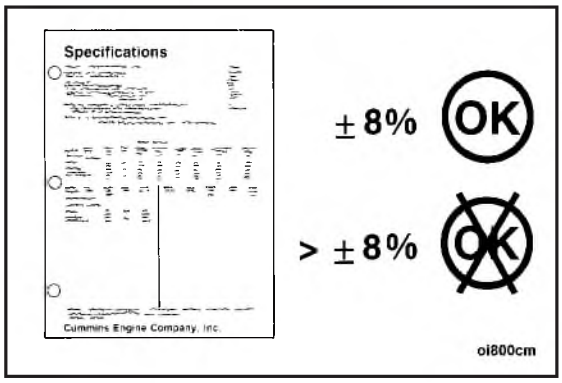

10. If the stall speed is **not** within the specifications, refer to the Stall Speed Check List. Refer to page 81.
11. Check the equipment manufacturer's troubleshooting procedures for other reasons for stall speed problems.

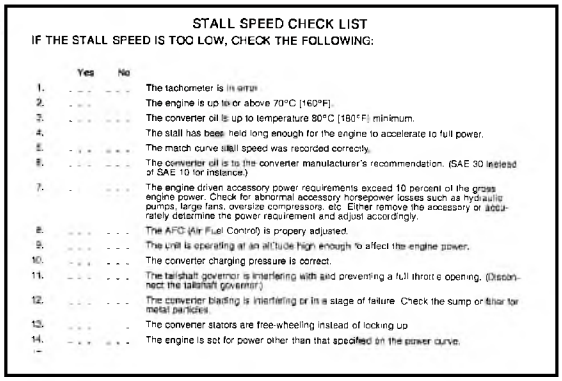

STALL SPEED CHECK LIST

IF THE STALL SPEED IS TOO LOW, CHECK THE FOLLOWING:

	Yes	No	
1.	. . .	. . .	The tachometer is in error.
2.	. . .	. . .	The engine is up to or above 70°C [160°F].
3.	. . .	. . .	The converter oil is up to temperature 80°C [180°F] minimum.
4.			The stall has been held long enough for the engine to accelerate to full power.
5.	. . .	. . .	The match curve stall speed was recorded correctly.
6.	. . .	. . .	The converter oil is to the converter manufacturer's recommendation. (SAE 30 instead of SAE 10 for instance.)
7.	.	. . .	The engine driven accessory power requirements exceed 10 percent of the gross engine power. Check for abnormal accessory horsepower losses such as hydraulic pumps, large fans, oversize compressors, etc. Either remove the accessory or accurately determine the power requirement and adjust accordingly.
8.	. . .	. . .	The AFC (Air Fuel Control) is propery adjusted.
9.	. . .	. . .	The unit is operating at an altitude high enough to affect the engine power.
10.	. . .	. . .	The converter charging pressure is correct.
11.	. . .	. . .	The tailshaft governor is interfering with and preventing a full throttle opening. (Disconnect the tailshaft governor.)
12.	. . .	. . .	The converter blading is interfering or in a stage of failure. Check the sump or filter for metal particles.
13.	. . .	.	The converter stators are free-wheeling instead of locking up
14.	. . .	. . .	The engine is set for power other than that specified on the power curve.

12. Adjust the throttle shaft plunger screw, if necessary, to change the stall speed. Refer to Procedure 5-05.

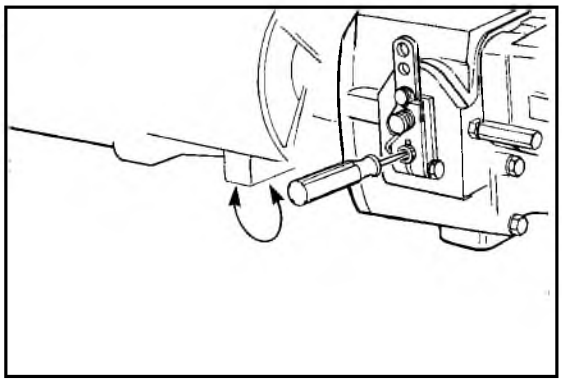

Time To Stall Or Acceleration Time Check

1. Perform steps 1 through 9 under "Stall Speed Check."
2. Calculate the engine stall speed.

   Example: Stall speed 2089, (2089 x .90 = 1880 RPM).

Stall Speed X 90%
=Stall Speed Reference Point

Example:
2089RPM X .90 = 1880RPM

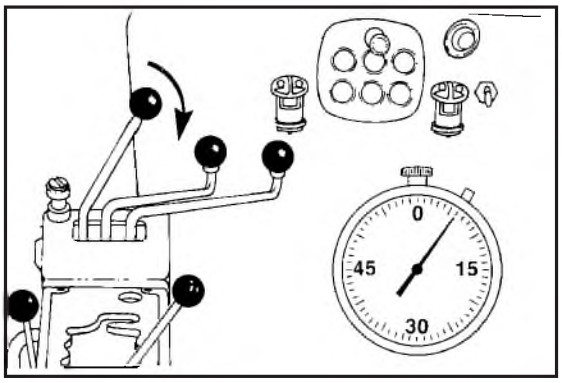

3. Quickly move the throttle to the full open position and start the stop watch at the same time.

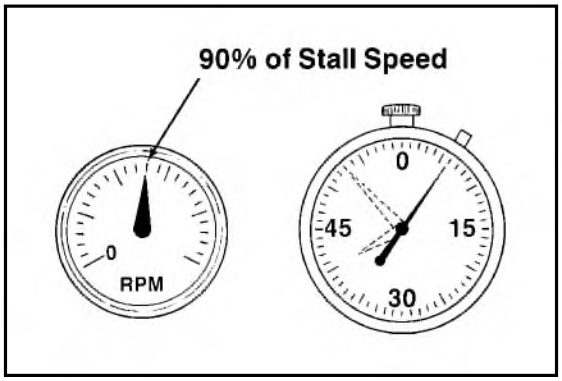

4. When the engine speed is 90% of the stall speed RPM, stop the stop watch.

NOTE: The type of unit and the stall speed RPM can make the stall speed time a maximum of 10 seconds.

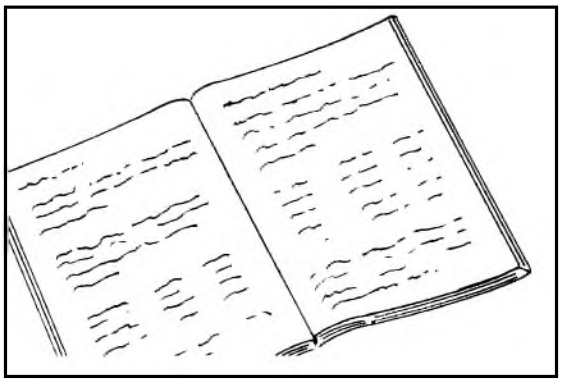

5. Check the equipment manufacturer's specifications for the time to stall or the acceleration time.
6. If the time is excessive, check the fuel pump AFC for an air leak. Refer to Procedure 5-12 and the Stall Speed Time Check List on page 81.

Stall Speed Check List

If The Stall Speed Is Too Low, Check The Following:

	Yes	No	
1.	_____	_____	The tachometer is in error.
2.	_____	_____	The engine is up to or above 70°C [160°F].
3.	_____	_____	The converter oil is up to temperature 80°C [180°F] minimum.
4.	_____	_____	The stall has been held long enough for the engine to accelerate to full power.
5.	_____	_____	The match curve stall speed was recorded correctly.
6.	_____	_____	The converter oil is to the converter manufacturer's recommendation. (SAE 30 instead of SAE 10 for instance.)
7.	_____	_____	The engine driven accessory power requirements exceed 10 percent of the gross engine power. Check for abnormal accessory horsepower losses such as hydraulic pumps, large fans, oversize compressors, etc. Either remove the accessory or accurately determine the power requirement and adjust accordingly.
8.	_____	_____	The AFC (Air Fuel Control) is properly adjusted.
9.	_____	_____	The unit is operating at an altitude high enough to affect the engine power.
10.	_____	_____	The converter charging pressure is correct.
11.	_____	_____	The tailshaft governor is interfering with and preventing a full throttle opening. (Disconnect the tailshaft governor.)
12.	_____	_____	The converter blading is interfering or in a stage of failure. Check the sump or filter for metal particles.
13.	_____	_____	The converter stators are free-wheeling instead of locking up.
14.	_____	_____	The engine is set for power other than that specified on the power curve.
15.	_____	_____	The converter is wrong, due to improper build or rebuild of unit.
16.	_____	_____	The converter is performing to the published absorption curve.
17.	_____	_____	The engine and converter match is correct. Check the engine and converter models for the proper match.
18.	_____	_____	The engine is matched to too large a converter. (If this condition is believed to exist, please report the engine-converter-accessory information to the Factory.)
19.	_____	_____	The engine power is down. (The engine torque rise could be less than shown on the standard engine curve.) See the fuel setting adjustments and the turbocharger air manifold pressure check.

It is sometimes easier to change the engine fuel rate than to determine the true cause for low stall speed, but the customer ends up with an over-fueled engine which will also negatively affect durability. Do not increase the fuel rate as a ''cure-all.''

If The Stall Speed Is Too High, Check The Following:

	Yes	No	
1.	_____	_____	The engine is high in power.
2.	_____	_____	The tachometer is in error.
3.	_____	_____	The accessory power requirements are less than 10 percent of the gross engine power.
4.	_____	_____	The converter oil is aerating (foaming) - check for low oil level, air leaks in suction line, oil does **not** contain a foam inhibitor, or suction screen or filter. (Should be accompanied by a noticeable loss of machine performance.)
5.	_____	_____	The converter is being held at full stall. Check for a slipping front disconnect clutch or a rotating output shaft. On the converter-transmission package, this may be impossible to check.
6.	_____	_____	The converter turbine element is beginning to fail and losing blades or the converter was originally built with the wrong size element.
7.	_____	_____	The engine and converter match is correct. (Due to a revision in the engine rating or the converter performance.)
8.	_____	_____	On the transmission-converter units with oil sump in the transmission, if the oil level is too high, it may cause severe aeration due to parts dipping in the oil.
9.	_____	_____	The converter is performing to the published absorption curve.
10.	_____	_____	The converter charging pressure is correct.

The reasons for abnormal stall speeds listed above are some which have been encountered by Cummins representatives and probably do **not** include all possible causes. The correction of the problem is either covered in the vehicle service manual, the converter service manual, or is self-explanatory.

Driveability - Low Power Check List

Fuel Pump Code _____ Fuel Pump SN _____ Mileage _____ Engine SN _____

DIS _____ Engine Model _____ Engine Rating _____

Typical GVW _____ Customer _____

Mileage When Complaint Started _____ (After Repair Yes No) _____

What Repair _____

Customer Complaint:

A - Compared to Fleet B - Compared To Competition C - Compared to Previous Engine

D - Personal Expectation E - Get Passed on Hill F - Get Passed on Flat

Won't Pull (After Shift Before Shift - What RPM _____)	A B C D E
Can **Not** Get to Expected Road Speed (What Throttle and Load _____)	A B C D E F
Hesitation After Long Deceleration/Coasting (What RPM _____)	A B C D
Insufficient Power To Start From a Stop	A B C D
Poor Fuel Economy (Fuel Mileage _____ Expected _____)	A B C D
Additional Comments _____	A B C D

Truck Specifications

Tractor Year/Type/Model _____ Trailer Type and Size _____

Transmission (RT14609, etc.) _____ Rear Axle Ratio _____

Tires (11R X 24.5, Low Profile, etc.) _____

Thermatic Fan Drive	Yes	No	Air Conditioner	Yes	No
Power Steering	Yes	No	Air Shield	Yes	No

Typical Terrain - Flat, Hilly, % Asphalt, % Concrete, Cruise Speed _____

Possible Chassis Related Items

Tank Vents _____ Obvious Fuel Leaks _____

Brake Drag _____ Axle Alignment _____

This Page Can Be Copied For Your Convenience.

Engine Factors (Use Dynamometer Sheet Included Below)

Air Inlet Restriction _____ (Spec: 25″ Water, 1.8” Hg. @ Rated Speed & Load)

Exhaust Restriction _____ (Spec: 40″ Water, 3″ Hg. @ Rated Speed Load)

Fuel Inlet Restriction _____ (Spec: 4″ Hg. Clean, 8″ Hg. Dirty @ Rated Speed Load)

Fuel Drainline Restriction _____ (Measure at Junction Block Where Flexible Line Goes to Tank. Spec: 34″ Water or 2.5 Hg. Maximum @ Rated Speed Load)

Record Governor Break RPM _____ Check Oil Level Low High OK

Install Sight Glass in Fuel Inlet Line Directly Before Pump, Watch for Air

AFC No Air Rail Pressure @ 1600 RPM (Disconnect Air Line From Intake Manifold to AFC; Plug Intake Manifold) _____

ENGINE SPEED (RPM)			RAIL	*FUEL MANIFOLD	INTAKE WHEEL
DYNO	UNIT TACH	RATE (PPH)	PRESSURE (PSI)	PRESSURE (PSI)	HORSE POWER

* Be Sure That Fuel Rate is Corrected for Temperature.

This Page Can Be Copied For Your Convenience.

Fuel Consumption Check List

Excessive fuel consumption is hard to find. Ask the operator or user the following questions. The questions will help in determining the cause.

By analysis of the present operating practices, it can be determined what changes can be made to improve fuel consumption. Be sure to use the vehicle, engine and the driveability, low power, fuel economy check list that follow.

_____ Mileage Expected

_____ Expectations based upon?

- _____ Other units in fleet
- _____ Competitive Engines
- _____ Previous engine owned
- _____ Was passed on hill
- _____ Was passed on flat
- _____ Expectations only

_____ Weather conditions during check?

- _____ Rain _____ Windy
- _____ Snow _____ Windy
- _____ Hot Temperature
- _____ Cold Temperature

_____ Loads compared to comparison unit:

- _____ Higher _____ Lower _____ Same

_____ Idle Time

_____ How is mileage calculated:

_____

_____

_____

_____ Operating Practices:

- _____ High Road Speed
- _____ Shift RPM
- _____ Operate at rated speed or above
- _____ Cruise Speed
- _____ Believe compensating for low power
- _____ MPH
- _____ Torque Peak

This Page Can Be Copied For Your Convenience.

Fuel Consumption Check List

(Vehicle Factors)

Engine versus vehicle specification can be based upon economy or fast trip schedules which will **not** produce what the owner desires. An analysis can often point out a compromise to more closely fit the current requirements.

_____ Engine Rated Speed _____ Horsepower

_____ Type Trailer _____

_____ Type Tires

_____ Bias _____ Std. Tread _____ Extra Tread

_____ Radial _____ Std. Tread

_____ Axle _____ Single _____ Dual

_____ Axle Ration _____

_____ Transmission _____

_____ Gross Vehicle Weight _____

_____ Wind Deflectors _____ Yes _____ No

_____ Pavement Operated On _____

_____ Fan Drive _____ Full Time _____ Variable

_____ Freon Compressor _____ Yes _____ No

_____ Power Steering _____ Yes _____ No

_____ Axle Alignment _____ Recent _____ Never

_____ Fuel Line Leaks

_____ Fuel Tank Vents

(**Must not** pressurize tank above 65 mm Hg [2.5 inch/mercury]

_____ Brake Drag

This Page Can Be Copied For Your Convenience.

Fuel Consumption Check List

(Engine Or Fuel System Factors)

Be sure to use this check list with the troubleshooting charts in the front of the book or the driveability, low power, fuel economy check list. Engine factors other than those related to the fuel system are covered in the other sections of this manual.

_____ Engine fuel pressure. Refer to Procedure 5-05.

_____ Engine fuel rate. Refer to Procedure 5-15.

_____ Turbocharger air pressure. Refer to Procedure 5-05.

_____ Fuel inlet restriction. See Low Power Chart.

_____ Fuel drain restriction. See the Specifications page.

_____ Air inlet restriction. Refer to Procedure 3-08.

_____ Exhaust restriction. Refer to Procedure 3-09.

_____ Fuel Temperature. See the Specifications page.

_____ Poor engine response. Refer to Procedure 5-18.

_____ Excessive Exhaust Smoke. Refer to the Troubleshooting Charts.

This Page Can Be Copied For Your Convenience.

Section 6 - Electrical System

Section Contents

	Reference No.	Page No.
General Information	6-01	2
Specifications	6-02	3
Service Tools	6-03	4

System Troubleshooting and Repair List

	Procedure No.	Page No.
Alternator - Output Test	6-08	13
Alternator - Replace	6-09	15
Alternator Belt - Adjust	6-07	12
Batteries - Check	6-04	5
Battery Terminals - Check	6-05	6
Starting Circuit - Check	6-06	6
Starting Motor - Replace	6-10	17

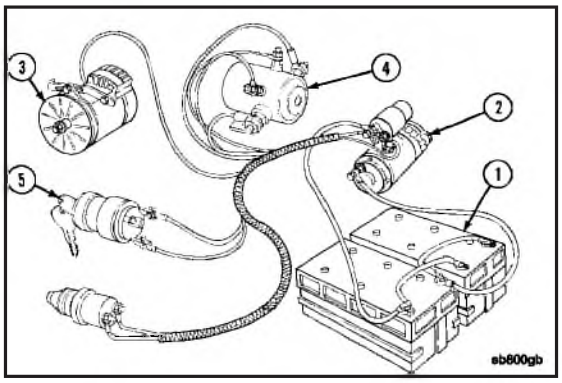

General Information - (6-01)

The basic heavy-duty electrical system consists of:

- Batteries (1) (usually three or four connected in parallel).
- A starting motor (2).
- An alternator (3).
- A magnetic switch (4).
- An ignition switch (5).
- All necessary wiring.

All components **must** be carefully matched.

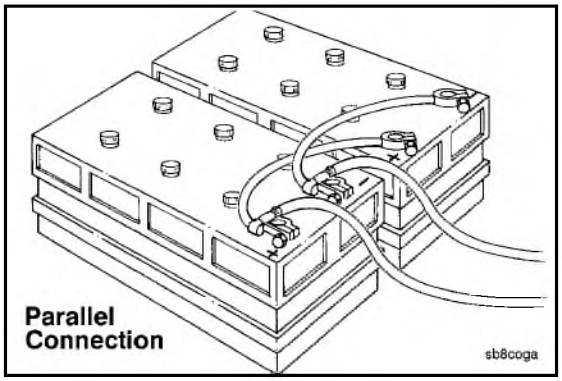

The accompanying illustrations show typical parallel and series battery connections.

1. Parallel connection

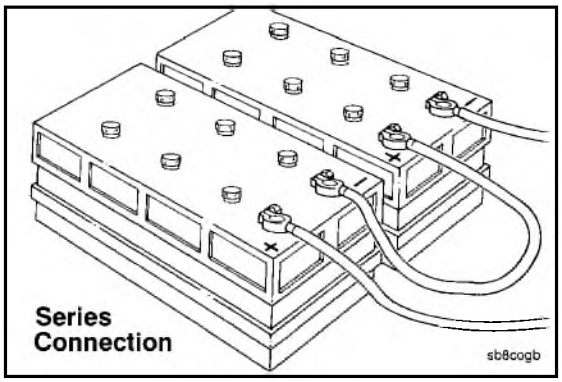

2. Series connection

Electrical System Specifications - (6-02)

Minimum Battery Capacity @ -18 to 0°C (0 to 32°F) ambient temperature
12-volt starter ---------- 400 ampere hour - 1800 cold cranking amps @ -18°C (0°F)
24-volt starter---------- 200 ampere hour - 900 cold cranking amps @ -18°C (0°F)

Minimum Battery Capacity above 0°C (32°F) ambient temperature
12-volt starter ---------- 300 ampere hour - 1280 cold cranking amps @ -18°C (0°F)
24-volt starter---------- 150 ampere hour - 640 cold cranking amps @ -18°C (0°F)

Maximum Starting Circuit Resistance
12-volt starter ..... 0.00075 OHMS
24-volt starter ..... 0.00200 OHMS

Battery Cable Sizes - American Wire Gauge (Maximum length in cranking motor circuit)

12-Volt
No. 00 ..... 3.7 Meters (12 Feet)
No. 000 ..... 4.9 Meters (16 Feet)
No. 0000 or Two No. 0* ..... 6.1 Meters (10 Feet)
Two No. 00 ..... 7.6 Meters (25 Feet)

12-Volt High Output
No. 00 ..... 2.1 Meters (7 Feet)
No. 000 ..... 2.7 Meters (9 Feet)
No. 0000 or Two No. 0* ..... 3.7 Meters (12 Feet)
Two No. 00 ..... 4.3 Meters (14 Feet)

24 to 32-Volts
No. 00 ..... 6.1 Meters (20 Feet)
No. 000 ..... 8.2 Meters (27 Feet)
No. 0000 or Two No. 0* ..... 10.7 Meters (35 Feet)
Two No. 00 ..... 13.7 Meters (45 Feet)

Minimum ambient temperature without starting aid---------- Refer to the following chart
Minimum cranking speed without starting aid ---------- 150 RPM

* Two strands of No. 0 cable may be used in place of one No. 0000 cable providing all connections are carefully made to ensure equal current flow in each parallel cable.

Refer to the following chart to determine the temperature for which a cold weather starting aid is required:

NOTE: Starting aids such as block heaters, lubricating oil pan heaters, etc., are available to aid in cold weather starting.

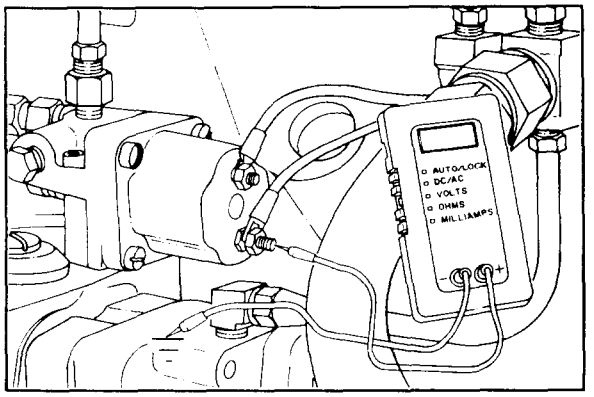

Cummins Service Tools - (6-03)

Part No. 3376898 Digital Multimeter

NOTE: Used to measure voltage (volts) and resistance (ohms) in a circuit.

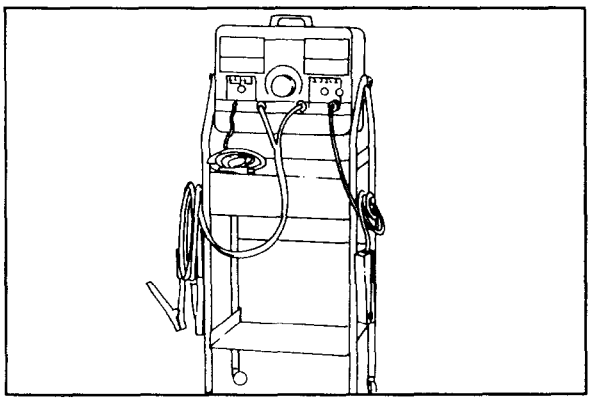

Part No. 3377193 Inductive Charging - Cranking Systems Analyzer

NOTE: Used to test generators, alternators, relays, starters, regulators and batteries. Contains built-in volt meter and ammeter.

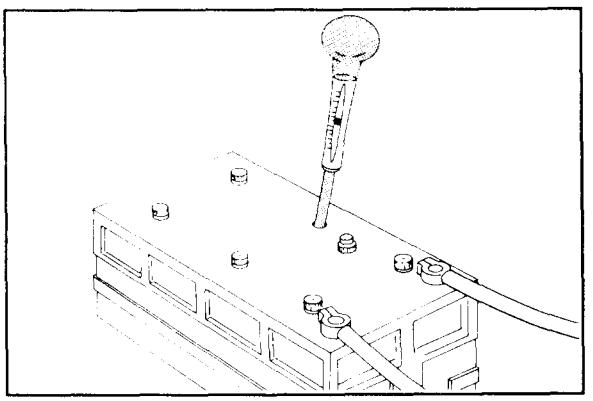

Other Tools

Battery Hydrometer

NOTE: Used to check specific gravity of individual battery cells (for batteries with removable cell caps or covers).

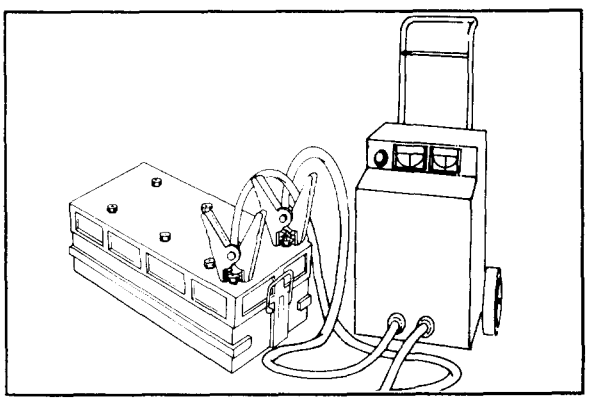

Battery Charger

NOTE: Used to restore the state of charge of a battery.

Batteries - Check (6-04)

1. If conventional batteries are used, remove the cell caps or covers and check the electrolyte (water and sulfuric acid solution) level.

NOTE: Maintenance-free batteries are sealed and do **not** require the addition of water.

2. Fill each battery cell with water. Refer to the manufacturer's specifications

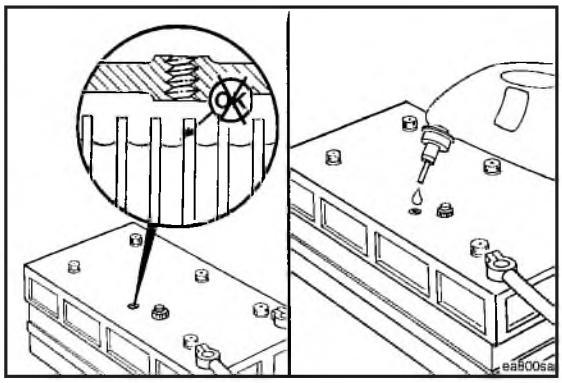

3. Use a hydrometer to measure the specific gravity of each cell.

NOTE: If the specific gravity of any or all of the cells is below 1.200, the battery **must** be charged.

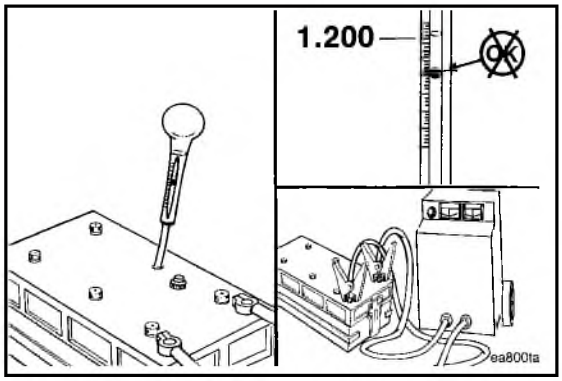

4. Refer to the accompanying chart to determine the battery state-of-charge based on the specific gravity readings.

Battery State of Charge	Specific Gravity @ 27°C [80°F]
100%	1.260-1.280
75%	1.230-1.250
50%	1.200-1.220
25%	1.170-1.190
Discharged	1.110-1.130

ea800ka

5. Use Part No. 3377193 analyzer to load test the state-of-charge of maintenance free batteries. If the state-of-charge is low, use a battery charger to charge the battery. Refer to the manufacturers instructions. Replace the battery if it will **not** charge to the manufacturer's specifications or will **not** maintain a charge.

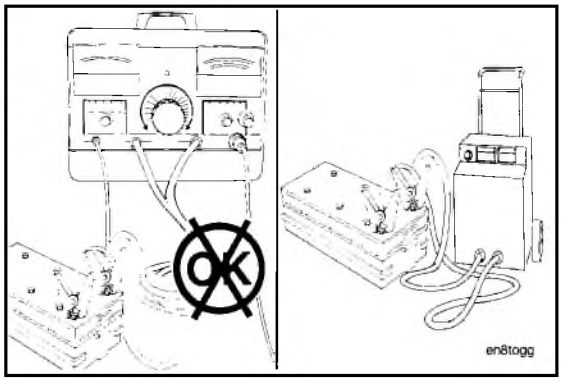

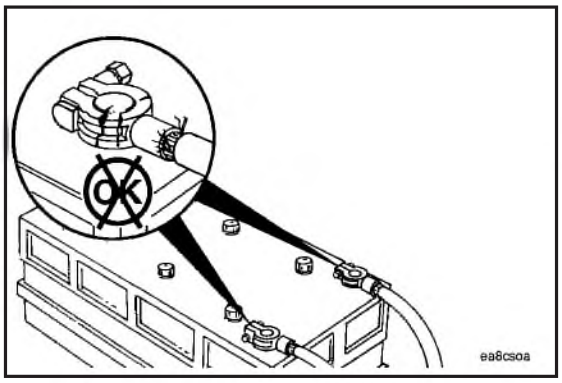

Battery Terminal Connections - Check (6-05)

1. Visually inspect the battery terminals for loose, broken, or corroded connections.
2. Repair or replace broken cables or terminals.

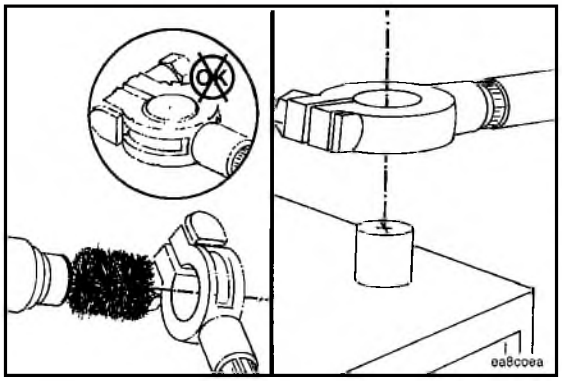

3. If the connections are corroded, remove the cables and use a battery brush to clean the cable and battery terminals.
4. Install and tighten the battery cables.
5. Use grease to coat the battery terminals to prevent corrosion.

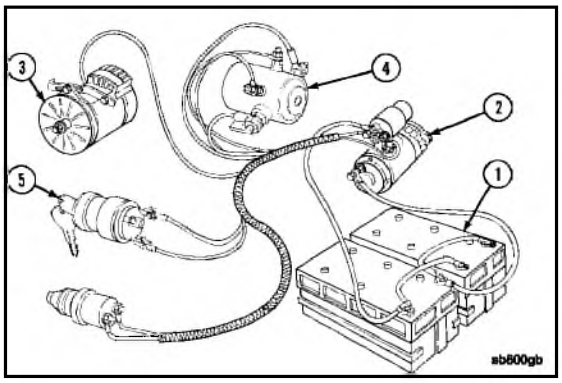

Starting Circuit - Check (6-06)

1. The starting circuit includes the batteries, starting motor, alternator, magnetic switch, ignition switch, and connecting wiring.

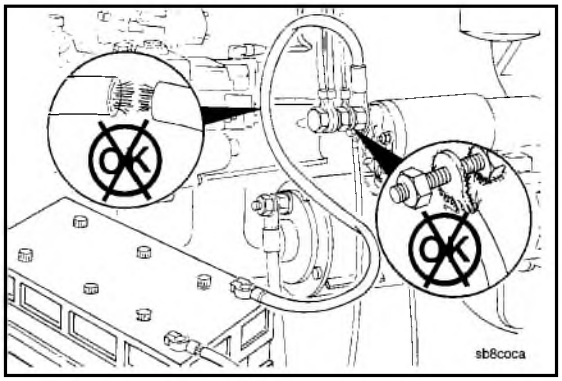

2. Before checking specific starting system components with the multimeter,
   a. visually inspect terminals for loose, broken, or corroded connections, and
   b. repair or replace broken wires or terminals.

Magnetic Switch - Check

Warning: Be sure the starter switch is in the ''OFF'' position to prevent electrical shock and personal injury.

1. Remove the cable connecting the magnetic switch to the starter solenoid from the magnetic switch terminal.
2. Connect the leads of Part No. 3376898 Digital Multimeter to the two large switch terminals.

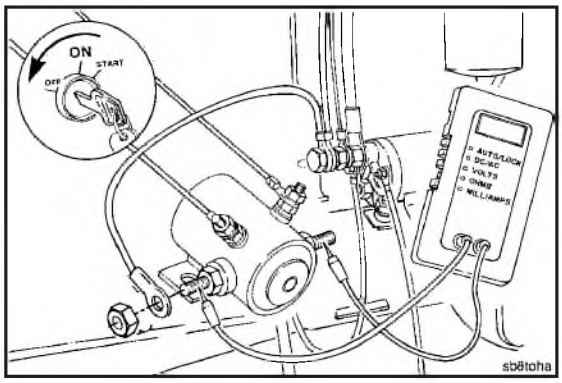

3. Set the multimeter to measure resistance (OHMS).
4. With the starter switch in the ''OFF'' position, the multimeter **must** indicate resistance at infinity.
5. Turn the starter switch to the ''START'' position.
6. The multimeter **must** indicate zero (''0'') or very little resistance.

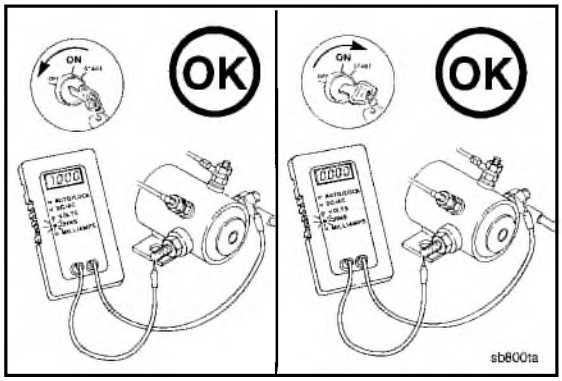

7. If the multimeter indicates resistance at infinity with the starter switch in the ''START'' position:
   a. Turn the starter switch to the ''OFF'' position.
   b. Set the multimeter scale to read DC voltage.

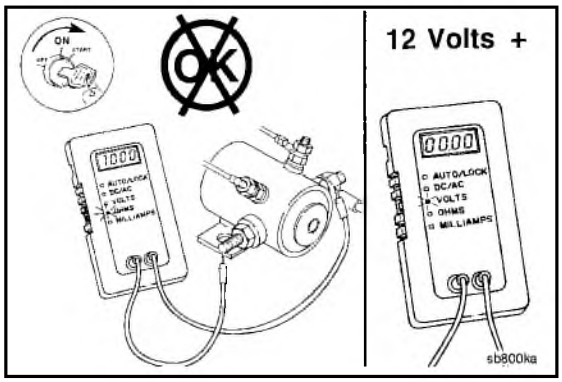

   c. Connect one multimeter lead to the magnetic switch ground wire terminal and the other lead to the other small magnetic switch terminal.
   d. Turn the starter switch to the ''START'' position.
   e. If the multimeter indicates system voltage, the magnetic switch is malfunctioning and **must** be replaced.

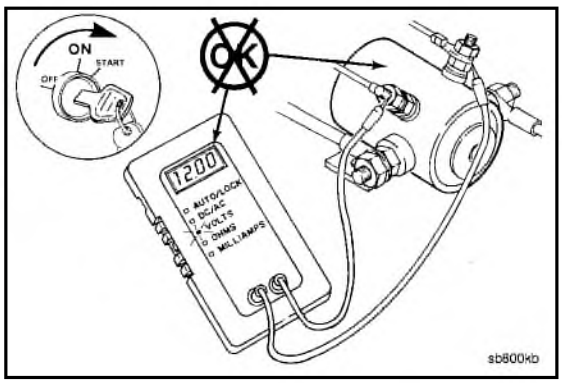

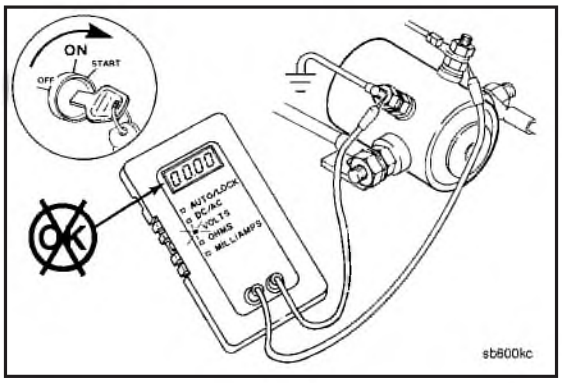

f. If the multimeter indicates no voltage, the magnetic switch is not the cause of the complaint. Refer to ''Starter Switch - Check'' in this Procedure.

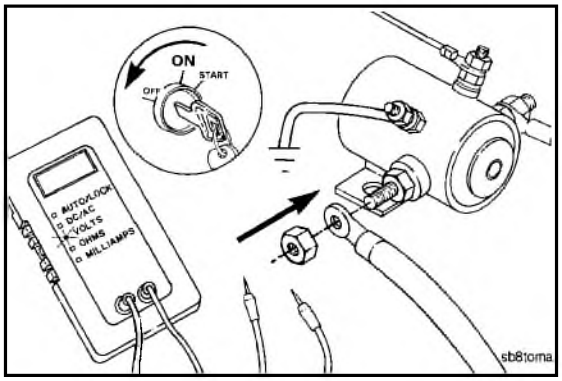

g. Turn the starter switch to the ''OFF'' position.

h. Remove the multimeter leads and connect the magnetic switch to starter solenoid wire.

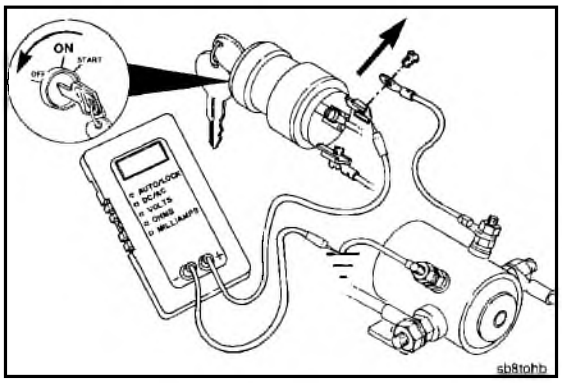

Starter Switch - Check

Warning: Be sure the starter switch is in the ''OFF'' position to prevent electrical shock and personal injury.

1. Remove the wire connecting the starter switch to the magnetic switch from the starter switch terminal.
2. Connect the positive lead of Part No. 3376898 Digital Multimeter to the starter switch terminal and the negative lead to a chassis or engine ground location.

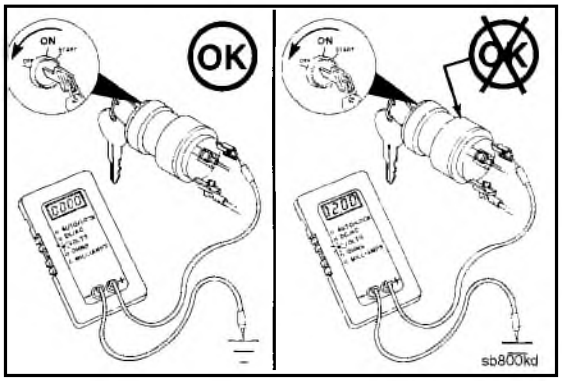

NOTE: With the starter switch in the ''OFF'' position, there **must not** be voltage at the starter switch terminal. If the meter indicates voltage, the starter switch is malfunctioning and **must** be replaced.

3. Turn the starter switch to the ''START'' position.
4. The multimeter **must** indicate system voltage.

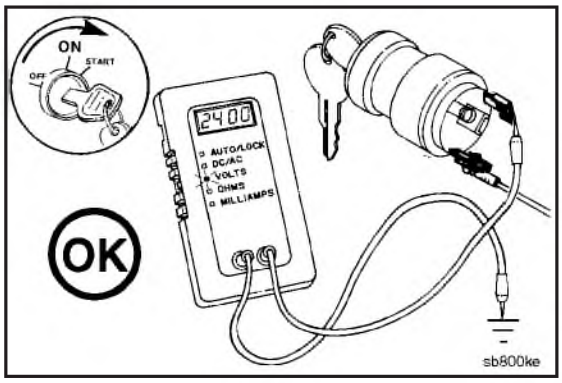

5. If there is no voltage:
   a. Turn the starter switch to the ''OFF'' position.
   b. Connect the multimeter positive lead to the starter switch terminal having a wire connecting the starter switch to the starter solenoid.

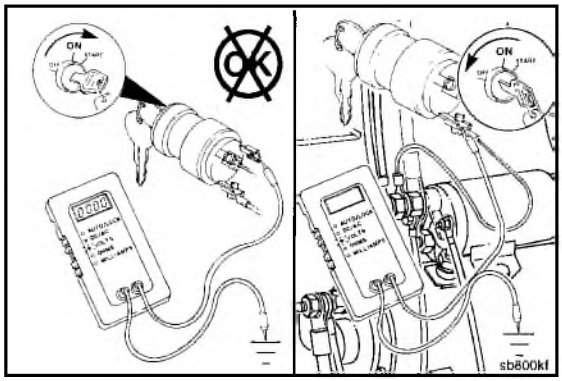

6. If the meter indicates system voltage, the starter switch is defective and **must** be replaced.

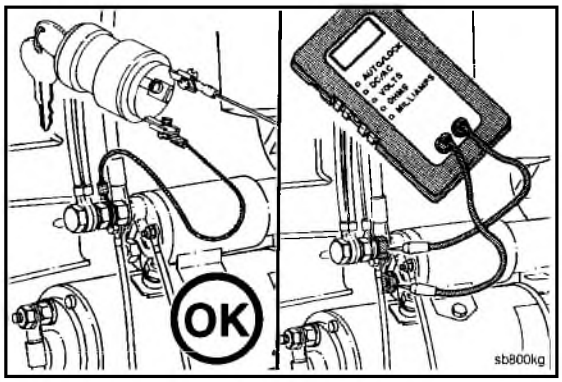

7. If the meter indicates no voltage, the switch is **not** the cause of the complaint.

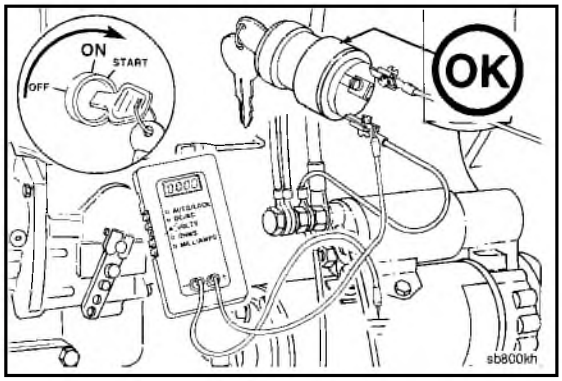

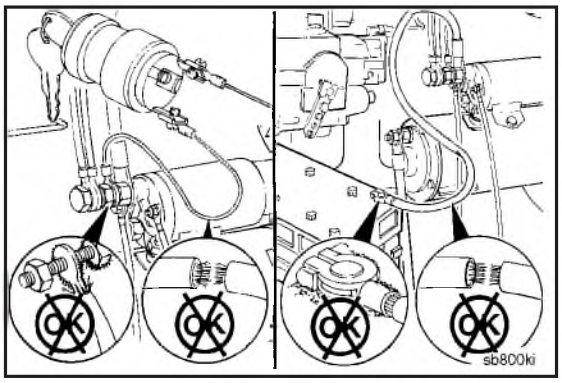

8. Check the wiring from the starting switch to the starter solenoid and from the starter solenoid to the battery.

   Replace any broken or damaged wires.

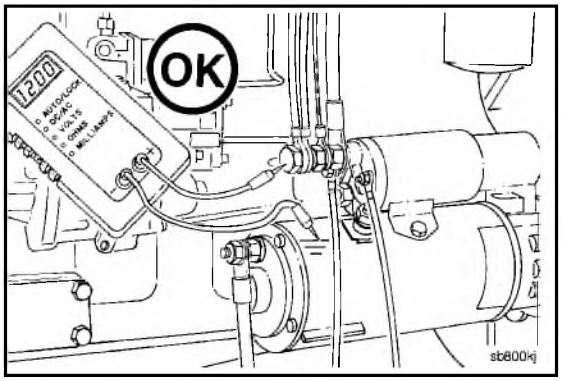

Starter Solenoid and Starter - Check

1. Use Part No. 3376898 Digital Multimeter with the switch set to the voltage scale.
2. Connect the multimeter positive lead to the starter solenoid positive cable terminal and the negative lead to the battery ground cable connection at the starter.

NOTE: The multimeter **must** show system voltage.

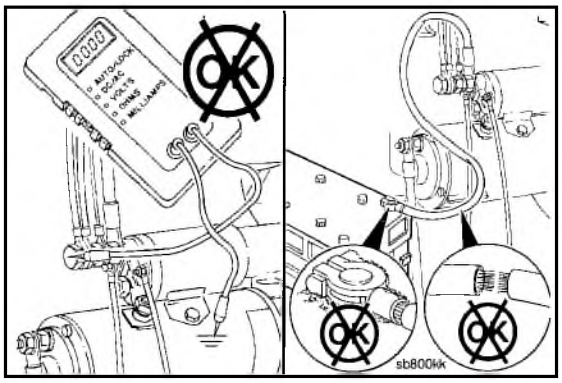

3. If the multimeter does **not** indicate system voltage, check the cable connecting the starter solenoid and battery for breaks, loose, or corroded connections.

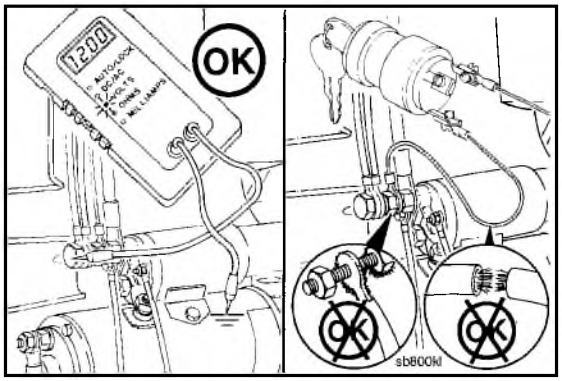

4. If the multimeter indicates system voltage but the starter will **not** operate, check the wire connecting the starter solenoid to the starter switch for breaks, loose, or corroded connections.

5. If the wire connecting the starter solenoid and starter switch is **not** loose or damaged and the starter will **not** operate:
   a. Remove the cable connecting the starter and starter solenoid from the solenoid terminal.
   b. Connect the multimeter positive lead to the solenoid positive terminal and the negative lead to a chassis or engine ground location.

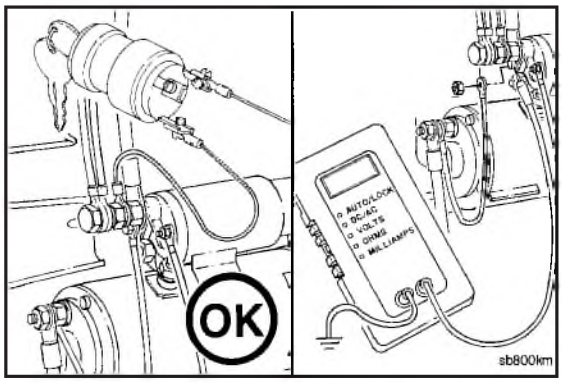

   c. Turn the starter switch to the ''START'' position.
   d. If the multimeter indicates voltage, the starter solenoid is malfunctioning and **must** be replaced.

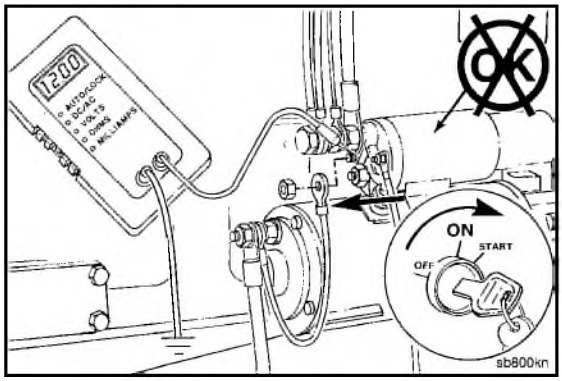

   e. If the multimeter does **not** indicate voltage, check the wire connecting the starter solenoid to the magnetic switch for breaks, loose, or corroded connections.

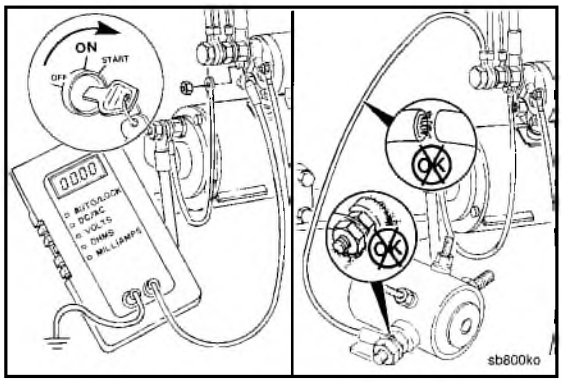

6. If the wire connecting the starter solenoid to the magnetic switch is **not** loose or damaged and the starter will **not** operate:
   a. Check the cable connecting the starter solenoid to the starting motor for breaks, loose, or corroded connections.

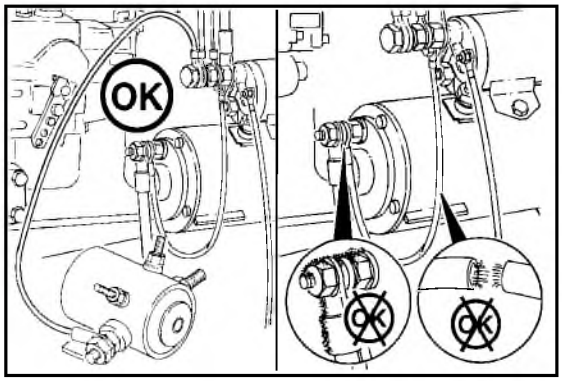

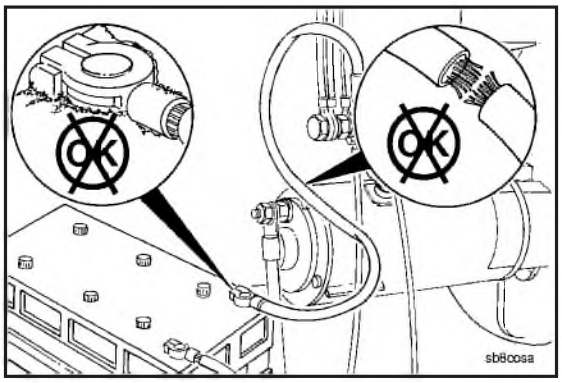

b. Check the cable connecting the starting motor to the battery for breaks, loose, or corroded connections.

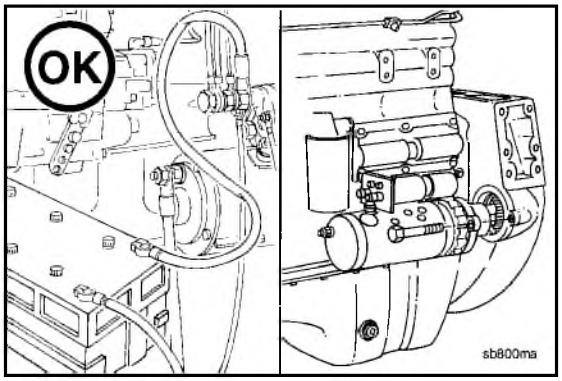

c. If the cables are **not** loose or damaged, the starting motor is defective and **must** be replaced.

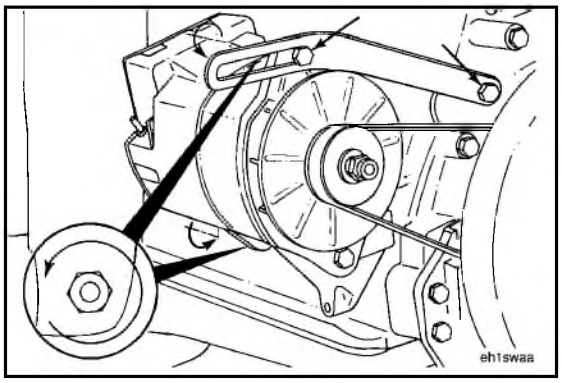

Alternator Belt - Adjust (6-07)

1. Loosen the alternator to alternator support bracket nut and capscrew.
2. Loosen the adjusting link capscrew.

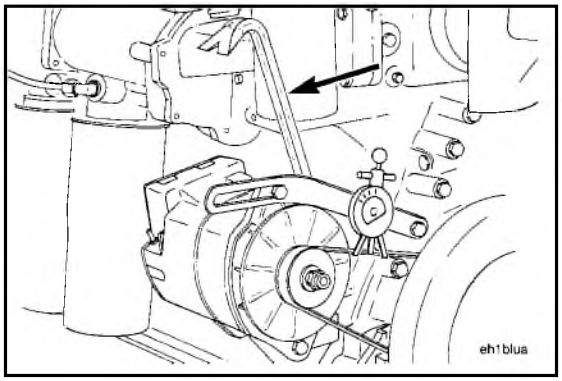

3. Use a pry bar between the engine and alternator to tighten the alternator belt.
4. Use Part No. ST-1274 Belt Tension Gauge to measure the belt tension.

5. Adjust the belt tension to the following values:

New Belt Tension	Used Belt Tension
580-670N [130-150 lb]	360-530N [80-120 lb]

NOTE: A belt is considered used if it has been in operation for more than 10 minutes.

If the belt will **not** maintain the correct tension, it **must** be replaced.

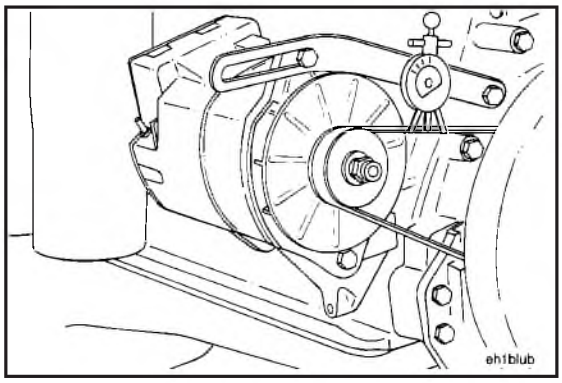

6. Tighten the adjusting link capscrews to the following torque value (Grade 5 or higher):

Bolt Size	Threads/Inch	NM	Ft-lb
5/16	18	20	[15]
7/16	14	35	[25]
1/2	13	65	[50]

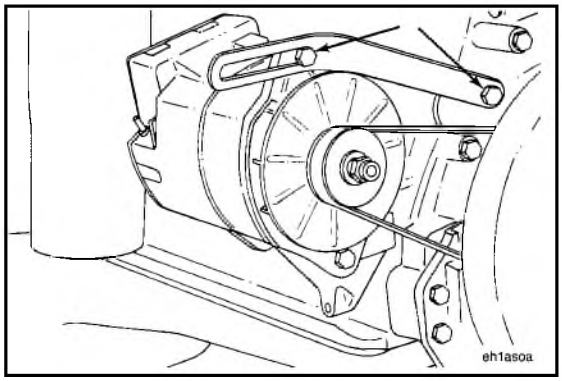

7. Tighten the alternator to alternator support capscrew and nut to the following torque value (Grade 5 or higher):

Bolt Size	Threads/Inch	NM	Ft-lb
3/8	16	40	[30]
7/16	20	90	[65]
1/2	13	110	[80]

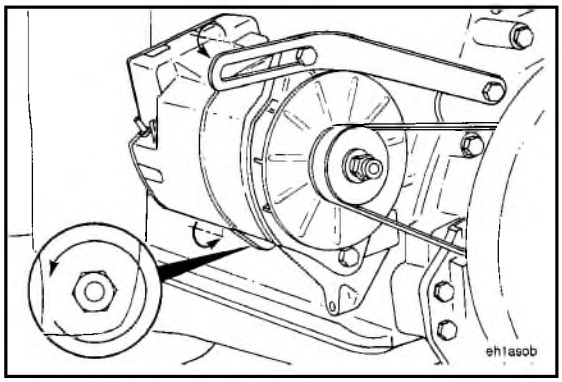

Alternator - Output Test (6-08)

1. The following instructions are for use with Part No. 3377193 Inductive Charging and Cranking System Analyzer or equivalent.

NOTE: Before performing the following test, be sure the alternator belt is tightened to the correct specifications. Refer to Procedure 6-07.

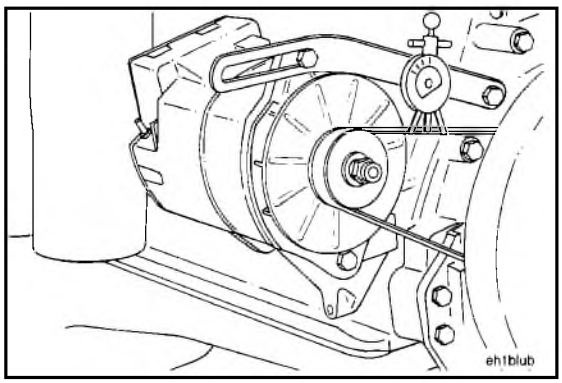

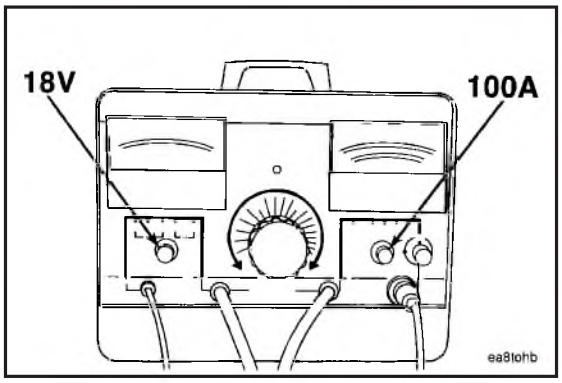

2. Set the voltage selector knob to 18 volts.
3. Set the amp selector knob to 100 amps.

NOTE: Use the 1000 amp scale for alternators with a maximum output of more than 100 amps.

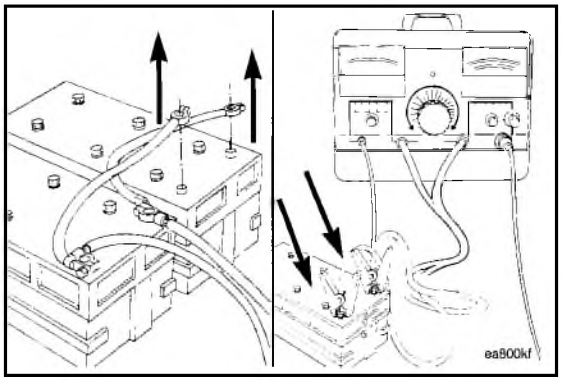

4. Remove the cables to any other battery boxes in the circuit.
5. Connect the correct analyzer leads to positive and negative terminals in one of the battery boxes.

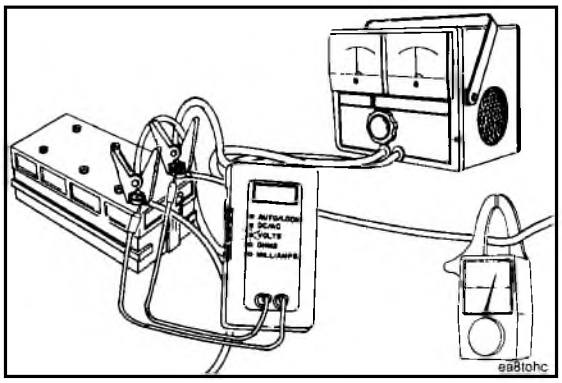

6. Connect the clamp-on amp pick-up to the alternator output cable as far away from the alternator as possible.

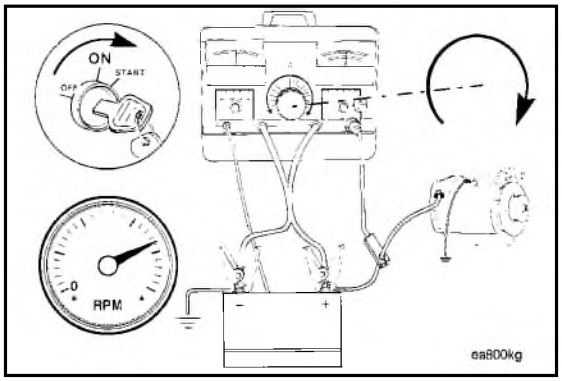

7. Operate the engine at high idle and turn the analyzer load control knob **clockwise** until a maximum amps reading is reached.

NOTE: Do **not** let the load volts drop below 13.0 volts.

8. The maximum amps reading is the alternator output, and **must** meet the alternator manufacturer's specifications.

NOTE: The alternator maximum rated output is normally stamped or labeled on the alternator.

NOTE: If the equipment's ameter gauge does **not** indicate approximately the same output as the test equipment's gauge, the equipment's ameter gauge is defective and **must** be replaced. Refer to the equipment manufacturer's instructions.

NOTE: If the alternator output (amps) is **not** within 10 percent of rated output, repair or replace the wiring, voltage regulator, or alternator. Refer to the manufacturer's instructions for repair procedures.

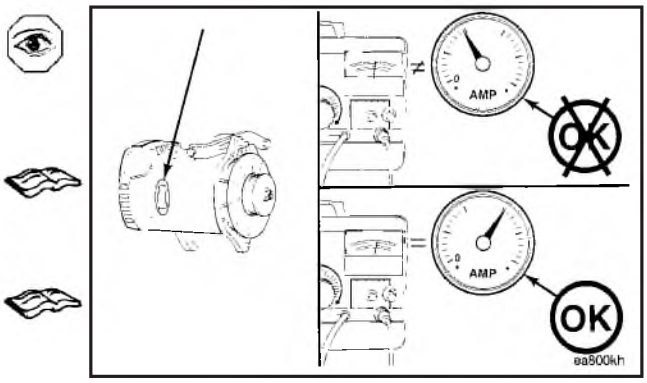

9. Turn the analyzer load control knob **counterclockwise** to the ''OFF'' position and shut off the engine.

   Remove the test equipment and connect any battery cables that were removed from other battery boxes in the circuit.

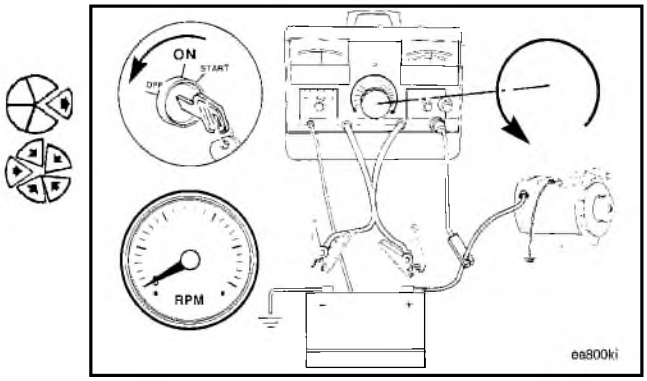

Alternator - Replace (6-09)

Remove

1. Remove the electrical connections from the batteries.
2. Remove the electrical connections from the alternator.

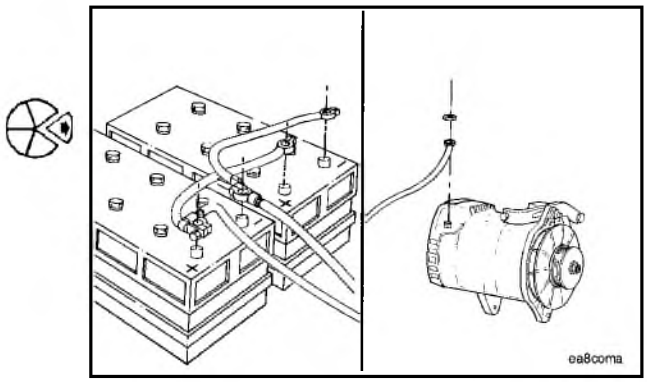

3. Loosen the alternator to alternator support nut and capscrew.
4. Loosen the adjusting link capscrew.
5. Push the alternator toward the engine to release tension on the alternator belt, and remove the belt(s).

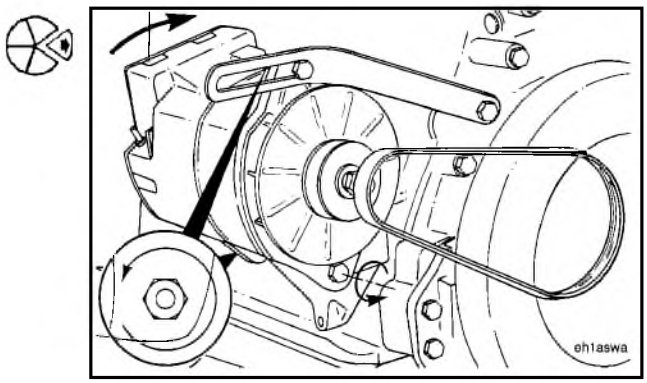

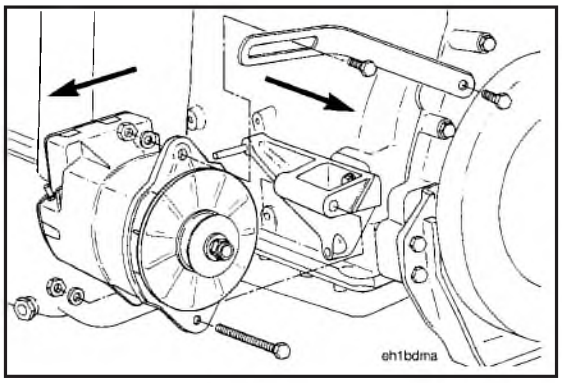

6. Remove the adjusting link capscrew and the adjusting link.
7. Remove the alternator to alternator support bracket nut, washer, capscrew, and the alternator.

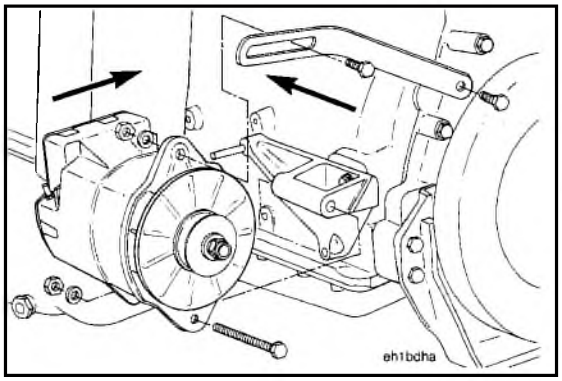

Install

NOTE: Do **not** tighten the alternator mounting and adjusting link capscrews and nuts until the alternator belt is installed and adjusted.

1. Install the alternator, capscrew, washer, and nut to the alternator mounting bracket.
2. Install the adjusting link and mounting capscrews.

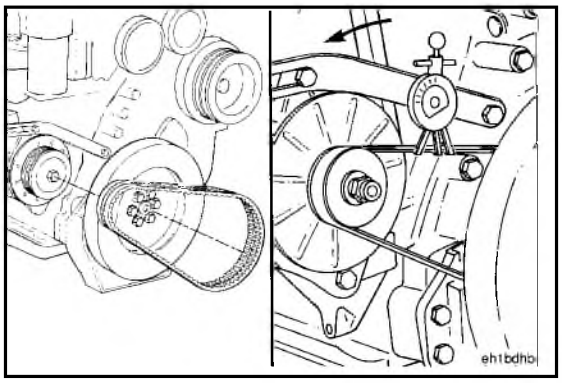

3. Install and adjust the alternator belt. Refer to Procedure 6-07.

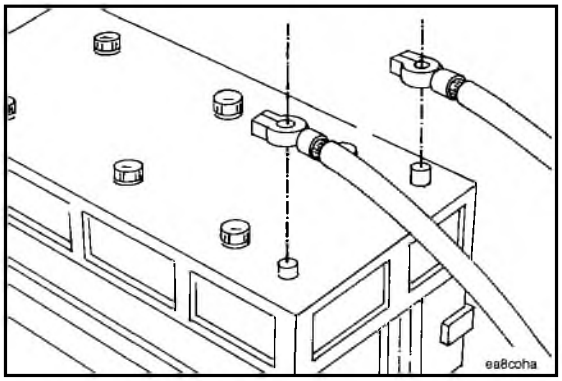

4. Install and tighten the electrical connections to the alternator.
5. Install and tighten the electrical connections to the batteries.

Starting Motor - Replace (6-10)

Remove

1. Remove the electrical connections from the batteries.
2. Remove the electrical connections from the starting motor.

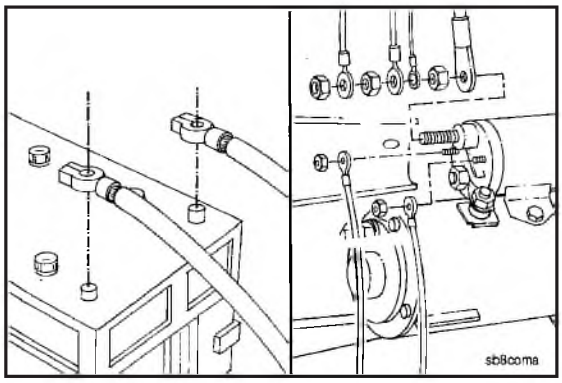

3. Remove the three capscrews, starting motor, and starter motor spacer (if used).

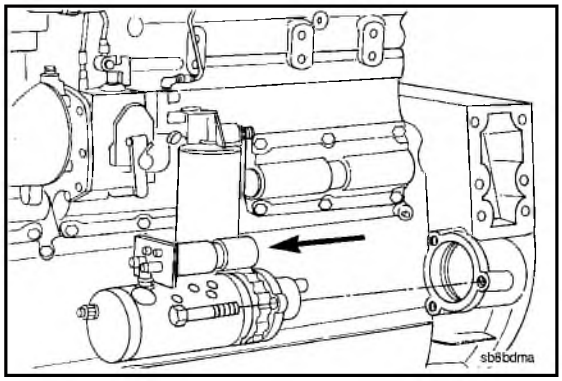

Install

Caution: Be sure to use the same thickness of starter motor spacer (if used) as the one removed to install the starting motor to prevent engine or starter motor damage.

1. Install the starting motor and the three capscrews.
2. Tighten the capscrews to 175 N•m [130 ft-lb] torque.
3. Install and tighten the electrical connections to the starting motor.

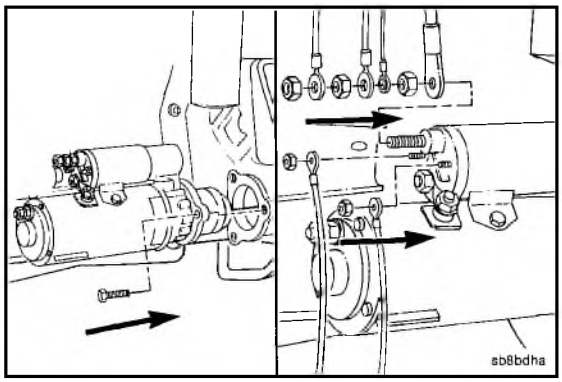

4. Install and tighten the electrical connections to the batteries.

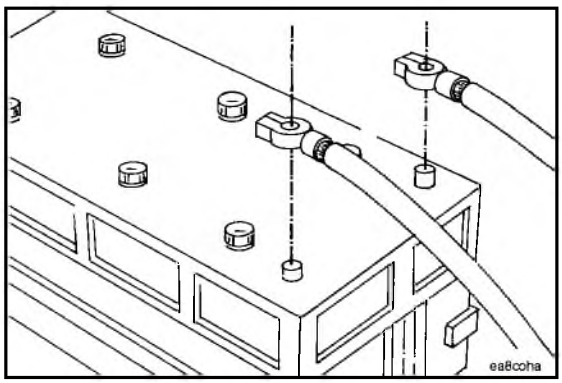

Section 7 - Base Engine Components

Section Contents

	Reference No.	Page No.
Service Tools	7-00	3
General Information	7-01	5

Troubleshooting and Repair List

	Procedure No.	Page No.
Accessory Drive - Replace	7-28	162
Accessory Drive Pulley - Replace	7-25	156
Cam Followers (MVT Injection Timing) - Replace	7-15	73
Cam Followers (Fixed Injection Timing) - Replace	7-13	56
Camshaft - Replace	7-36	189
Camshaft Bearing Support - Replace	7-32	175
Camshaft Bushing - Replace	7-38	199
Camshaft Gear - Replace	7-37	195
Connecting Rods - Replace	7-23	137
Connecting Rod Bearings - Replace	7-21	119
Crankshaft Gear - Replace	7-35	186
Crankshaft Pulley - Replace	7-30	171
Crossheads, Valves, and Injectors - Adjust	7-04	8
Cylinder Heads - Replace	7-11	44
Cylinder Head - Pressure Test	7-12	54
Cylinder Head Gasket(s) - Replace	7-10	39
Cylinder Liners - Replace	7-24	143
Engine Lifting Brackets	7-03	7
Flywheel - Replace	7-39	205
Flywheel Housing - Replace	7-41	216
Flywheel Housing Redowel to Cylinder Block	7-42	224
Front Engine Support Bracket - Replace	7-33	178
Gear Cover - Replace	7-34	180
Injection Timing (Fixed)	7-17	93
Injection Timing (General Information)	7-16	92
Injection Timing (MVT)	7-18	101
Jacobs Engine Brake - Adjust	7-05	20
Jacobs Engine Brake - Check	7-06	22
Jacobs Engine Brake - Replace	7-07	25
Main and Thrust Bearings - Replace	7-20	110
Mechanical Variable Timing (MVT) System	7-14	61
Pipe Plugs and Cup Plugs - Replace	7-43	230
Pistons and Rings - Replace	7-22	124
Piston Cooling Nozzles - Replace	7-19	108
Push Rods - Replace	7-08	29
Rocker Housing Covers - Replace	7-02	5
Rocker Levers/Rocker Lever Housings - Replace	7-09	32
Seal, Accessory Drive - Replace	7-27	159
Seal, Front Crankshaft - Replace	7-31	173
Seal, Rear Crankshaft - Replace	7-40	212

	Procedure No.	Page No.
Vibration Damper	7-29	7-
Wear Sleeve, Accessory Drive Pulley - Replace	7-26	7-

Required Service Tools - (7-00)

Base Engine Components

Procedure No.	Part No.	Description
7-03	ST-1229	Cylinder Liner Driver
	3376015	Universal Cylinder Liner Puller
	3376018	Liner Puller Arm Extension Foot (two) used with puller Part No. 3376015 or Part No. ST-1202-1 Liner Puller Plate
	3375629	Universal Cylinder Liner Puller
	3376220	Gauge Block
	3376669	Cylinder Liner Clamp Set
	3801048	Sealant
7-04	ST-669	Torque Wrench Adapter
	3375160	Top Stop Injector Setting Fixture
	3375842	Injector Adjustment Kit
	3376592	Inch Pound Torque Wrench
7-05	3087	Jacobs® Feeler Gauge
	ST-669	Torque Wrench Adapter
7-09	ST-1182	Valve Spring Spray Nozzle Locator (80-degree tilt engines only)
7-10	3376298	Cylinder Block Deck Water Plug
	3376669	Cylinder Liner Clamp Set
7-11	ST-1257	Valve Vacuum Tester
7-12	ST-1012	Hydrostatic Tester
	ST-1013	Water Tester Adapter Plate
	ST-1022	Valve Spring Compressor Stand
	ST-1026	Valve Spring Compressor Plate
	ST-1179	Injector Sleeve Holding Tool (2 each)
7-13	ST-1053	Expansion Plug Driver
7-14	ST-1332	Injector Orifice Plug Gauges
	3376021	Actuator, Retainer Adjusting Tool
7-15	ST-1053	Expansion Plug Driver
	3376021	Actuator, Retainer Adjusting Tool
	3376022	Solenoid Valve Seat Installation Tool
	3376023	Solenoid Stem Installation/Removal Tool
	3376024	Sleeve and Guide Installation Tool
	3376025	Sleeve and Guide Removal Tool
	3376026	Lever Bushing Block/Mandrel Set
	3376027	Cam Follower Shaft Positioner
	3376028	Variable Timing Fixture
	3376185	Gauge, Male and Female Position
	3376186	Expansion Plug Driver
	3376209	Bracket
7-17	3375522	Injection Timing Fixture
7-18	3375522	Injection Timing Fixture

7-19	ST-835	O-Ring Assembly Tool
7-20	ST-1178	Main Bearing Cap Puller
	3376859	Coupler
7-21	3376859	Coupler
7-22	ST-560	Piston Ring Groove Wear Gauge
	ST-763	Piston Ring Expander
	3375162	Piston Ring Compressor
	3375601	Connecting Rod Guide Pins (two)
7-25	ST-647	Standard Puller
	3376326	Pulley Installation Tool
7-27	ST-1173	Fuel Pump Drive Oil Seal Mandrel
7-31	ST-1259	Oil Seal Puller/Installer (Front Seal)
	3375496	Oil Seal Puller Drill Pilots (Front Seal)
7-35	3375839	Jaw (included in the following part number)
	3375840	Crankshaft Gear Puller Kit
7-36	3375268	Camshaft Installation Pilot (4 are required per operation)
		Note: Part No. 3375268 Camshaft Installation Pilot is required for camshaft removal and installation to prevent damage to the journals and the bushings.
7-38	ST-1228	Camshaft Bushing Driver Set
	ST-1228-6	Camshaft Bushing Guide
	3375861	Camshaft Bushing Driver
	3375863	Camshaft Bushing Puller
	3376412	Camshaft Bushing Driver (Long)
7-39	ST-1325	Dial Gauge Attachment
	3375432	Crack Detection Kit
	3376050	Dial Indicator and Sleeve Assembly
7-40	ST-997	Crankshaft Oil Seal Driver (Rear Seal)
7-41	ST-1325	Dial Gauge Attachment
	3376050	Dial Indicator and Sleeve Assembly
7-42	ST-1134	Dowel Pin Extractor (or its equivalent)
	ST-1232	Drill Ream Fixture which contains:
		ST-1232-1 Plate
		ST-1232-2 Spacer Washer
		3375052 Locator Pin
		Drill/ream actual sizes depend on the dowel
		Bushing set size (see page 227)
		Drill adapter locally obtained; use to adapt open-shank reamers to drill-chuck
		Reamer locally obtained
		Drill bit locally obtained
7-43	3375068	Cup Plug Sealant

General Information - (7-01)

The base engine components section consists of the removal, cleaning, inspection, testing, and assembly of all internal and external components **not** previously covered in the troubleshooting and repair of the various engine systems.

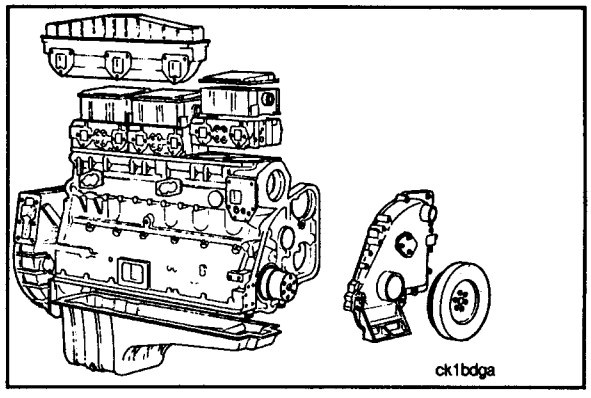

Rocker Housing Covers - Replace (7-02)

Remove

1. Remove the air crossover connection (Big Cam III only). Refer to Procedure 3-13.
2. Remove the hose from the crankcase breather.
3. Remove the five capscrews and washers from each rocker lever cover.
4. Remove the covers.

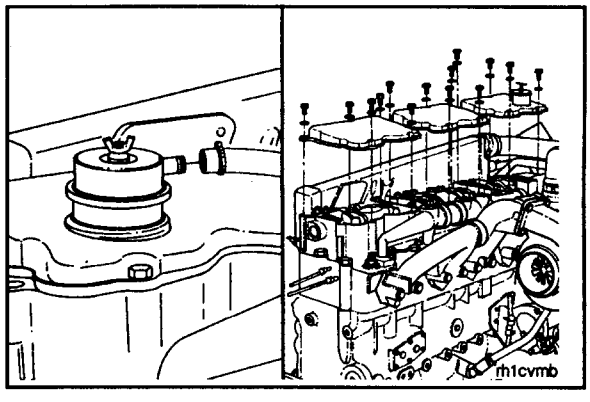

Clean and Inspect

1. Remove the crankcase breather element, if used, and the oil filler cap. Refer to Procedure 2-12.
2. Remove the gaskets.
3. Steam clean the covers, and dry with compressed air.

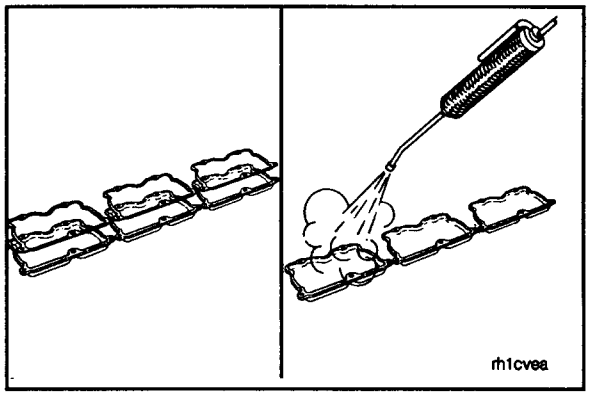

NOTE: Stamped steel valve covers are designed and manufactured with a 0.75 mm [0.030-inch] bow located in the shaded areas as shown to provide better sealing qualities. This built-in bow on the valve covers **must not** be mistaken for warpage. Also, do **not** attempt to increase or remove the bow from the sealing surface.

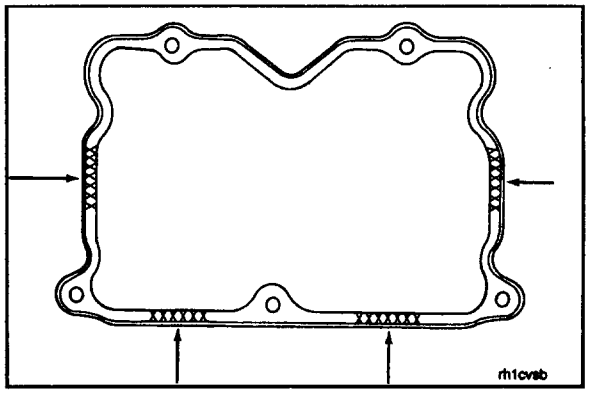

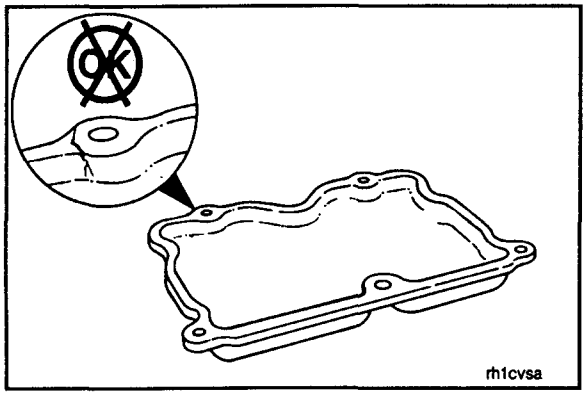

4. Inspect each cover for cracks or damage, and replace if necessary.

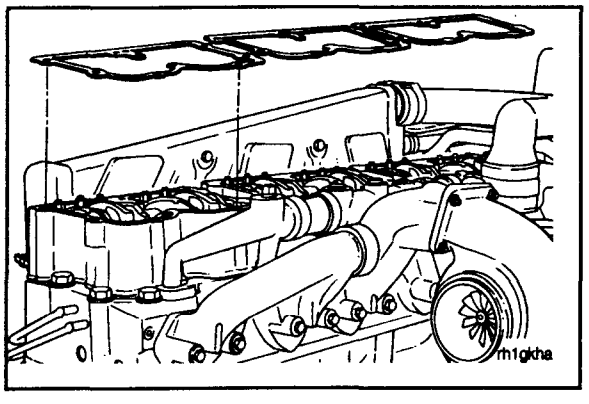

Install

1. Install a new gasket on each rocker lever housing.

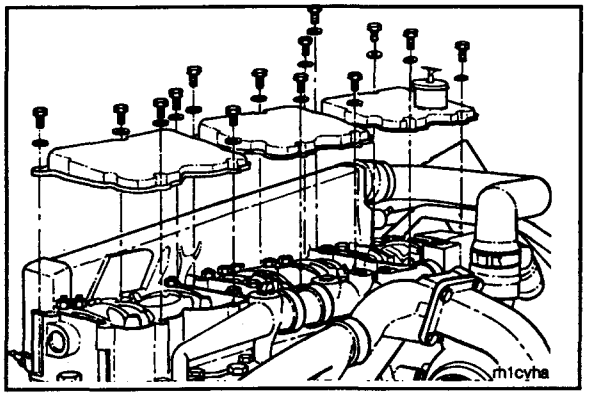

2. Install the covers on the rocker lever housings.
3. Install the five capscrews and washers in each cover.

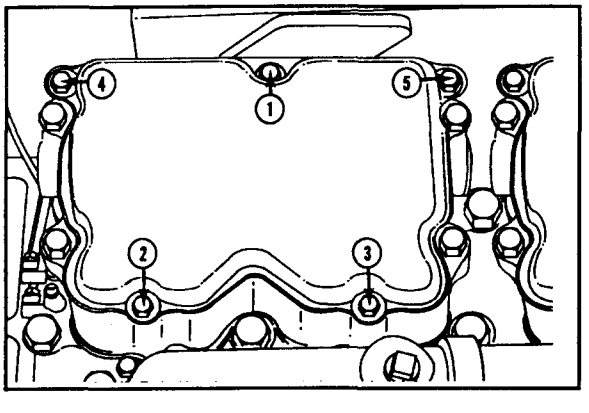

4. Tighten the capscrews in each cover in the sequence shown to 20 N•m [15 ft-lbs] torque.

5. Install the air crossover connection (Big Cam III only). Tighten the mounting capscrews to 35 N•m [25 ft-lbs] torque. Tighten the hose clamps to 8 N•m [70 in-lbs] torque.

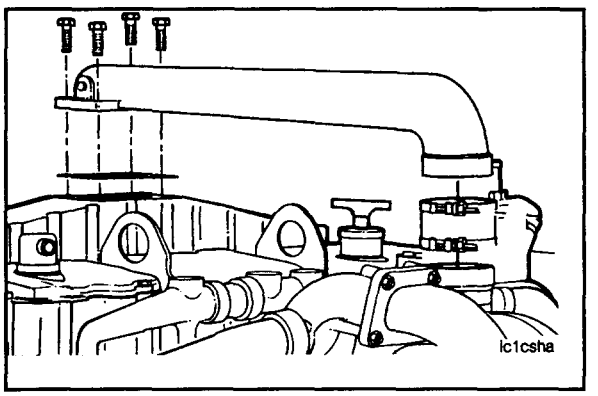

6. Install the crankcase breather element, if used, and the oil filler cap. Refer to Procedure 2-12.
7. Install the hose on the crankcase breather.
8. Tighten the hose clamp to 5 N•m [40 in-lbs] torque.

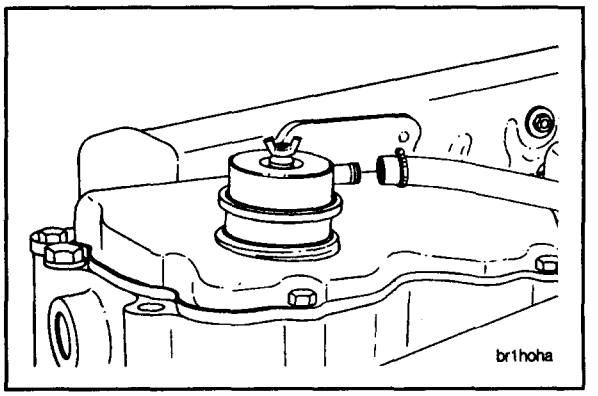

Engine Lifting Brackets - Replace (7-03)

Remove

1. Remove the two capscrews and the front lifting bracket.
2. Remove the two capscrews and the rear lifting bracket.

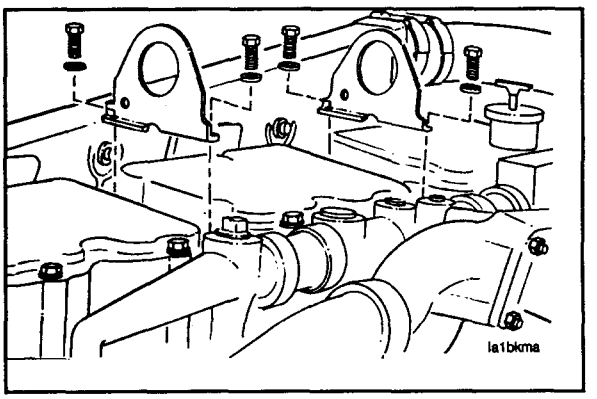

Clean and Inspect

1. Steam clean or use solvent, and dry with compressed air.
2. Visually inspect the lifting brackets for cracks or damage.
3. Inspect the capscrew threads for damage.

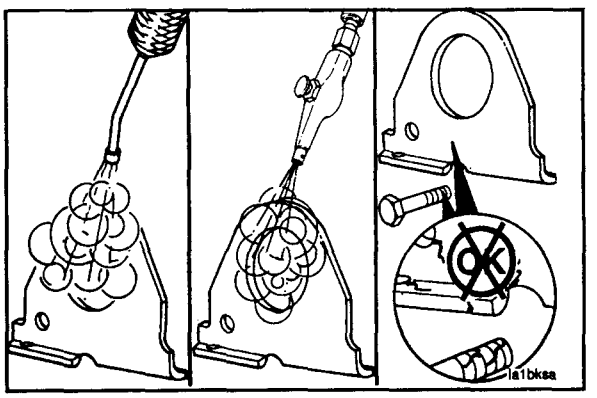

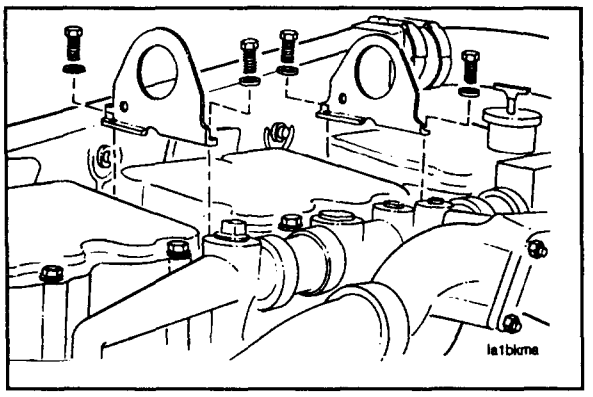

Install

1. Install the front bracket and two capscrews.
2. Install the rear bracket and two capscrews.
3. Tighten the capscrews to 80 N•m [60 ft-lbs] torque.

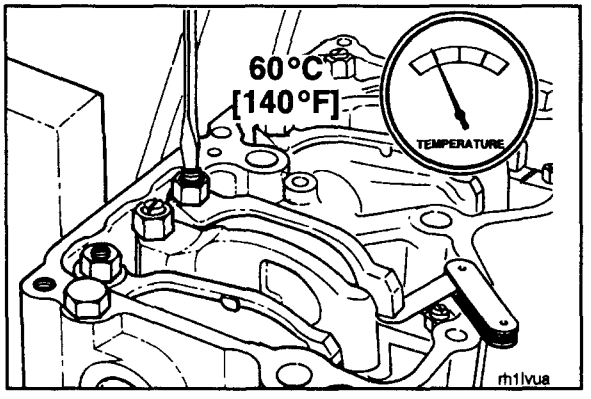

Crossheads, Valves and Injectors - Adjust (7-04)

1. All overhead (crosshead, valve, and injector) adjustments **must** be made when the engine is cold (any stabilized coolant temperature at 60°C [140°F] or below).

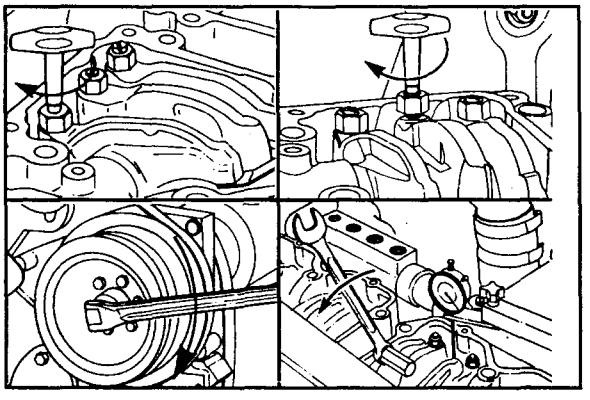

NOTE: After an engine rebuild or any major repair where the injector setting **must** be disturbed, set all of the valves and injectors. Once the adjustment procedure has been completed, continue through the crankshaft rotation and check (adjust if necessary) the injector adjustment on cylinders No. 2, No. 3, and No. 6. This takes care of any camshaft and rocker lever shaft deflection which may have occurred during the initial adjustment.

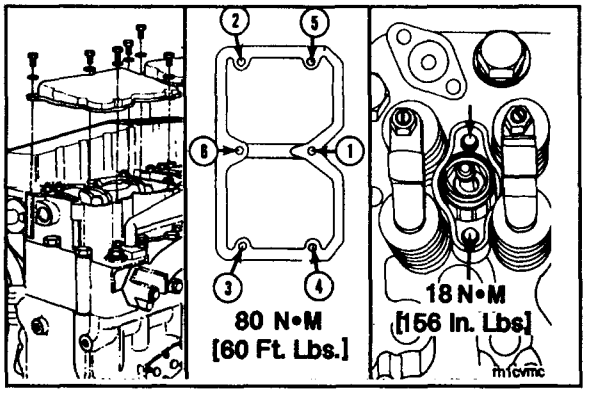

2. Remove the rocker housing cover. Refer to Procedure 7-02.
3. Tighten the rocker housing capscrews to 80 N•m [60 ft-lbs] torque. Refer to Procedure 7-09.
4. Alternately tighten the injector hold down capscrews to 18 N•m [156 in-lbs] torque.

5. The valve set marks are located on the accessory drive pulley. The marks align with a pointer on the gear cover.

Warning: Do not pull or pry on the fan to manually rotate the engine. To do so can damage the fan blades. Damaged fan blades can cause premature fan failures which can result in serious personal injury or property damage.

6. Use the accessory drive shaft to rotate the crankshaft.

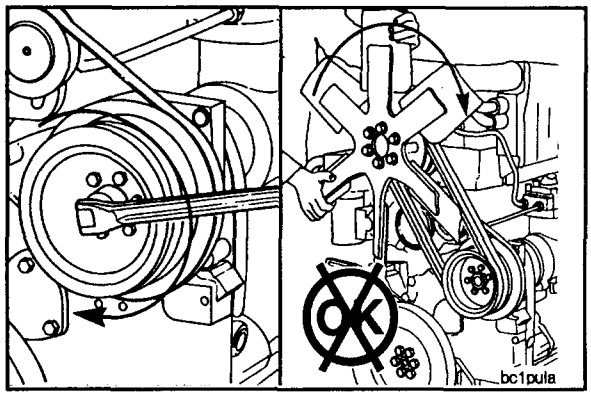

7. The crankshaft rotation is **clockwise** when viewed from the front of the engine.
8. The cylinders are numbered from the front gear cover end of the engine.
9. The engine firing order is 1-5-3-6-2-4.

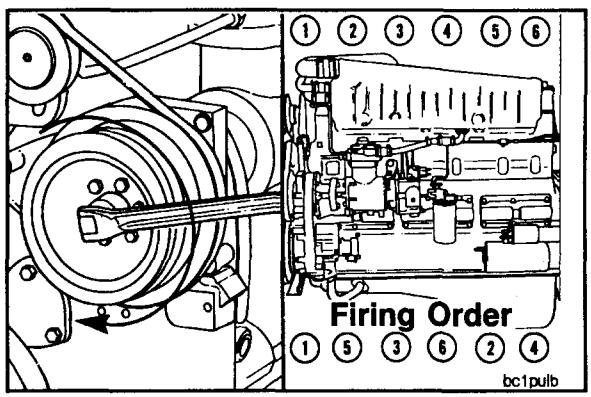

10. Each cylinder has three rocker levers. The rocker lever nearest to the center of the housing is the intake lever.
    a. The exhaust rocker lever (1).
    b. The injector rocker lever (2).
    c. The intake rocker lever (3).

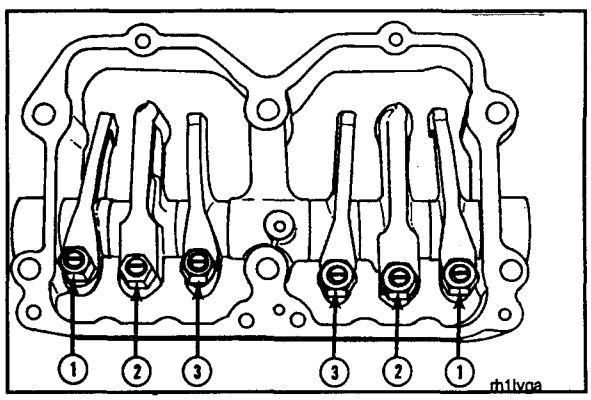

11. The valves and the injectors on the same cylinder are **not** adjusted at the same index mark on the accessory drive pulley.
12. One pair of valves and one injector are adjusted at each pulley index mark **before** rotating the accessory drive to the next index mark.
13. Two crankshaft revolutions are required to adjust all the valves and the injectors.

Injector and Valve Adjustment Sequence

Bar Engine in Direction of Rotation	Pulley Position	Set Cylinder Injector	Set Cylinder Valve
Start	A	3	5
Advance to	B	6	3
Advance to	C	2	6
Advance to	A	4	2
Advance to	B	1	4
Advance to	C	5	1

Firing Order: 1-5-3-6-2-4

oi100vd

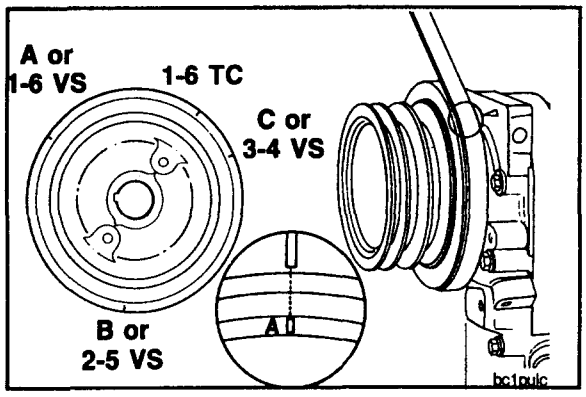

Injector Adjustment - Dial Indicator Method (Non-Top Stop Injectors Only)

1. Rotate the accessory drive **clockwise** until the "A" valve set mark on the accessory drive pulley is aligned with the pointer on the gear cover.

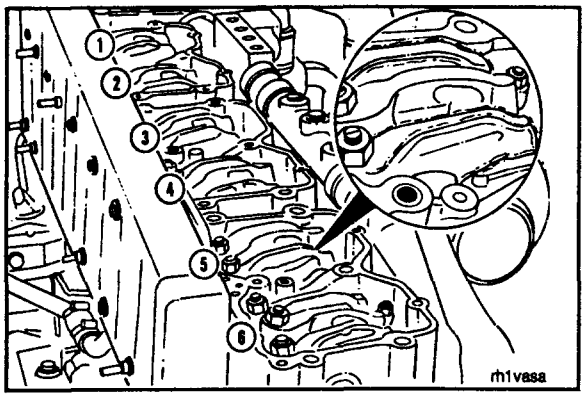

2. Check the valve rocker levers on cylinder No. 5 to see if both valves are closed.

NOTE: Both valves are closed when both rocker levers are loose and can be moved from side to side. If both valves are **not** closed, rotate the accessory drive one complete revolution; and align the "A" mark with the pointer again.

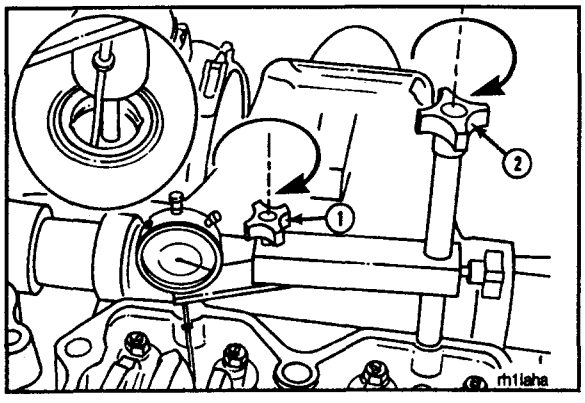

Caution: To prevent damage to the indicator or to avoid getting an incorrect reading, install the dial indicator extension so that it clears the rocker lever.

3. Install the dial indicator and the support from Part No. 3375842 Injector Adjustment Kit so that the extension for the dial indicator is on top of the injector plunger flange on cylinder No. 3.
4. Securely tighten the thumb screw (1) and the hold down capscrew (2) in place.

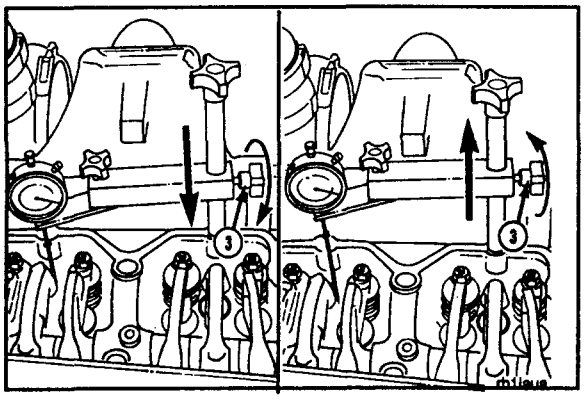

5. Loosen the thumb screw (3), and lower the indicator against the injector plunger flange until the stem is fully compressed.
6. Raise the indicator approximately 0.63 mm [0.025-inch], and tighten the thumb screw (3) to hold the indicator in position.

Warning: The injector plunger is under spring tension. Do not allow the tool to slip. Personal injury can result.

7. Use ST-1193 Rocker Lever Actuator to depress the injector plunger three or four times to make sure all the oil and fuel have been removed from the injector assembly. Allow the lever to return slowly to prevent damage to the dial indicator.
8. Actuate the lever again, and set the dial indicator at "0" (zero) while holding the injector plunger to the bottom of its travel.

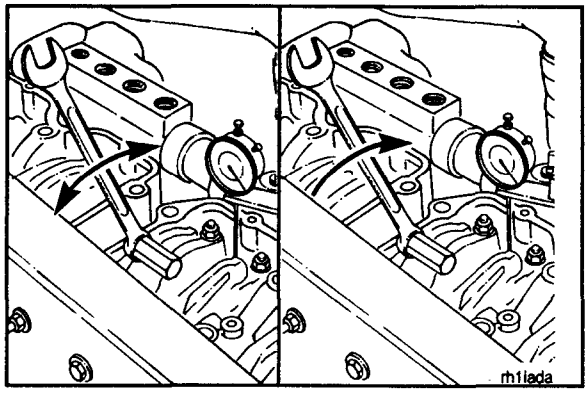

9. Slowly release the actuator, and check the indicator travel.
10. If the indicator travel is **not** within the following specifications, proceed to step No. 11:

Injector Plunger Travel		
mm		in
5.79	Big Cam	0.228
5.71	NTE Big Cam	0.225

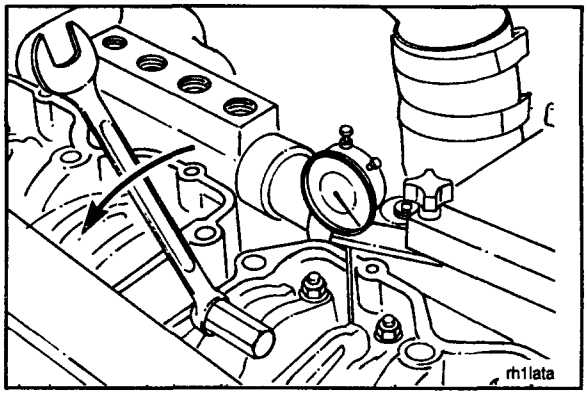

11. Loosen the lock nut on the injector adjusting screw.
12. Turn the adjusting screw **clockwise** or **counterclockwise** to adjust the injector plunger to the following dial indicator readings:

Injector Plunger Travel		
mm		in
5.79	Big Cam	0.228
5.71	NTE Big Cam	0.225

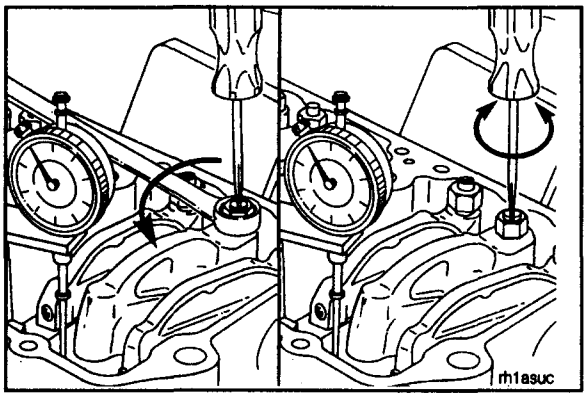

13. Hold the adjusting screw in this position. The adjusting screw **must not** turn when the lock nut is tightened. Tighten the lock nut to the following torque values:

With Torque Wrench Adapter, Part No. ST-669(1)	45 N•m [35 ft-lbs]
Without Adapter	60 N•m [45 ft-lbs]

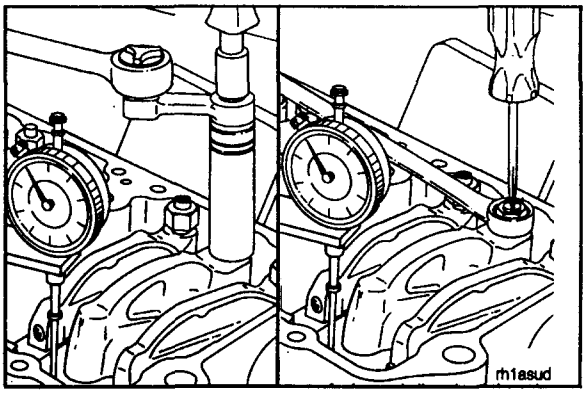

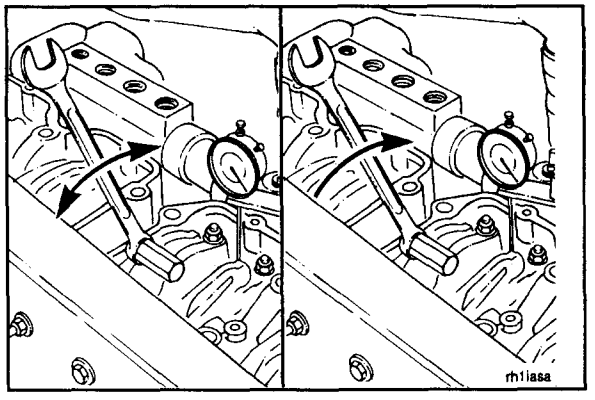

Warning: The injector plunger is under spring tension. Do not allow the tool to slip. Personal injury can result.

14. Actuate the injector rocker lever several times. Allow the lever to return slowly to prevent damage to the dial indicator. Hold the injector plunger to the bottom of its travel, and confirm the "0" (zero) reading on the dial indicator.

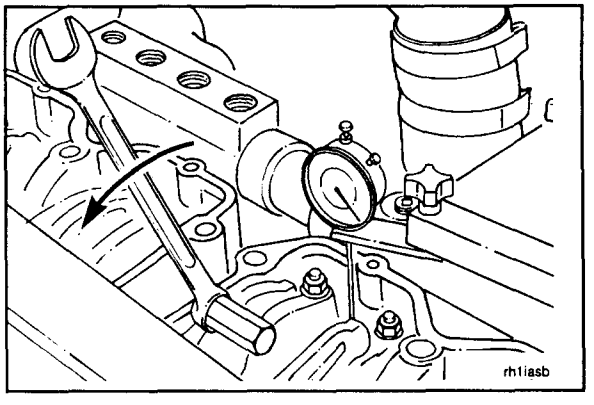

15. Allow the injector rocker lever to return slowly. Check the reading on the dial indicator. Repeat the adjustment process if the reading is **not** within specifications.

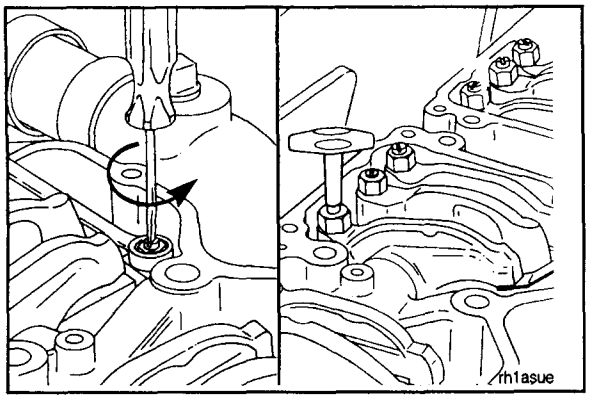

16. Adjust the crossheads and the valves on cylinder No. 5 **before** rotating the accessory drive to the next valve set mark. Refer to "Crosshead Adjustment" and "Valve Adjustment" in this Procedure.

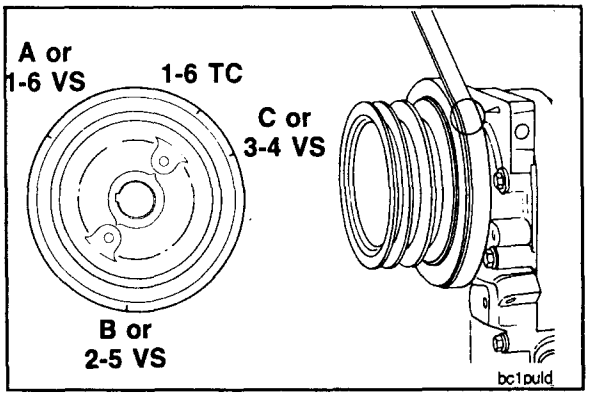

17. After adjusting the crossheads and the valves on cylinder No. 5, rotate the accessory drive; and align the next valve set mark on the accessory drive pulley with the pointer on the gear cover.

18. Adjust the appropriate injector, the crossheads, and the valves. Follow the Valve and Injector Adjustment Sequence Chart.
19. Repeat the process to adjust all the injectors, the crossheads, and the valves correctly.

Injector and Valve Adjustment Sequence

Bar Engine in Direction of Rotation	Pulley Position	Set Cylinder Injector	Set Cylinder Valve
Start	A	3	5
Advance to	B	6	3
Advance to	C	2	6
Advance to	A	4	2
Advance to	B	1	4
Advance to	C	5	1

Firing Order: 1-5-3-6-2-4

oi100vd

Injector Preload Adjustment - NH/NT Top Stop Injectors Only

Caution: Top stop injector plunger travel can only be adjusted when the injectors are removed from the engine. Use Part No. 3375160 Adjusting Tool to set the injectors.

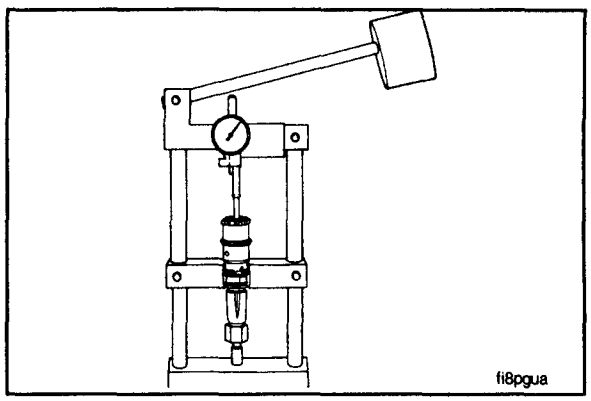

Special Instructions for Injector Preload Adjustment on Engines Equipped With MVT

1. MVT engines are equipped with a special bolt-on-pointer bracket which **must** be aligned with the valve set marks on the accessory drive pulley due to the special MVT camshaft design. The pointer is positioned 40 degrees **clockwise** from the pre-cast pointer on the gear cover.

NOTE: Do not use the "TC" (top center) mark on the accessory drive pulley in reference with the bolt-on-pointer.

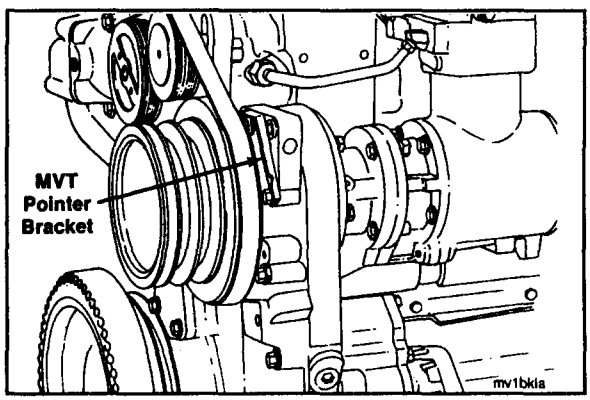

Caution: Do not allow the wire lead to contact a metal surface. Electrical arcing can occur.

2. To place the MVT in the retarded mode, disconnect the electrical wire to the MVT air solenoid valve at the solenoid terminal.

NOTE: When setting the injector preload on engines equipped with mechanical variable timing (MVT), the MVT system **must** be in the retarded timing mode to prevent misadjustment of the injector preload.

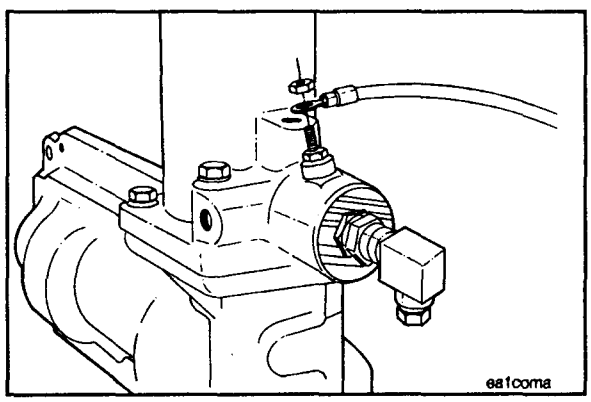

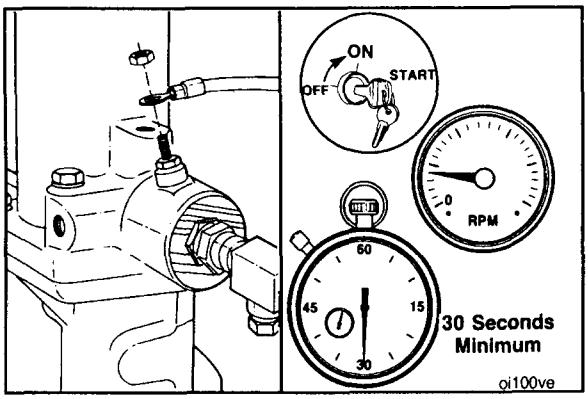

3. Start the engine with the air solenoid wire disconnected. Operate the engine at idle speed for at least 30 seconds before shutting the engine off.

NOTE: Do **not** connect the electrical wire to the MVT solenoid until the injector preload adjustment has been completed.

Injector and Valve Adjustment Sequence

Bar Engine in Direction of Rotation	Pulley Position	Set Cylinder Injector	Set Cylinder Valve
Start	A	3	5
Advance to	B	6	3
Advance to	C	2	6
Advance to	A	4	2
Advance to	B	1	4
Advance to	C	5	1

Firing Order: 1-5-3-6-2-4

oi100vd

Injector Preload Adjustment Procedures For MVT and Non-MVT engines

1. The top stop injector preload setting is made at the same injector adjustment position on the accessory drive pulley which is used for the dial indicator method.

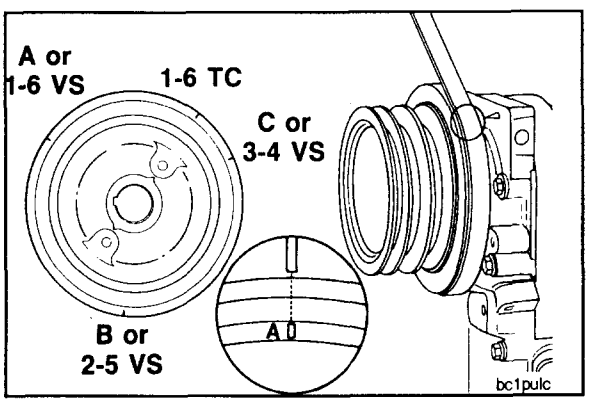

2. Rotate the accessory drive **clockwise** until the "A" valve set mark on the accessory drive pulley is aligned with the pointer.

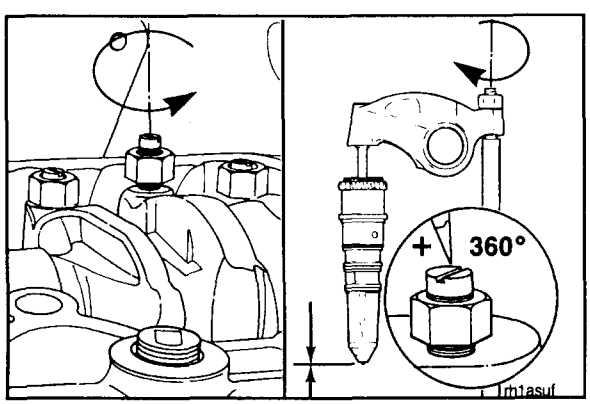

3. Loosen the lock nut on the injector adjusting screw on cylinder No. 3. Tighten the adjusting screw until all the clearance is removed from the injector train.
4. Tighten the adjusting screw one additional turn to correctly seat the link.

5. Loosen the injector adjusting screw until the injector spring retainer washer touches the top stop screw.

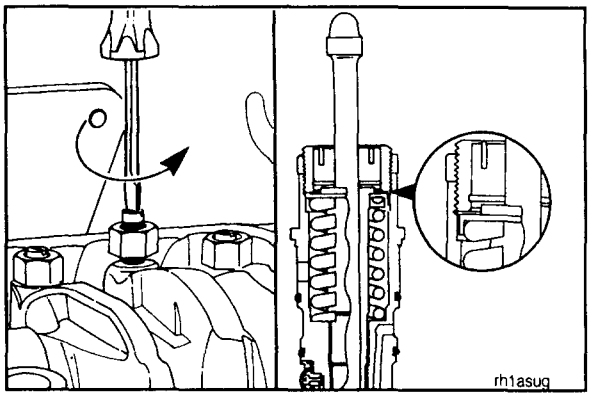

Caution: An overtightened setting on the injector adjusting screw will produce increased stress on the injector train and the camshaft injector lobe which can result in engine damage.

6. Use Part No. 3376592 Torque Wrench to tighten the adjusting screw to 0.56 to 0.68 N•m [5 to 6 in-lbs] torque.

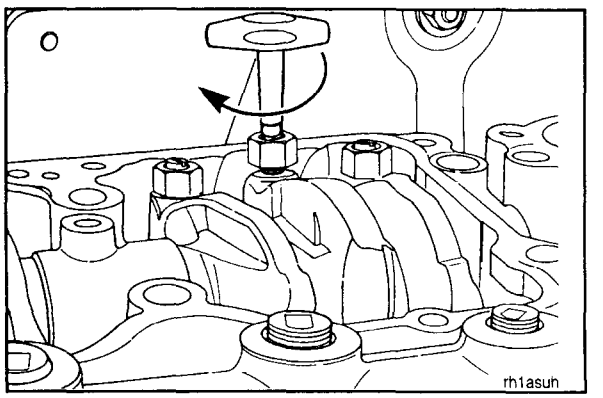

7. Hold the adjusting screw in this position. The adjusting screw **must not** turn when the lock nut is tightened. Tighten the lock nut to the following torque values:

With Torque Wrench Adapter, Part No. ST-669(1)	45 N•m [35 ft-lbs]
Without Adapter	60 N•m [45 ft-lbs]

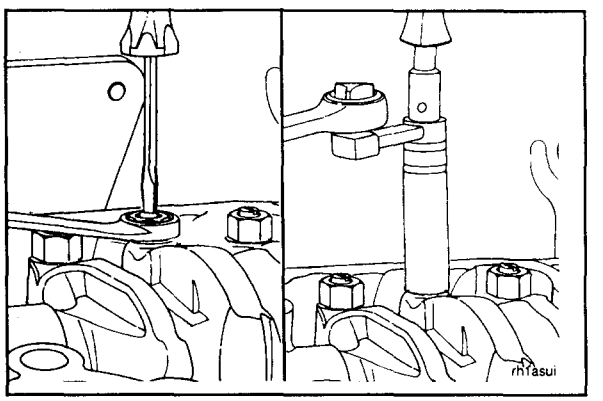

8. Adjust the crossheads and the valves on cylinder No. 5 **before** rotating the accessory drive to the next valve set mark. Refer to "Crossheads Adjustment" and "Valve Adjustment" in this Procedure.

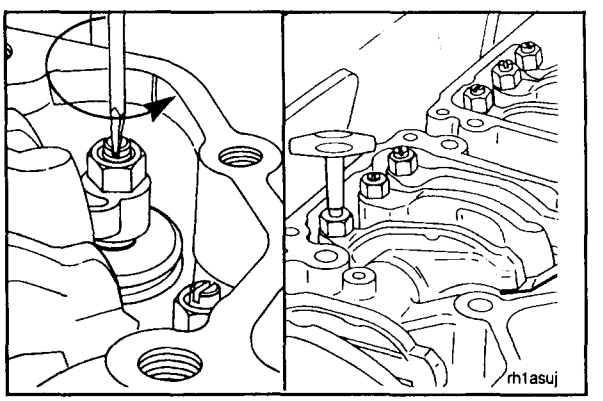

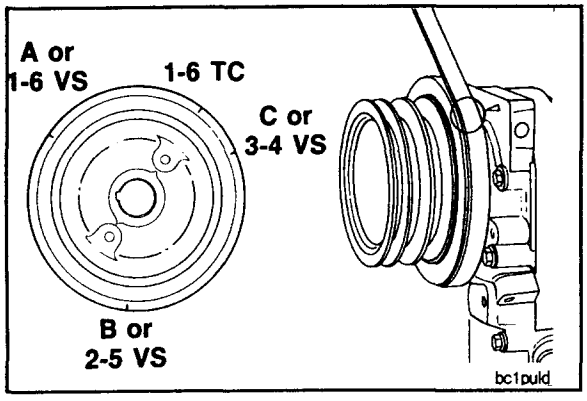

9. After adjusting the crossheads and the valves on cylinder No. 5, rotate the accessory drive; and align the next valve set mark on the accessory drive pulley with the pointer on the gear cover.

Injector and Valve Adjustment Sequence

Bar Engine in Direction of Rotation	Pulley Position	Set Cylinder Injector	Set Cylinder Valve
Start	A	3	5
Advance to	B	6	3
Advance to	C	2	6
Advance to	A	4	2
Advance to	B	1	4
Advance to	C	5	1

Firing Order: 1-5-3-6-2-4

oi100vd

10. Adjust the appropriate injector, the crossheads, and the valves following the Injector and Valve Adjustment Sequence Chart.
11. Repeat the process to adjust all injectors, crossheads, and valves correctly.

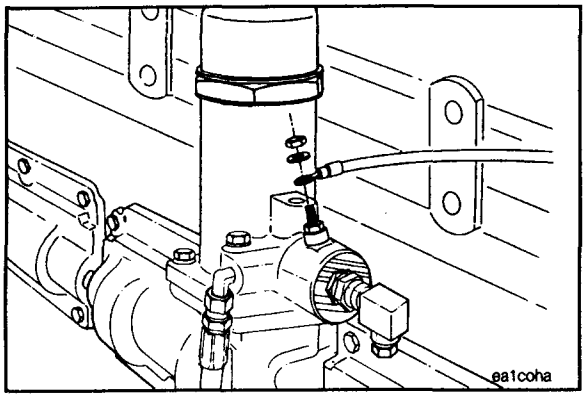

12. Connect the electrical wire to the MVT solenoid after the adjustments have been completed.

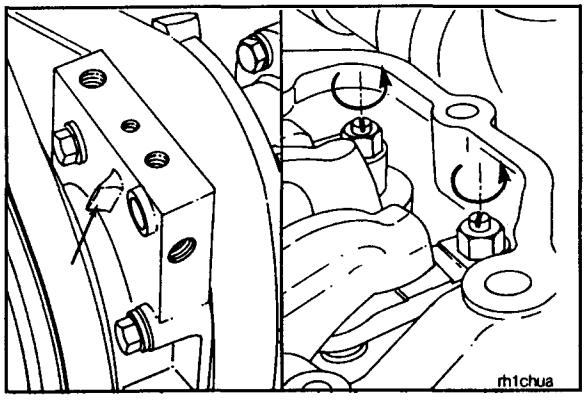

Crosshead Adjustment

NOTE: Crosshead adjustment **must** always be made before attempting to adjust the valves.

1. With the "A" valve set mark aligned with the pointer on the gear cover and both valves closed on cylinder No. 5, loosen the crosshead adjusting screw lock nuts on the intake and the exhaust valve crossheads for cylinder No. 5.

NOTE: Use the following procedure to adjust both the intake and the exhaust crossheads:

2. Turn the adjusting screw out at least one turn.
3. Hold the crosshead down against its mating valve stems.
4. Turn the adjusting screw in until it touches the top of the valve stem but does **not** raise the crosshead.

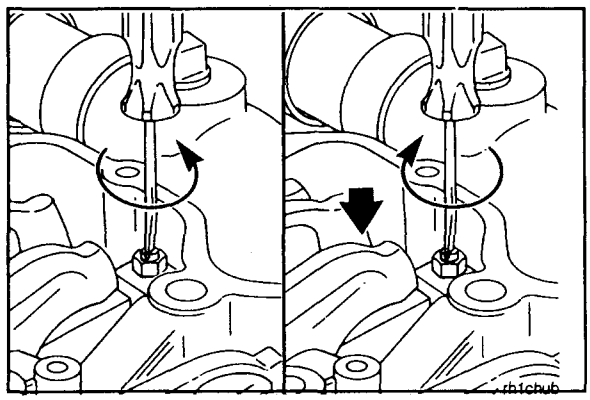

5. Hold the adjusting screw in this position. The adjusting screw **must not** turn when the lock nut is tightened to its torque value. Tighten the lock nut. The following torque values are given with and without Part No. ST-669 Torque Wrench Adapter (1):

	Torque Values N•m	ft-lb
Less Jacobs® Brake:		
(with adapter)	35	25
(less adapter)	40	30
With Jacobs® Brake Model 401 adjusting screw (exhaust crosshead only):		
(with adapter)	30	22
(less adapter)	35	25

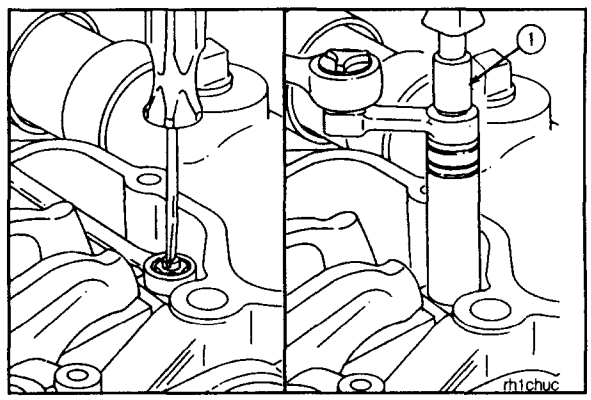

6. Adjust the intake and the exhaust valves on No. 5 cylinder **before** rotating the accessory drive to the next valve set mark. Refer to "Valve Adjustment" in this Procedure.

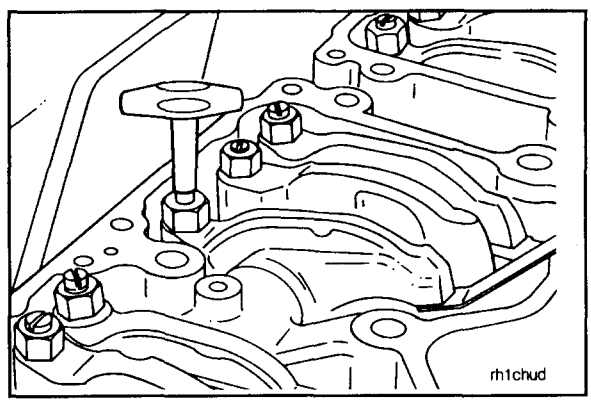

Valve Adjustment

1. With the "A" valve set mark aligned with the pointer on the gear cover and both valves closed on cylinder No. 5, loosen the lock nuts on the intake and the exhaust valve adjusting screws.

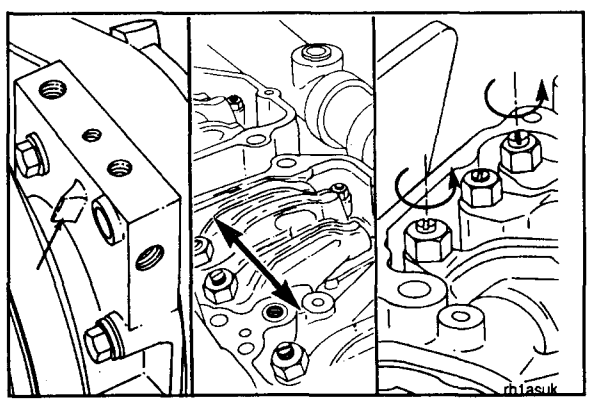

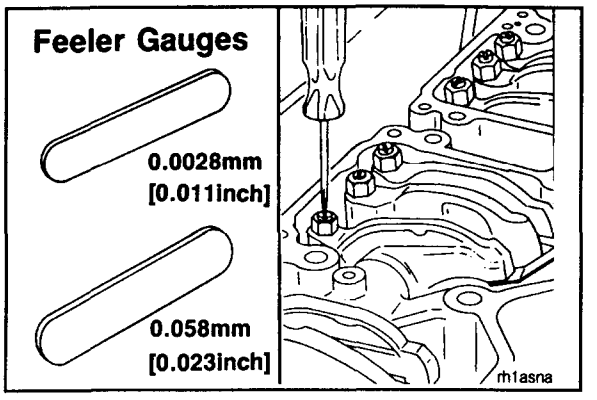

2. Select a feeler gauge for the correct valve lash specification.

Valve Lash Specifications	
Intake	**Exhaust**
0.028 mm	0.058 mm
[0.011-inch]	[0.023-inch]

3. Insert the feeler gauge between the top of the crosshead and the rocker lever pad.

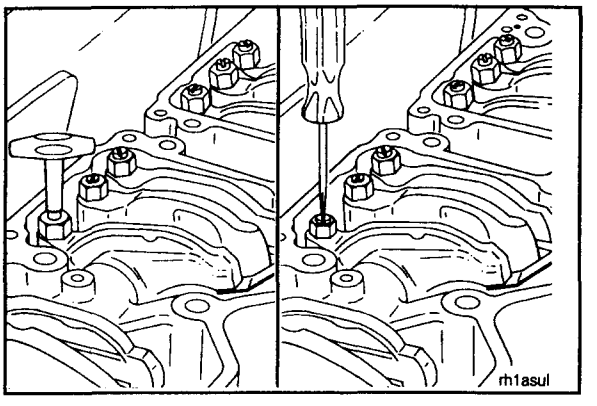

4. Two different methods for establishing valve lash clearance are described below. Either method can be used; however, the torque wrench method has proven to be the most consistent. It eliminates the need to feel the drag on the feeler gauge.

   a. **Torque Wrench Method:** Use Part No. 3376592 Inch Pound Torque Wrench (normally used to set preload on top stop injectors), and tighten the adjusting screw to 0.68 N•m [6 in-lbs] torque.

   b. **Feel Method:** Tighten the adjusting screw until a slight drag is felt on the feeler gauge.

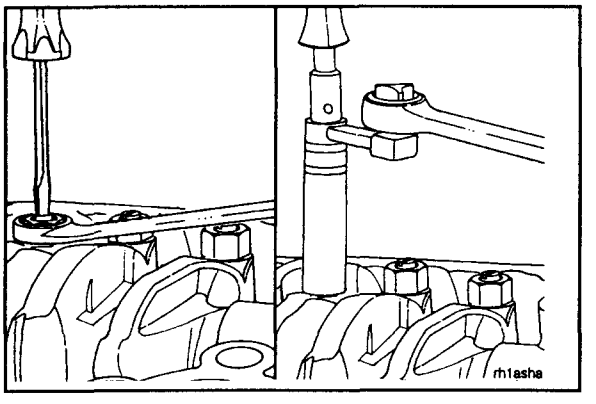

5. Hold the adjusting screw in this position. The adjusting screw **must not** turn when the lock nut is tightened. Tighten the lock nut to the following torque values:

With Torque Wrench Adapter, Part No. ST-669 (1)	45 N•m [35 ft-lbs]
Without Adapter	60 N•m [45 ft-lbs]

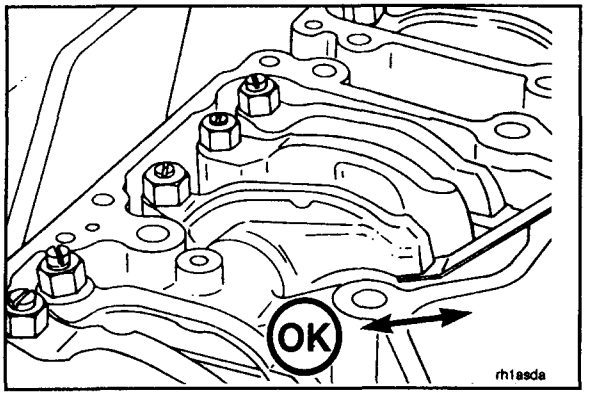

6. After tightening the lock nut to the correct torque value, check to make sure the feeler gauge will slide backward and forward between the crosshead and the rocker lever with only a slight drag.

7. If using the feel method, attempt to insert a feeler gauge that is 0.03 mm [0.001-inch] thicker between the crosshead and the rocker lever pad. The valve lash is **not** correct when a thicker feeler gauge will fit.

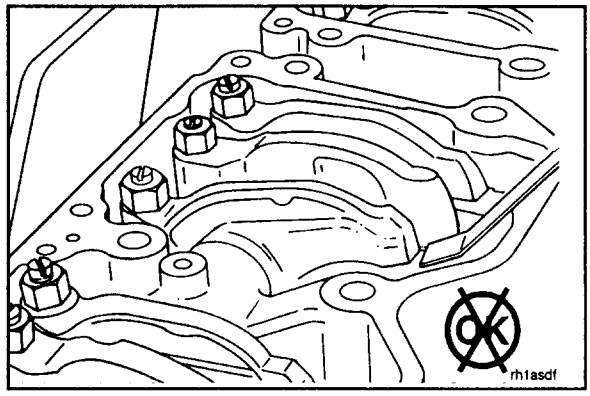

8. After adjusting the injector on cylinder No. 3 and the crossheads and the valves on cylinder No. 5, rotate the accessory drive; and align the next valve set mark with the pointer.

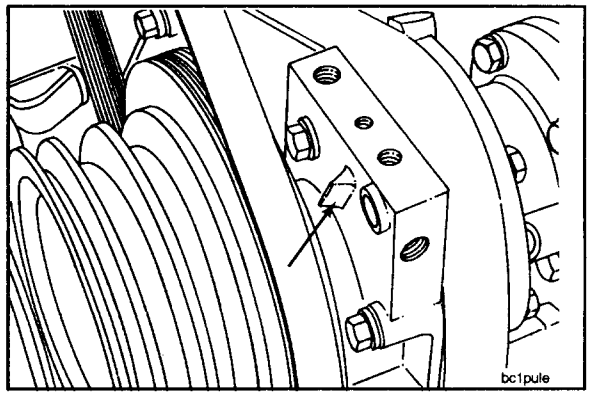

9. Adjust the appropriate injector, the crossheads, and the valves following the Injector and Valve Adjustment Sequence Chart.
10. Repeat the process to adjust all injectors, crossheads, and valves correctly.

Injector and Valve Adjustment Sequence

Bar Engine in Direction of Rotation	Pulley Position	Set Cylinder Injector	Set Cylinder Valve
Start	A	3	5
Advance to	B	6	3
Advance to	C	2	6
Advance to	A	4	2
Advance to	B	1	4
Advance to	C	5	1

Firing Order: 1-5-3-6-2-4

oi100vd

11. If the engine is equipped with a Jacobs® Brake, refer to Jacobs® Brake adjustment in Procedure 7-05.
12. Install the rocker housing covers. Refer to Procedure 7-02.

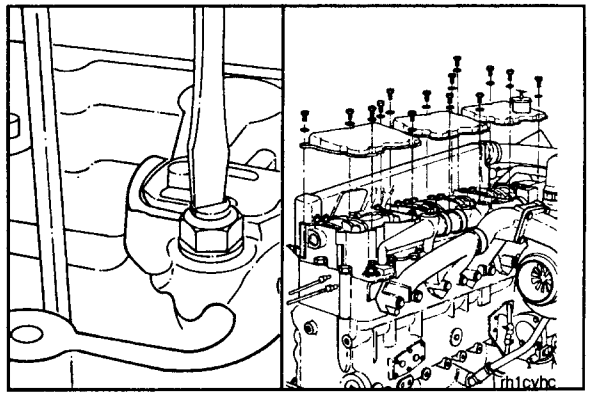

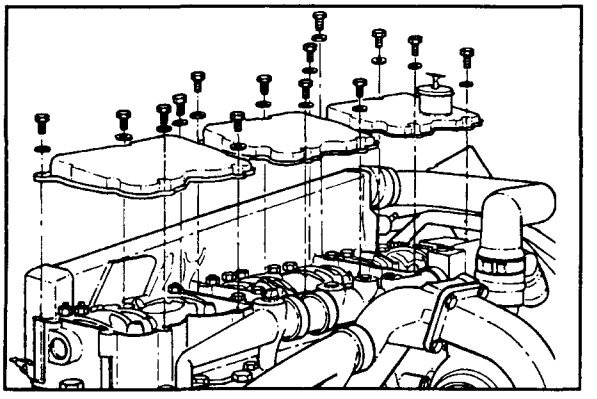

Jacobs® Engine Brake - Adjust (7-05)

Adjustment of Jacobs® Models 401, 400, 400 H, 44B, 25B and 30E Engine Brake - NH/NT

1. Remove the rocker housing cover(s). Refer to Procedure 7-02.

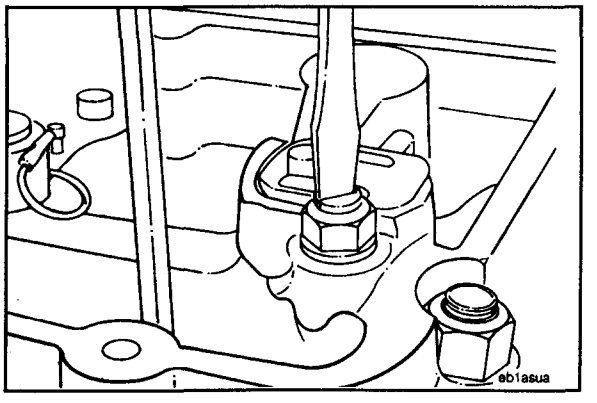

Slave Piston Adjustment

Caution: To get maximum brake operating efficiency and to prevent engine damage, it is important to follow the instructions listed below.

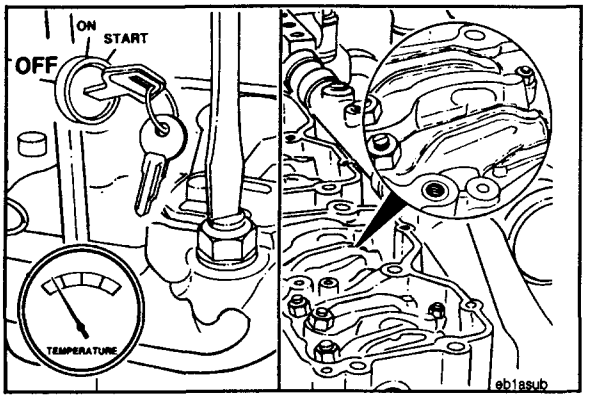

1. Slave piston adjustment **must** be made with the engine stopped and cold (stabilized water temperature of 60 °C [140°F] or below). The exhaust valves on the cylinder which are to be adjusted **must** be in the closed position.

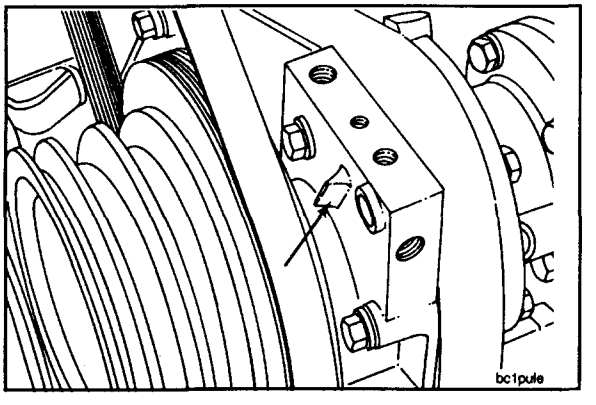

2. Rotate the accessory drive **clockwise**, and align the valve set mark on the accessory drive pulley with the pointer on the gear cover.

3. Adjust the appropriate slave piston by following the Injector and Valve Adjustment Sequence Chart.

Injector and Valve Adjustment Sequence

Bar Engine in Direction of Rotation	Pulley Position	Set Cylinder Injector	Set Cylinder Valve
Start	A	3	5
Advance to	B	6	3
Advance to	C	2	6
Advance to	A	4	2
Advance to	B	1	4
Advance to	C	5	1

Firing Order: 1-5-3-6-2-4

oi100vd

4. The slave piston adjusting screw in models 25B, 30, and 30E engine brake is a solid screw. Use a hexagon head socket wrench to adjust the screw.
5. The slave piston adjusting screw used in models 401, 400, 400 H, and 44B contains an automatic lash adjuster. Use a screwdriver to adjust this screw.

NOTE: Adjustment procedures and clearances for all of the above models are the same.

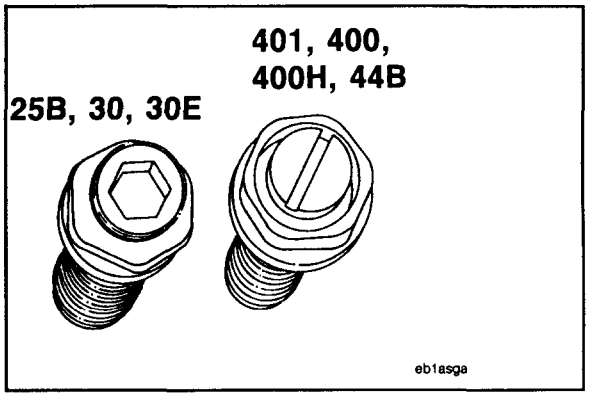

6. Loosen the lock nut. Loosen the slave piston adjusting screw (1) on the cylinder which has the exhaust valves closed.
7. Loosen the adjusting screw until the slave piston (2) is seated in the engine brake housing (3).

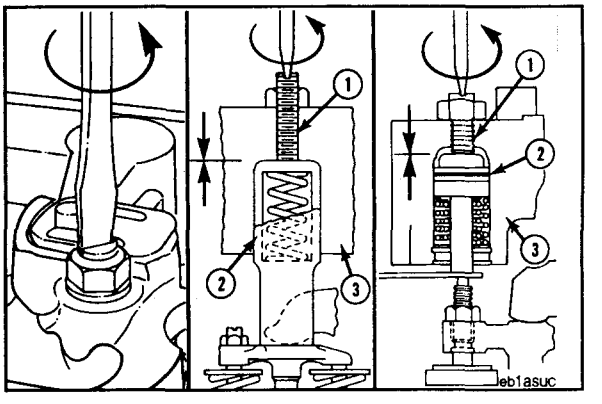

8. Insert a 0.46 mm [0.018-inch] Jacobs® feeler gauge (4), Part No. 3087, between the slave piston and the crosshead (5) or between the slave piston and the actuating pin in the crosshead adjusting screw (6) on Models 401 A, B, and C only.
9. Turn the adjusting screw in until a slight drag is felt on the feeler gauge.

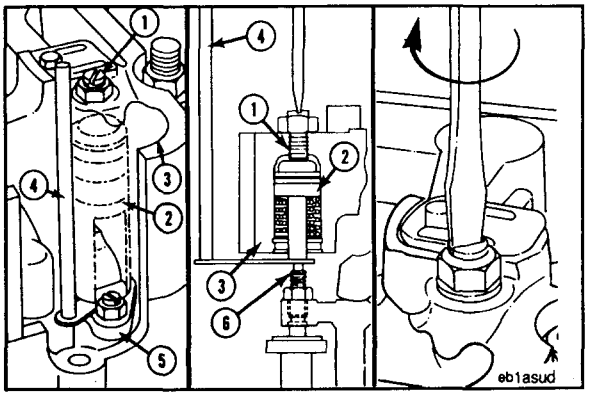

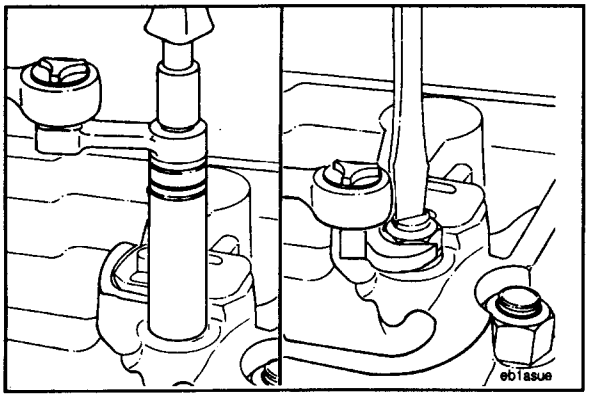

10. Hold the adjusting screw in position. The adjusting screw **must not** turn when the lock nut is tightened. Tighten the lock nut to the following torque values:

With Torque Wrench Adapter, Part No. St-669 (1)	30 N•m [22 ft-lbs]
Without Adapter	35 N•m [25 ft-lbs]

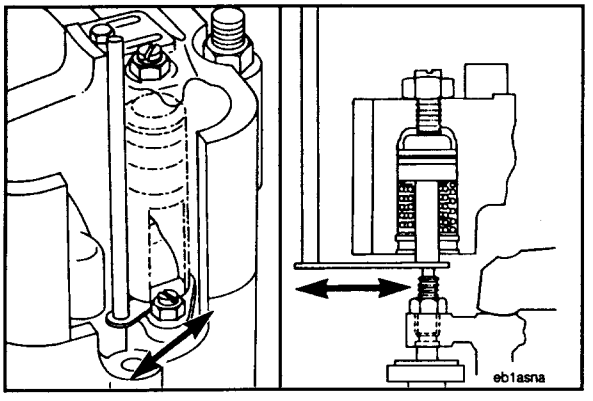

Caution: After the slave piston adjusting screw lock nut is tightened to the correct torque value, check the clearance with the feeler gauge again. Do not overtighten the adjusting screw lock nut. Too much torque on the lock nut can cause the reset mechanism in the slave piston adjusting screw to seize and will cause engine damage.

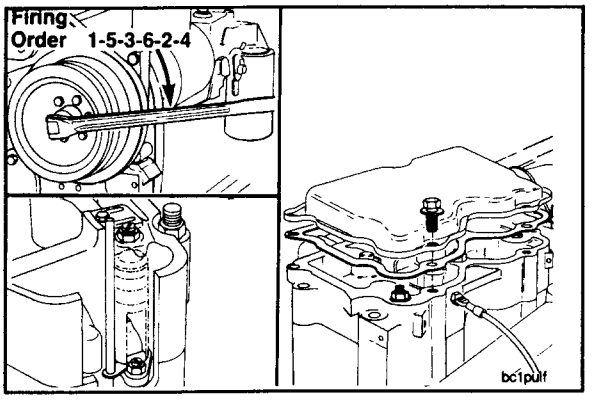

11. Continue to rotate the accessory drive in firing order rotation, and use this procedure to adjust all six slave pistons at the correct valve set positions.
12. Install the rocker housing cover(s). Refer to Procedure 7-02.

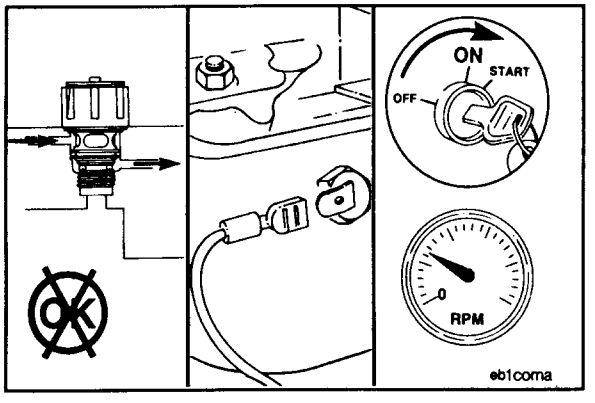

Jacobs® Engine Brake - Check (7-06)

An engine equipped with a Jacobs® Engine Brake may fail to start or perform correctly due to one or more of the following:

1. Engine will **not** start due to a stuck oil flow solenoid valve.

NOTE: To check for a stuck solenoid valve, do the following:

a. Disconnect the electrical wires to the engine brakes, and operate the engine.

NOTE: If exhaust gases can be heard escaping past the exhaust valves, the solenoid valve or valves **must** be replaced. Contact an authorized Jacobs® Brake dealer.

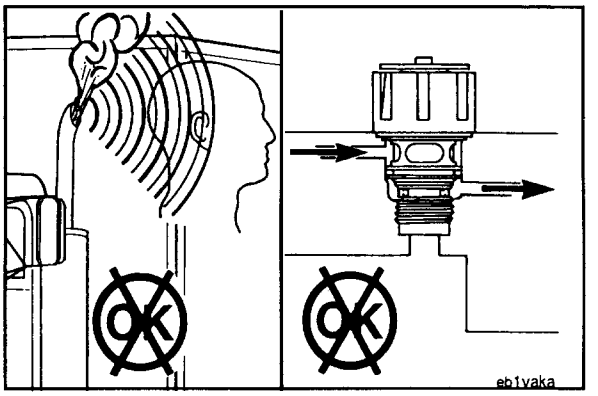

2. Engine will **not** start or runs rough due to a damaged or incorrectly adjusted slave piston.

NOTE: To check the slave piston, do the following:

a. Remove the rocker housing cover(s). Refer to Procedure 7-02.

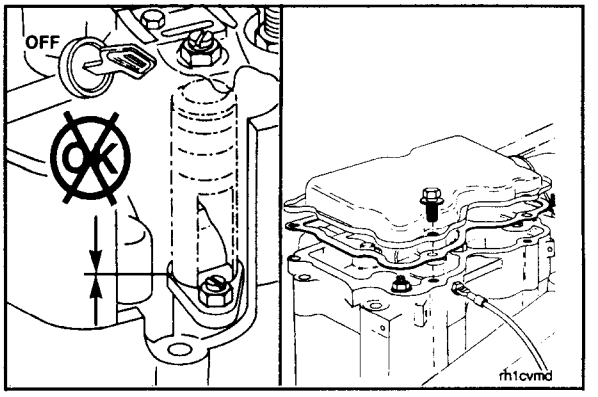

b. Check the slave piston clearance. The clearance **must** be 0.46 mm [0.018-inch].

NOTE: Refer to "Jacobs® Brake Adjust" in Procedure 7-05 to adjust the clearance.

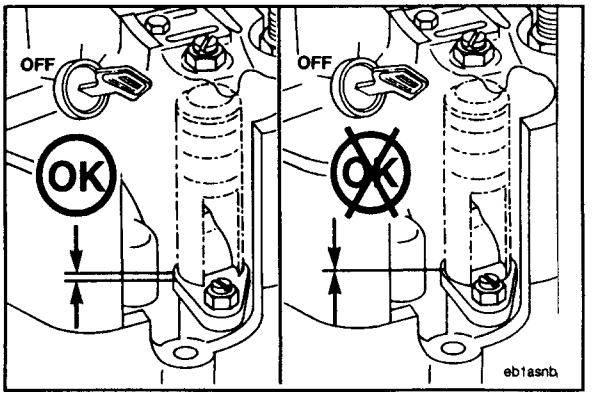

c. Remove the Jacobs® Brake assembly, and visually inspect the slave piston for damage. Refer to Procedure 7-07.

NOTE: If the slave piston is damaged, contact an authorized Jacobs® Brake dealer for repair.

d. Install the rocker housing cover(s). Refer to Procedure 7-02.

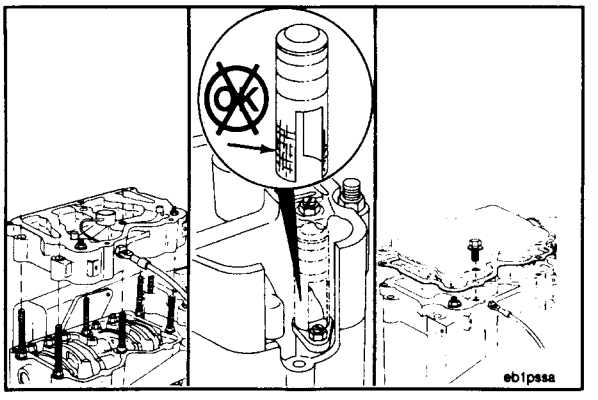

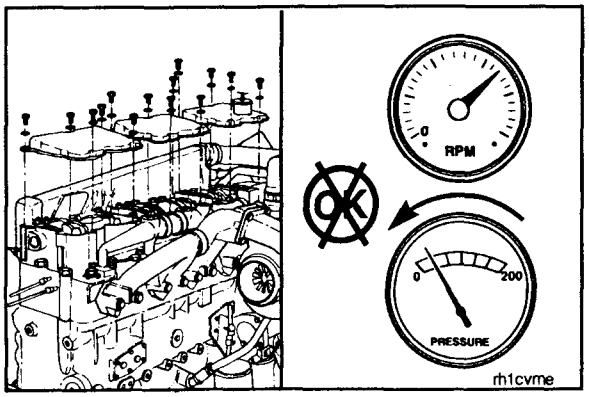

3. Sudden drop in lubricating oil pressure.
   a. Remove the rocker housing cover(s). Refer to Procedure 7-02.
   b. Operate the engine, and check for the following problems:

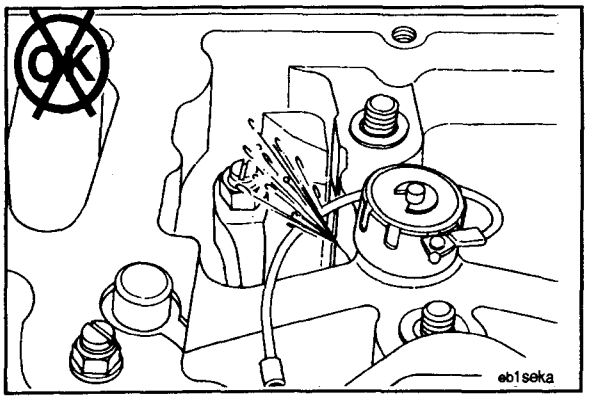

- Oil inlet supply drilling rubber seal missing or damaged. Refer to Procedure 7-05.
- Nuts loose or missing from the housing hold down studs.

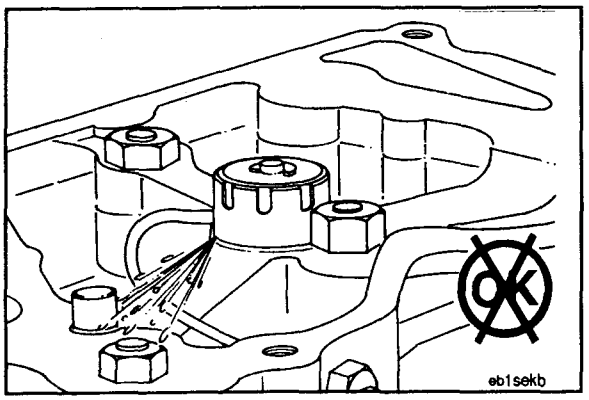

- Upper solenoid valve seal ring missing or damaged.

NOTE: If repairs are necessary, contact an authorized Jacobs® Brake dealer.

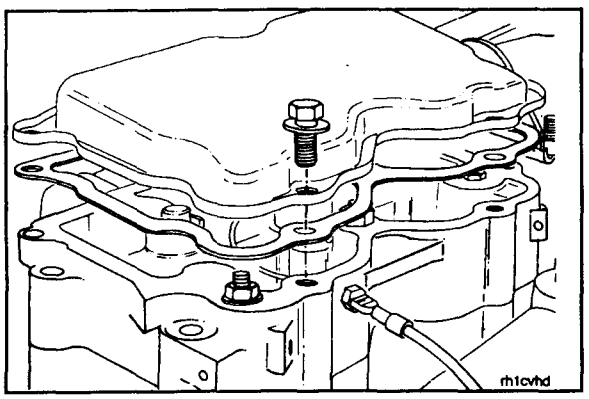

c. Install the rocker housing cover(s). Refer to Procedure 7-02.

4. Engine misfiring or loss of power.
   a. Remove the rocker housing cover(s). Refer to Procedure 7-02.
   b. Adjust the slave piston clearance. Refer to "Jacobs® Brake Adjust" in Procedure 7-05 or the appropriate Jacobs® Brake Manual.

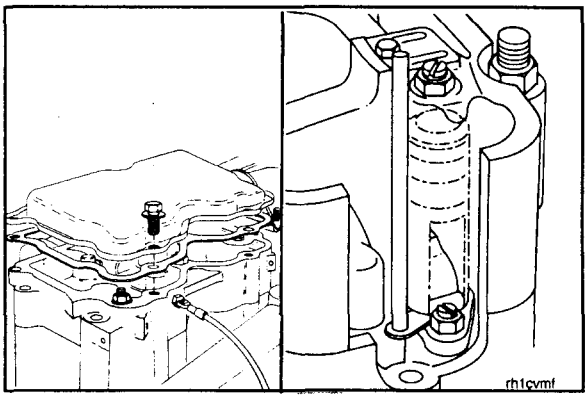

   c. Install the rocker housing cover(s). Refer to Procedure 7-02.

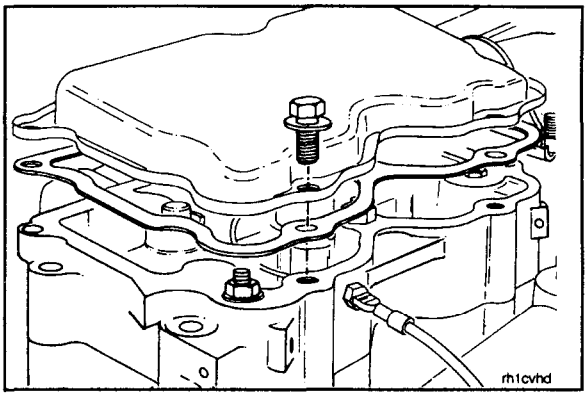

Jacobs® Engine Brake - Replace (7-07)

Remove

1. Remove the rocker housing cover(s). Refer to Procedure 7-02.
2. Disconnect the electrical control wires from the terminal bushing in the engine brake housing.

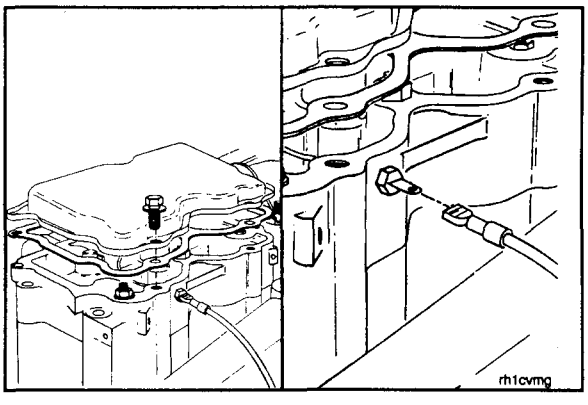

3. Remove the hold down nuts, the lifting brackets, the spacers, and the brake housing.

NOTE: It is also necessary to remove the fan hub brace when removing the front Jacobs® Brake assembly (all model brakes **except** 401 A, B, and C).

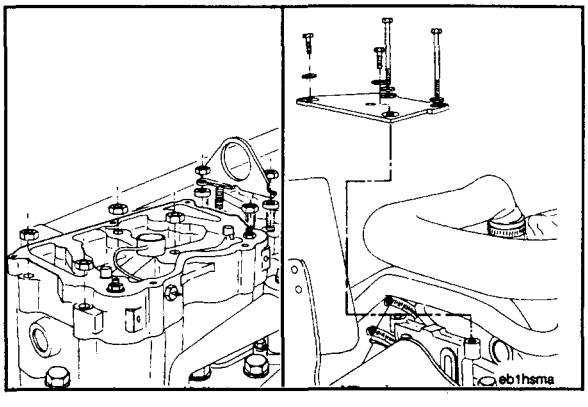

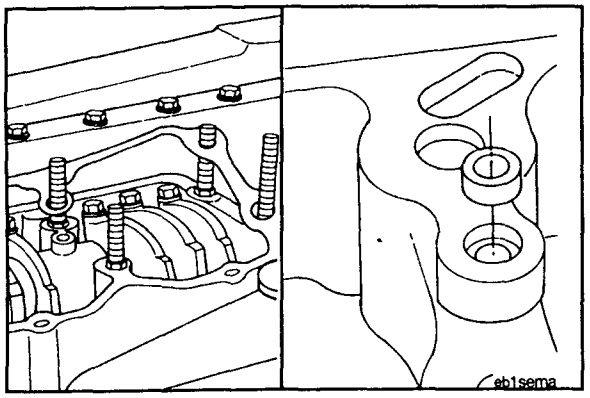

4. Remove the brake housing gasket.
5. Remove the rubber seal from the oil inlet supply drilling in the center web on the bottom of the brake housing.

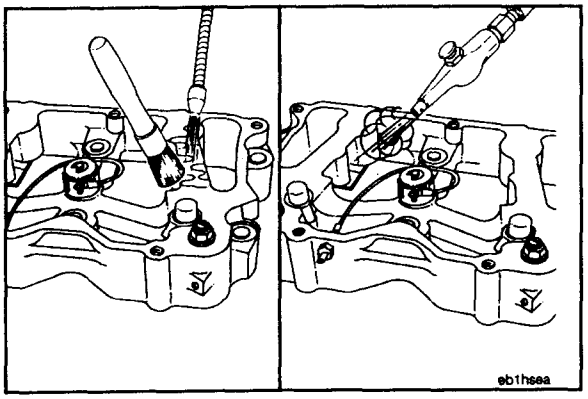

Clean and Inspect

1. Use an approved solvent to clean the housings, and dry with compressed air.

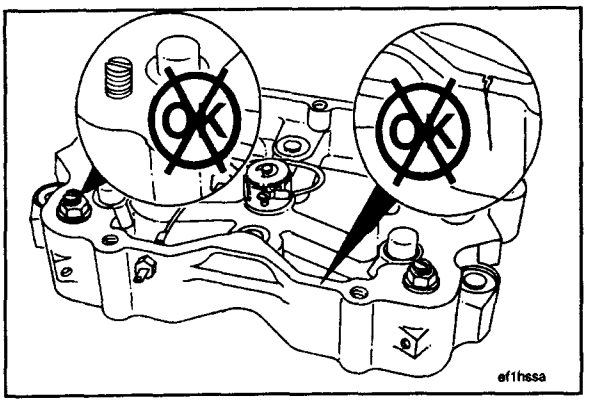

2. Visually inspect the housing for any missing or damaged parts.

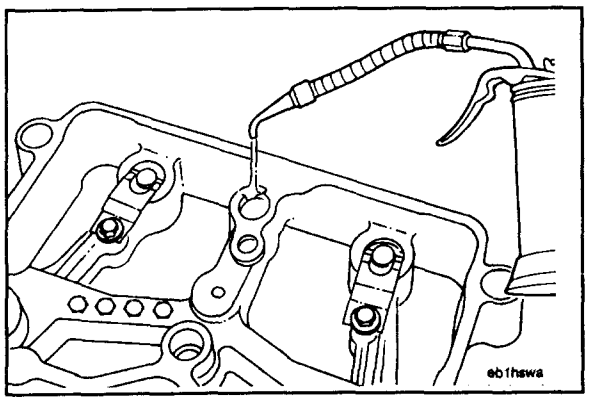

3. Apply a thin film of clean 15W-40 oil to the machined surfaces.

Install

1. Loosen the lock nuts on the slave piston adjusting screws.
2. Loosen the adjusting screw (1) until the slave piston (2) is seated in the engine brake housing (3). Make sure the slave piston is fully retracted.

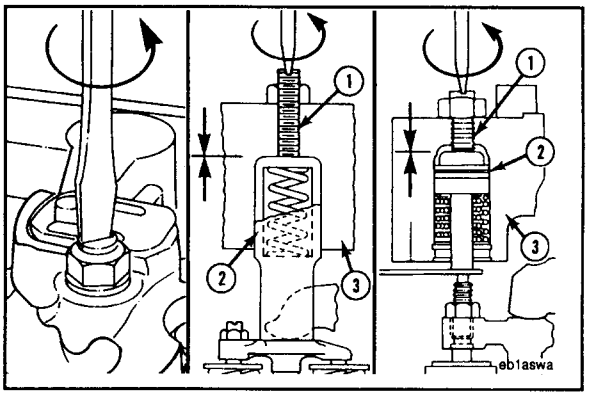

3. Install a new Jacobs® Brake gasket on the rocker housing.
4. Install a new rubber seal in the oil inlet supply drilling in the center web on the bottom of the housing. Use a light film of grease to hold the seal in place.

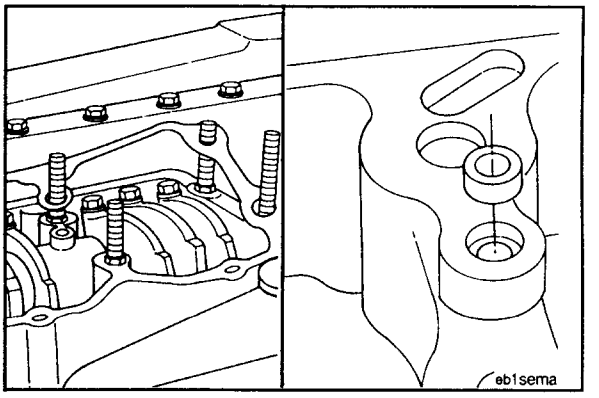

5. Carefully install the brake assembly over the six mounting studs so the rubber seal will **not** be removed from the oil transfer hole in the housing. The assembly **must** drop into place without interfering with the rocker levers.

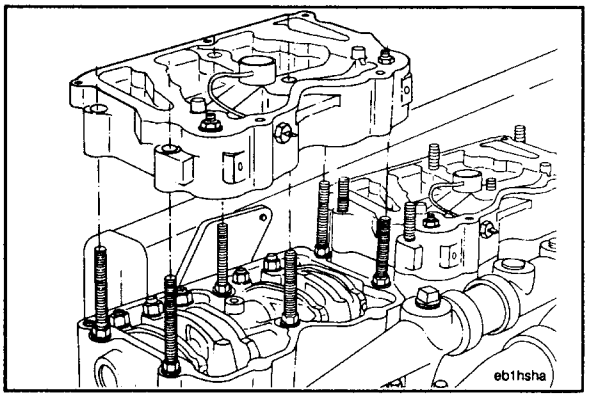

6. Install the spacers and the lifting brackets.
7. Install the fan hub brace (front brake assembly only) on all model brakes **except** the 401 A, B, and C.

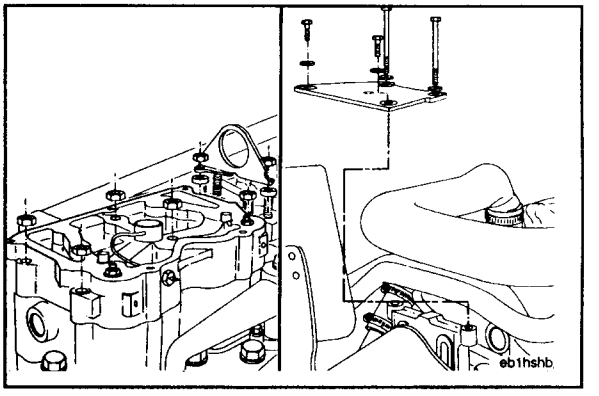

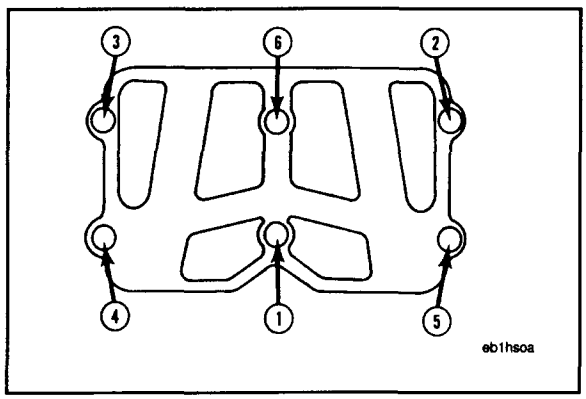

8. Install the Jacobs® hold down nuts. Tighten the nuts to 80 N•m [60 ft-lbs] torque in the sequence shown.

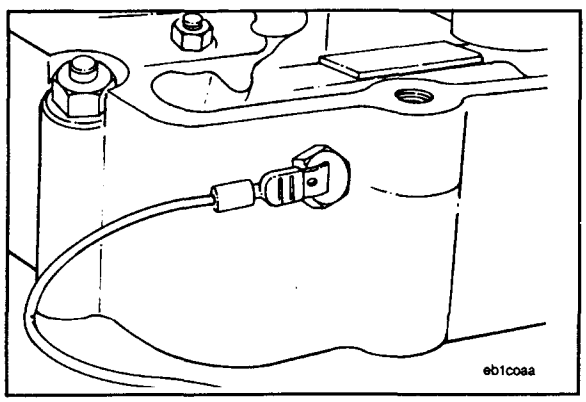

9. Connect the electrical control wire to the terminal bushing in the Jacobs® Brake housing.

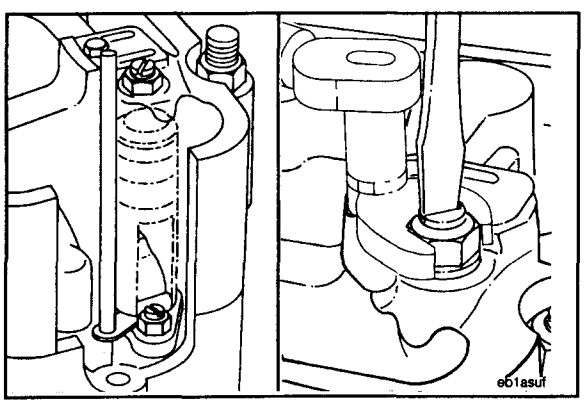

10. Adjust the Jacobs® Brake slave piston clearance. Refer to Procedure 7-05.

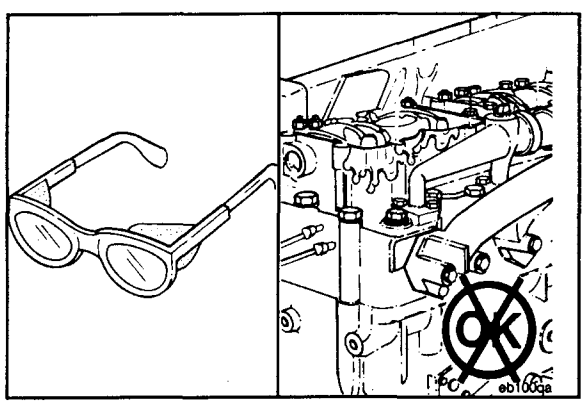

Warning: Wear eye protection and do not put your face over the engine area. Take precautions to prevent oil leakage down on the engine. Whenever the engine is operating and the valve covers are removed, oil splashing in the engine brake area can cause personal injury.

11. Use the following procedure to remove the air from the oil passages in the brake unit(s) and to check its operation:
    - Start and operate the engine at low idle for 5 to 10 minutes.
    - Accelerate the engine to approximately 1,800 RPM.
    - Release the throttle **before** manually pressing down on the solenoid armature.
    - Repeat this procedure five or six times.

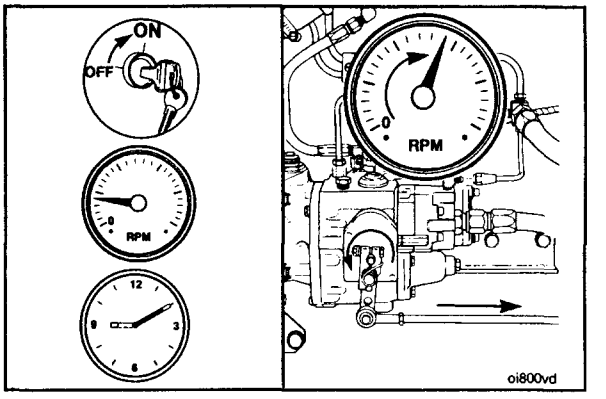

12. Install the rocker housing cover(s). Refer to Procedure 7-02.

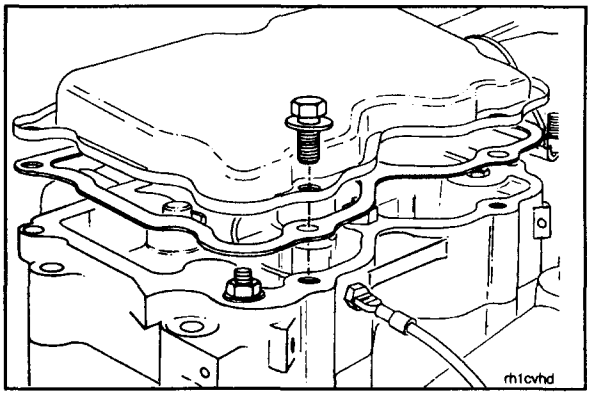

Push Rods - Replace (7-08)

Remove

1. Remove the air crossover connection (Big Cam III only). Refer to Procedure 3-13.
2. Remove the rocker housing covers. Refer to Procedure 7-02.

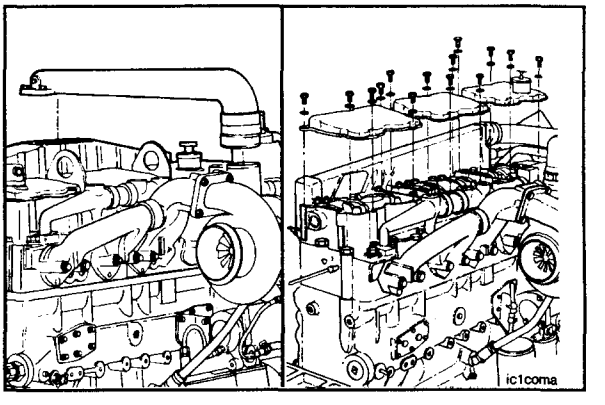

3. Loosen the lock nut on each rocker lever adjusting screw.
4. Loosen the adjusting screw.

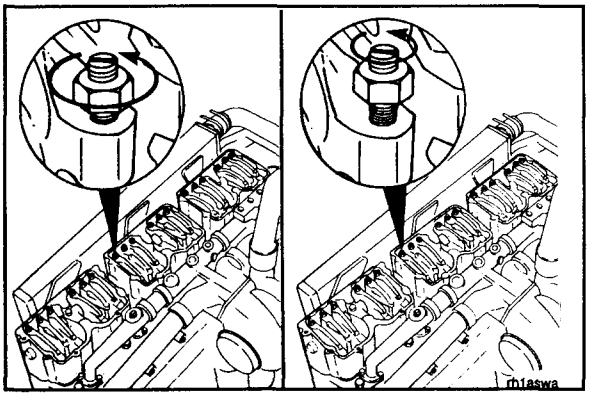

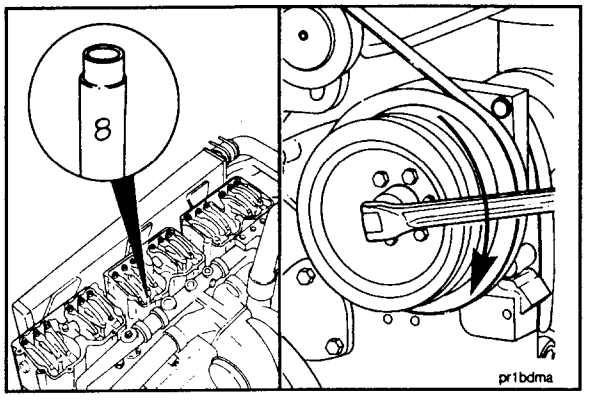

5. Remove the push rods.

NOTE: To prevent increased wear, mark each push rod as it is removed so it can be installed back in its original location.

NOTE: Some push rods are under compression due to the valves being open. Rotate the crankshaft **clockwise** with the accessory drive pulley to relieve the spring tension.

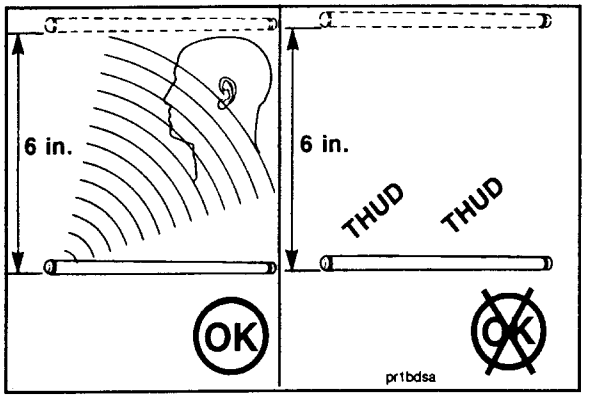

Inspect

1. Inspect for engine oil in the push rods as follows:
   a. Hold the push rod horizontally and drop it from a height of 6 inches on a concrete floor or a metal surface.
   b. The push rod may be used if a ringing sound is heard.
   c. If a dull (or non-ringing) sound is heard, the push rod contains engine oil and **must** be discarded.

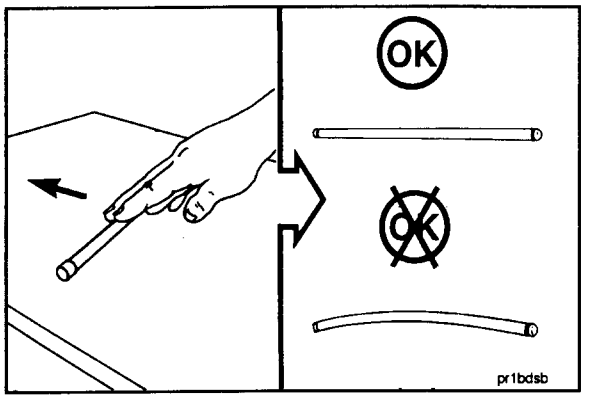

2. Inspect the straightness of the push rod by rolling it on a level bench. Replace the push rod if it is bent. Do **not** use a bent push rod.

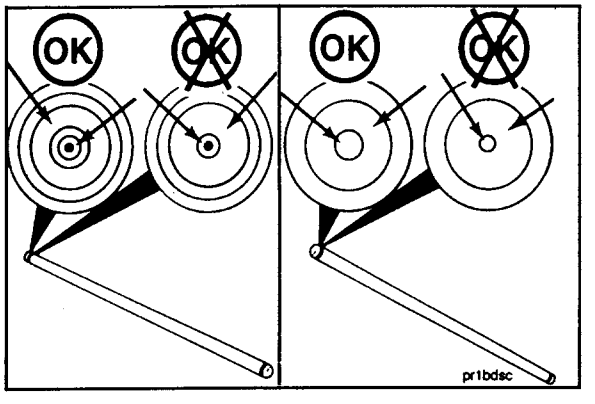

3. Visually inspect the ball and the socket ends of the push rods for uneven wear or scratches.

4. Visually inspect the push rod ball end for excessive wear.
5. Visually inspect the seating pattern in the push rod socket for excessive wear.

NOTE: If excessive wear is found on the push rod ball end, refer to Procedure 7-13 to inspect the cam follower sockets.

NOTE: If excessive wear is found on the socket end, refer to Procedure 7-13 to inspect the adjusting screws.

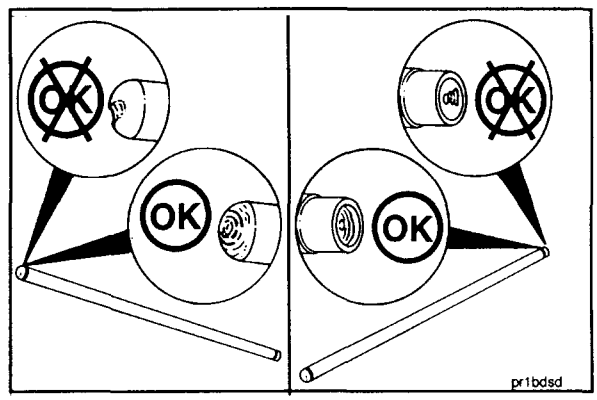

Install

1. Use clean 15W-40 oil to lubricate the ball end of the push rods.

NOTE: The injector push rods (1) are larger in diameter than the valve push rods (2).

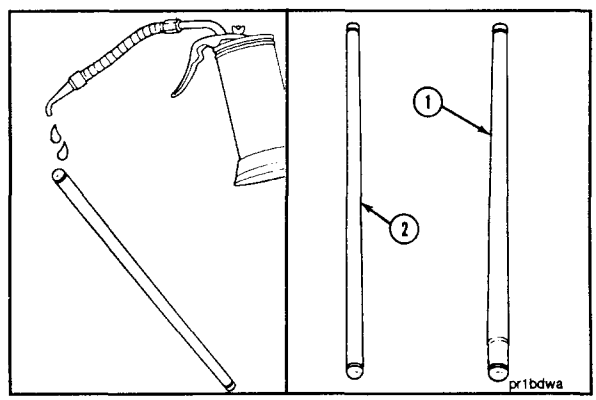

2. Install the push rods in the corresponding numbered location.

NOTE: The crankshaft **must** be rotated **clockwise** to install all the push rods.

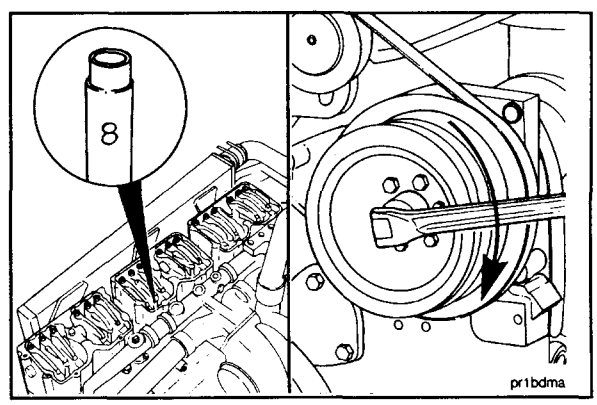

3. Install the injector push rods in the corresponding numbered location.
4. Install the valve push rods in the corresponding numbered location.
5. Put the push rods under the rocker lever adjusting screws.
6. Tighten the adjusting screws enough to hold the push rods in position.

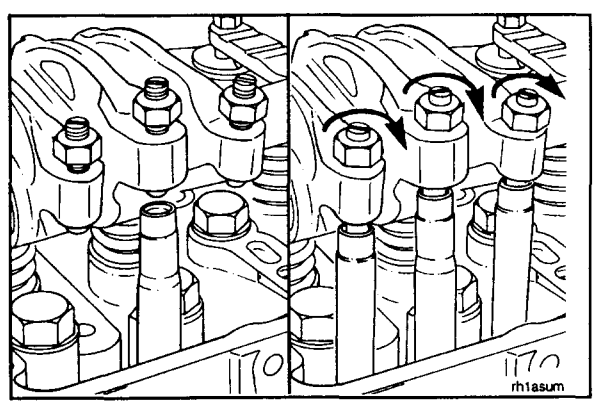

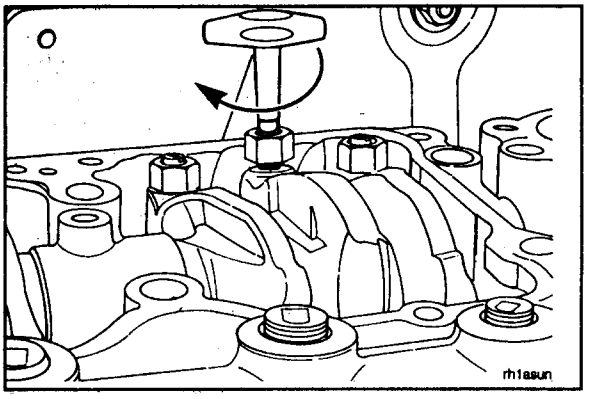

7. Adjust the valves and the injectors. Refer to Procedure 7-04.

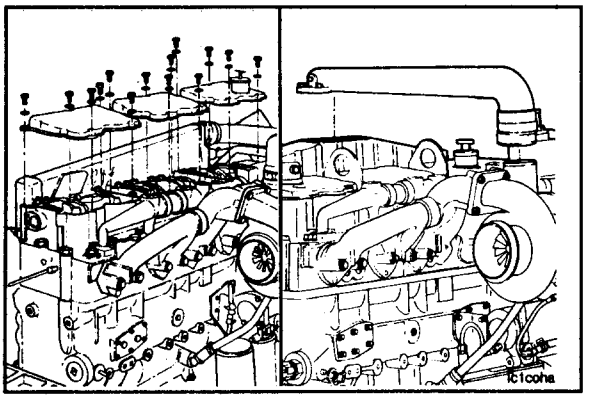

8. Install the rocker housing covers. Refer to Procedure 7-02.
9. Install the air crossover connection (Big Cam III only). Refer to Procedure 3-13.

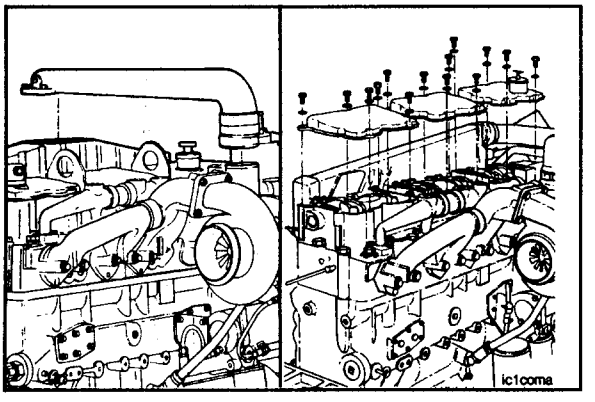

Rocker Levers/Rocker Lever Housings - Replace (7-09)

Remove

1. Remove the air crossover connection (Big Cam III only). Refer to Procedure 3-13.
2. Remove the rocker housing covers. Refer to Procedure 7-02.

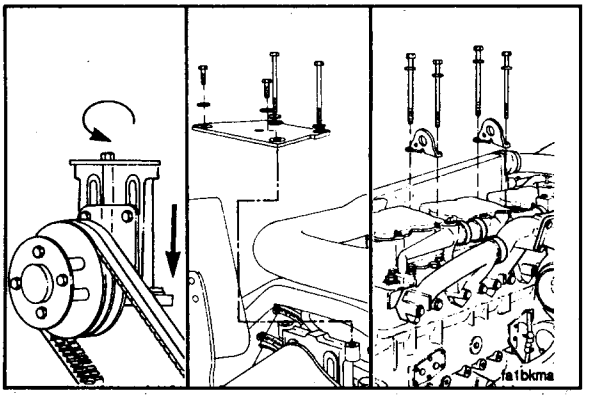

3. Release the fan drive belt tension. Remove the fan hub adjusting screw (Big Cam III only). Refer to Procedure 1-20.
4. Remove the aftercooler water transfer tube support bracket on Big Cam IV engines.
5. Remove the fan bracket brace between the fan bracket and the rocker housing.
6. Remove the engine lifting brackets.

7. Loosen the rocker lever adjusting screw lock nuts.
8. Turn the adjusting screws **counterclockwise** two full turns.

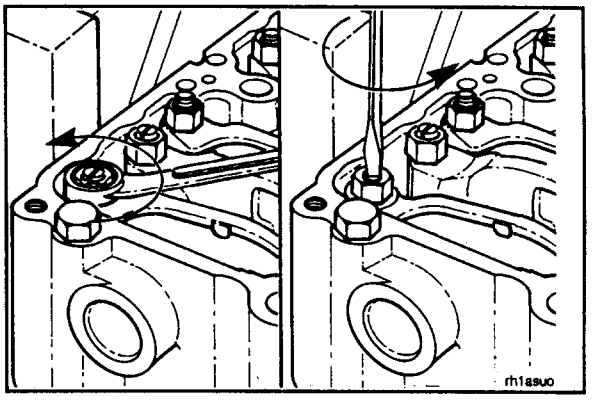

9. Remove the rocker housing mounting capscrews.

NOTE: To prevent increased wear, mark each rocker lever housing as it is removed so it can be installed back in its original location.

10. Remove the rocker lever housings.
11. Remove the gaskets.

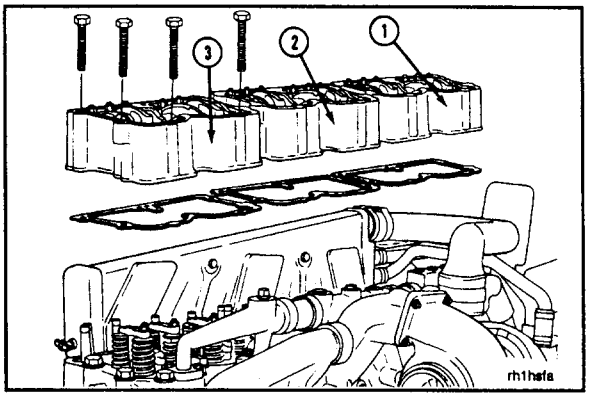

Disassemble

NOTE: To prevent increased wear, mark each rocker lever as it is removed so it can be installed back in its original location.

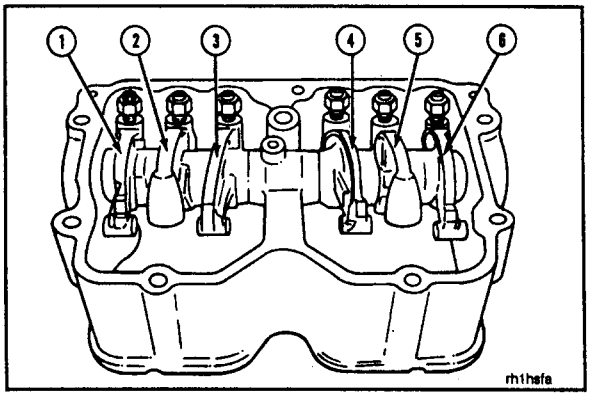

1. Remove the set screw.
2. Remove the shaft from the housing.

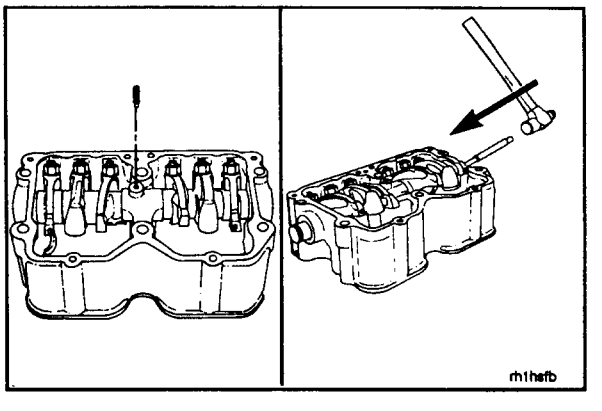

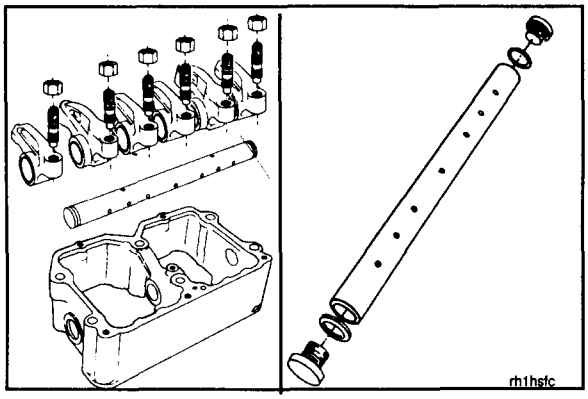

3. Remove the rocker levers.
4. Remove the lock nuts and the adjusting screws from the rocker levers.
5. Remove the plugs from the shaft.

NOTE: Current rocker lever shafts have threaded plugs. Threaded plugs **must** be removed with an allen wrench.

6. Remove the O-rings.

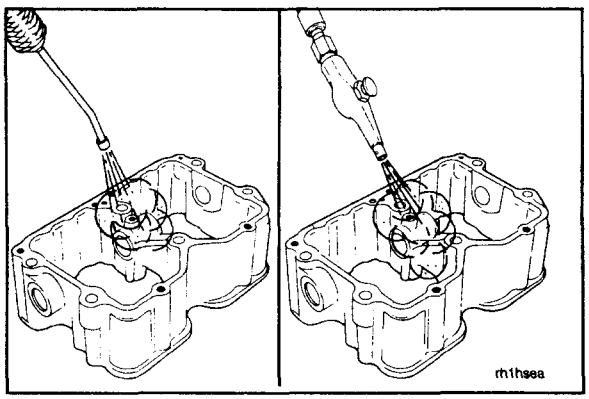

Clean and Inspect

Rocker Lever Housing

1. Steam clean the rocker lever housings.
2. Dry with compressed air.

NOTE: Make sure the breather vent hole is free of dirt or other deposits.

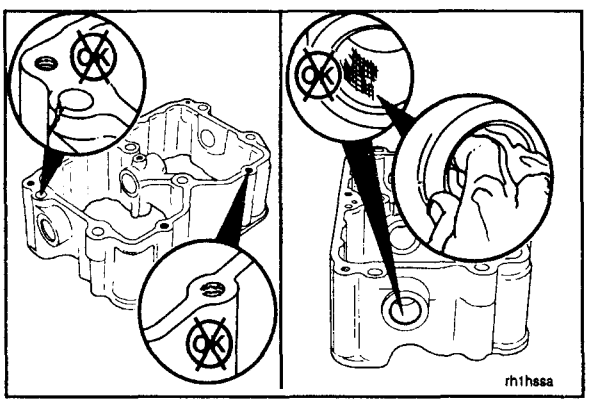

3. Visually inspect the housings for cracks or damage, and replace if necessary.
4. Visually inspect the capscrew holes for damaged threads. If threads are damaged, refer to the "Alternative Repair Manual," Bulletin No. 3379035.
5. Visually inspect the rocker lever shaft bore. Remove any burrs or sharp edges.

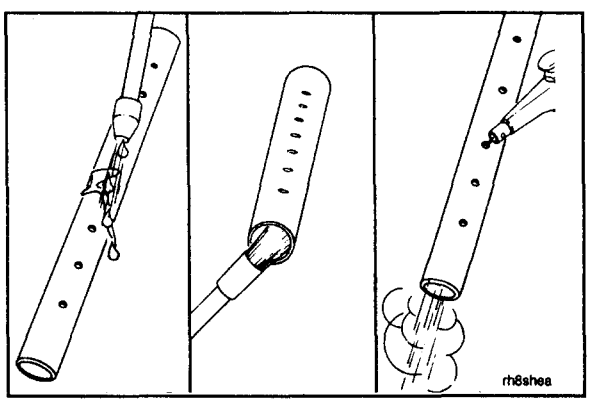

Rocker Lever Shaft

1. Use steam or solvent to clean the rocker lever shaft.
2. Use a bottle brush to clean the shaft bore.
3. Dry with compressed air.

4. Visually inspect the shaft for cracks or damages.
5. Visually inspect the thread condition of the shafts with internal threads.
6. Measure the rocker lever shaft's outside diameter in the bushing wear area.

Rocker Lever Shaft O.D.		
mm		in
28.50	MIN	1.122
28.55	MAX	1.124

7. Replace the rocker lever shafts as necessary.

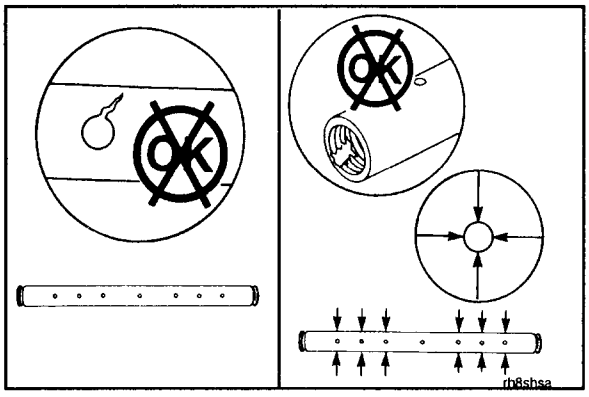

Rocker Levers

1. Use steam or solvent to clean the rocker levers, and dry with compressed air.

NOTE: Be sure to blow out the oil passages.

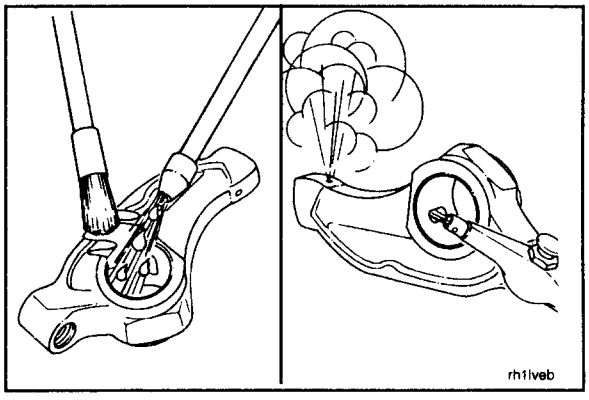

2. Visually inspect the rocker levers for cracks or unusual wear and thread condition.

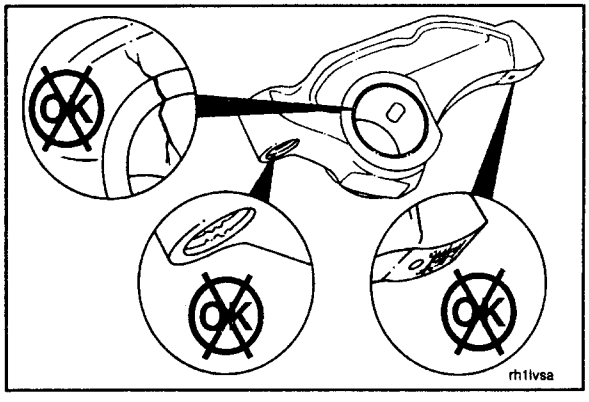

3. Measure the rocker lever bushing bore inside diameter.

Rocker Lever Bushing I.D. (Installed)		
mm		in
28.562	MIN	1.1245
28.666	MAX	1.1286

NOTE: Replace the rocker lever bushings which are worn beyond the maximum limit. Refer to the "NT Engine Shop Manual" for detailed instructions.

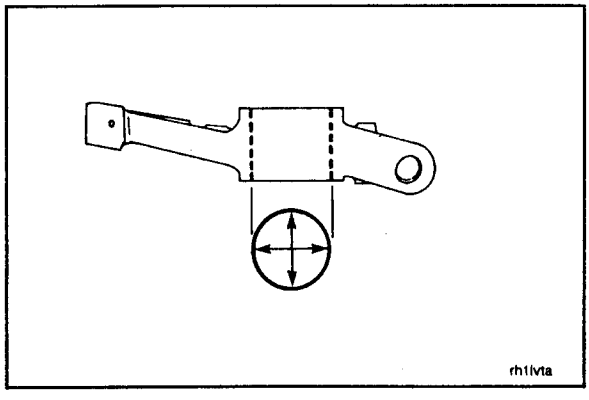

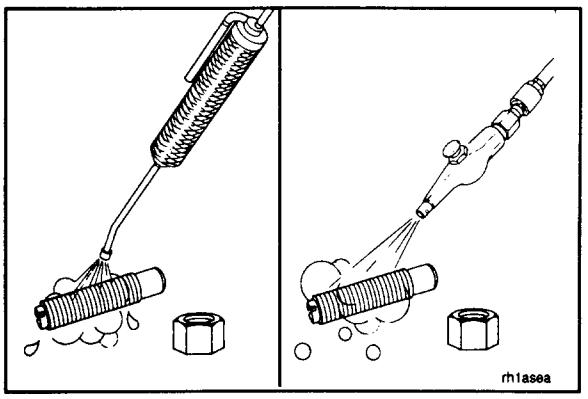

4. Use steam or solvent to clean the rocker lever adjusting screws and nuts.
5. Dry with compressed air.

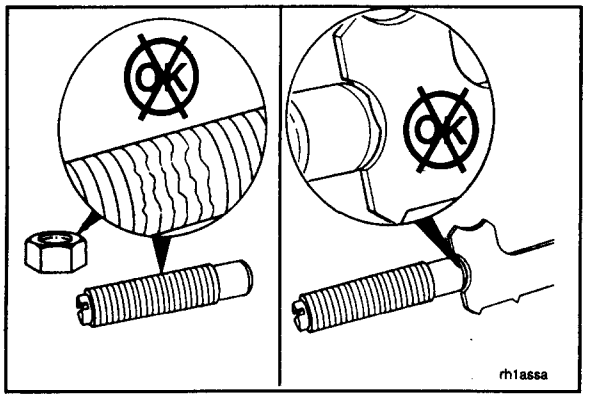

6. Visually inspect the adjusting screws and the nuts for distorted threads.
7. Visually inspect the ball end of the adjusting screws for scratches or wear. Check with a 6.35 mm [0.25-inch] radius gauge.

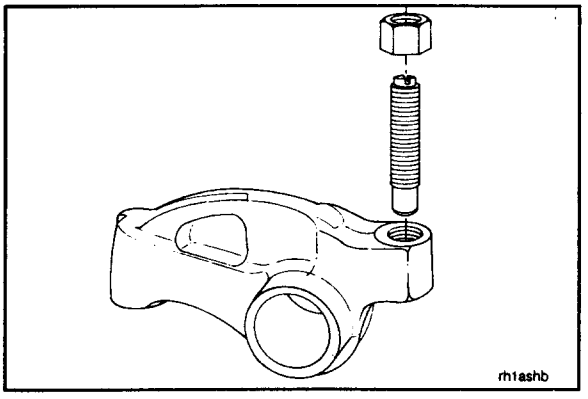

Assemble

1. Install the adjusting screw and lock nut in each rocker lever. Do **not** tighten the lock nuts.

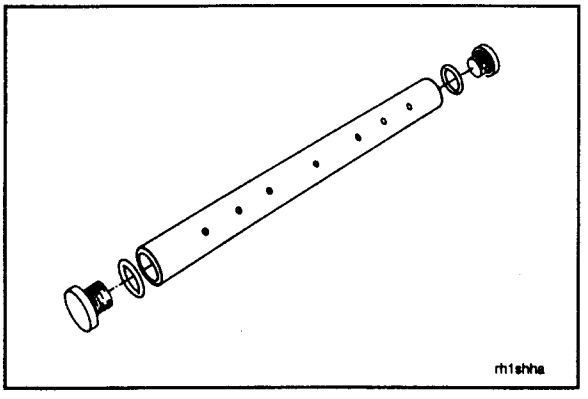

2. Install two plugs in each shaft.

NOTE: If the plugs are threaded, hold one plug with an allen wrench while tightening the other plug to 95 N•m [70 ft-lbs] torque.

Caution: The set screw hole (7) must be to the top and the seven oil passage holes (8) toward the flat side of the housing for correct assembly.

3. Install the exhaust (1), injector (2), and intake (3) rocker levers as the shaft is pushed through the housing.

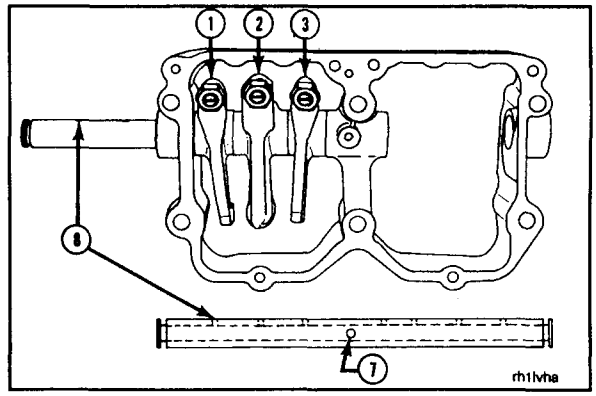

4. Install the intake (4), injector (5), and exhaust (6) rocker levers as the shaft continues through the housing.

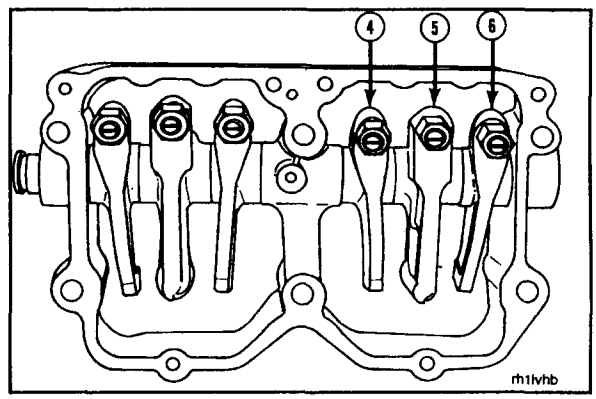

5. Install the O-rings as follows:
   a. Push the shaft until 12.7 mm [0.50-inch] extends from the housing.
   b. Install the lubricated O-ring.
   c. Push the shaft until the other end extends 12.7 mm [0.50-inch] from the housing.
   d. Install the lubricated O-ring.

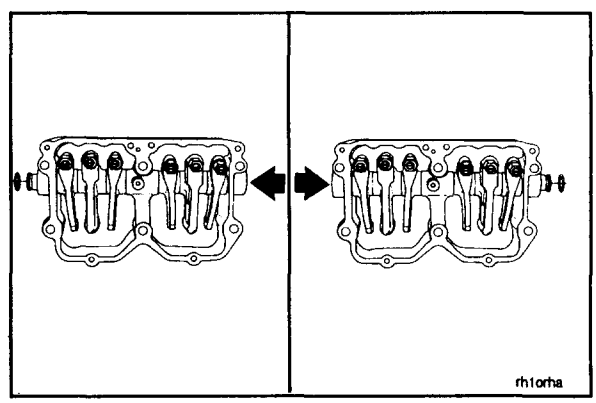

6. Align the shaft and the housing set screw holes.
7. Install the set screw.

NOTE: The 80-degree tilt engines use spray nozzles instead of set screws in the rocker lever housings. Spray nozzles **must** be aligned with the ST-1182 Valve Spring Spray Nozzle Locator.

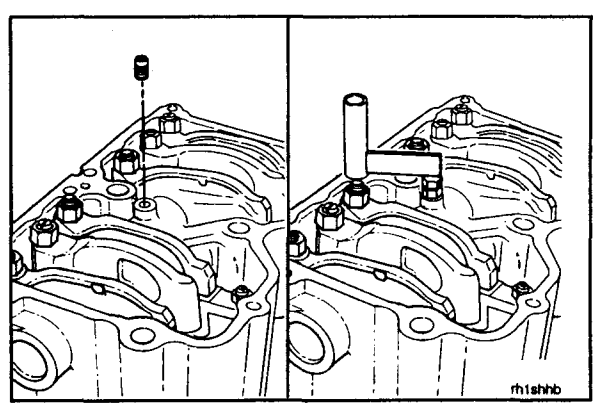

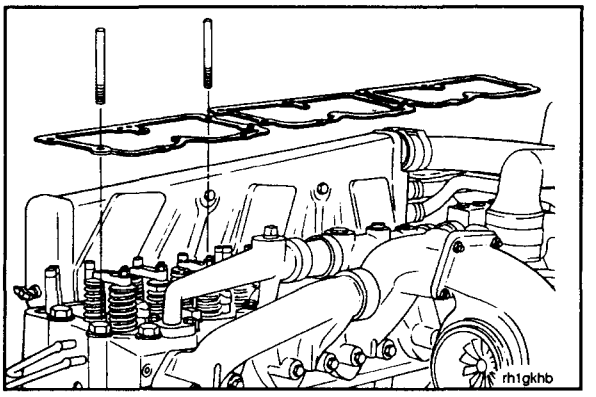

Install

1. Install new rocker lever housing gaskets on the cylinder heads.
2. Install two guide studs in each cylinder head.

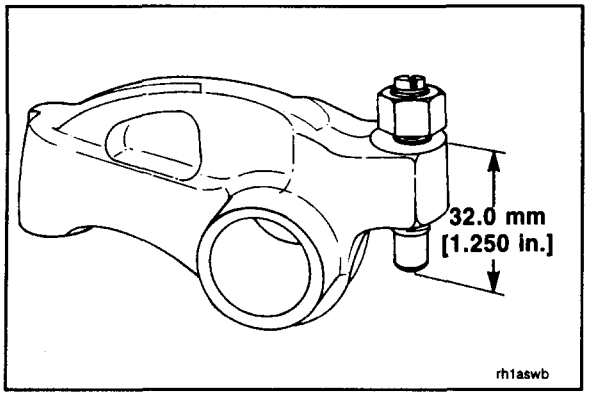

Caution: If the adjusting screws protrude beyond the maximum listed below, the push rods can be damaged when the housing capscrews are tightened.

3. Loosen the rocker lever adjusting screws so there is a maximum of 32 mm [1.250 inches] from the top surface of the lever and the ball end of the adjusting screw.

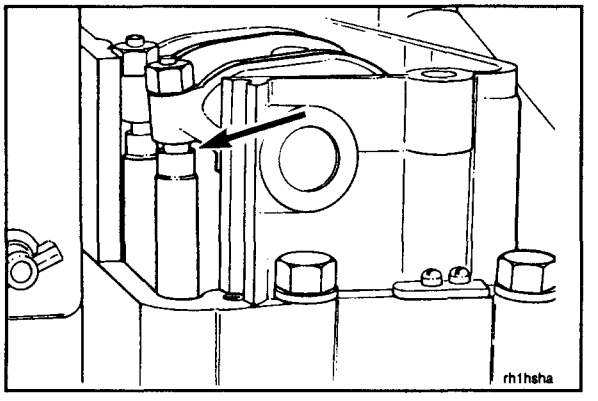

4. Install the rocker lever housings as follows:
   a. Hold the rocker levers in position.
   b. Install the ball end of the adjusting screws in the push rod sockets.

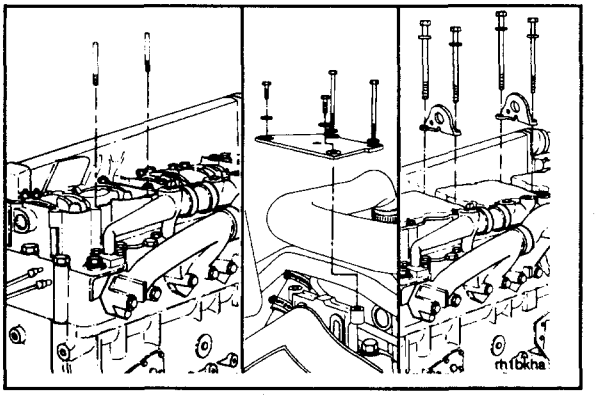

Caution: If the engine is equipped with a Jacobs® Brake, the special steel washers supplied by Jacobs® must be installed on the rocker housing studs to prevent damage to the rocker housing.

   c. Remove the guide studs.
   d. Install the capscrews.
   e. Install the engine lifting bracket and the fan bracket brace.

NOTE: The longer capscrews are used to secure the engine lifting brackets and the fan hub support bracket.

f. Tighten the capscrews in the sequence shown to 80 N•m [60 ft-lbs] torque.

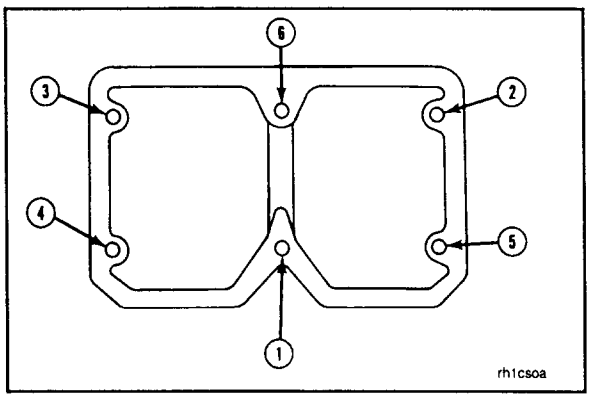

5. Adjust the valves and the injectors. Refer to Procedure 7-04.

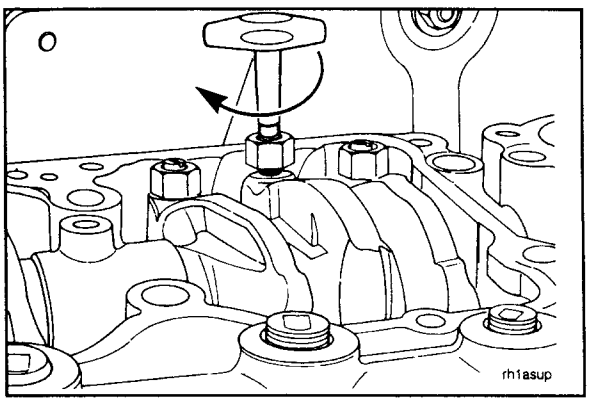

6. Install the rocker housing covers. Refer to Procedure 7-02.
7. Install the air crossover connection (Big Cam III only). Refer to Procedure 3-13.

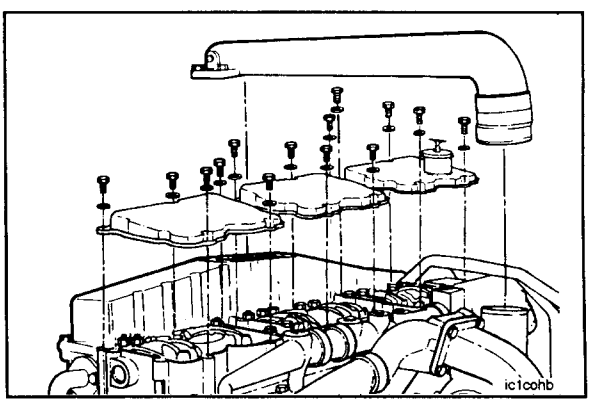

Cylinder Head Gasket(s) - Replace (7-10)

NOTE: If the cylinder head gasket(s) is being replaced because of coolant, lubricating oil, or compression leaks, use the following procedure:

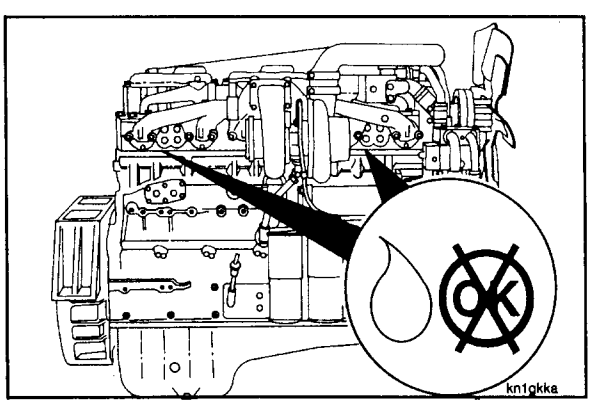

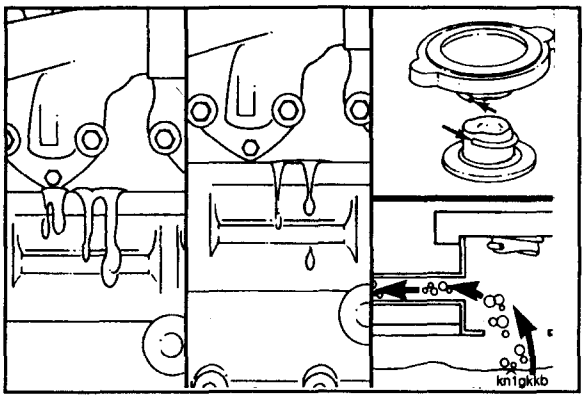

1. Define the type of leak as follows:
   a. Lubricating Oil
   b. Coolant
   c. Compression (refer to Procedure 1-11).

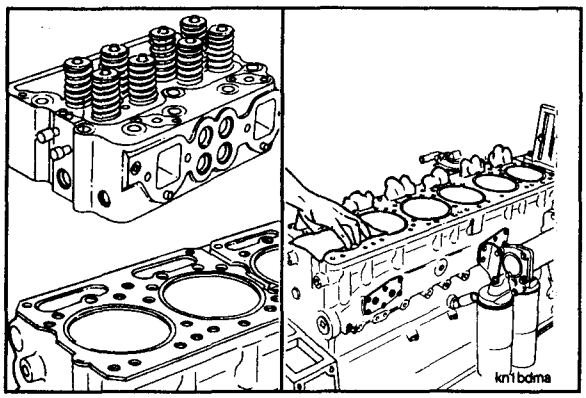

2. Remove the cylinder head(s). Refer to Procedure 7-11.
3. Clean and inspect the cylinder head and the cylinder block. Refer to Procedure 7-11.

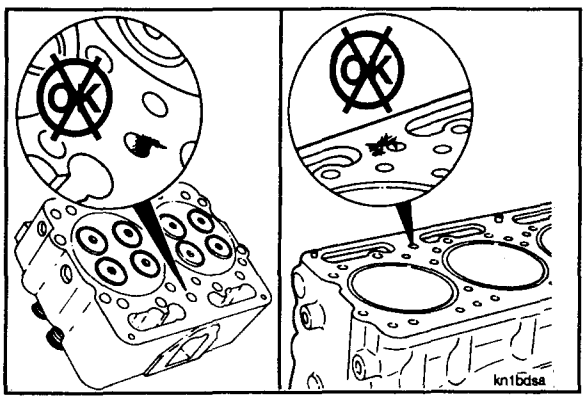

4. If there is a lubricating oil leak, do the following:
   a. Inspect the cylinder head(s) for surface damage.
   b. Inspect the cylinder block for surface damage.
   c. Repair the damaged surface. Refer to the "Alternative Repair Manual," Bulletin No. 3379035.

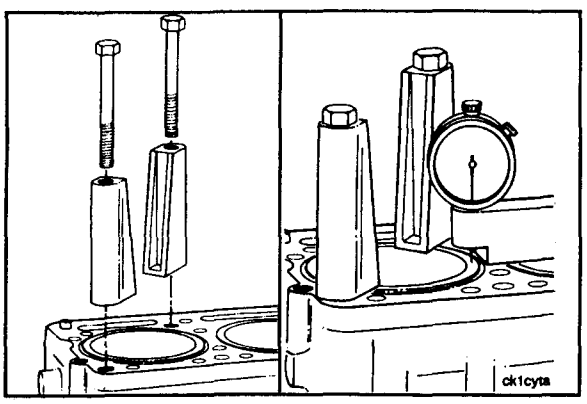

5. If there is a coolant leak, do the following:
   a. Install two Part No. 3376669 Cylinder Liner Clamps on each cylinder liner. Refer to Procedure 7-24.
   b. Measure and record the cylinder liner protrusion. Refer to Procedure 7-24.

c. Install a plug in the lower radiator hose.

d. Close the engine drain cock.

e. Close the oil cooler drain cock.

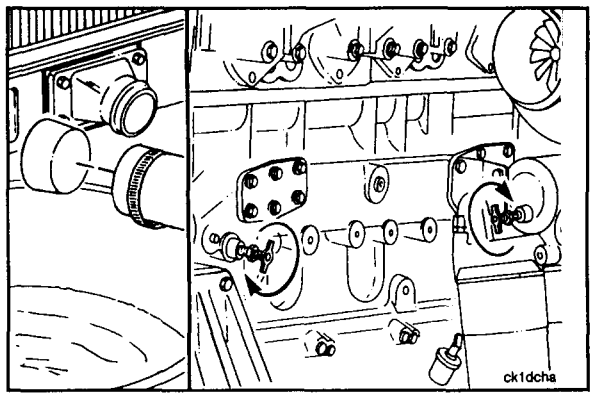

f. Remove the cab or the fuel heater coolant supply or the return hose from the cylinder block or water inlet connection.

g. Install a pipe plug in the cylinder block or the water inlet connection.

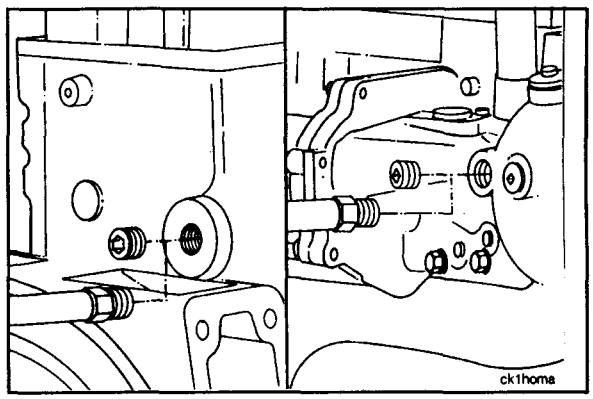

h. Install a plug in the aftercooler supply hose at the rear of the cylinder block (Big Cam III engines).

i. Install plugs in the aftercooler supply and return hoses at the thermostat housing (Big Cam IV engines).

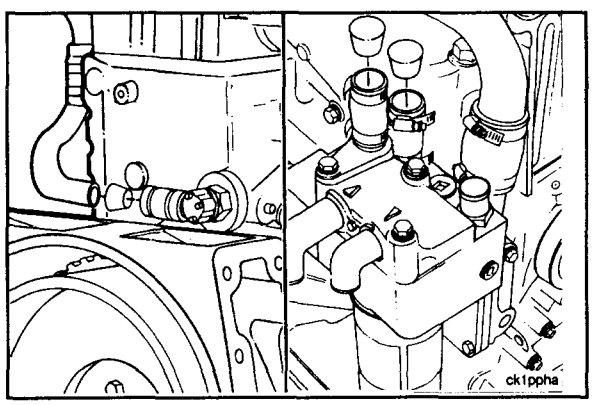

j. Install Part No. 3376298 Cylinder Block Deck Water Plugs. Eight water plugs are required for each cylinder head removed.

NOTE: One of the front coolant passages in the cylinder block **must** remain open to allow venting as the cylinder block cooling system is being filled with coolant.

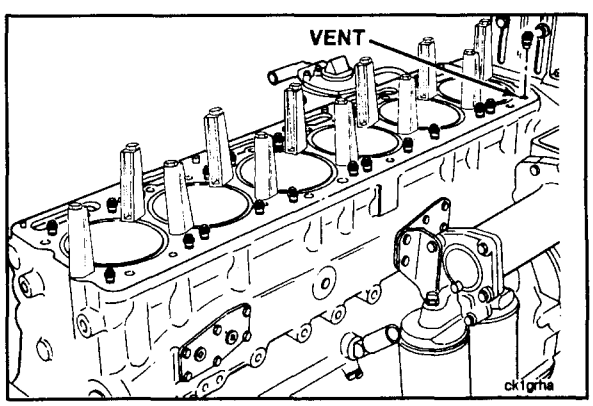

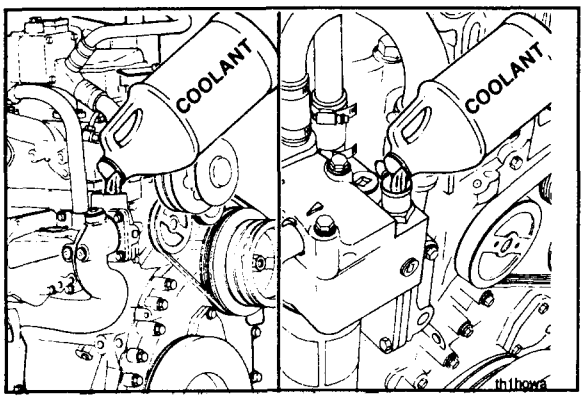

6. Fill the cylinder block with coolant at the following locations:
   a. Coolant bypass hose (Big Cam III engines).
   b. Engine fill line (Big Cam IV engines).

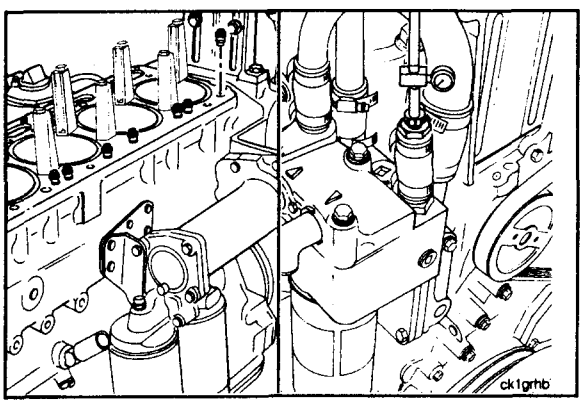

7. Install the remaining cylinder block water plug.

NOTE: Use shop air, a pressure regulator, and an adapter fabricated into a pipe plug or hose plug to apply air pressure to the cylinder block.

8. Install a plug with a shop air attachment in the bypass or coolant fill hose.

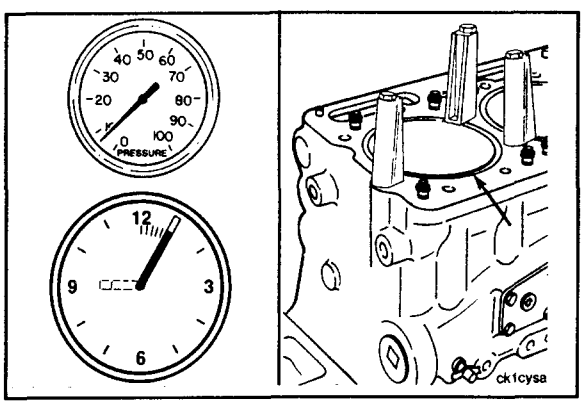

9. Apply 35 to 70 kPa [5 to 10 psi] air pressure to the cylinder block cooling system for 3 to 5 minutes.
10. Visually inspect between the cylinder liner flange and the cylinder block for coolant leakage.

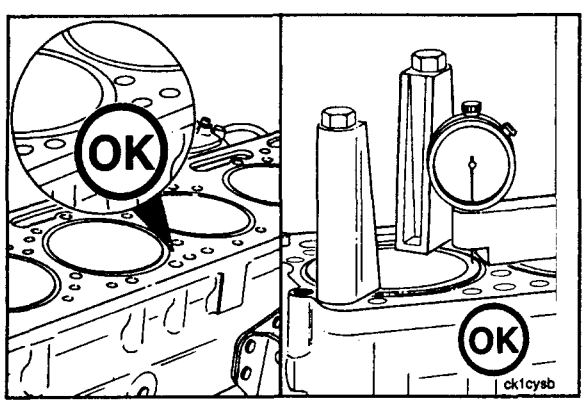

11. If no leakage is observed and the cylinder liner protrusion is within specifications, remove the cooling system plugs and the shop air.
12. Install a new head gasket(s), and replace the cylinder head(s). Refer to Procedure 7-11.

13. If leakage is observed between the cylinder liner flange and the cylinder block, proceed as follows:

    a. Remove the cooling system plugs and the shop air.

    b. Remove the cylinder liner clamps.

    c. Open the engine and the oil cooler drain cocks to drain the cylinder block.

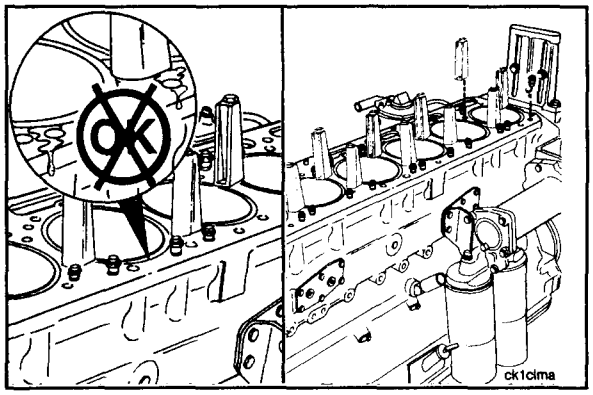

    d. Remove the cylinder liner or liners where leakage was observed. Refer to Procedure 7-24.

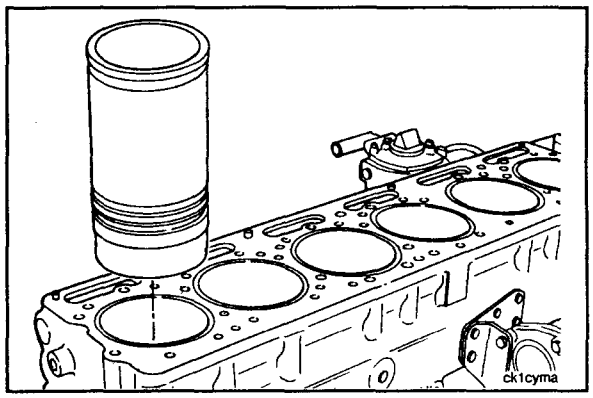

    e. Inspect the cylinder liner's upper counterbore. Remove all burrs, dirt, and foreign material. Refer to Procedure 7-24.

    f. If the cylinder liner protrusion is **not** within specifications, the counterbore **must** be resurfaced and liner shims installed to the correct liner protrusion. Refer to Procedure 7-24.

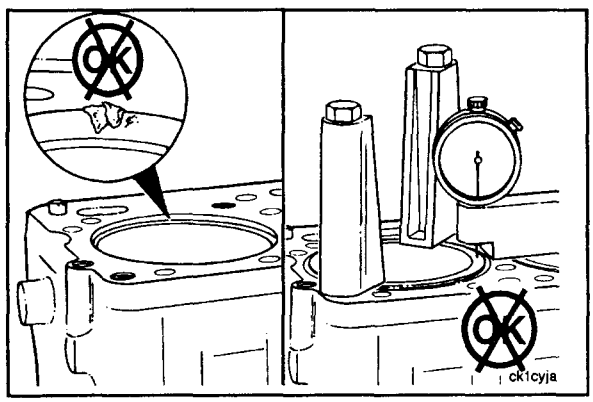

    g. Install the cylinder liner(s). Refer to Procedure 7-24.

14. Install the new cylinder head gasket(s). Refer to Procedure 7-10.

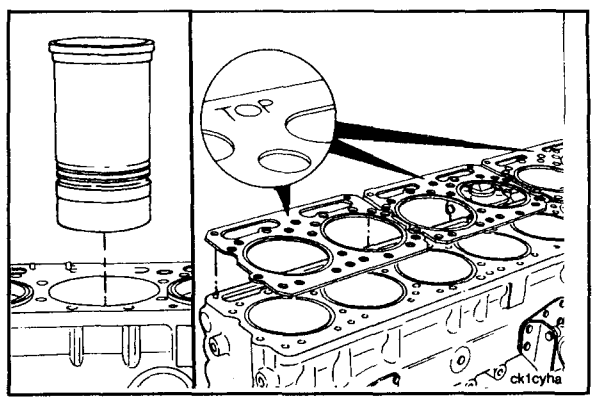

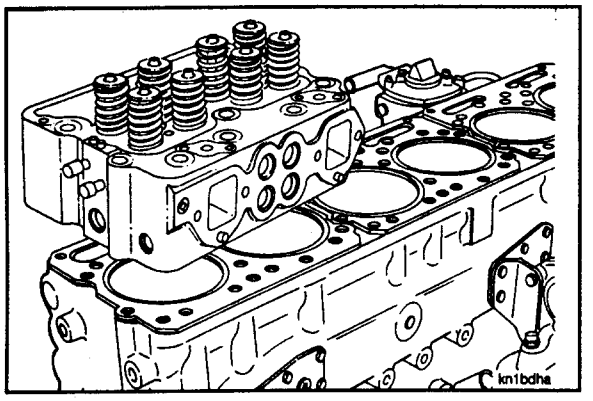

15. Install the cylinder head(s). Refer to Procedure 7-11.

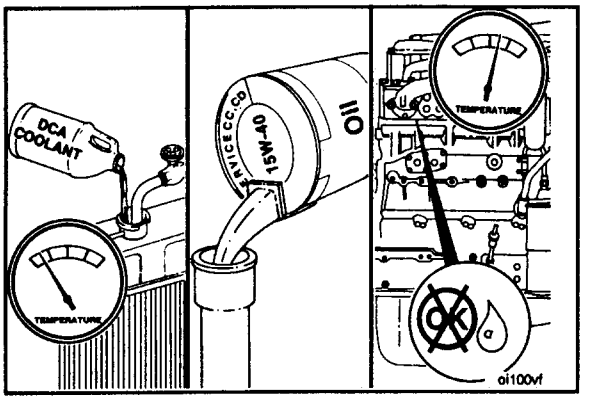

16. Fill the cooling system. Refer to Procedure 1-07.
17. Fill the engine with clean 15W-40 lubricating oil if the cylinder liners were removed. Refer to Procedure 2-10.
18. Operate the engine until the coolant temperature is above 80°C [180°F], and check for leaks.

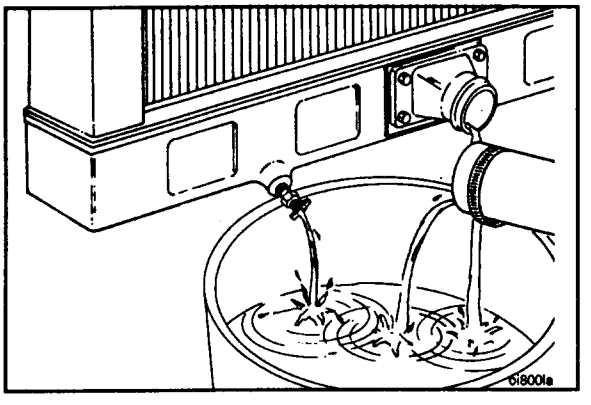

Cylinder Heads - Replace (7-11)

Remove

1. Drain the cooling system. Refer to Procedure 1-06.

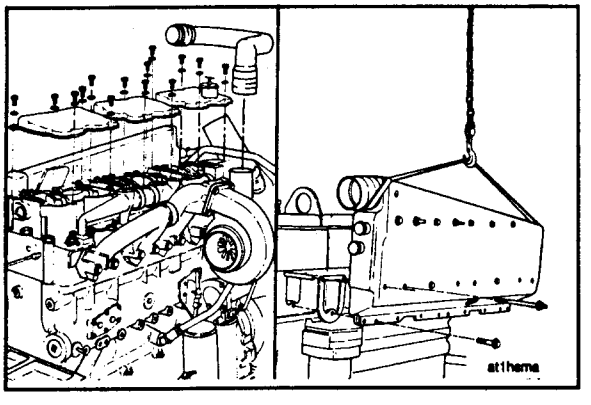

2. Remove the air crossover connection or tube. Refer to Procedure 3-13.
3. Remove the rocker housing covers. Refer to Procedure 7-02.
4. Remove the aftercooler assembly. Refer to Procedure 3-16.

5. Remove the turbocharger. Refer to Procedure 3-13.
6. Remove the exhaust manifold. Refer to Procedure 3-15.

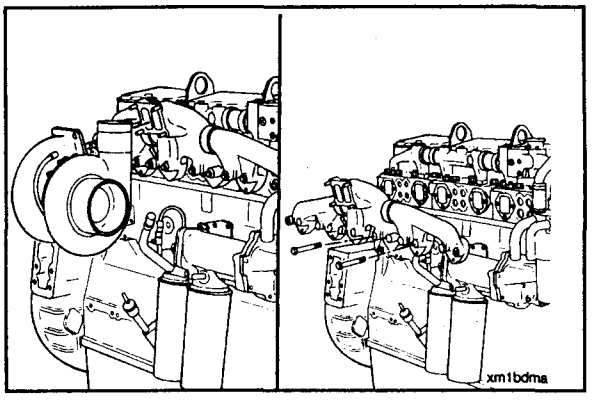

7. Remove the water manifold. Refer to Procedure 1-43.

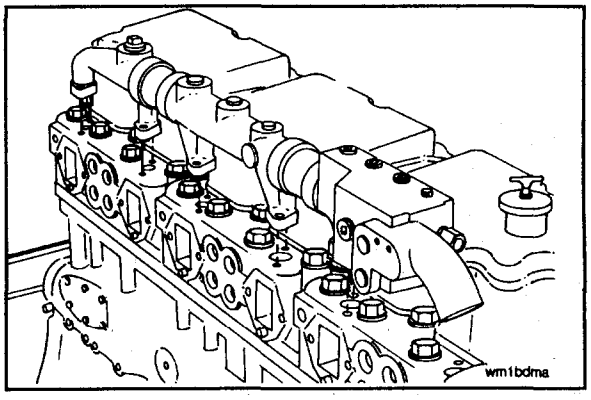

8. Remove the rocker lever housings. Refer to Procedure 7-09.
9. Remove the push rods. Refer to Procedure 7-08.

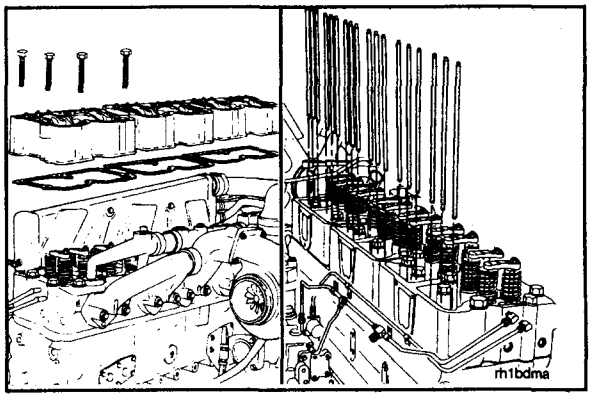

10. Remove the valve crossheads.
11. Remove the fuel supply and the fuel drain tubes.
12. Remove all the necessary brackets and clamps.

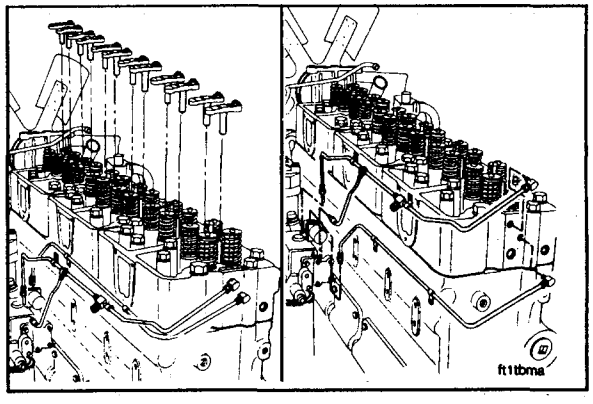

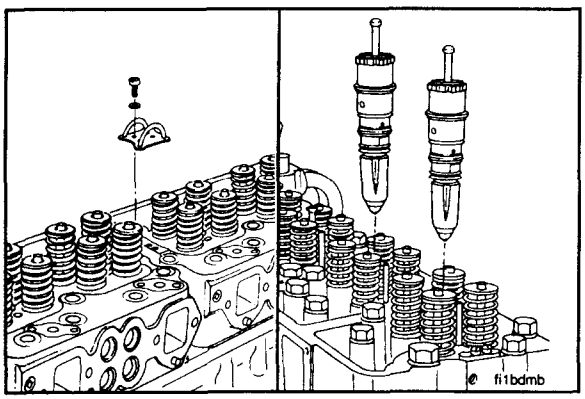

13. Remove the two fuel crossover connections and the O-rings.
14. Remove the injectors. Refer to Procedure 5-06.

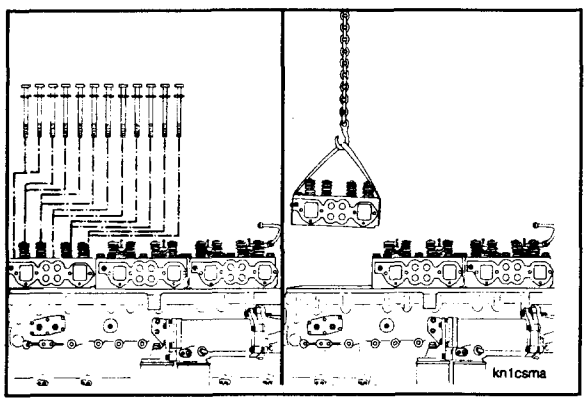

15. Remove the 12 capscrews and washers from each cylinder head.

Warning: Because this part weighs more than 23 kg [50 lbs], two people or a hoist will be required to lift the cylinder heads to avoid personal injury.

16. Lift the cylinder heads from the block, and remove the cylinder head gaskets.

NOTE: To prevent increased wear, mark each cylinder head as it is removed so it can be installed back in its original location.

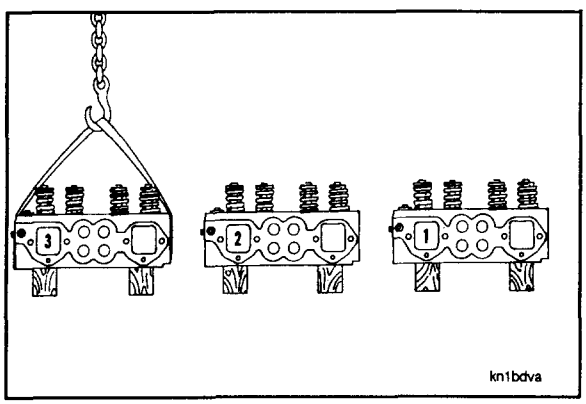

Caution: To prevent damage to the head gasket surface, put the cylinder heads on wooden blocks when they are removed.

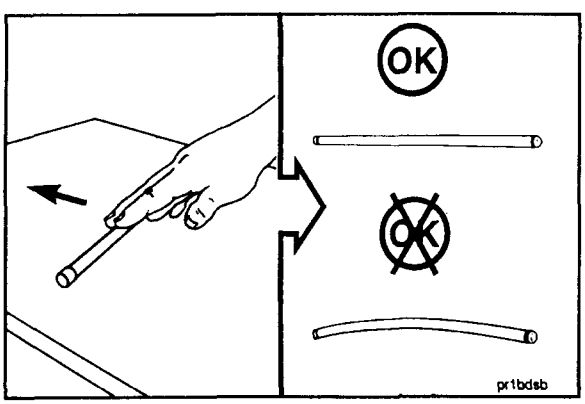

Clean and Inspect

Cylinder Block, Cylinder Head, and Push Tubes

1. Inspect the push rods. Refer to Procedure 7-08.

2. Put a clean, lint-free rag in each push rod cavity in the cylinder block.
3. Use a gasket scraper to remove heavy dirt and debris from the head gasket surface of the cylinder block.

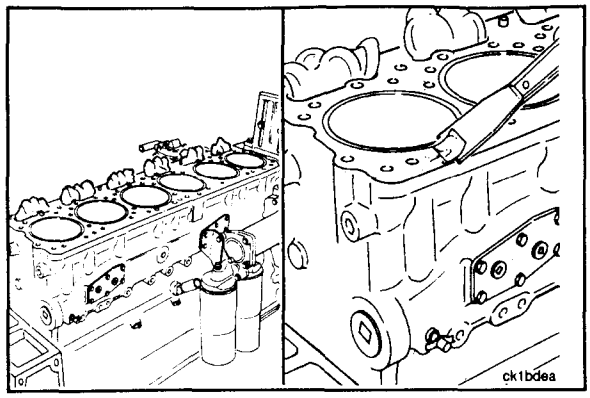

4. Use a razor blade scraper and solvent to remove any remaining material from the cylinder block surface.

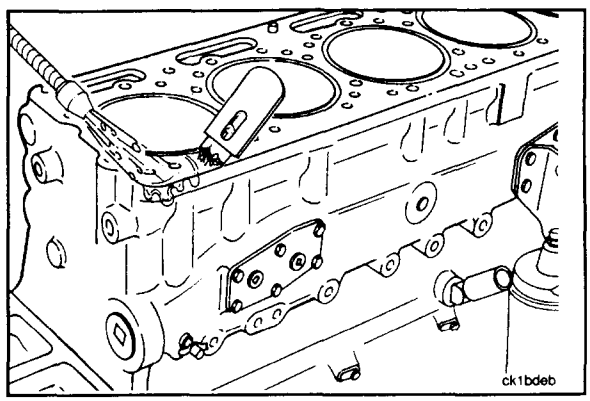

5. Clean with solvent, and dry with compressed air.

NOTE: Remove the rags after the cylinder block is cleaned.

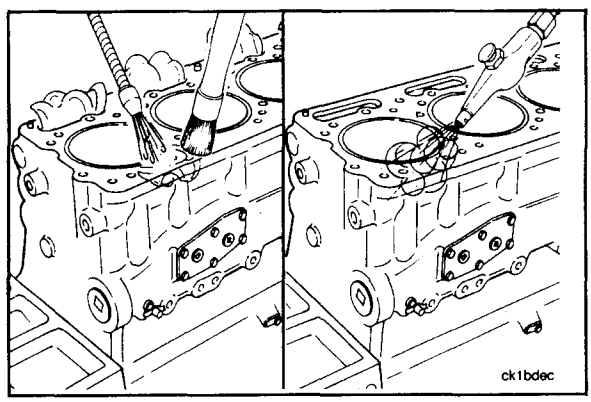

6. Steam clean the cylinder heads, and dry with compressed air.
7. Blow out all capscrew holes, fuel passages, and oil passages.

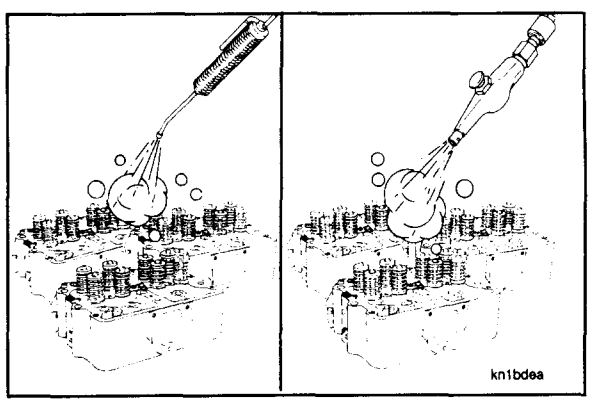

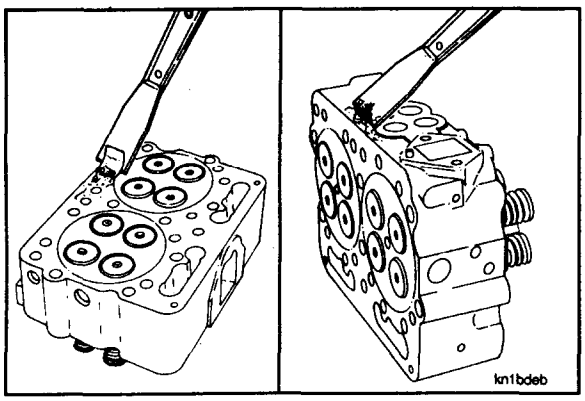

8. Use a gasket scraper to remove heavy dirt and debris from the cylinder head gasket surface and the exhaust manifold gasket surface.

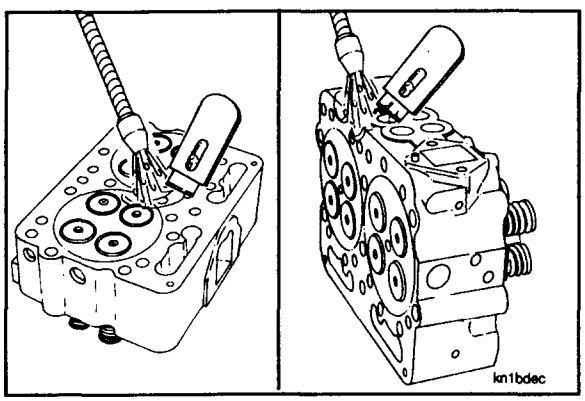

9. Use a razor blade scraper and solvent to remove any remaining material from the cylinder head gasket surface and the exhaust manifold gasket surface.

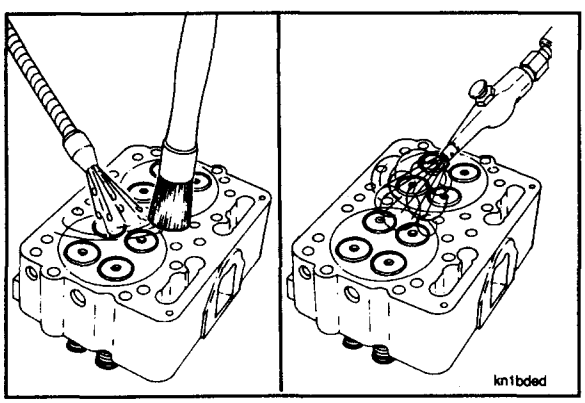

10. Clean with solvent, and dry with compressed air.

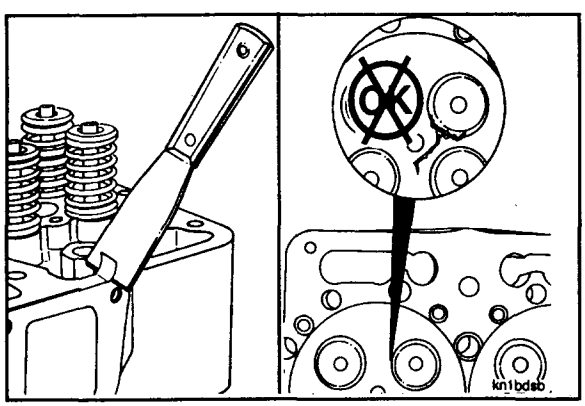

11. Clean the rocker housing gasket surface on each cylinder head.
12. Visually inspect the cylinder heads for cracks or damage.

NOTE: If a crack in a cylinder head is suspected, pressure test the cylinder head. Refer to Procedure 7-12.

13. Visually inspect the valves for indications of leakage or burning. If indications of leakage or burning are found, the valves and the seats **must** be resurfaced. Refer to the "NT Engine Shop Manual."

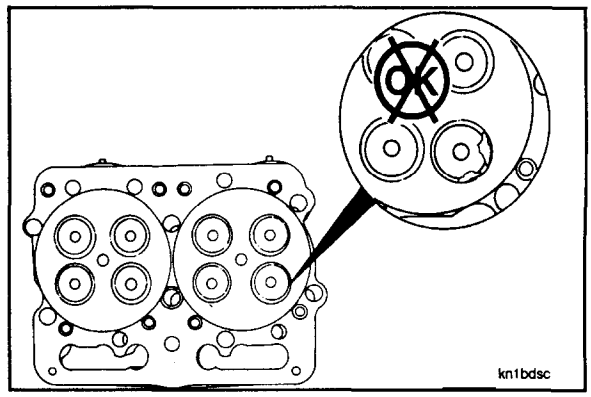

Cylinder Head Capscrews

Caution: Do not use caustic or acid solutions to clean the cylinder head capscrews.

1. Use a petroleum-based solvent to clean the capscrews.
2. Clean the capscrews thoroughly with a wire brush with a wire wheel (soft), or use a non-abrasive bead blast to remove deposits from the shank and the threads.

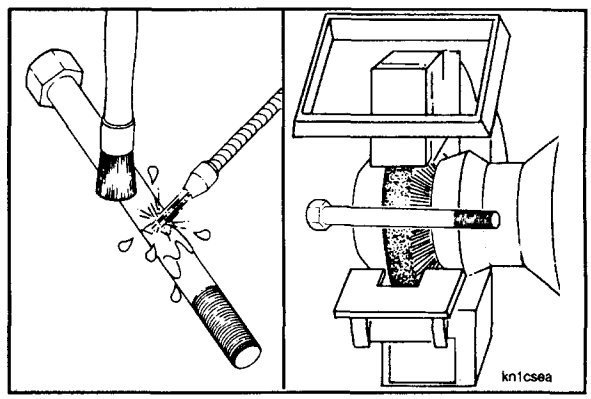

3. Visually inspect the cylinder head capscrews for damaged threads, corroded surfaces, or a reduced diameter (due to capscrew stretching).

NOTE: Do **not** reuse a capscrew that has damaged threads or a reduced diameter from having been stretched.

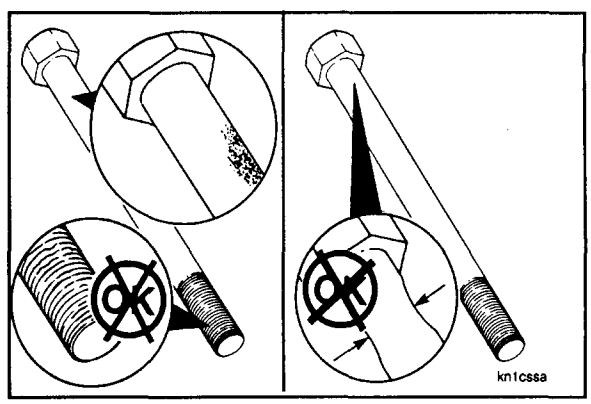

4. Do **not** reuse cylinder head capscrews under the following conditions:
   a. Visible corrosion or pitting exceeds 1 sqcm [0.155 sq. inch] in area. Example:
      - Acceptable 3/8- x 3/8-inch
      - Unacceptable 1/2- x 1/2-inch
   b. Visible corrosion or pitting exceeds 0.12 mm [0.005-inch] in depth.

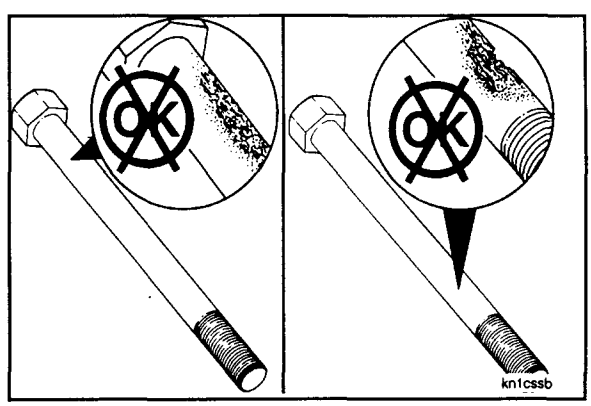

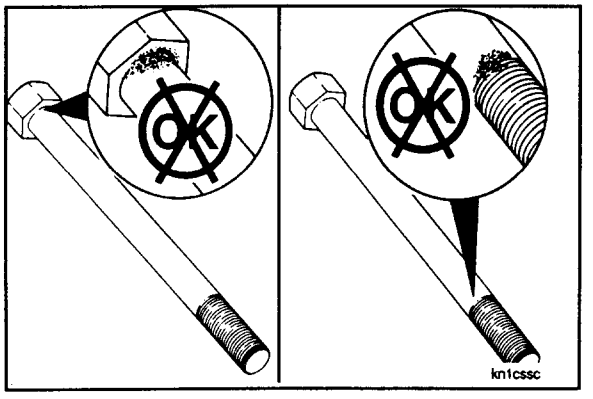

c. Visible corrosion or pitting is located within 3.2 mm [1/8-inch] of the fillet.

d. Visible corrosion or pitting is located within 3.2 mm [1/8-inch] of the threads.

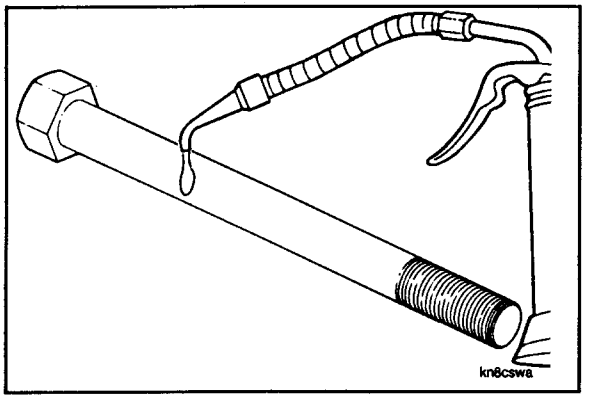

5. Immediately after cleaning and inspecting, apply a film of clean engine lubricating oil to capscrews that are to be used again.

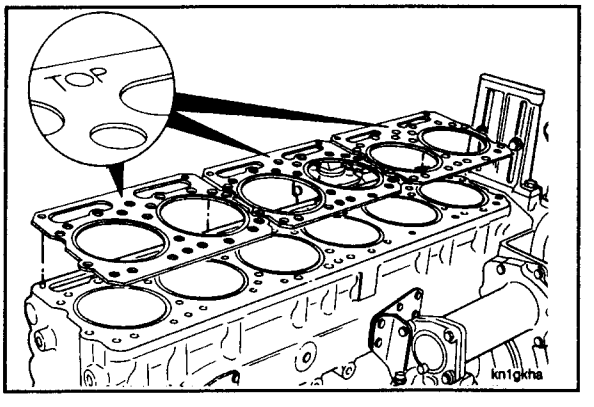

Install

1. Install new gaskets on the dowel pins in the cylinder block.

NOTE: Make sure the side of the gasket marked "TOP" is up.

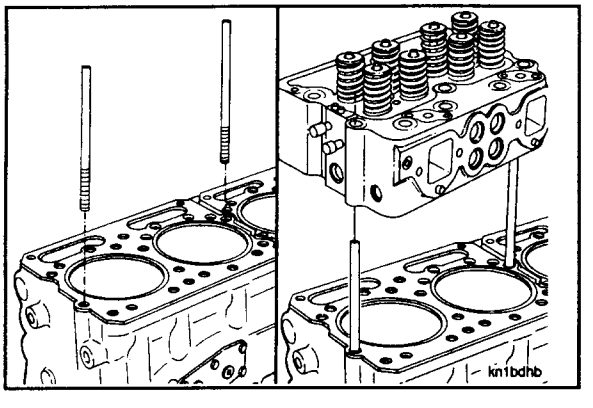

2. Install two guide studs in the block for each cylinder head.
3. Install the cylinder heads over the guide studs and the dowel pins.
4. Remove the guide studs.

5. Use clean 15W-40 oil to lubricate the cylinder head capscrews and both sides of the flat washers.
6. Allow the excess oil to drain from the threads.
7. Install 12 capscrews and washers in each cylinder head.

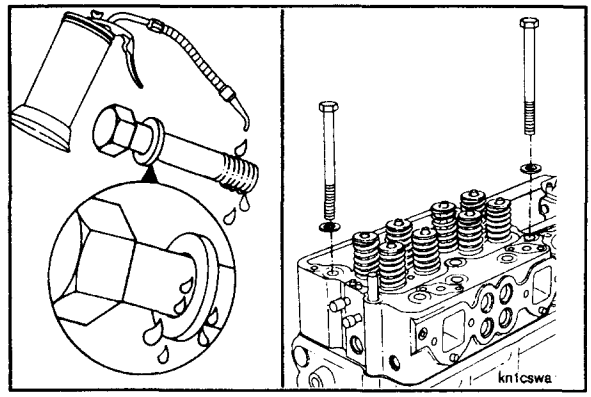

8. Complete the following steps to tighten the capscrews to the specified torque values in the sequence shown:
   a. Tighten to 35 N•m [25 ft-lbs].
   b. Tighten to 135 N•m [100 ft-lbs].
   c. Tighten to 385 N•m [285 ft-lbs].

   Repeat steps a, b, and c to install each cylinder head.

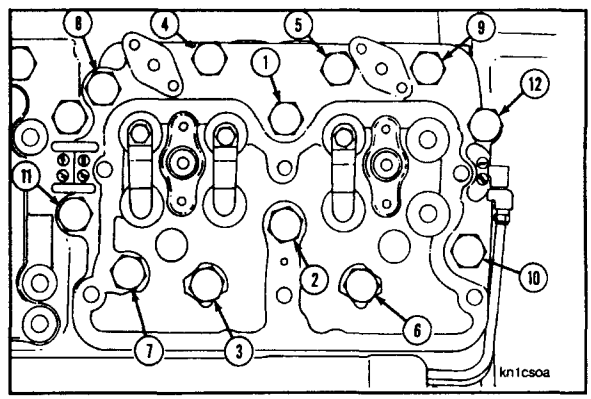

9. Install the injectors. Refer to Procedure 5-06.
10. Use new O-rings, and install the two fuel crossover connections. Tighten the capscrews to 4 N•m [35 in-lbs] torque.

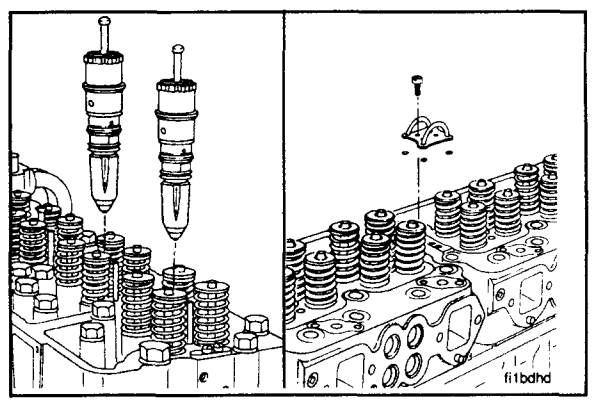

11. Install the fuel supply and the fuel drain tubes.
12. Install all the brackets and the clamps.
13. Install the valve crossheads as follows:
    a. Lubricate the valve stems and the crosshead guides with clean 15W-40 oil.

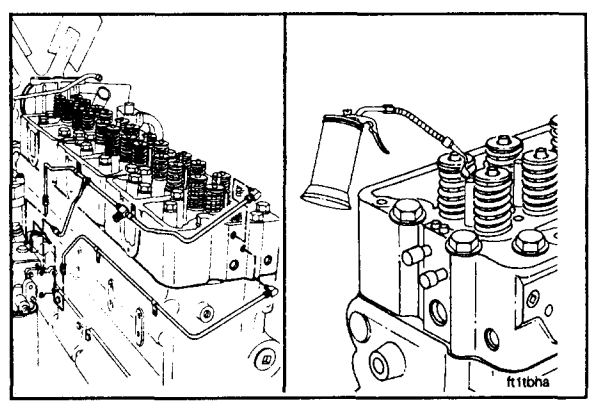

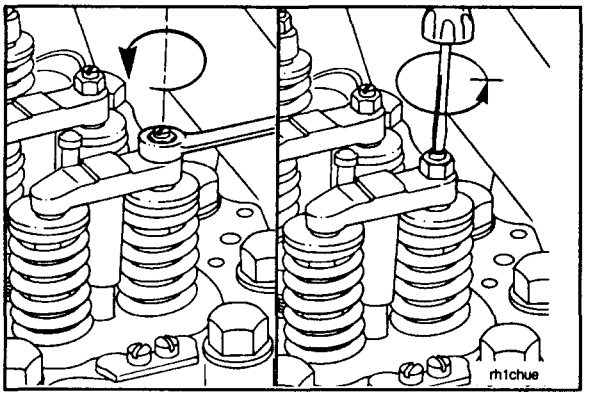

b. Install the crossheads on the crosshead guides with the adjusting screw toward the water manifold side of the engine.

NOTE: Engines with compression brakes use special crossheads on the exhaust valves.

c. Loosen the adjusting screw lock nut. Loosen the adjusting screw one full turn.

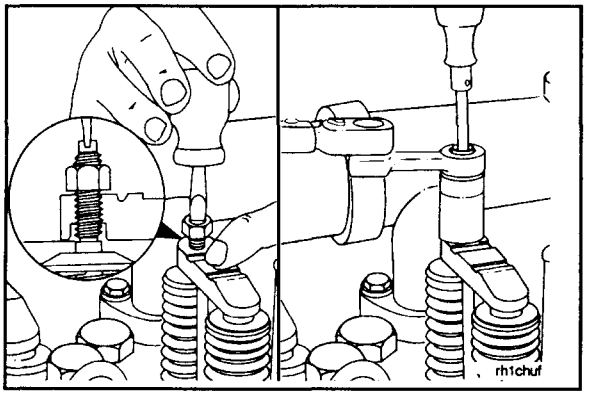

d. Use light finger pressure to hold the crosshead in position, and tighten the adjusting screw until it touches the top of the valve stem.

e. Hold the crosshead adjusting screw in position, and tighten the lock nut to 40 **N•m** [30 ft-lbs] torque.

NOTE: When ST-669 Torque Wrench Adapter is used, tighten the lock nut to 35 N•m [25 ft-lbs] torque.

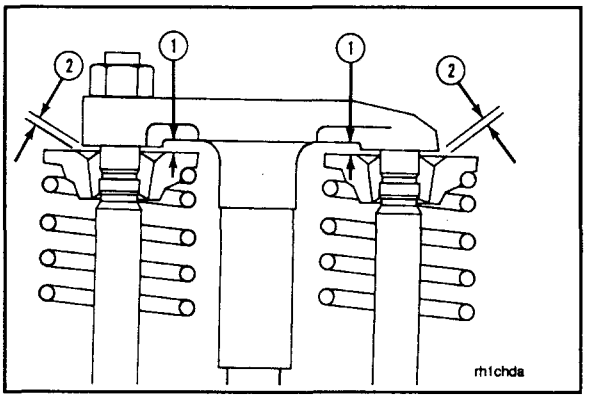

f. Use a wire gauge to check the clearance (1 and 2) between the crosshead and the valve spring retainer. The clearance **must** be a minimum of 0.65 mm [0.025-inch].

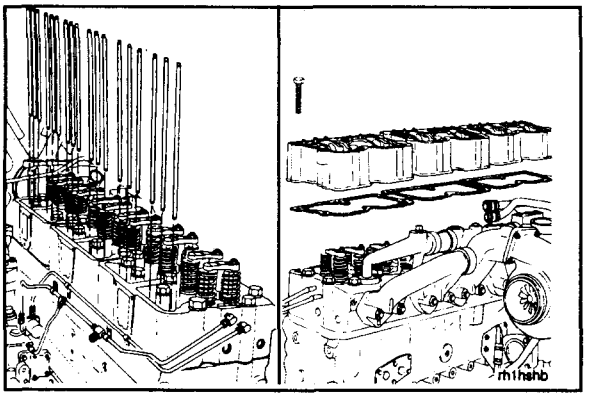

14. Install the push rods. Refer to Procedure 7-08.

NOTE: The injector push rods are larger in diameter than the valve push rods.

15. Install the rocker lever housings. Refer to Procedure 7-09.

16. Adjust the valves and the injectors. Refer to Procedure 7-04.

17. Install the water manifold. Refer to Procedure 1-43.
18. Install the exhaust manifold. Refer to Procedure 3-15.

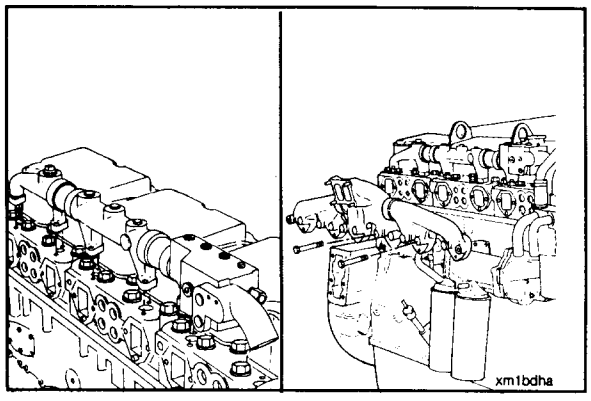

19. Install the turbocharger. Refer to Procedure 3-13.
20. Install the aftercooler assembly. Refer to Procedure 3-16.

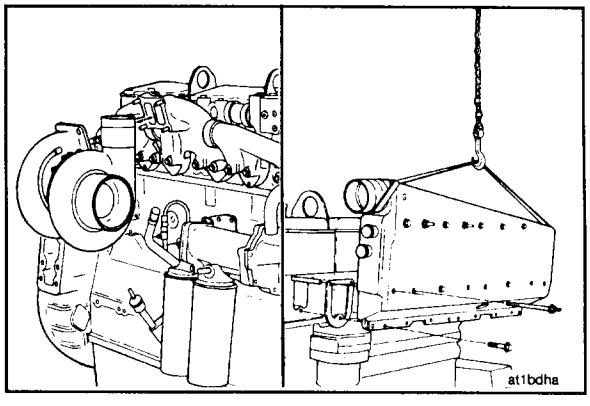

21. Install the rocker housing covers. Refer to Procedure 7-02.
22. Install the air crossover connection or tube. Refer to Procedure 3-13.

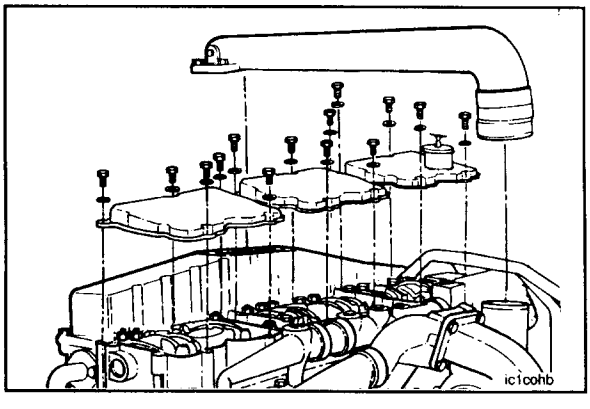

23. Fill the cooling system. Refer to Procedure 1-07.
24. Operate the engine until it reaches a temperature of 80°C [180°F], and check for leaks.

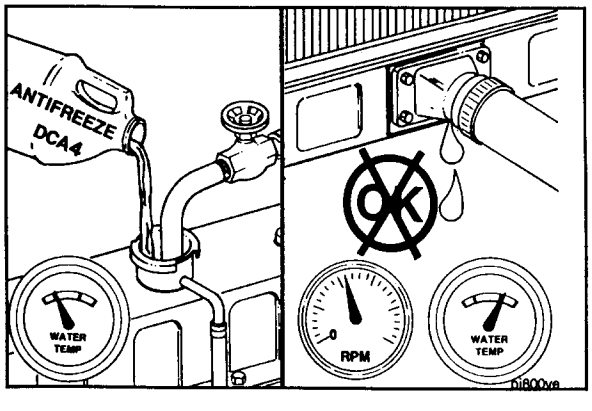

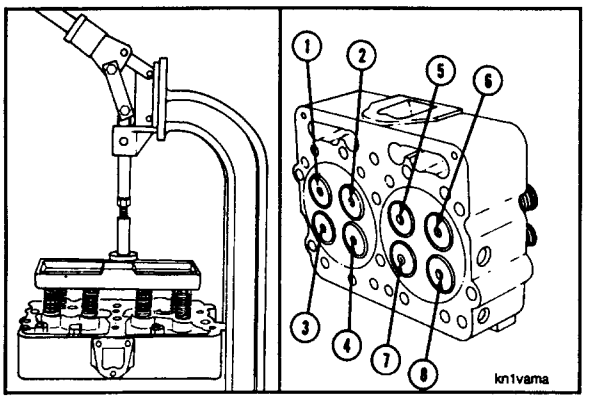

Cylinder Head - Pressure Test (7-12)

1. Remove the valves and the valve springs as follows:
   a. Use Part No. ST-1022 Valve Spring Compressor Stand and Part No. ST-1026 Valve Spring Compressor Plate.
   b. Mark each valve as it is removed to identify its location in the cylinder head.

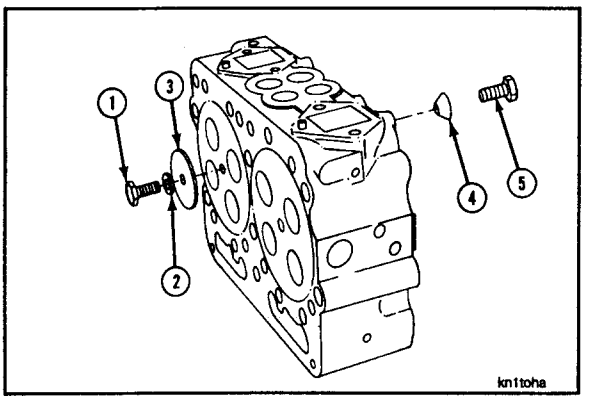

2. Install two Part No. ST-1179 Injector Sleeve Holding Tools in each cylinder head.

ST-1179 Injector Sleeve Holding Tool Description
(1) Hex Head Capscrew (1)
(2) Flat Washer (1)
(3) ST-1179-4 Anvil (1)
(4) ST-1179-2 Mandrel (1)
(5) Hex Head Capscrew (1)

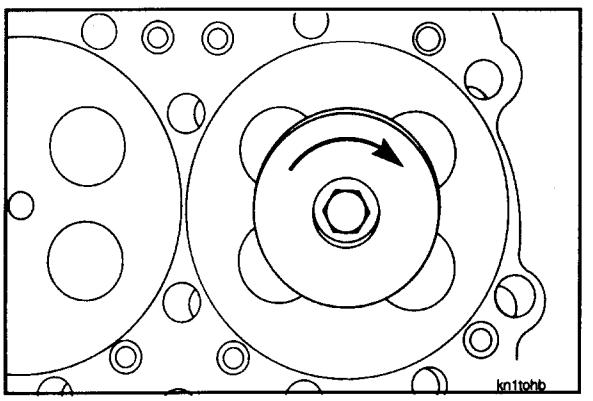

3. Tighten the injector sleeve holding tool capscrews to the following torque values:
   a. Tighten to 5 N•m [45 in-lbs].
   b. Tighten to 10 N•m [90 in-lbs].
   c. Tighten to 15 N•m [130 in-lbs].

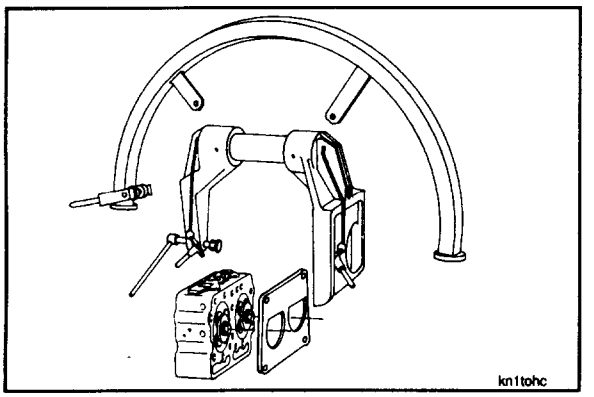

4. Install the cylinder head in Part No. ST-1012 Hydrostatic Tester and ST-1013 Hydrostatic Tester Adapter Plate.

5. Connect a regulated air supply hose to the test fixture plate.
6. Apply 280 kPa [40 psi] air pressure.
7. Use a hoist to place the cylinder head in a tank of warm water heated to 60°C [140°F].

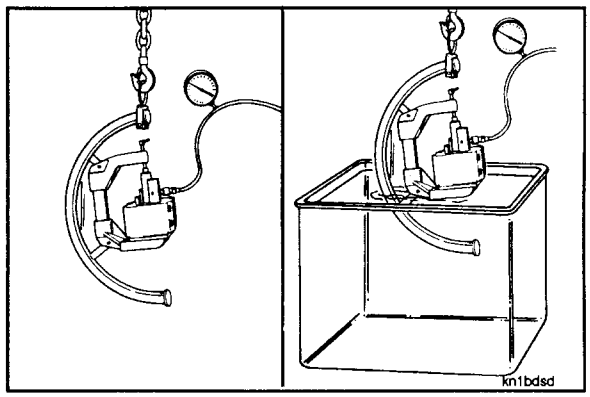

8. Completely submerge the cylinder head in the water.
9. Visually inspect for air bubbles rising from the water.
10. If air bubbles are seen, replace or rebuild the cylinder head. Refer to the "NT Engine Shop Manual" for rebuild procedures.

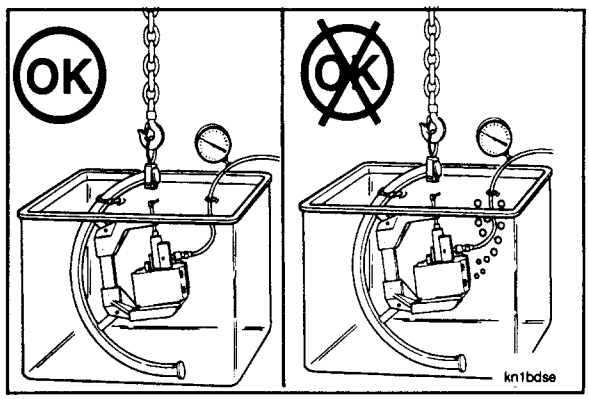

11. Remove the test equipment.

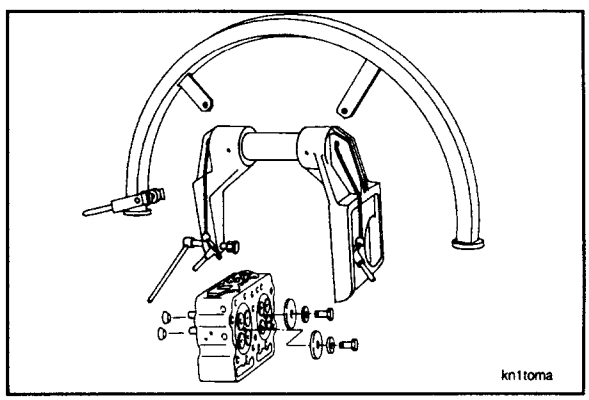

12. Install the valves in their original positions in the cylinder head and the valve springs in the cylinder head as follows:
    a. Valve
    b. Valve Spring Guide
    c. Valve Spring
    d. Valve Spring Retainer
    e. Collets
13. Install the cylinder head. Refer to Procedure 7-11.

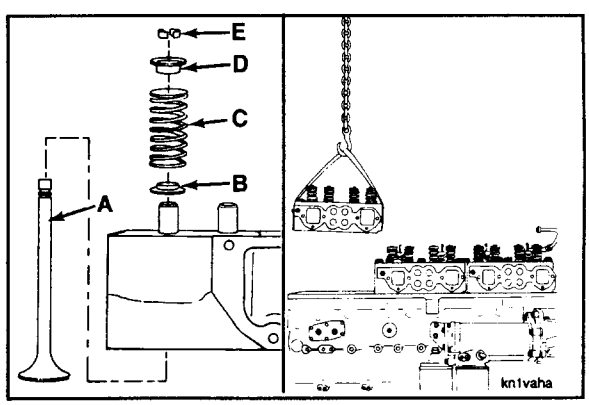

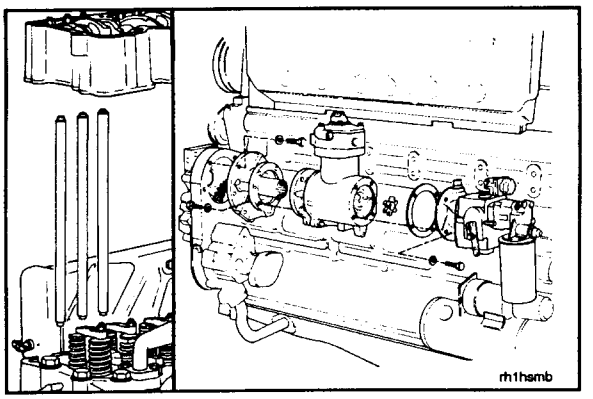

Cam Followers (Fixed Injection Timing) - Replace (7-13)

Remove

1. Remove the rocker lever housings. Refer to Procedure 7-09.
2. Remove the push rods. Refer to Procedure 7-08.
3. Remove the fuel pump. Refer to Procedure 5-07.
4. Remove the air compressor (if used). Refer to Procedure 4-12.
5. Remove the accessory drive assembly. Refer to Procedure 7-28.

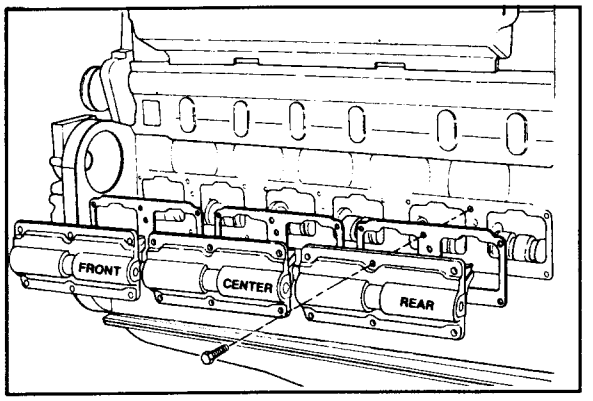

6. Remove the cam follower housing assemblies as follows:
   a. Remove the six capscrews from each cam follower housing.
   b. Remove the cam follower housings and gaskets.

NOTE: To prevent increased wear, mark the cam follower housing assemblies as they are removed so they can be installed back in their original location on the block.

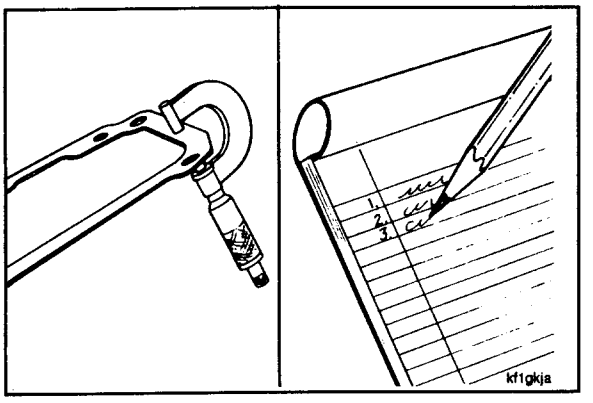

   c. Measure and record the thickness of the gaskets used between each cam follower housing and the block.

NOTE: The thickness of the gaskets controls the injection timing.

   d. Discard the gaskets.

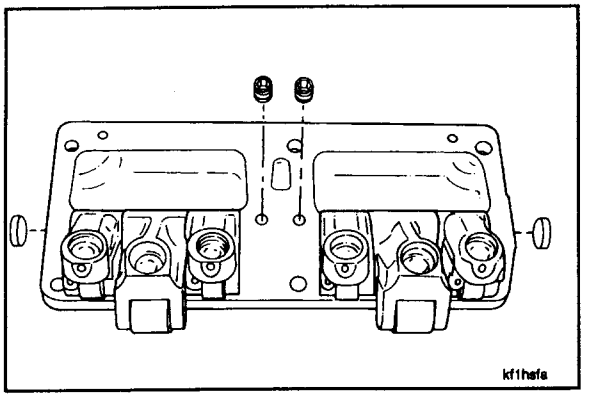

Disassemble

1. Remove the two locking screws.

NOTE: Each cam follower housing assembly consists of two shaft assemblies secured in a common center support with two locking screws.

2. Remove the two cup plugs from the housing.

3. Remove the shafts and the cam follower levers from the housings.

NOTE: To prevent increased wear, mark the cam follower shafts and the levers as they are removed so they can be installed back in their original positions in the housing.

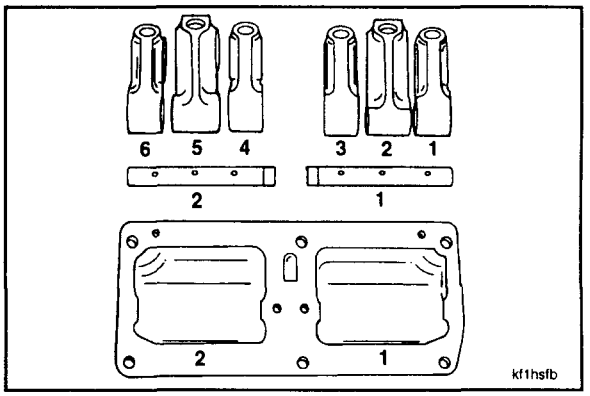

Clean and Inspect

1. Clean the cam follower parts with solvent, and dry with compressed air.

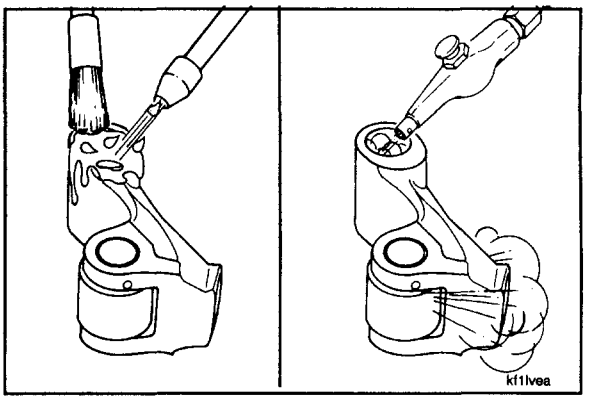

2. Visually inspect the cam follower housings for cracks or damage.
3. Visually inspect the locking screw holes for damaged or distorted threads.

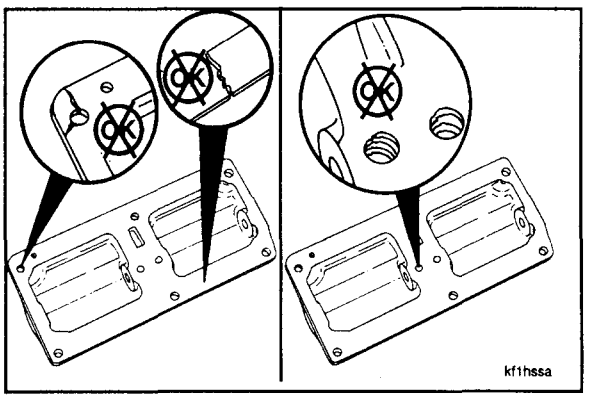

4. Visually inspect the cam follower shafts for scoring or damage.
5. Visually inspect the locking screw grooves in each shaft. The grooves **must** be clean and **not** damaged.

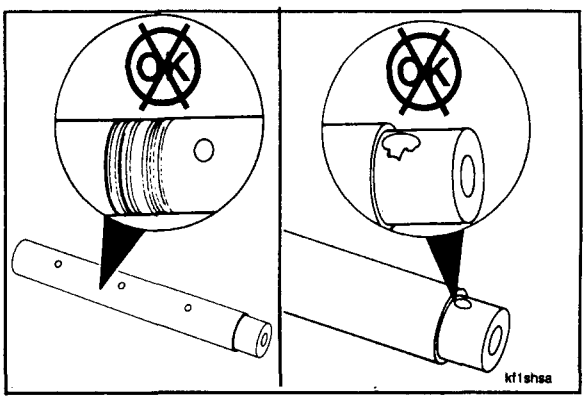

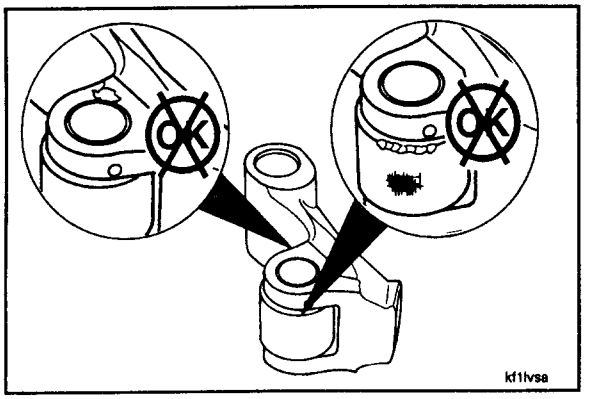

6. Visually inspect the cam followers for cracks or other damage.

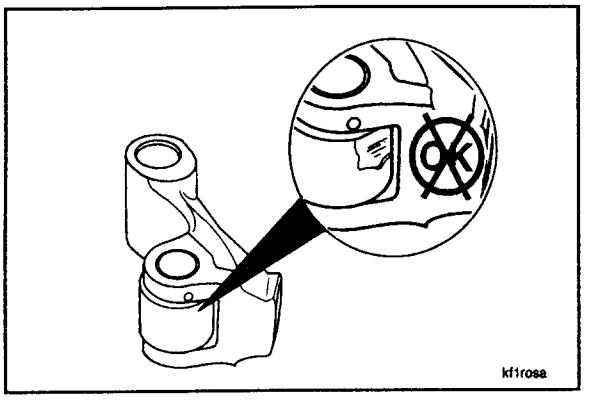

7. Visually inspect the rollers for flat spots, freedom of rotation, or other damage.

NOTE: Refer to the "NT Engine Shop Manual" for further repair or rebuild of the cam follower lever assemblies.

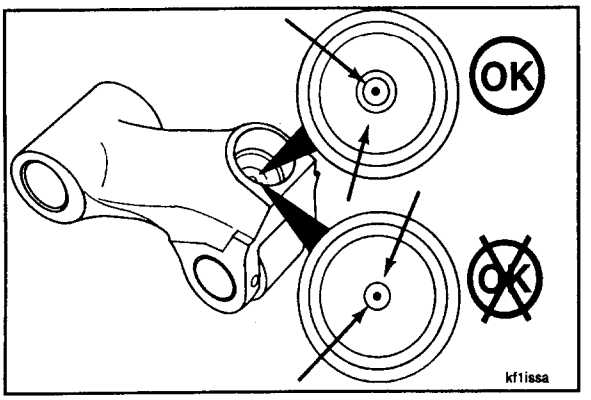

8. Visually inspect the sockets for excessive wear or damage.

NOTE: If excessive wear or damage is found in the sockets, refer to Procedure 7-08 to inspect the push rods. Do **not** use push rods with worn balls in cam followers with new sockets.

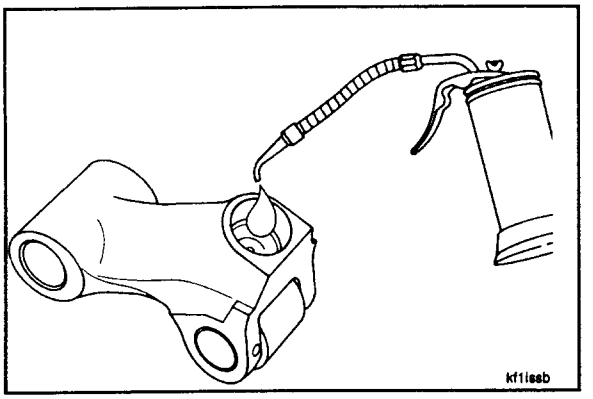

9. Use clean 15W-40 oil to check the oil flow through the cam followers.

Assemble

1. Use clean 15W-40 oil to lubricate the cam follower shafts and the lever bushings.

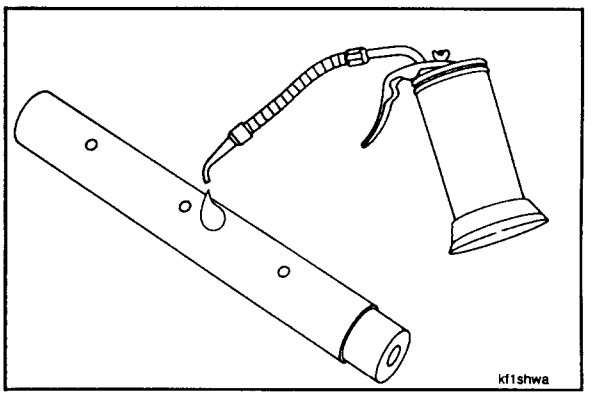

2. Install the levers and the shafts in the housings.

NOTE: To prevent increased wear, mark the cam follower shafts and the levers as they are removed so they can be installed back in their original location in the housing.

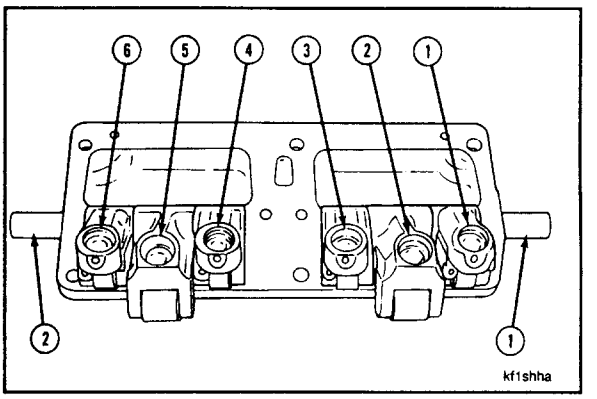

3. Install the cup plugs in the housings as follows:
   a. Install two temporary capscrews in the shafts to prevent breaking the locking screws.
   b. Put sealant in the cup plug holes.
   c. Use Part No. ST-1053 Expansion Plug Driver (1) to install the cup plugs.
   d. Remove the temporary screws.
   e. Install the two locking screws in the shafts.

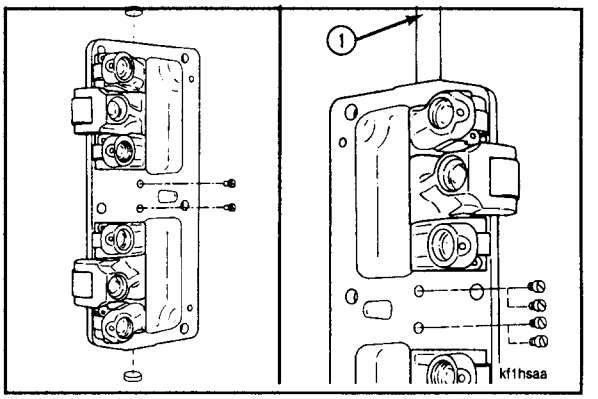

Install

1. Install the new cam follower gaskets to the block as follows:
   a. One Print-O-Seal gasket is required for each cam follower housing.
   b. The Print-O-Seal gasket **must** be installed against the block with the sealing bead toward the cam follower housing.

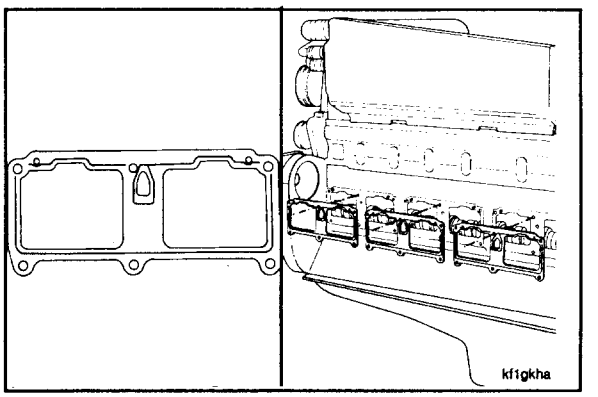

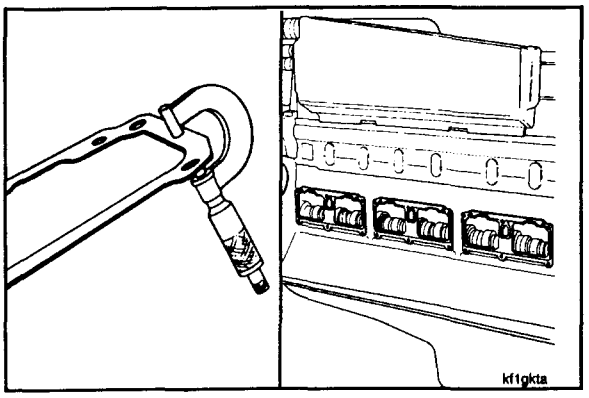

c. Measure the gasket thickness. The new gaskets **must** be the same thickness as the gaskets which were removed.

d. Install the gaskets over the dowel pins in the block.

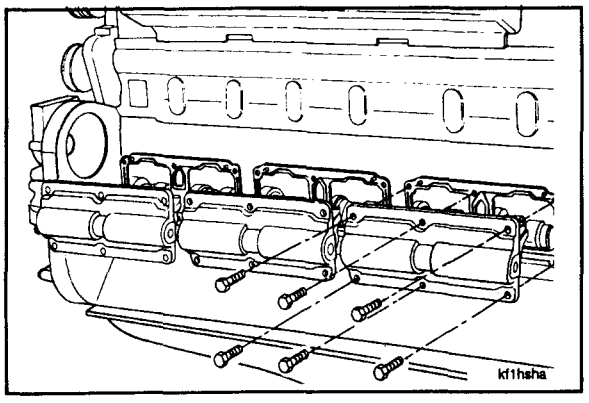

2. Install the cam follower assemblies on the dowel pins in the block as follows:

   a. Install six capscrews in each cam follower housing.

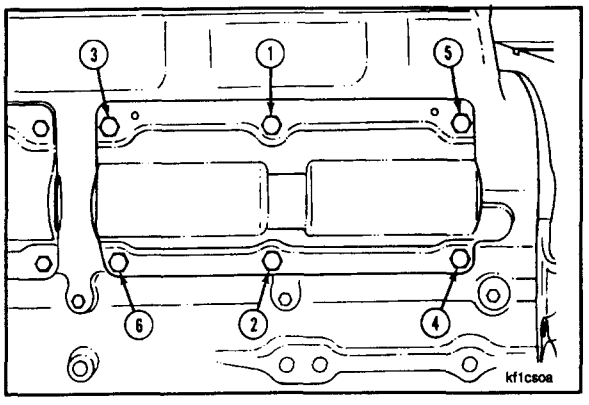

   b. Tighten the capscrews in the alternating sequence shown to the following torque values:

      1) Tighten to 20 N•m [15 ft-lbs].

      2) Tighten to 45 N•m [35 ft-lbs].

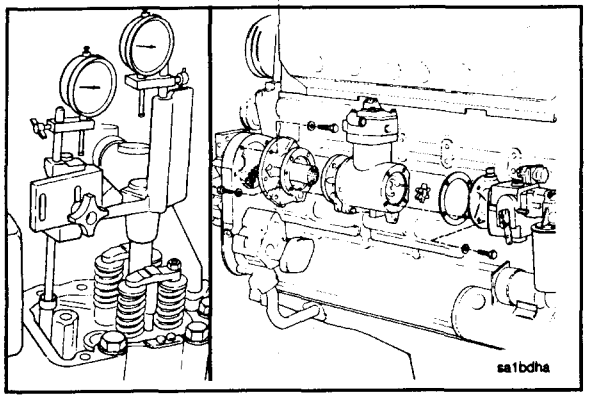

3. Check the injection timing. Refer to Procedure 7-16.

4. Install the accessory drive assembly. Refer to Procedure 7-28.

5. Install the air compressor (if used). Refer to Procedure 4-12.

6. Install the fuel pump. Refer to Procedure 5-07.

7. Install the push rods. Refer to Procedure 7-08.
8. Install the rocker lever housings. Refer to Procedure 7-09.
9. Adjust the valves and injectors. Refer to Procedure 7-04.

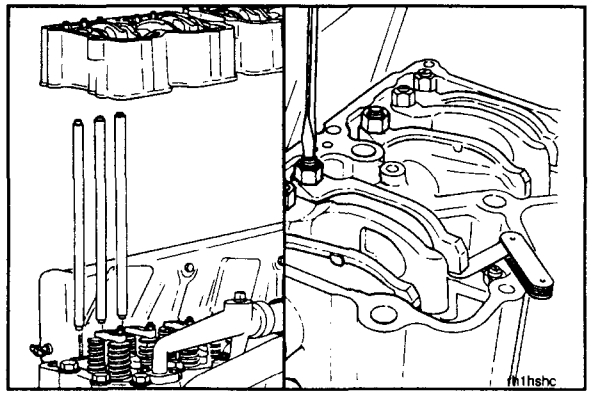

10. Install the rocker housing covers. Refer to Procedure 7-02.
11. Operate the engine, and check for leaks and engine operation.

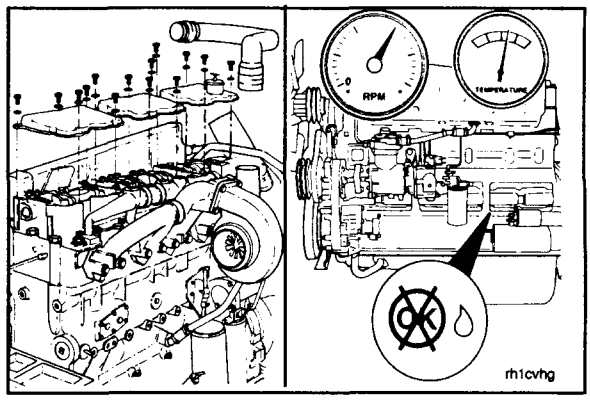

Mechanical Variable Timing (MVT) System - (7-14)

MVT Rapid Advance Mechanism (RAM) Check Valve - Leak Check

1. Operate the engine until the vehicle air supply reaches at least 620 kPa [90 psi].

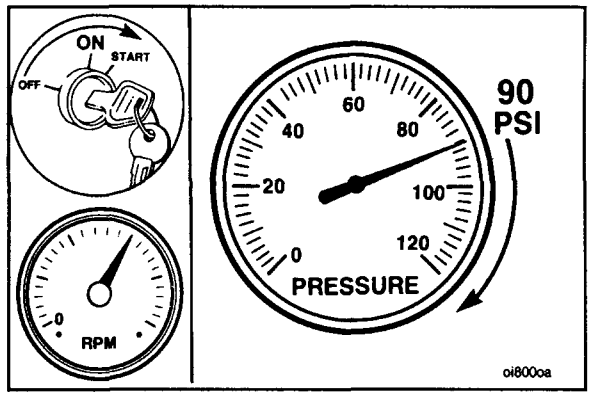

2. Shut the engine off.
3. Remove the vehicle air supply hose from the check valve.

NOTE: This will discharge the air supply from the vehicle air tanks.

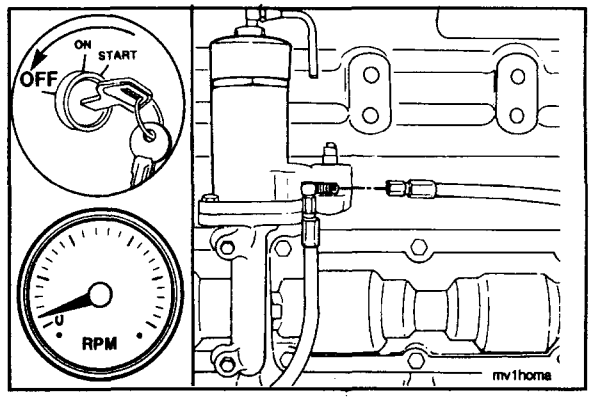

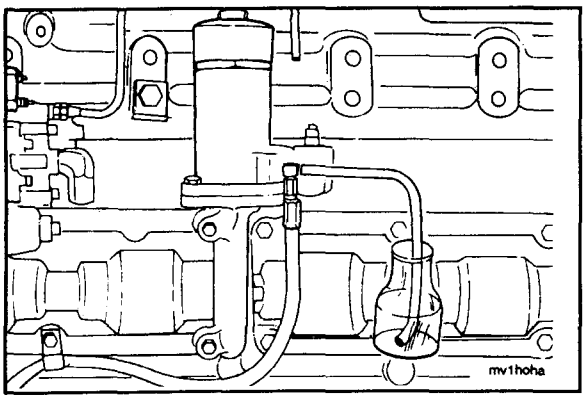

4. Attach a short piece of hose to the check valve.
5. Put the free end of the hose below the water level in a container of water.

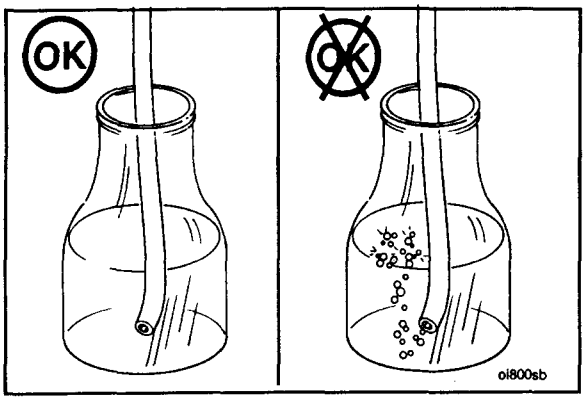

6. Check for a continuous flow of air bubbles from the hose in the container of water.
7. A continuous flow of air bubbles indicates that the check valve is defective and **must** be replaced.

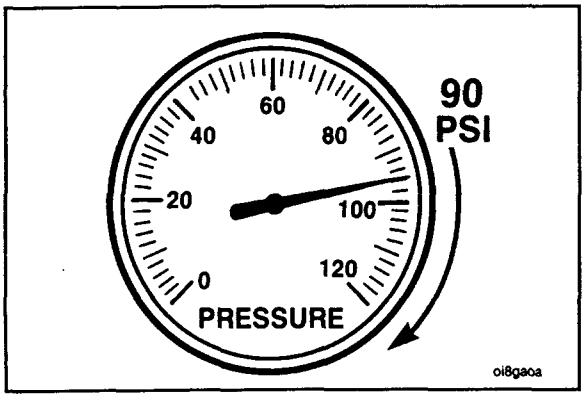

Operational Check

1. The vehicle air system **must** provide more than 620 kPa [90 psi] air pressure from a dry air supply to operate the MVT system.

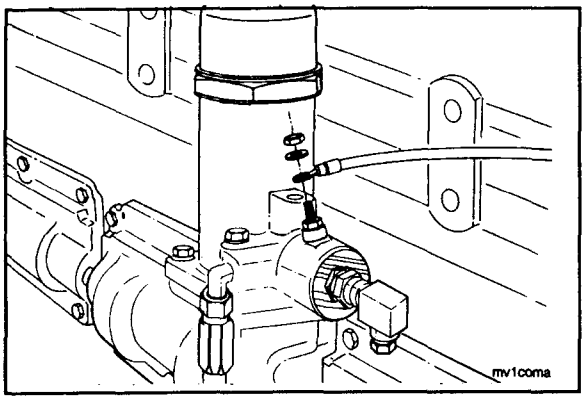

2. Remove the electrical wire from the MVT air solenoid.

Warning: Do not remove the actuator cap while the engine is operating. Serious personal injury can result.

3. Remove the actuator cap. Operate the engine, and check the actuator plunger movement.

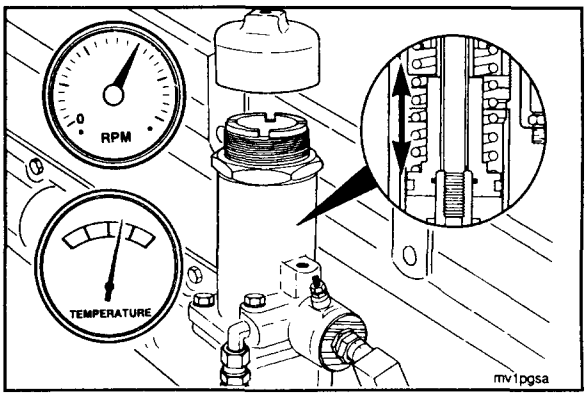

4. Connect the electrical wire to the air solenoid. The actuator plunger **must** move up to the top of its travel within one second with the engine running.

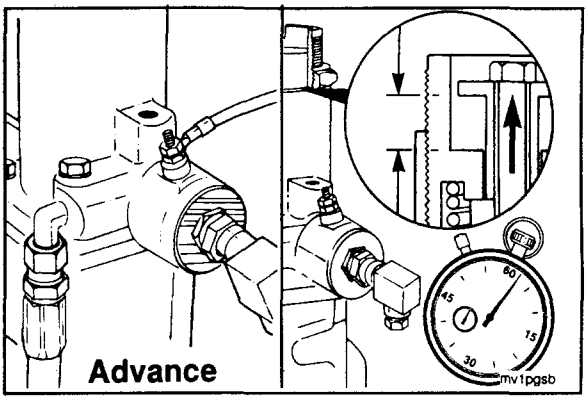

5. Remove the electrical wire from the air solenoid.The actuator piston **must** return to the bottom of its travel (32 to 38 mm [1.25 to 1.50 inches]) within 12 to 15 seconds.

NOTE: If the actuator plunger does **not** operate as described, complete the following inspections:

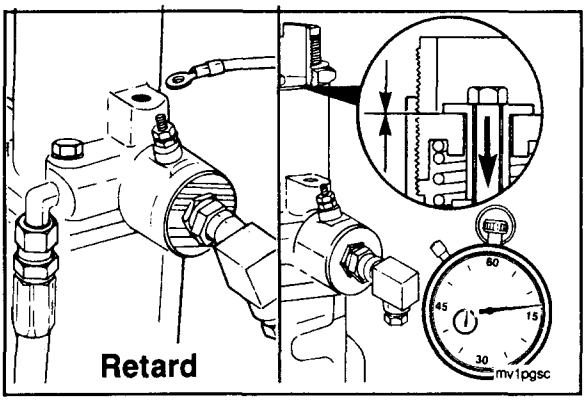

Low Air Pressure at MVT Actuator Cylinder

1. Remove the air supply hose from the MVT actuator housing. Install an air pressure gauge capable of measuring 1030 kPa [150 psi] in the supply line. Install the air supply line with a gauge installed to the actuator housing.

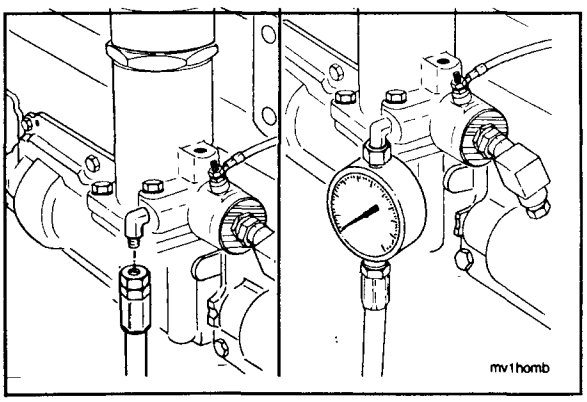

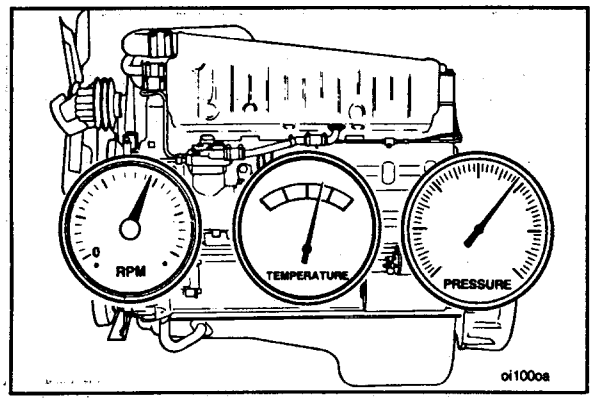

2. Operate the engine to activate the air compressor. Allow the air pressure to exceed 620 kPa [90 psi].

NOTE: If the system air pressure will not reach 620 kPa [90 psi], refer to Procedure 4-11.

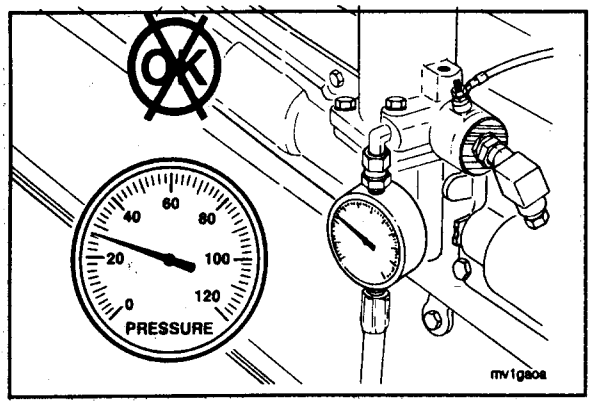

3. The air pressure at the MVT actuator cylinder **must** be the same as the vehicle air system pressure.
4. Check the air pressure at the MVT actuator housing. If the air pressure at the actuator housing is less than 620 kPa [90 psi], the line which connects the air tank to the MVT actuator **must** be cleaned or replaced. Repeat the "System Operational Check" as outlined in this Procedure.

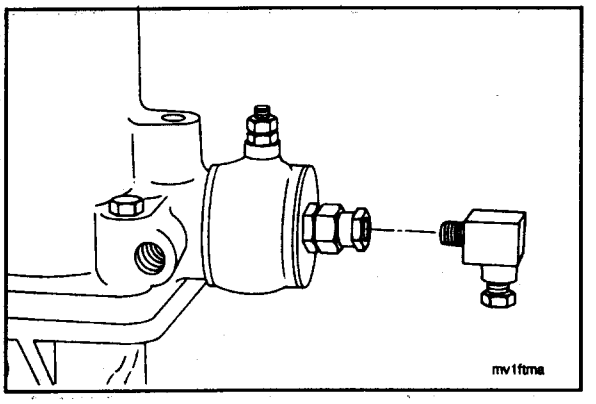

MVT Air Pressure Bleed Orifice Plug Restricted or Missing

1. Remove the elbow fitting from the MVT solenoid.

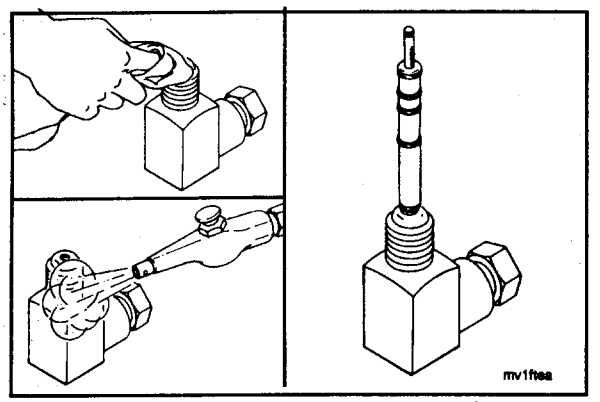

2. Clean the orifice plug with mineral spirits, and dry with compressed air.

   Use Part No. ST-1332 Injector Orifice Plug Measurement Tool to determine the diameter of the air pressure bleed orifice plug.

3. The correct orifice part number and size is determined by the engine model. Refer to the accompanying chart to determine which orifice is required for each engine model.

Engine Model	Orifice Part No.	Orifice Size
		mm [inch]
NTC-475	3045046	0.25 [0.010]
NTCC-400	3045048	0.33 [0.013]
NTCC-350	3044990	0.38 [0.015]
NTCC-300	3044990	0.38 [0.015]
NTCC-240	3044990	0.38 [0.015]

mv100na

4. Install the elbow fitting in the MVT solenoid, and repeat the "System Operational Check" as outlined in this Procedure.

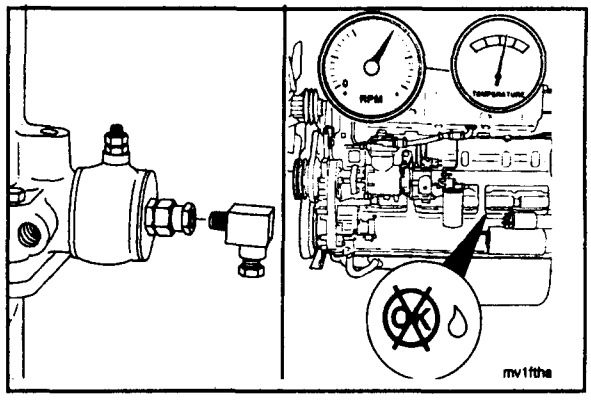

MVT Wiring Harness - Check

1. Remove the electrical wiring harness from the MVT fuel pressure switch.

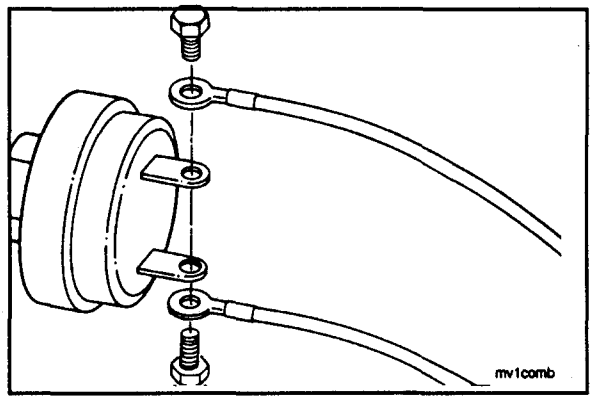

Caution: This procedure must be used only for checking the wiring harness. Operating the engine with the fuel pressure switch bypassed will adversely affect engine emissions and may lead to progressive engine damage.

2. Connect the two wiring harness lead wires together at one of the pressure switch terminals with the terminal screw.

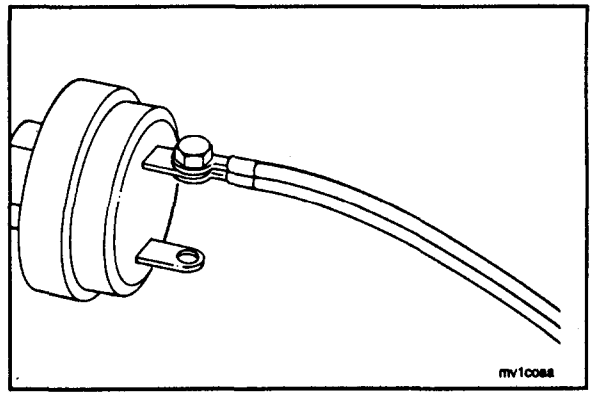

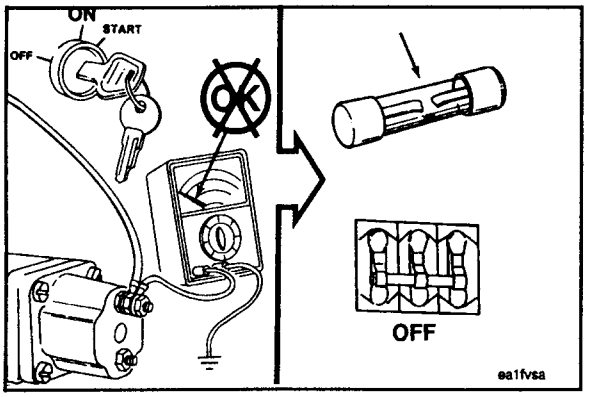

3. Turn the vehicle ignition key to the "ON" position, and use a volt/ohm meter to measure voltage at the fuel shutoff solenoid. The voltage **must** be the same as the battery voltage. If the battery voltage is **not** measured, check for an open circuit breaker or a blown fuse.

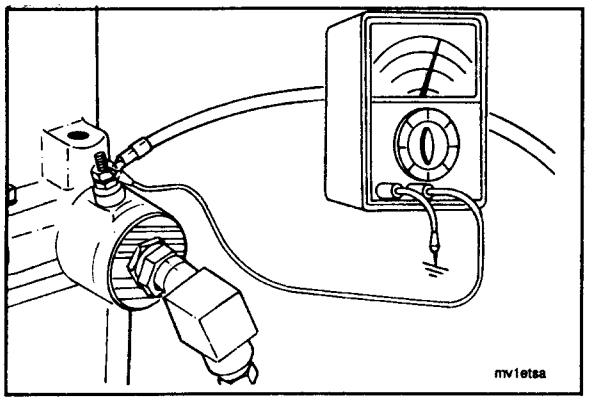

4. If battery voltage is measured at the fuel shutoff solenoid, use the volt/ohm meter to measure voltage at the MVT air solenoid terminal. If the battery voltage is **not** measured at the air solenoid terminal, replace the wiring harness.

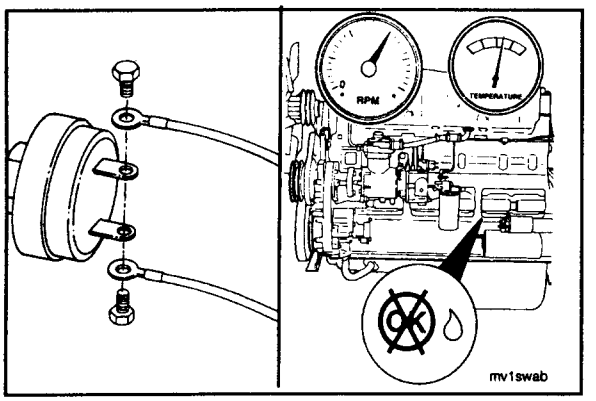

5. After checking the voltage and making the necessary repairs, connect the wiring harness leads to the fuel pressure switch and perform an MVT "System Operational Check" as outlined in this Procedure.

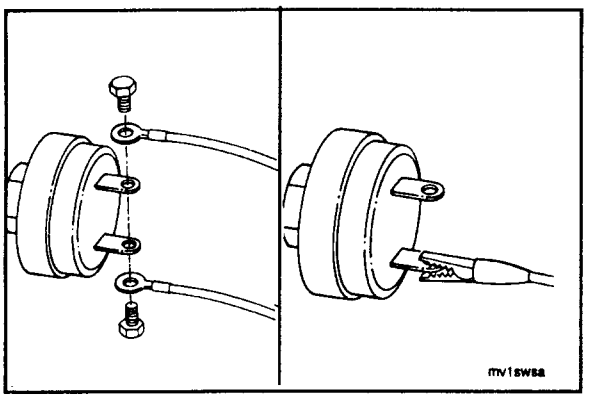

MVT Fuel Pressure Switch - Check

1. Shut the engine off. Remove the two electrical wires from the fuel pressure switch terminals. Use an electrical jumper lead from the batteries to apply 12 volts to one of the pressure switch electrical terminals.

2. Use a volt/ohm meter to measure voltage at the other fuel pressure switch terminal. Battery voltage **must** be seen at both terminals.

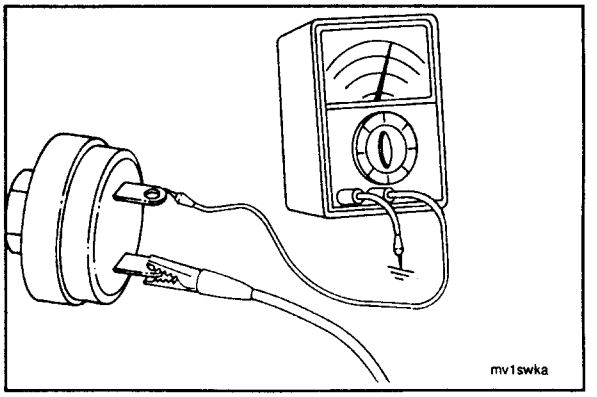

3. Operate the engine, and allow the engine system pressures to stabilize. Connect the volt/ohm meter lead to the pressure switch terminals. Quickly move the fuel pump throttle lever to the high idle position.The voltage being measured **must** drop momentarily as the fuel rail pressure increases and then return to normal as the engine speed stabilizes at high idle. Replace the fuel pressure switch if it does **not** operate as described.

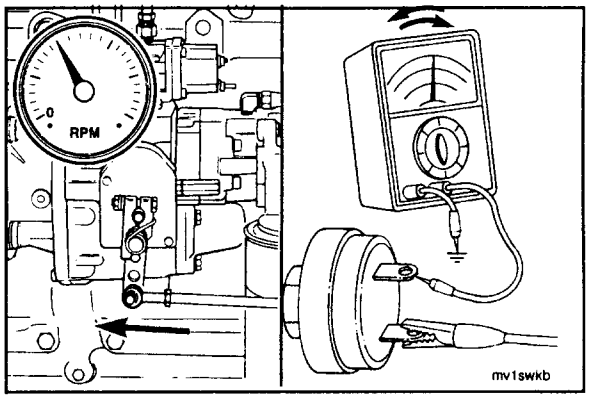

4. Connect the two electrical wires to the fuel pressure switch, and perform an MVT "System Operational Check" as outlined in this Procedure.

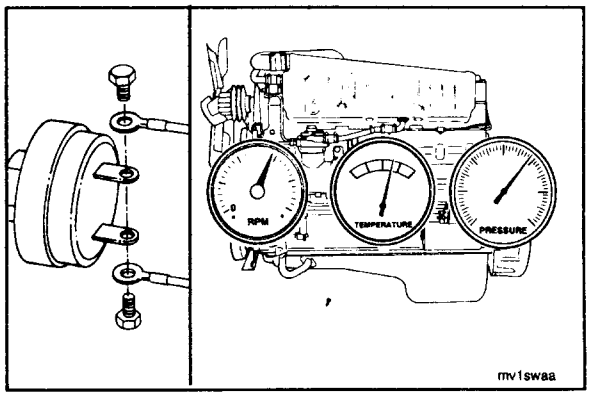

MVT Air Solenoid - Check

1. Remove the electrical lead from the terminal on the air solenoid. Use an electrical jumper lead from the batteries to apply 12 volts to the air solenoid electrical terminal.

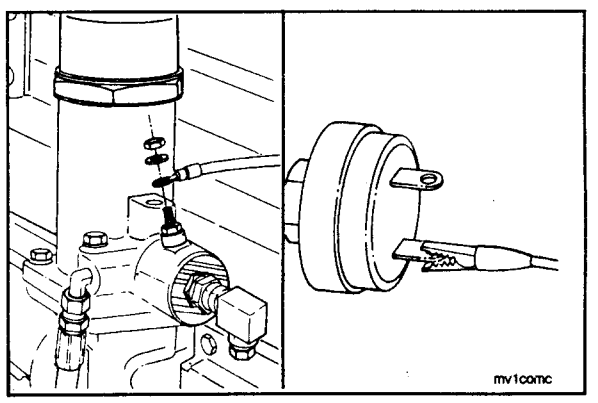

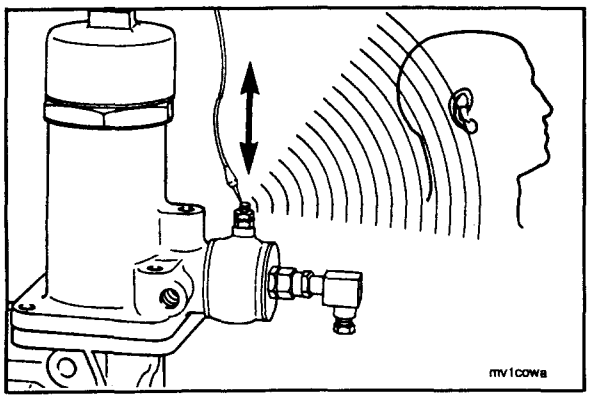

2. Connect and remove the jumper lead to the electrical terminal on the air solenoid.

   A clicking sound **must** be heard as the electrical current is applied and removed from the solenoid. Replace the solenoid if it does **not** operate as described. Refer to Procedure 7-15.

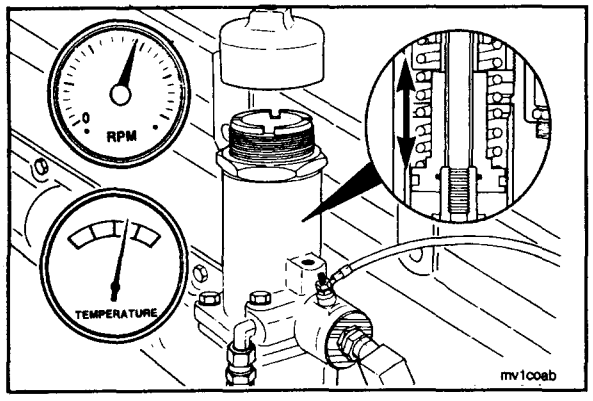

3. Connect the electrical lead to the solenoid and perform an MVT "System Operational Check" as outlined in this Procedure.

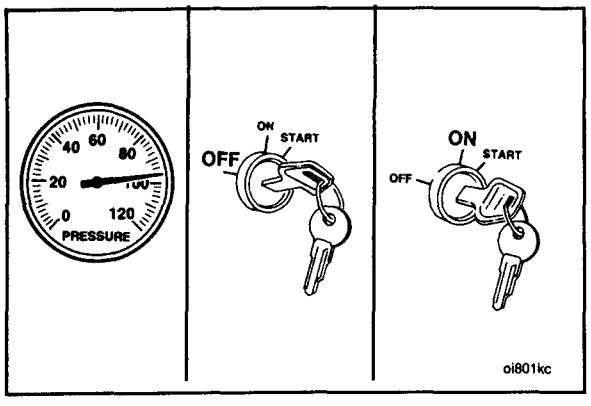

MVT Actuator Plunger Seal Leakage - Check

1. Operate the engine until the vehicle air pressure exceeds 620 kPa [90 psi].
2. Shut the engine off. Turn the ignition key back to the "ON" position, but do **not** start the engine.

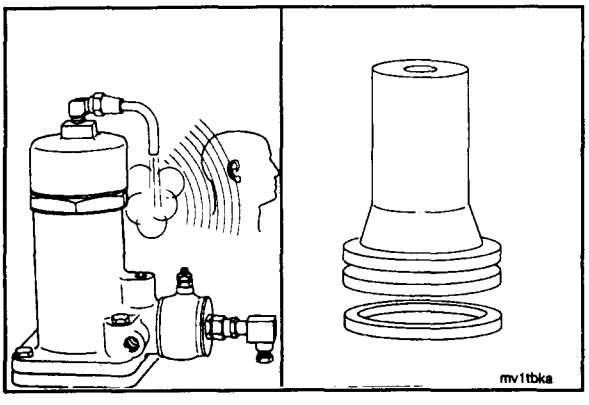

3. Listen for air leakage at the actuator cylinder vent tube.
4. If air leakage is detected at the vent tube, replace the actuator plunger seal.

MVT Actuator Plunger Seal - Replace

Remove

1. Remove the actuator cap. Hold the slotted actuator spring retainer to prevent it from turning while removing the lock nut.
2. Use a depth gauge to measure the distance between the top of the actuator cylinder and the top of the spring retainer. Record the measurement.

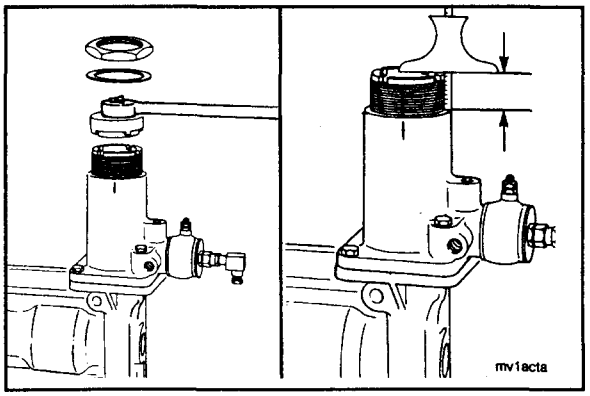

3. Remove the capscrew and the timing spacer.

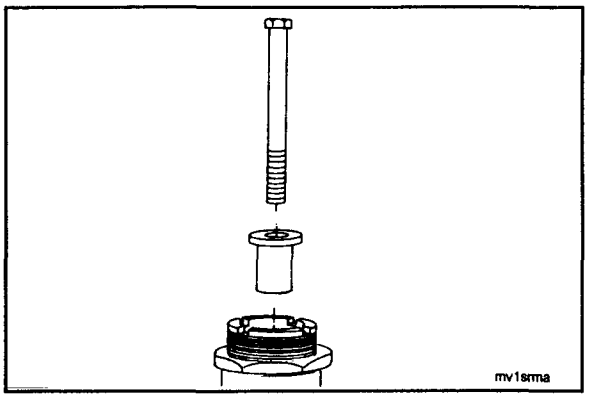

4. Remove the spring retainer, the actuator spring, and the actuator plunger.

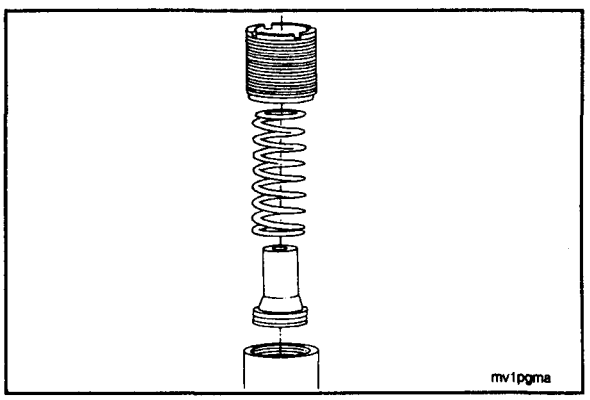

5. Remove the seal from the actuator plunger.

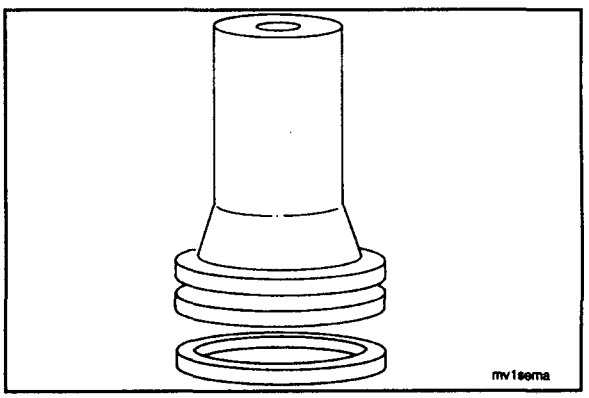

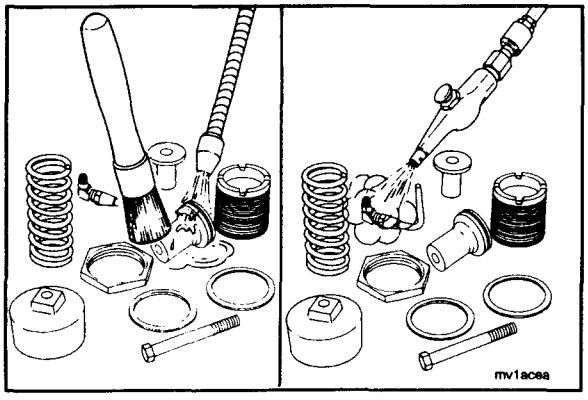

Clean and Inspect

1. Clean all of the actuator parts with solvent, and dry with compressed air.

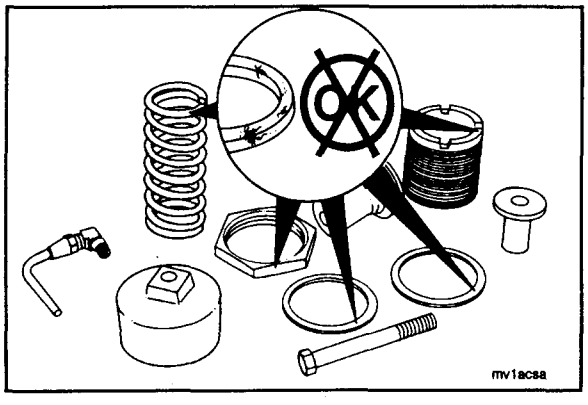

2. Visually inspect all parts for cracks or excessive wear. Replace any defective or worn parts.

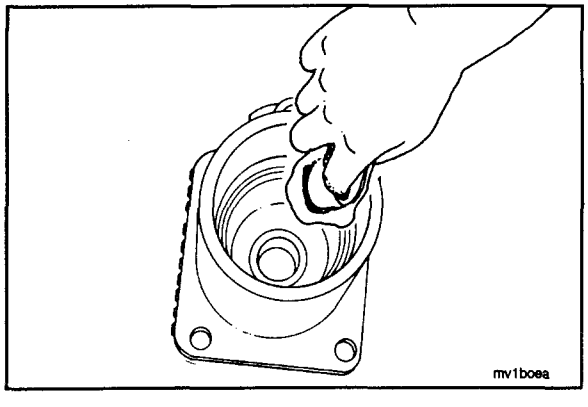

3. Use a clean cloth saturated with solvent to clean the actuator cylinder bore. Dry with compressed air.

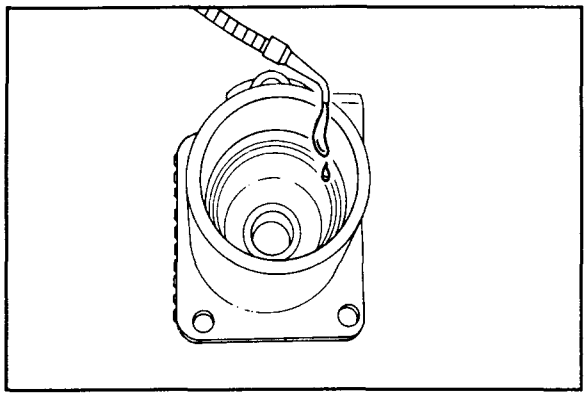

4. Use clean 15W-40 oil to lubricate the actuator cylinder bore.

Install

Caution: Be careful not to roll or damage the plunger seal as it passes the lead-in chamfer in the actuator cylinder.

1. Install a new seal on the actuator plunger.
2. Install the plunger in the actuator cylinder.

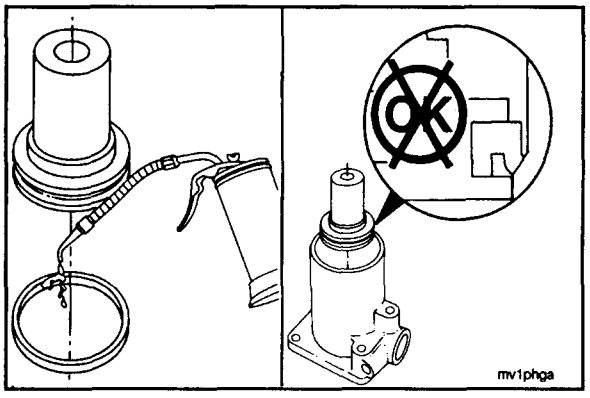

3. Install the spring and the spring retainer. Use light pressure to start the thread engagement on the spring retainer.

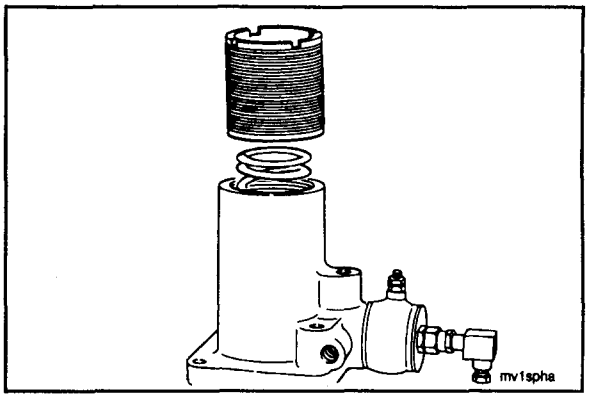

Caution: The spring retainer must be installed to its original depth to maintain the correct injection timing.

4. Install the spring retainer to the same depth that it was before it was removed.
5. Use a depth gauge to adjust the spring retainer to the specified depth.

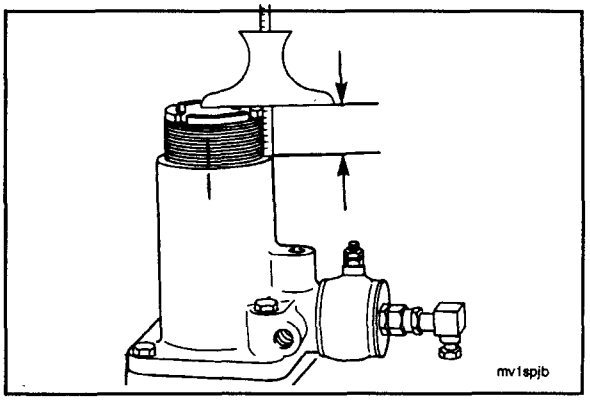

6. Install the washer (if equipped) and the lock nut. Hold the spring retainer with Part No. 3376021 Retainer Adjusting Tool while the lock nut is tightened. Tighten the lock nut to 45 N•m [35 ft-lbs] torque. Measure the depth of the spring retainer.

NOTE: The spring retainer **must not** turn when the lock nut is tightened.

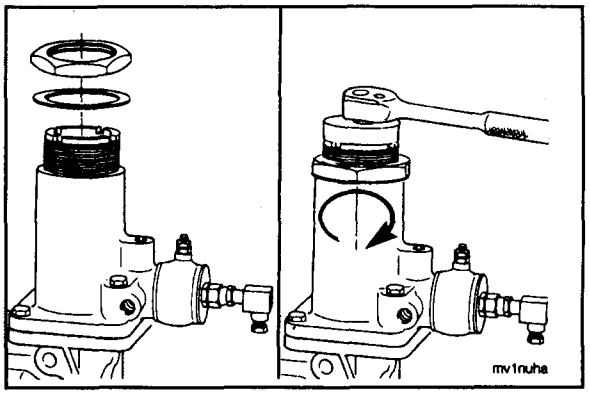

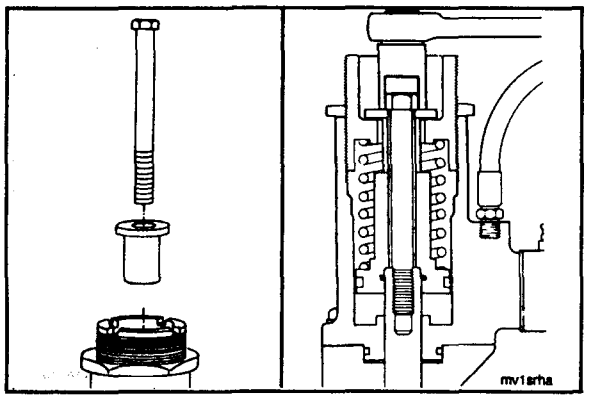

7. Install the timing spacer and the capscrew through the spring retainer. Tighten the capscrew to 60 N•m [45 ft-lbs] torque.

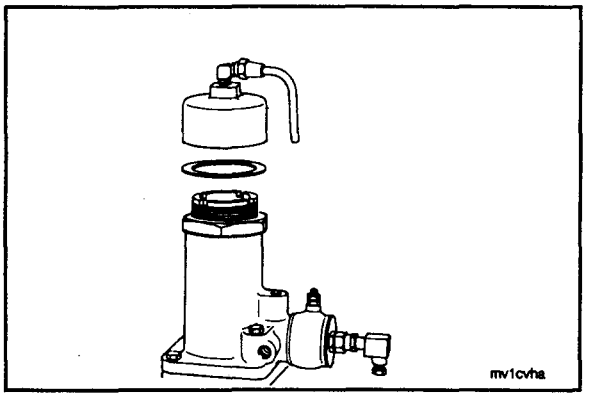

8. Install the washer (if equipped) and the actuator cap. Tighten to 40 N•m [35 ft-lbs] torque.

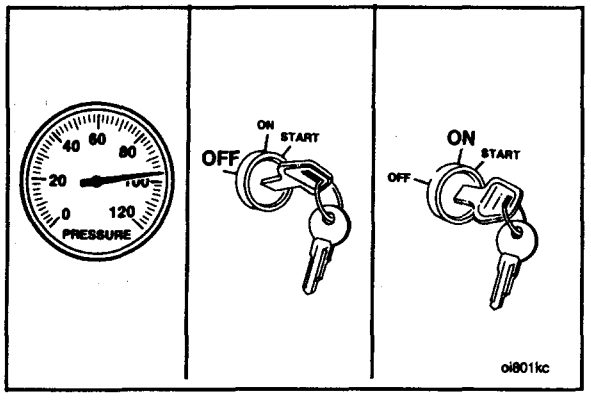

9. Operate the engine until the vehicle air pressure exceeds 620 kPa [90 psi].
10. Shut the engine off. Turn the ignition key to the "ON" position, but do **not** start the engine.

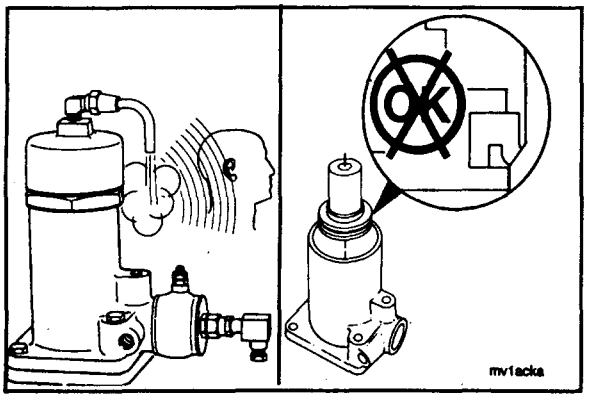

11. Listen for air leakage at the actuator cylinder vent tube.
12. If air leakage is detected at the vent tube, check the actuator plunger seal for damage during installation.

Cam Followers (MVT Injection Timing)- Replace (7-15)

NOTE: The cam follower housings and the MVT actuator **must** be removed from the engine as an assembly.

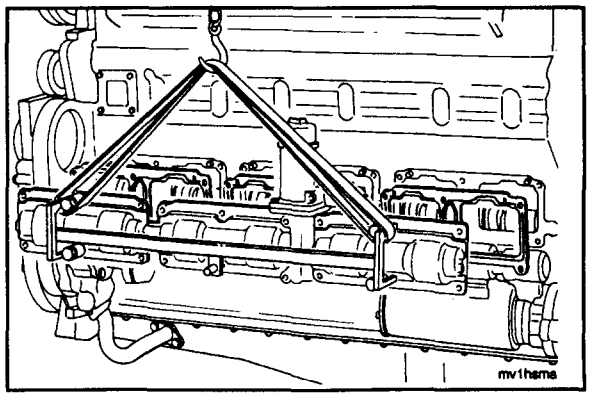

Remove

1. Remove the rocker lever housing. Refer to Procedure 7-09.
2. Remove the push rods. Refer to Procedure 7-08.
3. Remove the fuel pump. Refer to Procedure 5-07.
4. Remove the air compressor (if used). Refer to Procedure 4-12.
5. Remove the accessory drive assembly. Refer to Procedure 7-28.

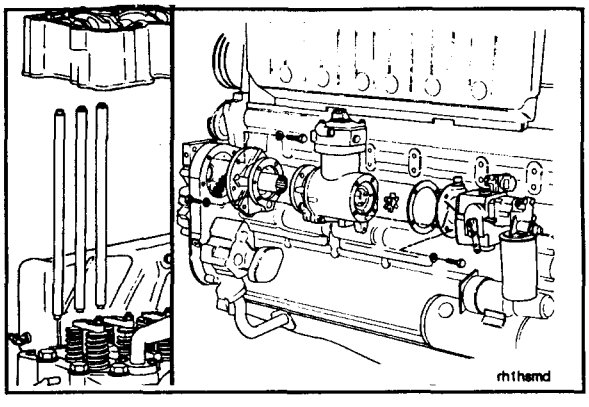

6. Remove the wiring harness from the actuator solenoid.
7. Remove the air supply and the breather tubes.

NOTE: To prevent increased wear, mark the cam follower housings and the levers as they are removed so they can be installed back in their original location on the block.

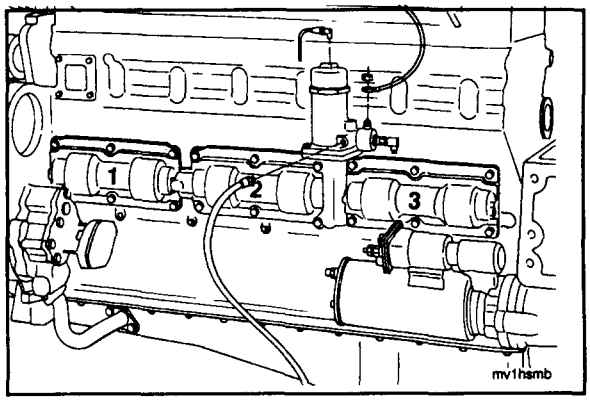

8. Remove the two center capscrews from the front and the rear housings of the assembly.
9. Install Part No. 3376028 Variable Timing Fixture to the housings.

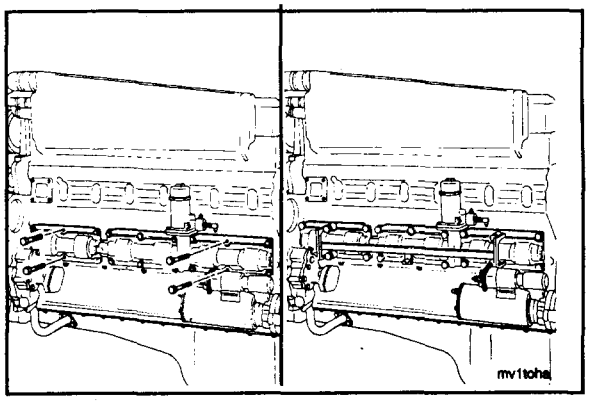

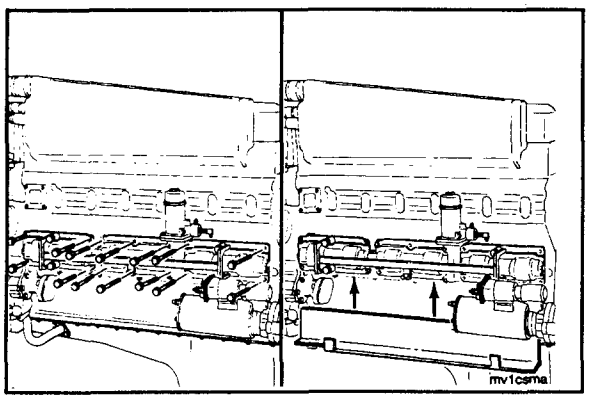

10. Remove the six capscrews from the center housing.
11. Remove the remaining four capscrews from the front and the rear housings of the assembly.
12. Install Part No. 3376209 Bracket to the variable timing fixture, Part No. 3376028.

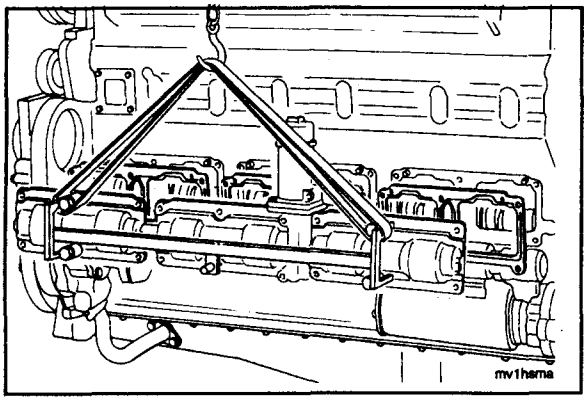

Warning: Because this assembly weighs more than 23 kg [50 lbs], two people or a hoist will be required to lift the cam follower and actuator assembly to avoid personal injury.

13. Remove the cam follower housing and the actuator assembly.
14. Remove and discard the gasket.

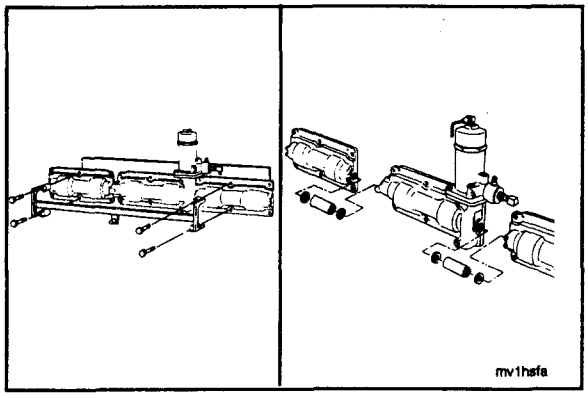

Disassemble

Cam Follower Assembly

1. Remove the MVT fixtures.
2. Remove the housing to the left of the center housing.
3. Remove the spline coupling and the seal.
4. Remove the housing and the seal to the right of the center housing.

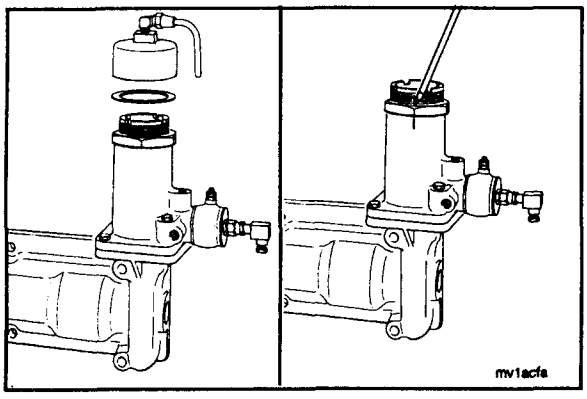

MVT Actuator

1. Remove the cap and the washer from the actuator.
2. Remove the lock nut and the washer for the spring retainer as follows:
   a. Put a scribe mark on the spring retainer and the actuator housing to make sure the retainer does not move.

b. Use Part No. 3376021 Actuator Adjusting Tool to hold the retainer.

c. Remove the lock nut and the washer.

d. Measure and record the distance from the top of the spring retainer to the top of the actuator housing.

NOTE: This procedure will restore the injection timing to the approximate timing prior to disassembly of the actuator.

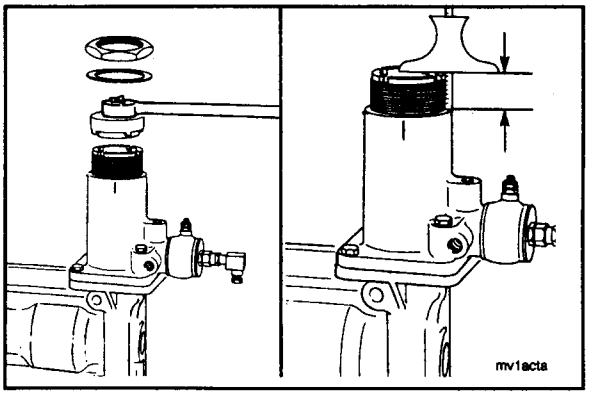

3. Remove the capscrew from the actuator shaft as follows:

   a. Lightly hit the capscrew with a plastic hammer or the hammer handle to make sure the plunger is down.

   b. Remove the capscrew.

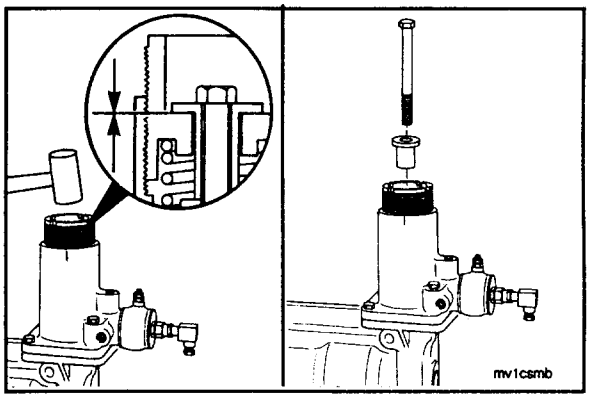

4. Remove the spring retainer and the spacer.
5. Remove the actuator housing and the shaft from the cam follower housing.
6. Remove the plunger and the shaft from the actuator housing.

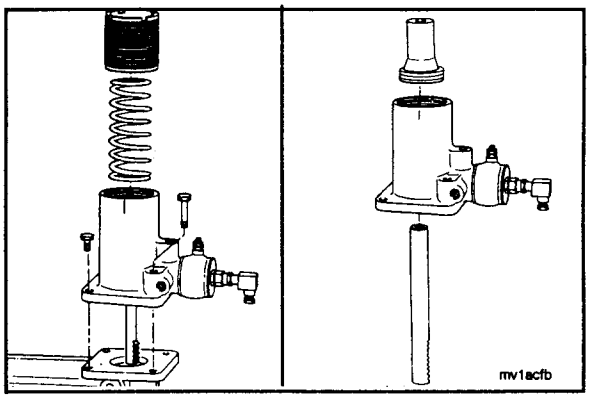

7. Remove the air filter and the elbow from the solenoid valve.
8. Remove the air filter adapter and the O-ring.
9. Remove the jam nut.
10. Remove the solenoid valve.

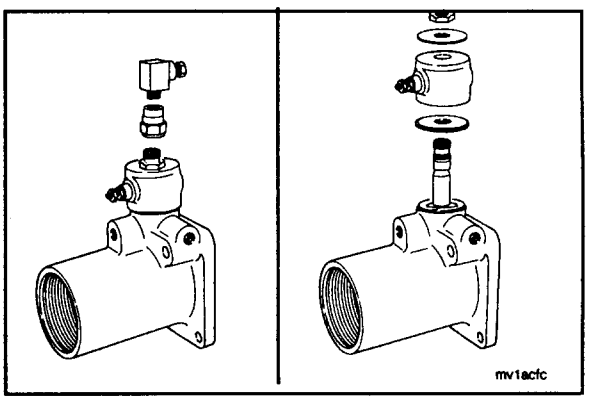

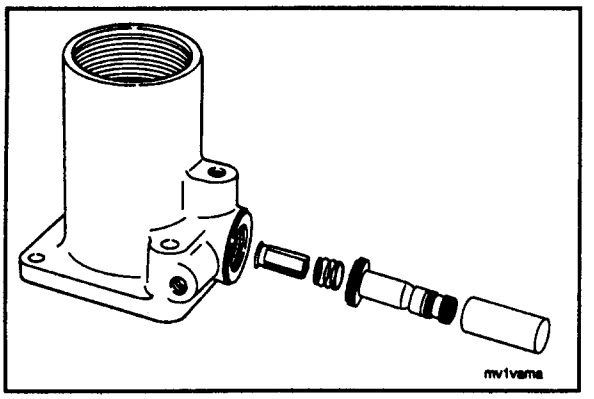

11. Use Part No. 3376023 Solenoid Stem Installation/Removal Tool to remove the solenoid stem from the actuator housing.
12. Remove the spring and the sealing ring.

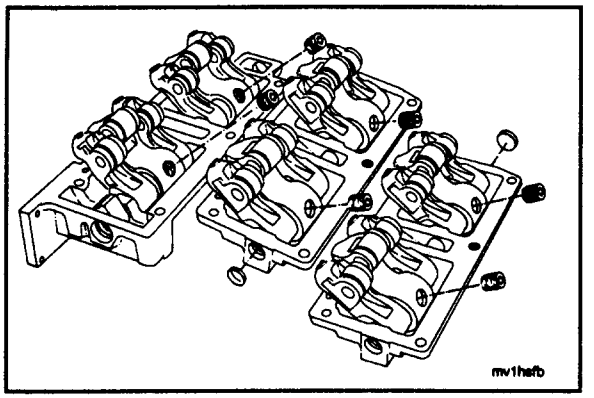

Cam Follower Housings

1. Remove the cup plugs from the cam follower housings.
2. Remove the set screws from the injector cam follower levers.

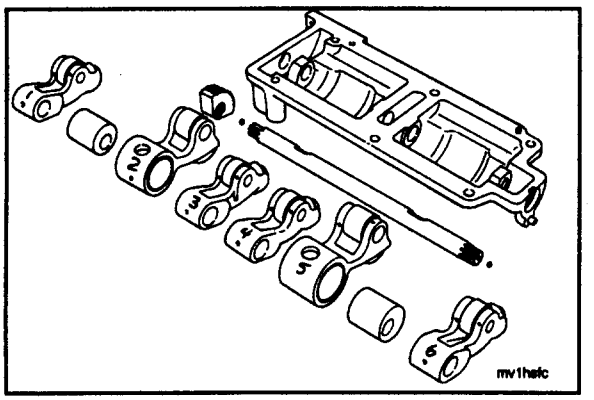

3. Remove the shaft and the levers from the housing. Remove the actuator gear (center housing only).
4. Remove the expansion plugs from the cam follower shafts.
5. Remove the cam follower eccentrics from the injector cam follower levers.

NOTE: To prevent increased wear, mark the cam follower shafts and the levers as they are removed so they can be installed back in their original position in the housing.

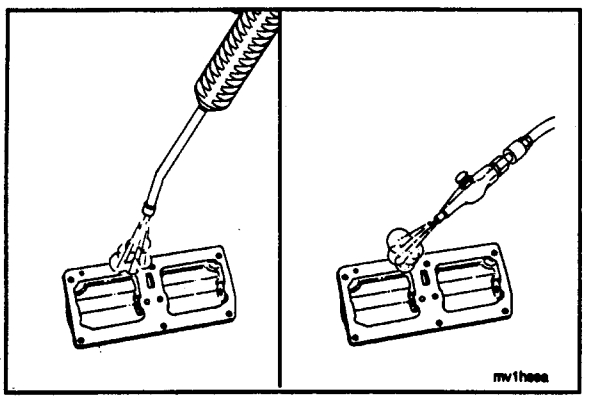

Clean and Inspect

Cam Follower Housings

1. Steam clean the cam follower housings, and dry with compressed air.

2. Visually inspect the housings for cracks or damage, and replace if necessary.
3. Visually inspect the cam follower shaft bore. Remove any burrs or sharp edges.
4. Visually inspect the cup plug holes. Remove any burrs or sharp edges.

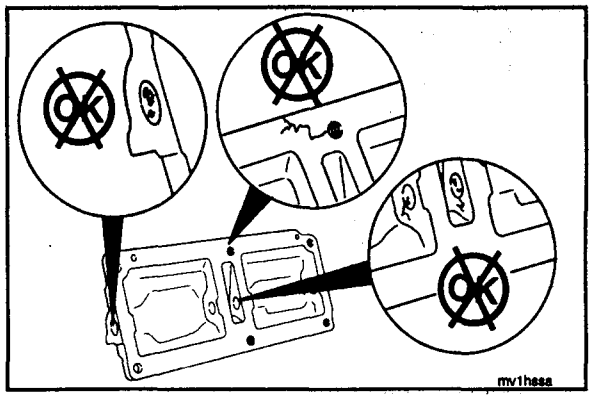

Cam Follower Shafts and Levers

1. Clean the cam follower parts with solvent, and dry with compressed air.

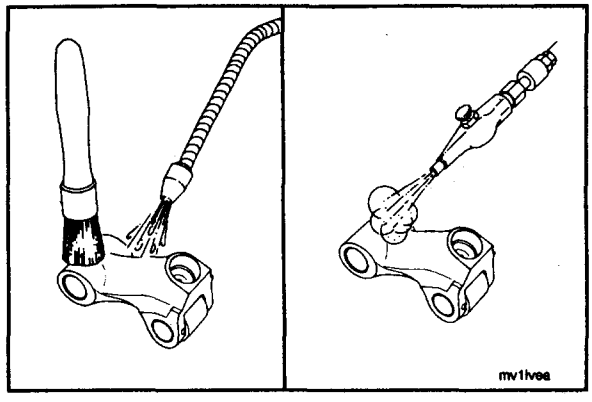

2. Visually inspect the cam followers for cracks or other damage.

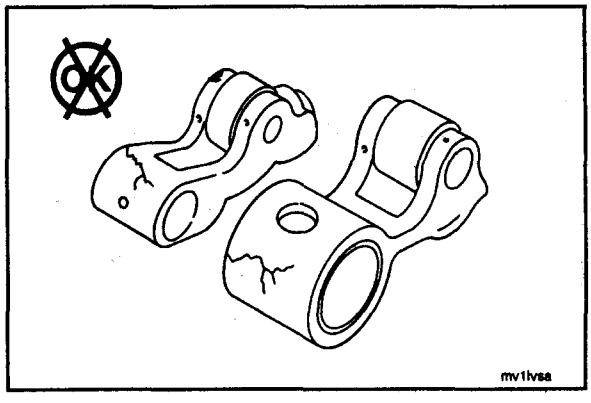

3. Visually inspect the cam follower rollers for flat spots, freedom of rotation, or damage.

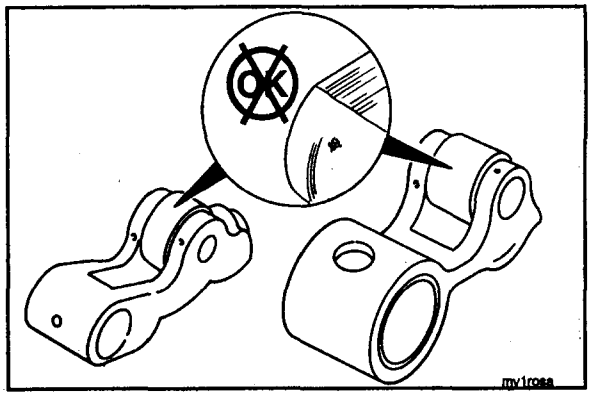

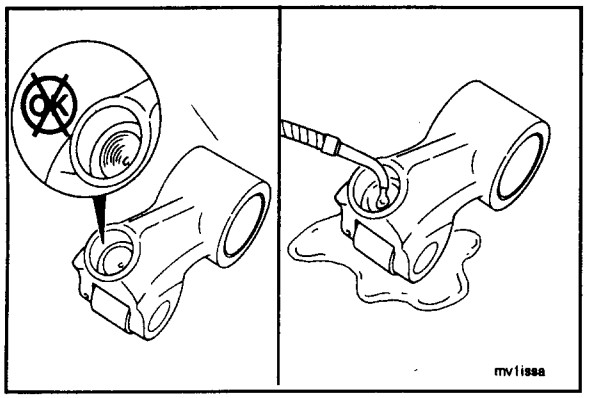

4. Visually inspect the cam follower sockets for excessive wear.

NOTE: If excessive wear is found in the sockets, inspect the push rods. Refer to Procedure 7-08. Do **not** use push rods with excessively worn ball ends in cam followers with new sockets.

5. Use clean 15W-40 oil to check the oil flow through the cam followers.

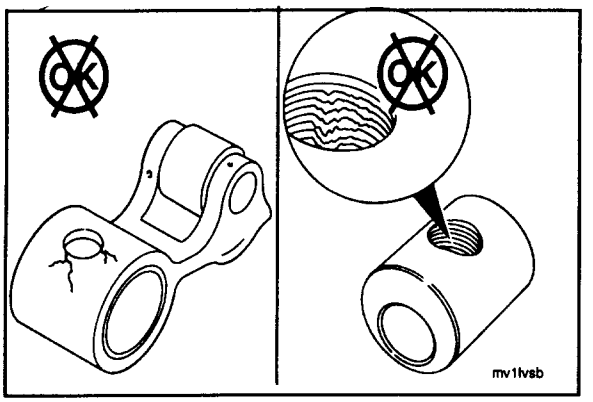

6. Visually inspect the injector levers for cracks or damage.
7. Visually inspect the eccentrics for damaged or distorted set screw threads.

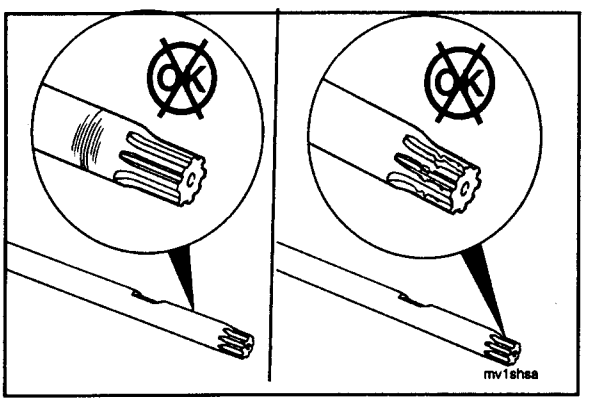

8. Visually inspect the cam follower shafts for scoring or damage.
9. Visually inspect the splined teeth at the end of the shaft for wear or damage.
10. Replace unserviceable parts.

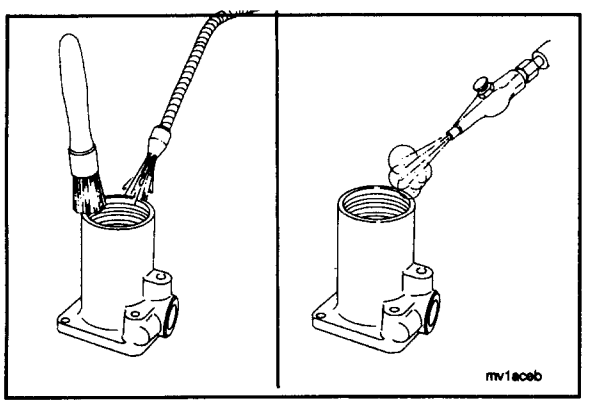

Mechanical Variable Timing (MVT) Actuator

Caution: Do not clean the solenoid coil.

1. Clean the MVT actuator parts with solvent, and dry with compressed air.

2. Visually inspect the actuator housing for cracks or damage.
3. Visually inspect the actuator housing for damaged or distorted threads.

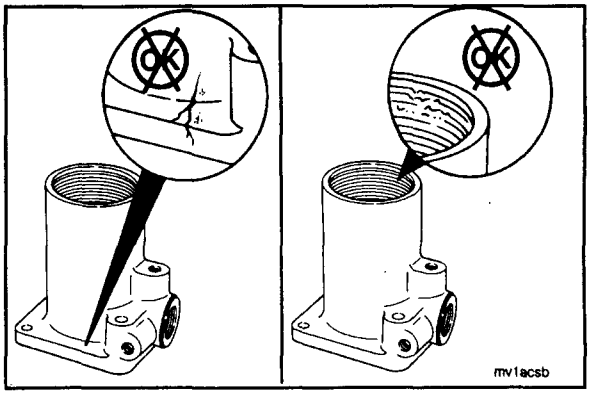

4. Visually inspect the actuator housing cylinder sleeve and the shaft guide for wear or damage.
5. If the cylinder sleeve or the shaft guide is worn or damaged, do the following:

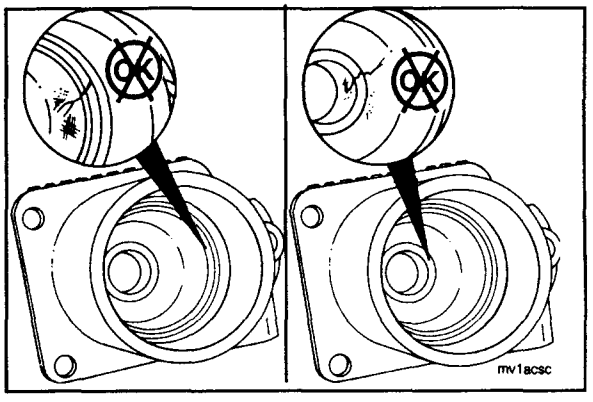

a. Use Part No. 3376025 Sleeve and Guide Removal Tool to press the sleeve and the shaft guide from the housing bore.
b. With the actuator housing mounting surface up and the machined part of the outside diameter of the sleeve up, press the new sleeve into the housing with Part No. 3376024 Sleeve and Guide Installation Tool.

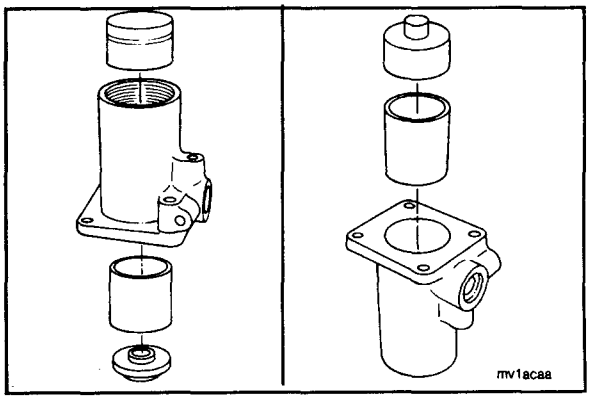

c. Lubricate the new shaft guide O-ring with clean 15W-40 oil. Install the O-ring on the shaft guide.
d. With the O-ring up, press the shaft guide into the housing.

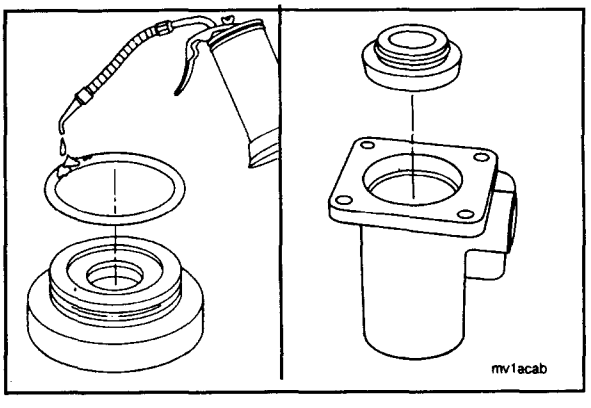

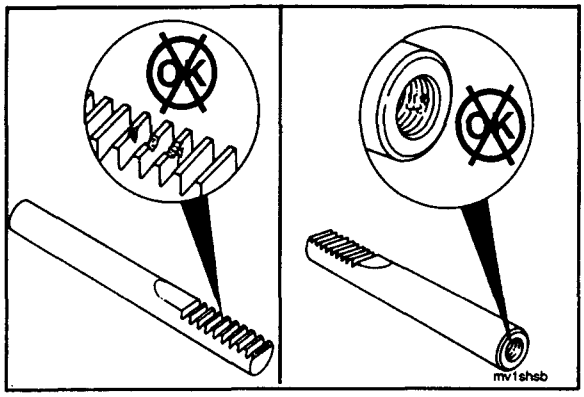

6. Visually inspect the actuator shaft and the shaft teeth for wear or damage.
7. Visually inspect the threads in the end of the shaft for damage.

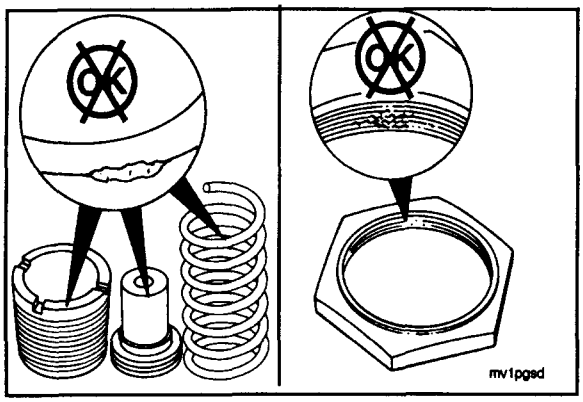

8. Visually inspect the actuator plunger, the spring, and the spring retainer for wear or damage.
9. Visually inspect the spring retainer nut for damaged or distorted threads.

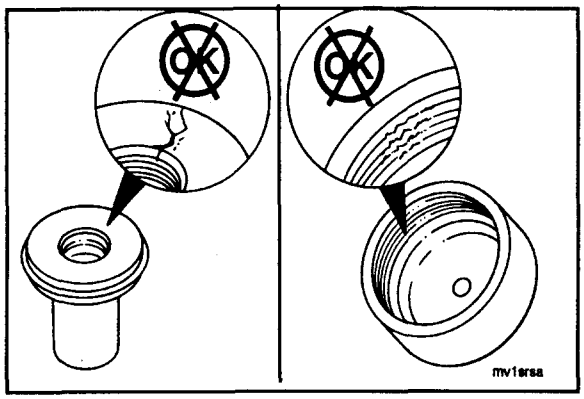

10. Visually inspect the spacer for wear or damage.
11. Visually inspect the actuator cap for damaged or distorted threads.
12. Replace unserviceable parts.

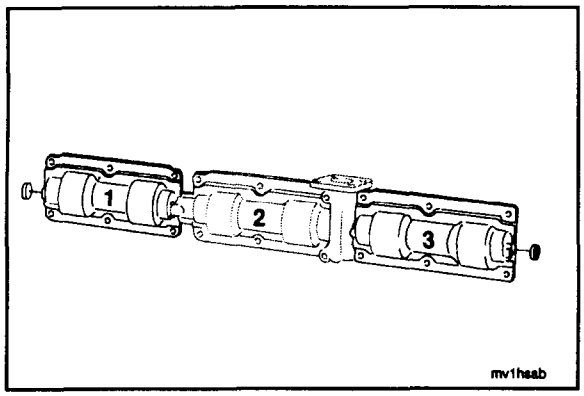

Assemble

Front and Rear Cam Follower Housings

NOTE: The front and the rear cam follower housings require one cup plug per housing. The location mark on the housing when it is removed from the engine will determine where the cup plug **must** be installed. The center housing does **not** require a cup plug.

1. Install a new cup plug in the housing as follows:
   a. Apply a light film of sealant in the cup plug.
   b. Install the cup plug with Part No. ST-1053 Expansion Plug Driver.

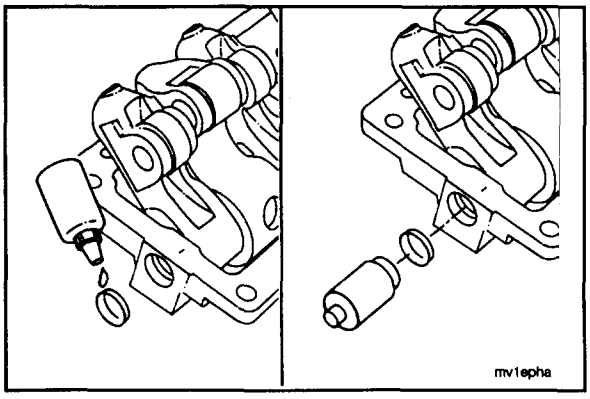

2. Install a cup plug in each end of the cam follower shaft as follows:
   a. Use Part No. 3376186 Expansion Plug Driver.
   b. Push each plug into the shaft until the plugs are even with the end of the shaft.

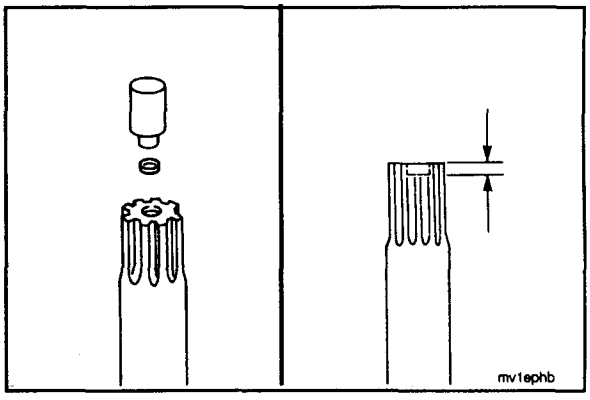

3. Install the eccentrics into the injector cam follower bore as follows:
   a. Install the set screws to hold the eccentrics in position.
   b. Make sure the set screws do **not** extend into the shaft bore of the eccentrics.

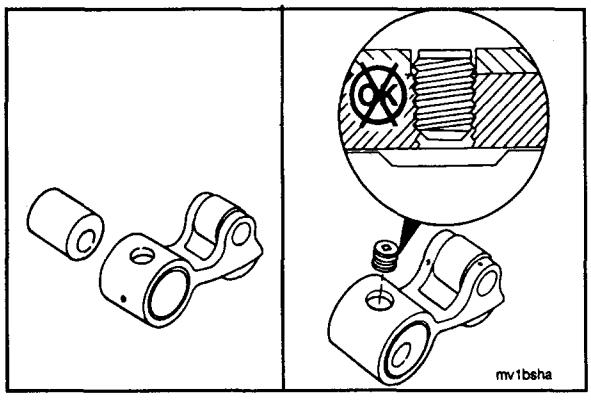

4. Install the valve and the injector cam follower levers in the housing. The number one housing is the front housing (1), and the number three housing is the rear housing (3).

NOTE: To prevent increased wear, mark the cam follower shafts and the levers as they are removed so they can be installed back in their original position in the housing.

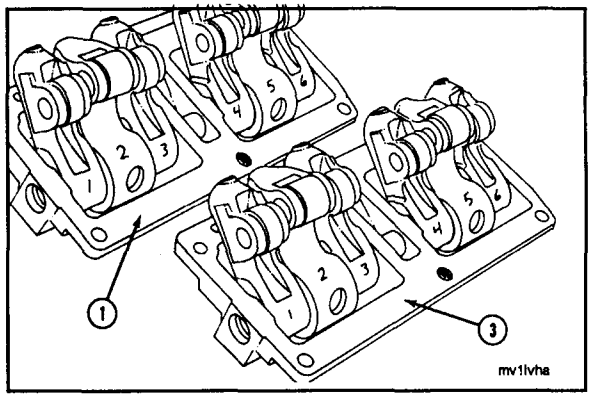

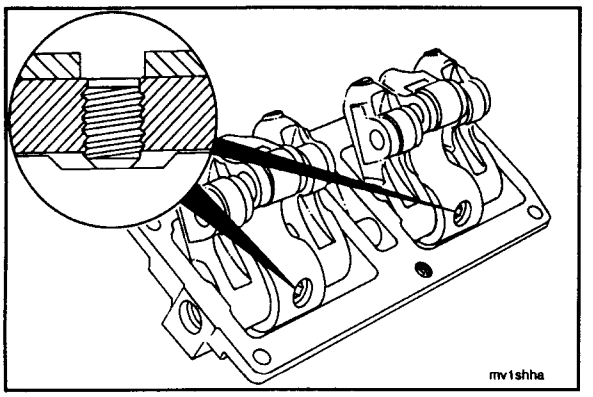

5. Install the shafts in the housings as follows:
   a. Slide the shaft through the housing and the cam follower lever bores.
   b. Make sure the flat part of the shaft aligns with the eccentric set screws.

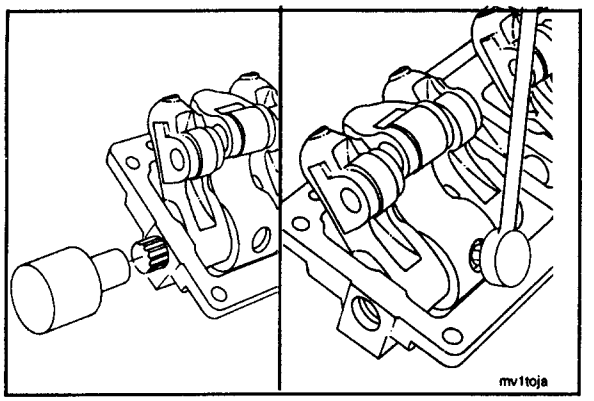

   c. Use Part No. 3376185 Position Gauge to adjust the shaft. The shaft **must** extend from the housing as follows:

Dimensions		
mm		in
23.25	MIN	0.915
23.75	MAX	0.935

   d. Tighten the eccentric set screws to 70 N•m [50 ft-lbs] torque.

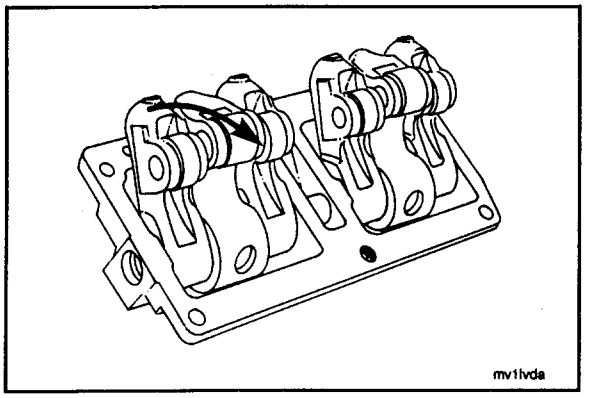

   e. Make sure the cam follower levers move freely on the shaft.

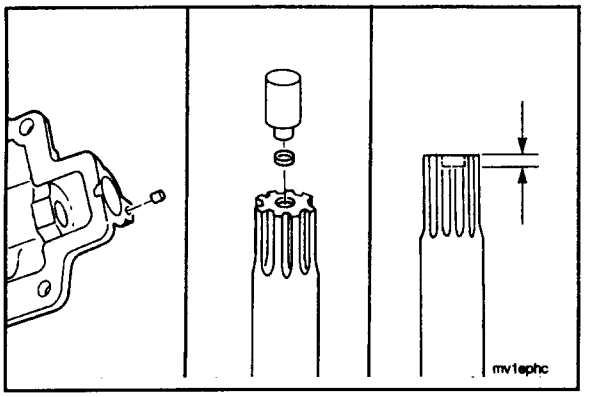

Center Cam Follower Housing

1. Install a roll pin into each end of the cam follower housing.
2. Install an expansion plug into each end of the cam follower shaft as follows:
   a. Use Part No. 3376186 Expansion Plug Driver.
   b. Push each plug into the shaft until the plugs are even with the end of the shaft.

3. Install the eccentrics into the injector cam follower bore as follows:
   a. Install the set screws to hold the eccentrics in position.
   b. Make sure the set screws do **not** extend into the shaft bore of the eccentrics.

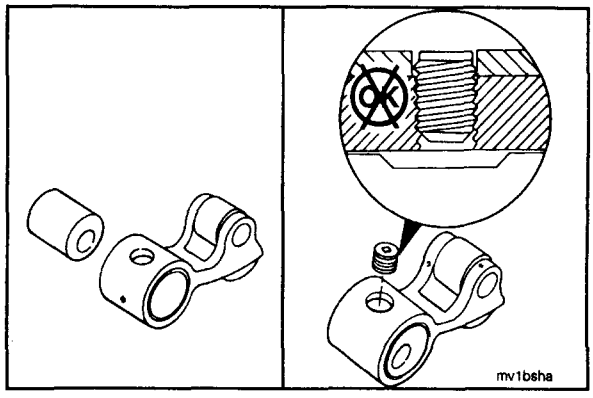

4. Install the valve and the injector cam follower levers in the housing.

NOTE: To prevent increased wear, mark the cam follower shafts and the levers as they are removed so they can be installed in their original position in the housing.

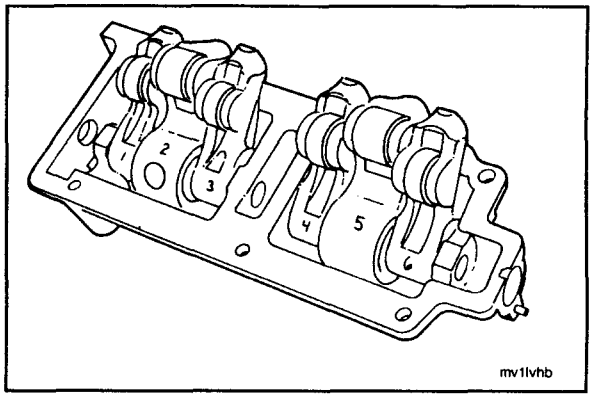

5. Install the actuator gear in the housing as follows:
   a. The teeth of the gear **must** be toward the housing.
   b. The wide tooth of the gear **must** be toward the bottom of the housing.

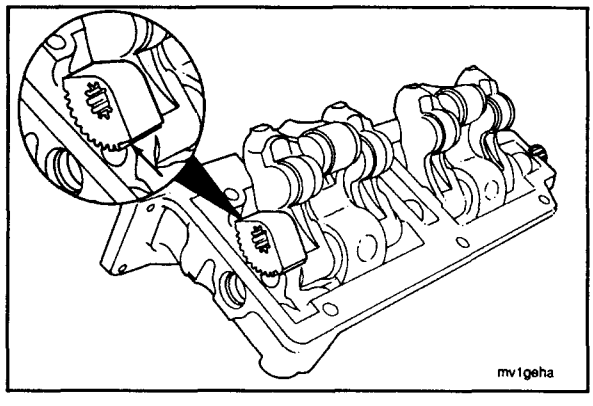

6. Install the shaft into the housing as follows:
   a. Slide the shaft through the housing, the actuator gear, and the cam follower bores.
   b. The wide tooth on the spline **must** align with the wide tooth in the bore in the gear.
   c. Make sure the flat part of the shaft aligns with the eccentric set screws.

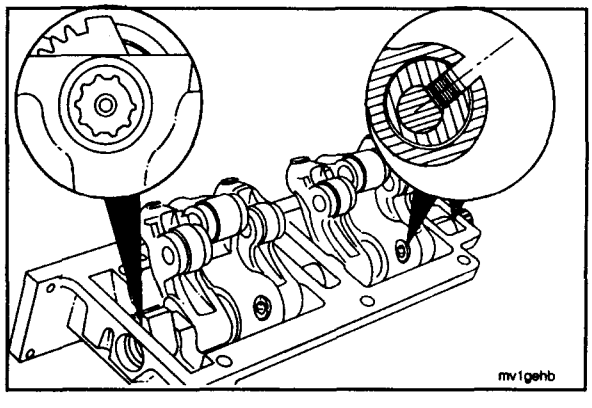

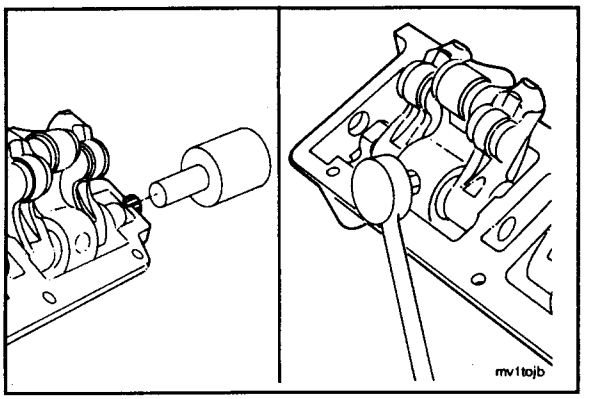

d. Use Part No. 3376185 Position Gauge to adjust the shaft. The shaft end **opposite** the actuator **must** have a depth in the housing as follows:

Dimensions		
mm		in
25.30	MIN	0.996
25.40	MAX	1.000

e. Tighten the eccentric set screws to 70 N•m [50 ft-lbs] torque.

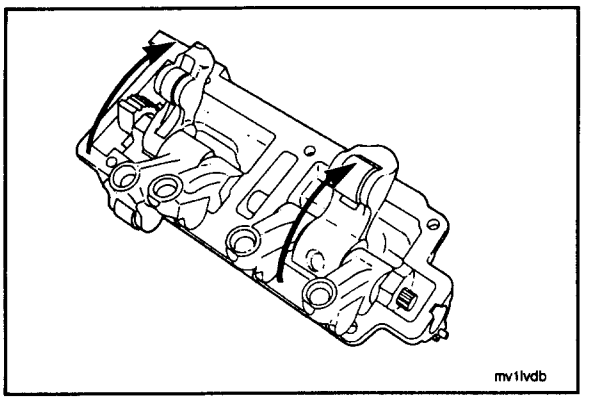

f. Make sure the follower levers move freely on the shaft.

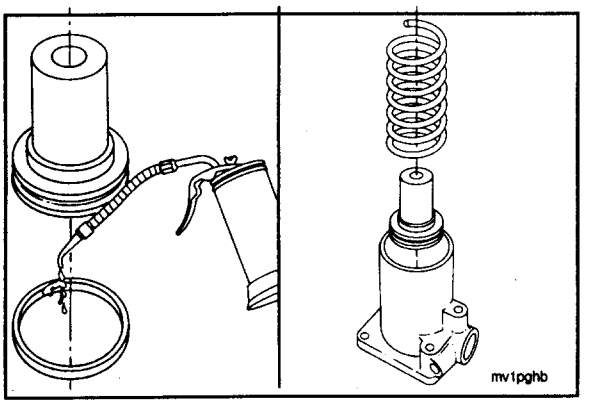

Actuator Housing

1. Use vegetable oil to lubricate the new actuator plunger rectangular sealing ring.
2. Install the rectangular sealing ring on the actuator plunger.
3. Install the plunger in the actuator housing.
4. Install the actuator spring in the housing.

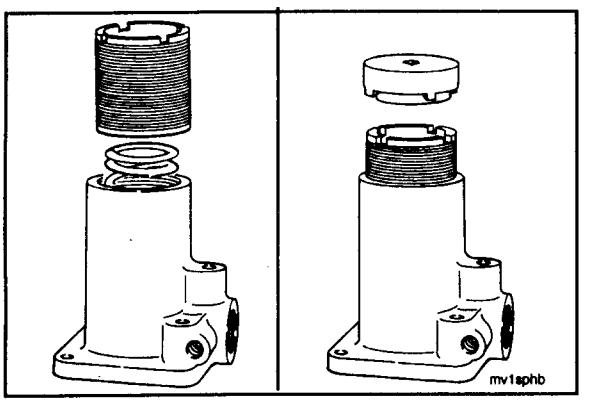

5. With the notched end up, install the spring retainer in the housing as follows:
   a. Some pressure will be required to start the threads of the retainer into the housing.
   b. Use Part No. 3376021 Actuator Adjusting Tool to install the retainer.
   c. Turn the retainer until the top edge of the retainer is 25.4 mm [1.00 inch] above the top of the housing.

NOTE: Use Part No. 3375522 Injection Timing Fixture to make the final timing adjustment after the actuator and the cam follower assemblies have been installed on the engine.

6. Use vegetable oil to lubricate the shaft guide rectangular sealing ring.
7. Install the sealing ring into the shaft guide counterbore.

NOTE: Make sure the lip of the sealing ring is toward the plunger.

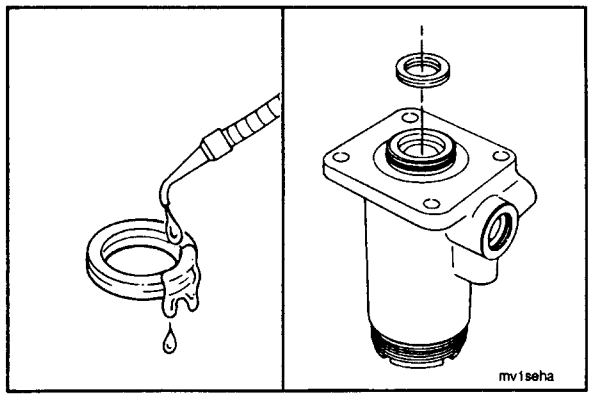

8. Install the actuator shaft as follows:
   a. Lubricate the plunger bore O-ring with vegetable oil.
   b. Install the O-ring in the groove in the inside diameter of the plunger.
   c. Install the shaft, threaded end first, through the sealing ring and the shaft guide into the plunger bore.
   d. Make sure the shaft goes all the way into the plunger bore.

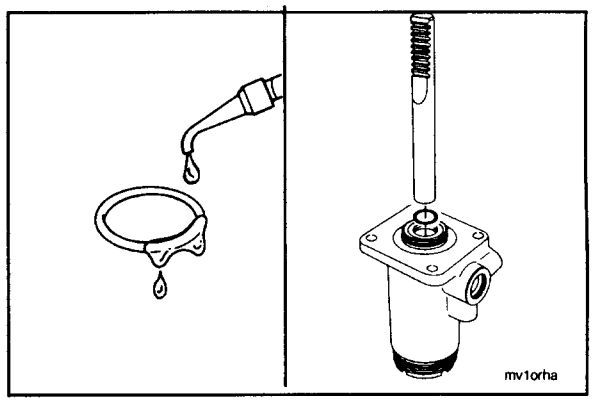

9. Install the spacer and the retaining capscrew.

NOTE: Do **not** tighten the capscrew.

10. Lubricate the solenoid valve bore sealing ring with vegetable oil.
11. Install the new sealing ring in the solenoid valve bore.

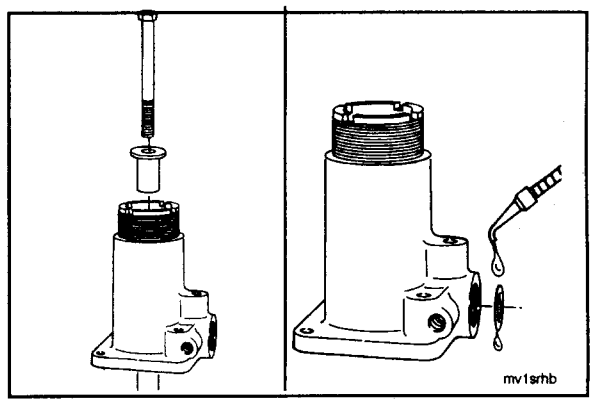

12. Install the plunger and the spring into the plunger bore of the solenoid stem.
13. Install the plunger, the spring, and the stem assembly into the solenoid valve bore of the actuator housing.
14. Use Part No. 3376023 Solenoid Stem Installation/Removal Tool to tighten the stem to 20 N•m (15 ft-lbs] torque.

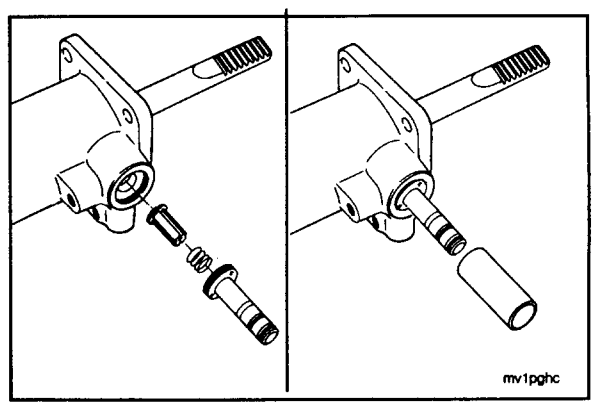

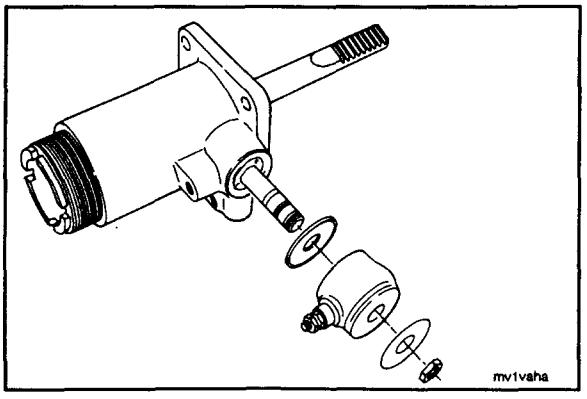

15. Install the solenoid valve as follows:
    a. Install the solenoid end plate.
    b. Install the solenoid body.
    c. Install the solenoid dataplate.
    d. Install the jam nut.

NOTE: Make sure the electrical connections are toward the top of the actuator.

    e. Tighten the jam nut to 5 N•m [45 in-lbs] torque.

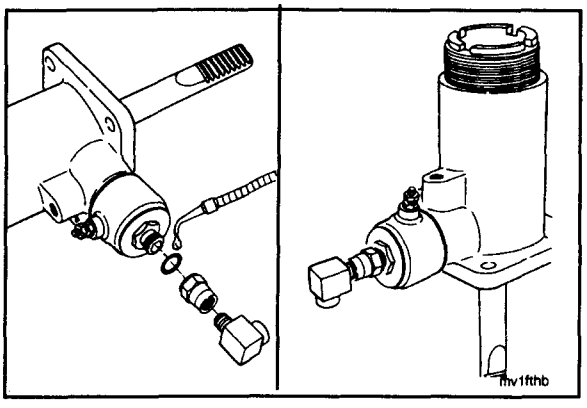

16. Use vegetable oil to lubricate the O-ring, and install the O-ring on the solenoid stem.
17. Install the air filter adapter. Tighten the adapter to 3 N•m [25 in-lbs] torque.
18. Install the air filter elbow. Tighten the elbow to 3 N•m [25 in-lbs] torque.

NOTE: The elbow **must** point straight down after it is installed.

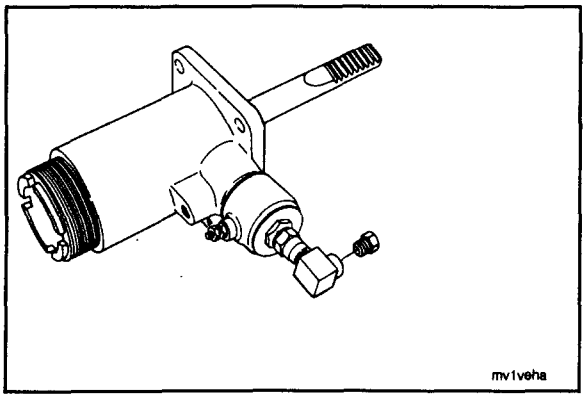

19. Install the air filter. Tighten the air filter to 3 N•m [25 in-lbs] torque.

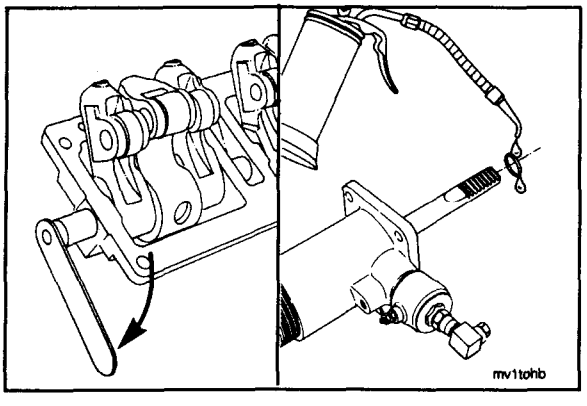

Actuator to Cam Follower Housing

1. Use Part No. 3376027 Cam Follower Shaft Positioning Tool to rotate the shaft **clockwise** as far as possible.
2. Use vegetable oil to lubricate the actuator shaft O-ring. Install the O-ring.

3. Install the actuator shaft through the guide bore in the housing.

NOTE: If the actuator shaft teeth do **not** engage the gear, use Part No. 3376027 Positioning Tool to rotate the cam follower shaft until the teeth engage.

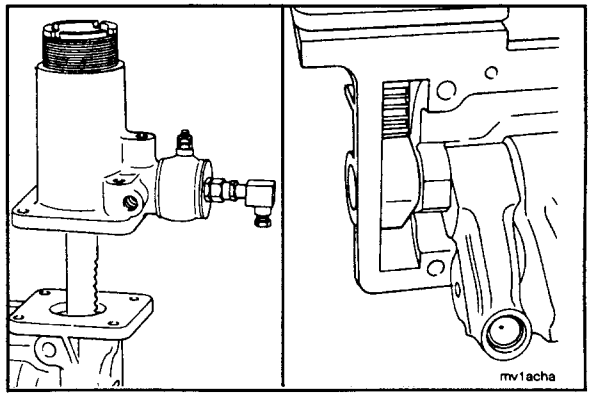

4. Install four capscrews and lock washers.

NOTE: Install the capscrew with the cross-drilled head into the hole farthest from the gasket surface of the cam follower housing.

5. Tighten the capscrews to 25 N•m [20 ft-lbs] torque.

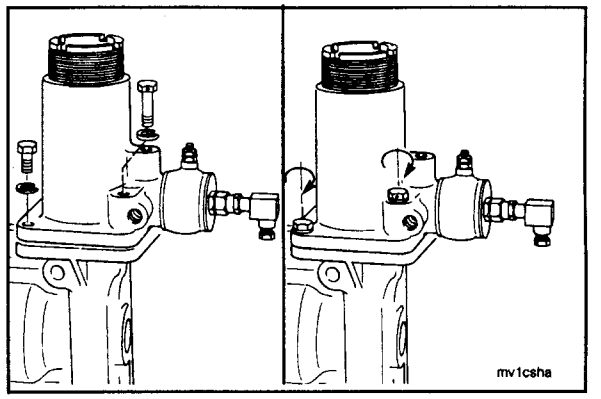

6. Tighten the actuator shaft retaining capscrew to 60 N•m [45 ft-lbs] torque.
7. Tighten the spring retainer as follows:
   a. Rotate the spring retainer with Part No. 3376021 Actuator Retainer Adjusting Tool until it extends the distance recorded before removal.
   b. Align the scribe marks on the spring retainer and the actuator housing.

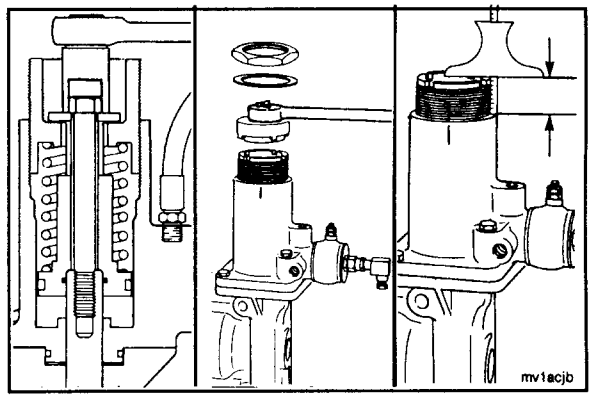

8. Install the washer and the lock nut on the spring retainer as follows:
   a. Use Part No. 3376021 Actuator Retainer Adjusting Tool to hold the spring retainer in position with the scribe marks aligned.
   b. Tighten the lock nut to 45 N•m [35 ft-lbs] torque.

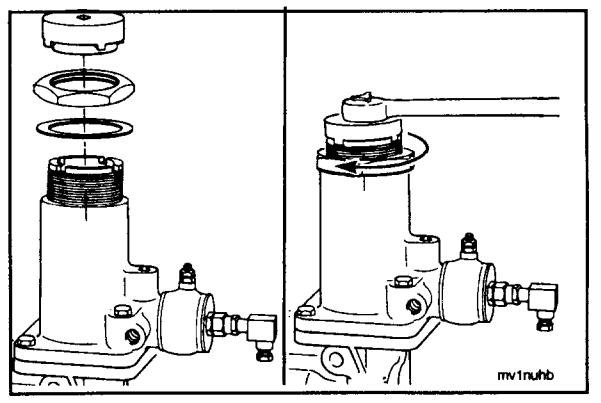

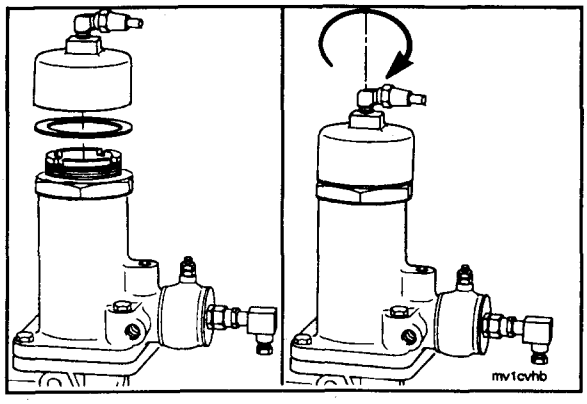

9. Install the second washer and the actuator cap.
10. Tighten the actuator cap to 40 N•m [30 ft-lbs] torque.

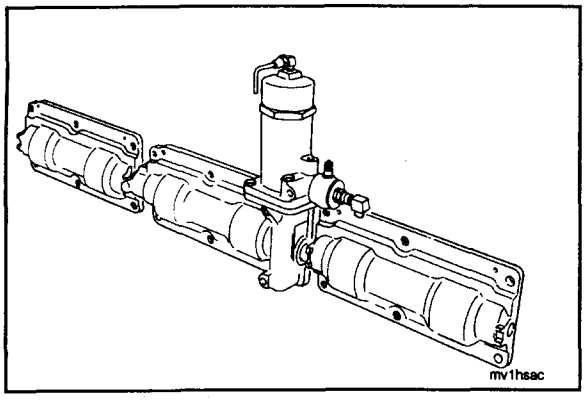

Install

NOTE: The three housings of the MVT cam followers **must** be installed to the engine as an assembly.

1. Assemble the front and the rear housing assemblies to the center housing assembly as follows:

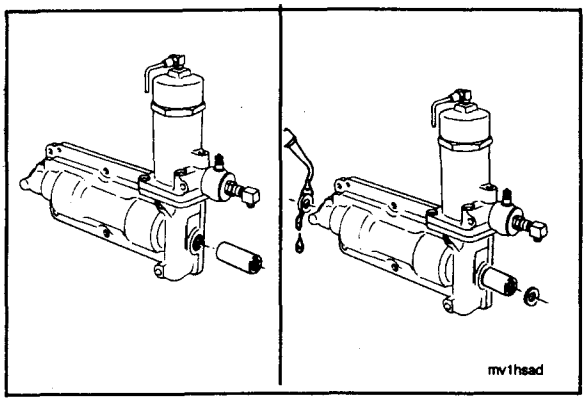

a. Install the splined coupling on the shaft in the front of the center housing.

b. Use vegetable oil to lubricate the rectangular sealing rings. Install a rectangular sealing ring in each end of the center housing.

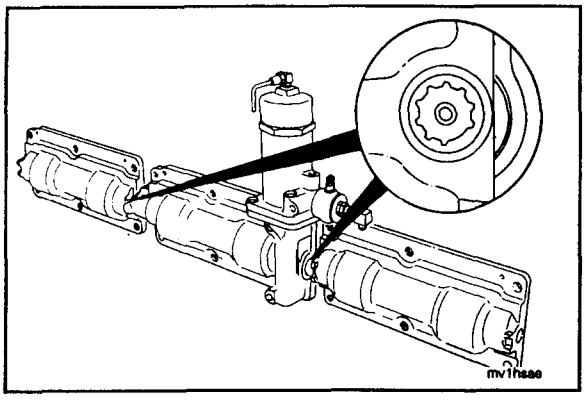

c. Align the splines on the shafts in both the front and the rear housings with the splines in the center housing.

NOTE: Use Part No. 3376027 Shaft Positioning Tool to align the shaft splines.

d. Install the shaft of the housing into the splined coupling as follows:

(1) Align the roll pin in the center housing with the slot in the front housing.

(2) Push the shaft into the coupling until the housing is against the rectangular seal.

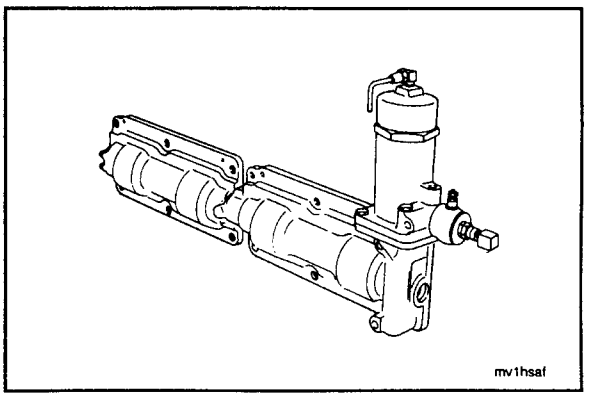

e. Install the shaft of the rear housing into the actuator gear in the center housing as follows:

(1) Align the roll pin in the center housing with the slot in the rear housing.

(2) Push the shaft into the gear until the housing is against the rectangular seal.

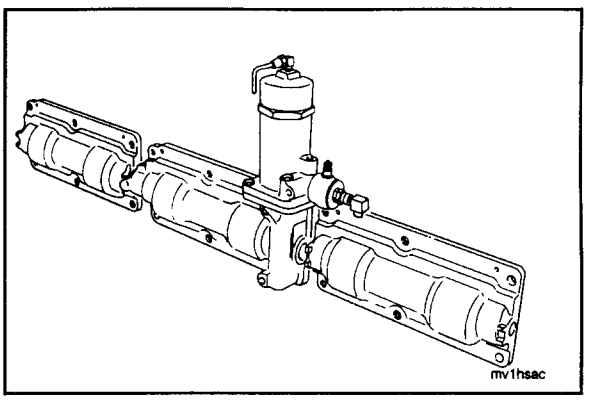

2. Install Part No. 3376028 Variable Timing Fixture and Part No. 3376209 Bracket to the cam follower assemblies.

NOTE: The cam follower assembly installation tools hold the housings in alignment and the cam follower levers in an upward position.

3. Make sure the rectangular sealing rings are in the correct position.

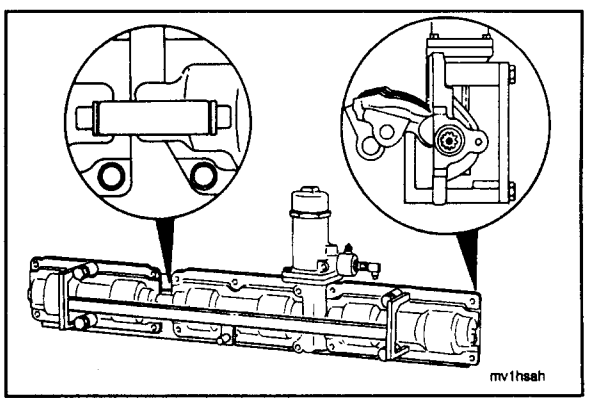

4. Install three guide studs into the capscrew holes in the block.

NOTE: Install the guide studs to align with the top right hand capscrew hole in each cam follower housing.

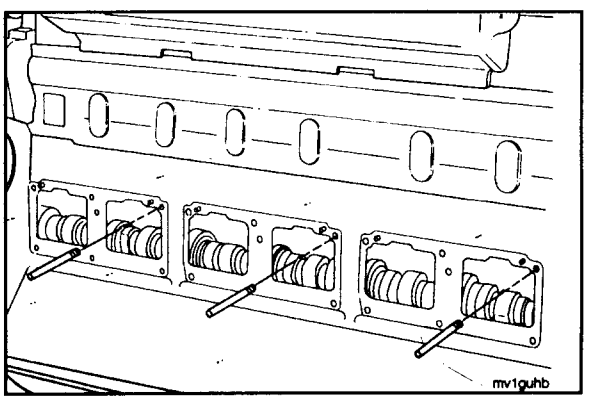

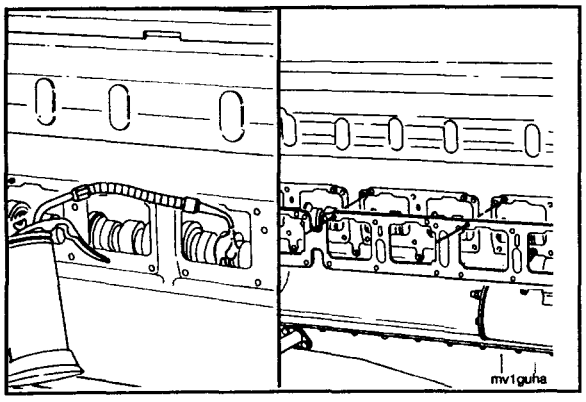

5. Use clean 15W-40 oil to lubricate the camshaft lobes.
6. Install a new gasket on the guide studs and the dowels.

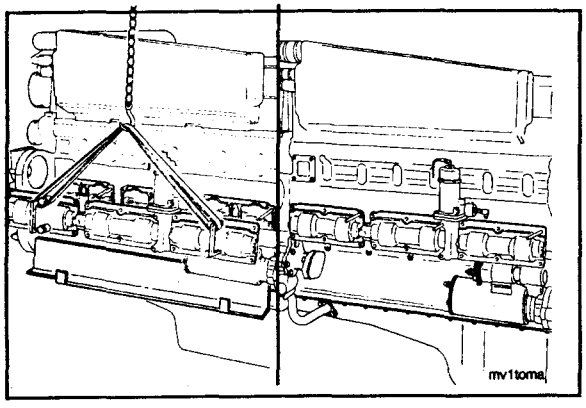

Warning: Because this assembly weighs more than 23 kg [50 lbs], two people or a hoist will be required to lift the cam follower and actuator assembly to avoid personal injury.

7. Install the cam follower and actuator assembly on the guide studs.
8. Remove Part No. 3376028 Variable Timing Fixture and Part No. 3376209 Bracket from the MVT assembly.

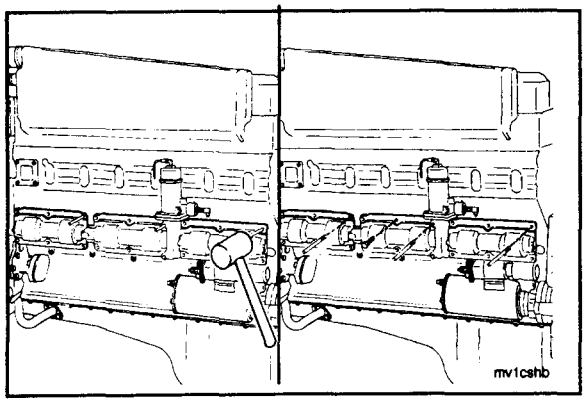

9. Use a plastic hammer to install the housings on the dowel pins.
10. Install one capscrew in the center housing to hold the assembly in place.
11. Remove the guide studs.

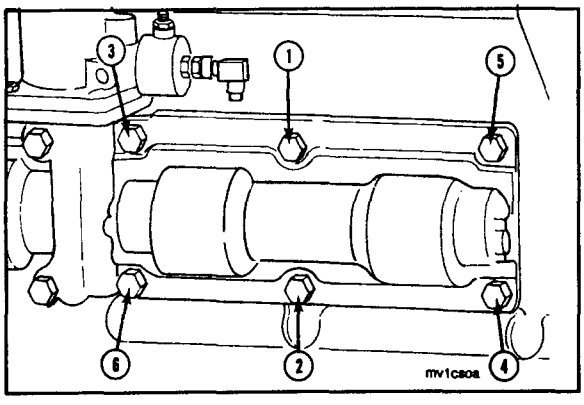

12. Install the capscrews. Tighten the capscrews in the sequence shown to the following torque values:
    a. Tighten to 20 N•m [15 ft-lbs] torque.
    b. Tighten to 45 N•m [35 ft-lbs] torque.

NOTE: Tighten the center cam follower housing first.

13. Check the injection timing. Refer to Procedure 7-16.
14. Install the solenoid wiring harness.
15. Install the air supply and the vent tubes.

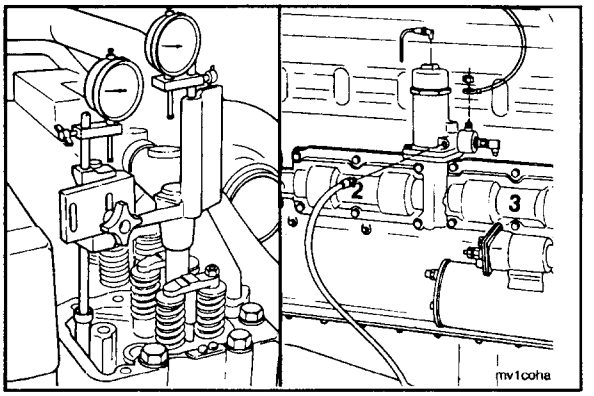

16. Install the accessory drive assembly. Refer to Procedure 7-28.
17. Install the air compressor (if used). Refer to Procedure 4-12.
18. Install the fuel pump. Refer to Procedure 5-07.

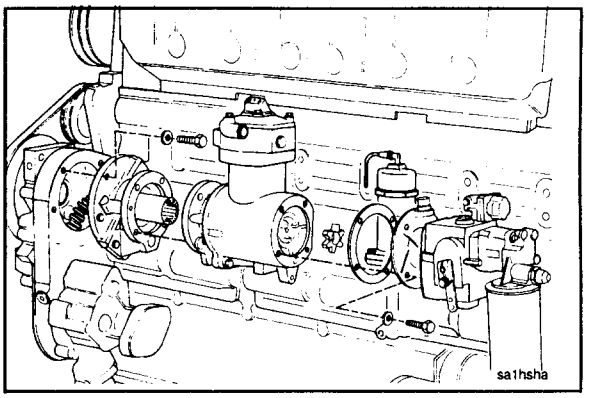

19. Install the push rods. Refer to Procedure 7-08.
20. Install the rocker lever housings. Refer to Procedure 7-09.

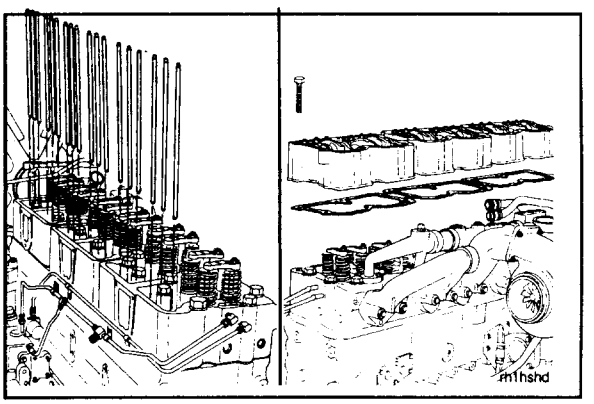

21. Adjust the valves and injectors. Refer to Procedure 7-04.
22. Install the rocker housing covers. Refer to Procedure 7-02.

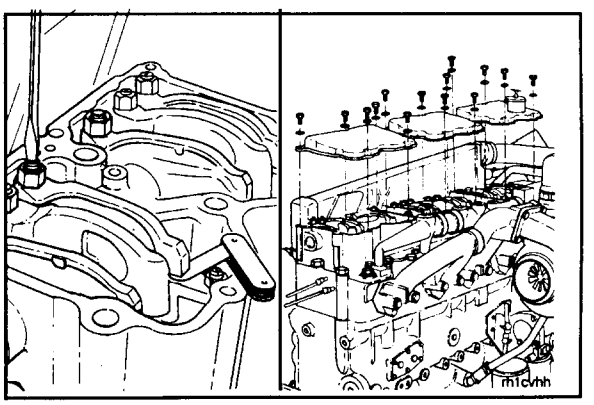

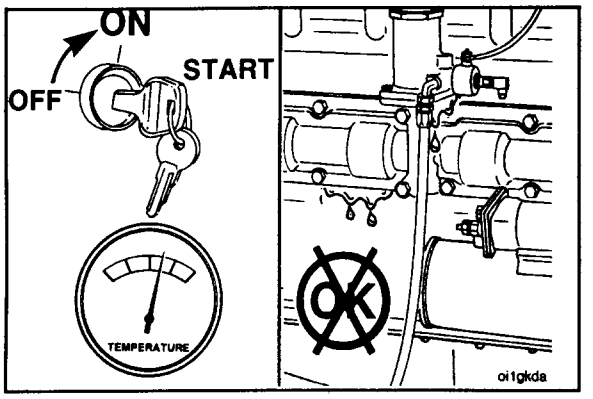

23. Operate the engine until it reaches a temperature of 80°C [180°F], and check for engine operation and lubricating oil or air leaks.

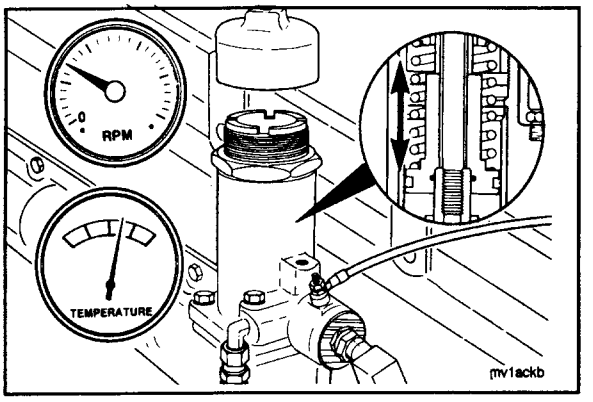

24. Check the actuator for free movement as follows:
    a. Operate the engine at idle speed.
    b. Cycle the actuator by connecting and disconnecting the power supply to the solenoid. Refer to Procedure 7-14.
    c. Cycle the actuator several times to make sure the actuator moves freely.

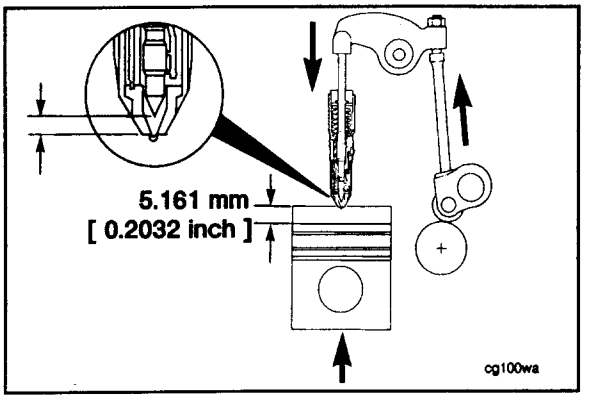

Injection Timing (General Information) - (7-16)

The injection timing is the relative measurement of the distance remaining between the injector plunger and the injector cup when the piston is 5.161 mm [0.2032-inch], or 19 degrees before "TDC" (top dead center) on the compression stroke.

Injector timing is expressed by the amount of push tube travel remaining.

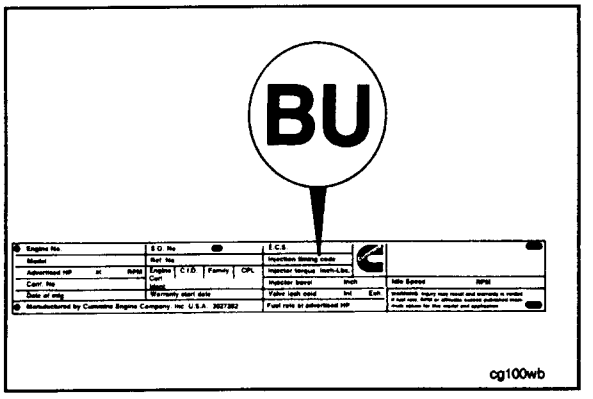

The injection timing code appears on the engine dataplate. Codes are alphabetic letters that relate to a numerical specification.

Specifications can be found in the "Control Parts List (CPL) Manual," Bulletin No. 3379133.

Advanced timing (1) means the fuel is injected earlier into the cylinder during the compression stroke. **Retarded** timing (2) means the fuel injection occurs closer to "TDC" in the cylinder.

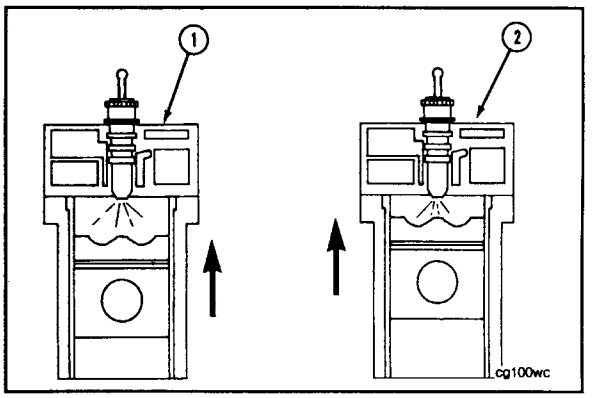

The amount of push rod travel determines the time of fuel injection in relation to the piston position.

A **low** numerical value of the push rod travel remaining indicates a greater degree of advanced (1) or fast timing.

A **high** numerical value of the push rod travel remaining indicates a greater degree of retarded (2) or slow timing.

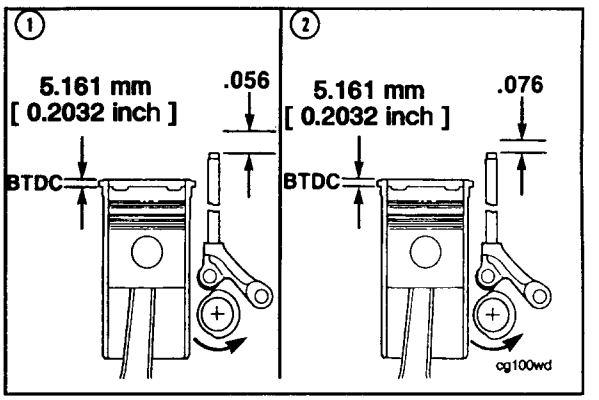

Injection timing changes are accomplished by **advancing** (1) or **retarding** (2) the cam follower action in relation to the piston position.

This is accomplished by changing the orientation of the camshaft lobe to the cam follower using different cam follower gasket thicknesses or offset camshaft gear keys.

NOTE: Gear train timing (index mark alignment) **always** remains the same.

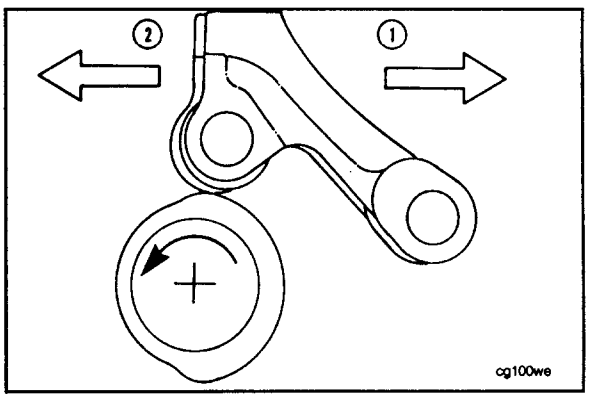

Injection Timing (Fixed) - (7-17)

NOTE: The injection timing check is a measurement which determines the injector push rod travel in relation to the piston travel. Due to normal parts tolerances, it is necessary to check one cylinder for each cam follower housing.

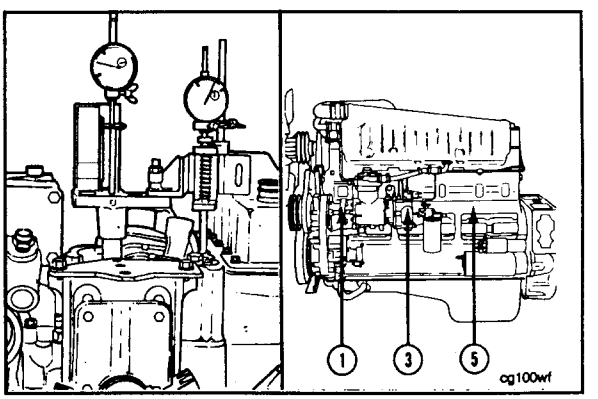

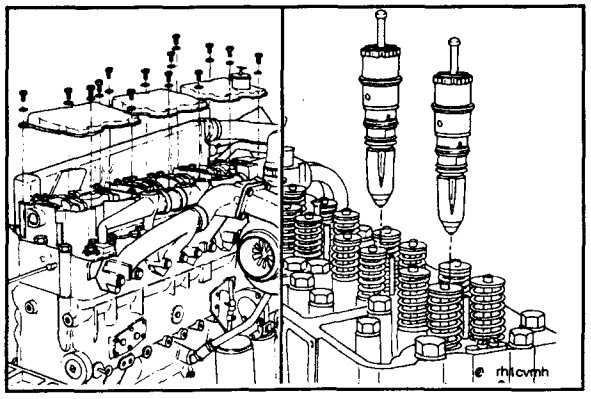

Install The Timing Tool

1. Remove the rocker housing covers. Refer to Procedure 7-02.
2. Remove the injectors from cylinders No. 1, No. 3, and No. 5. Refer to Procedure 5-06.

NOTE: It is **not** necessary to remove all of the injectors; however, engine rotation will be easier with all of the injectors removed.

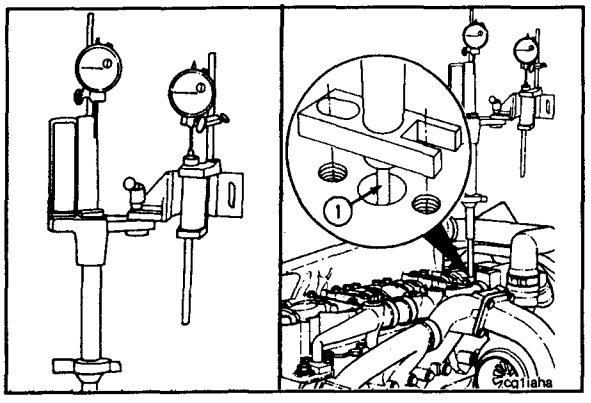

NOTE: Part No. 3375522 Injector Timing Tool can be installed without removing the rocker levers.

Caution: Pivot the dial indicator stems away from their respective plunger rods before installing the timing fixture to prevent damage to the indicators.

3. Install the piston plunger rod (1) in the injector bore of the No. 1 cylinder.

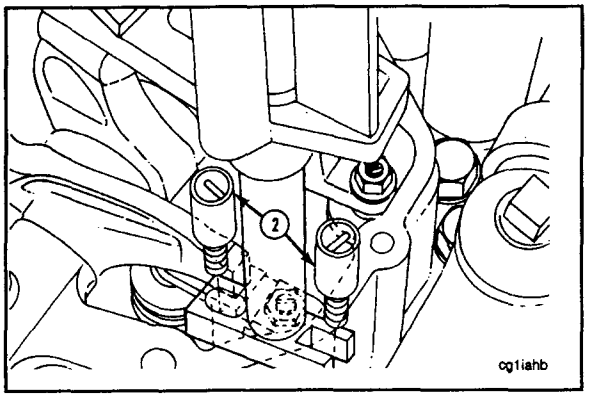

4. Install the threaded adapters (2) through the mounting foot into the injector hold-down capscrew holes.

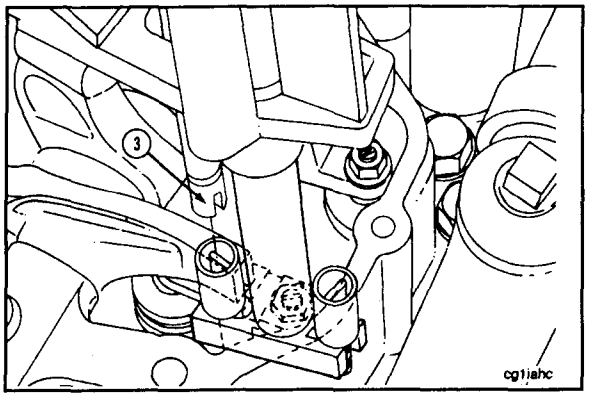

5. Use the tightening rod (3) to tighten the threaded adapters.

NOTE: Tighten the threaded adapters enough to hold the timing tool rigid. The adapters can be damaged if they are tightened too tightly.

6. Align the push rod plunger rod (4) with the injector push rod (7).

NOTE: Tighten the clamp handle (5) after the plunger rod is aligned with the injector push rod.

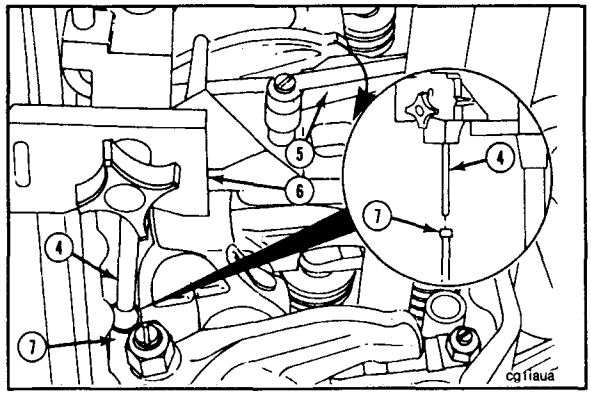

7. Loosen the support bracket (6), and slide the bracket down until the plunger rod (4) engages the injector push rod (7).

NOTE: The support bracket **must** be aligned with the vertical line on the clamp handle bracket. The push rod (7) **must** be vertically aligned with the plunger rod (4).

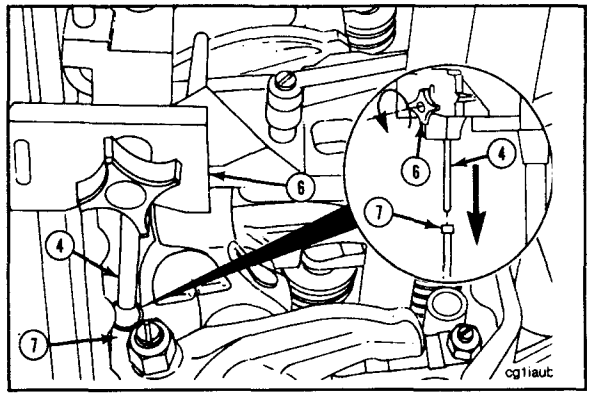

8. Compress the plunger rod tension spring approximately 12.7 mm [0.50-inch], and tighten the support bracket.

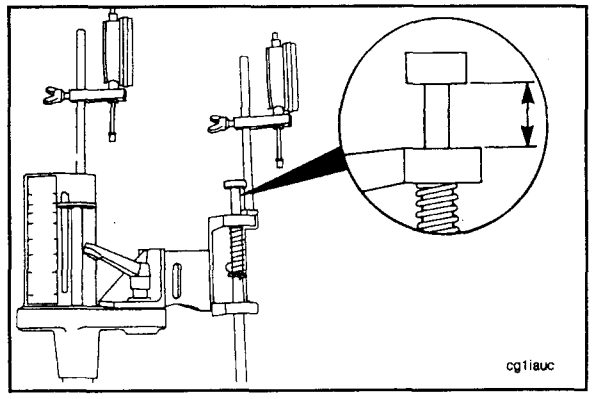

9. Determine the piston "TDC" (top dead center) on the compression stroke by rotating the crankshaft in the direction of engine rotation (**clockwise**) until the piston plunger reaches its uppermost position.

NOTE: Use **only** the crankshaft to rotate the engine. The use of the gears will result in false measurements. Gear lash **must** be closed up in the direction of normal rotation (crankshaft **clockwise**).

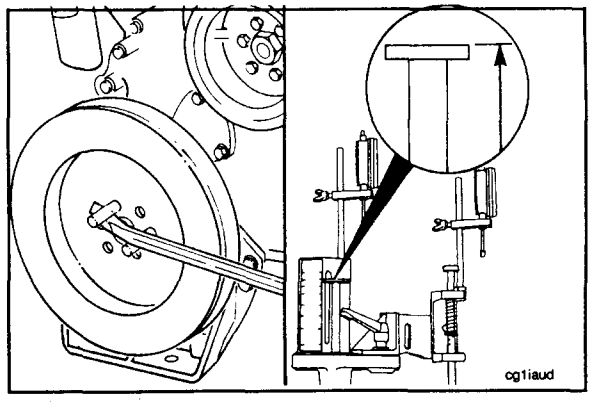

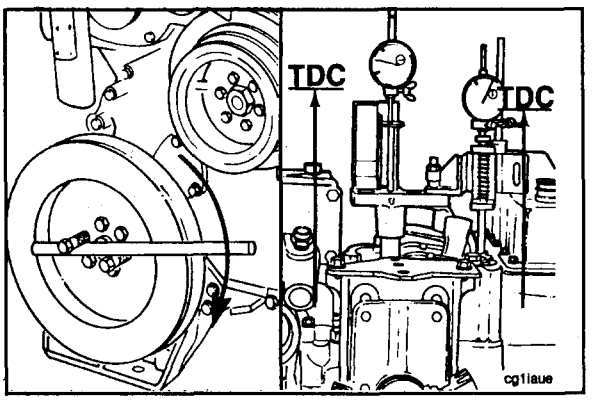

NOTE: The timing tool indicator plungers will both start moving upward at the same time if the cylinder is on the compression stroke. If both plungers do **not** move upward at the same time, rotate the engine one complete revolution.

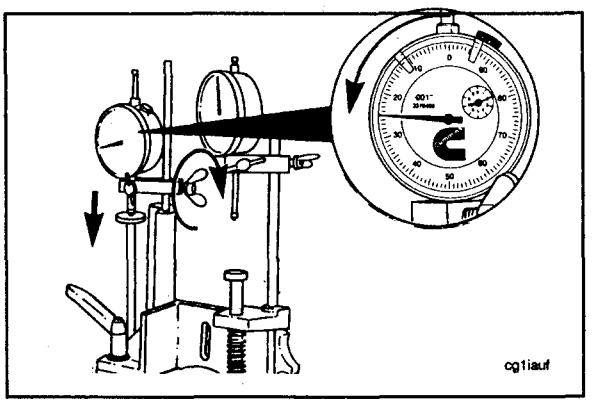

Caution: Both indicators must have a travel range of at least 6.35 mm [0.250-inch] or the indicators will be damaged.

10. Put the piston travel dial indicator over the plunger rod with the contact tip in the center of the piston plunger rod. Lower the indicator to within 0.63 mm [0.025-inch] of the fully compressed position.
11. Tighten the thumbscrew to hold the gauge in position.

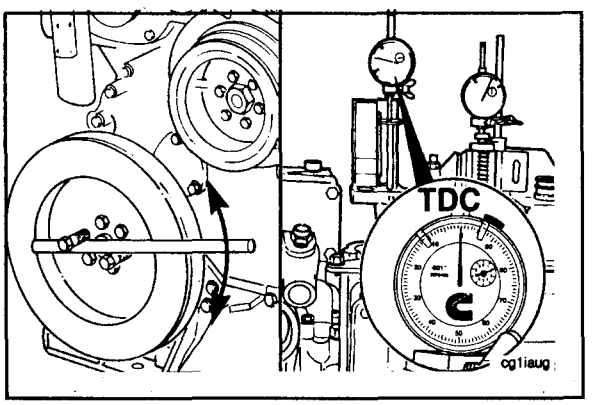

12. Rotate the crankshaft back and forth to make sure the piston is precisely at "TDC" (top dead center) on the compression stroke.

NOTE: **Always** set the dial indicator at "0" (zero) at "TDC" with the crankshaft having just been rotated in the direction of normal rotation **(clockwise)**.

NOTE: "TDC" is indicated by the maximum **clockwise** position of the piston travel indicator pointer.

13. Set the dial indicator at "0" (zero). Lock the indicator face with the thumbscrew.

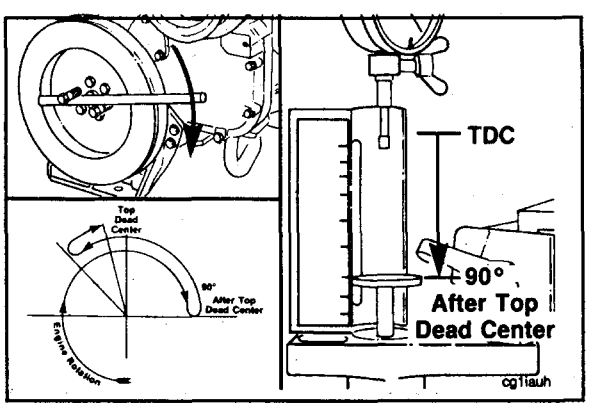

14. Rotate the crankshaft in the direction of engine rotation **(clockwise)** to 90 degrees "ATDC" (after top dead center).

NOTE: The piston travel plunger will be at the "NH/NT 90-degree" mark on the timing tool.

15. Put the push rod travel dial indicator in the center of the injector push rod plunger. Lower the indicator to within 0.63 mm [0.025-inch] of fully compressed position, and tighten the thumbscrew to hold the indicator in position.

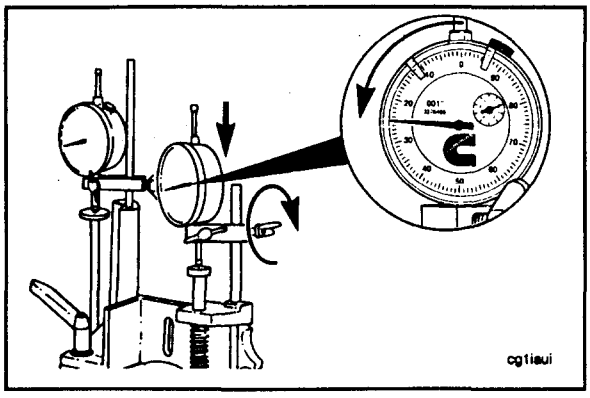

16. Set the dial indicator at "0" (zero). Lock the indicator face with the thumbscrew.

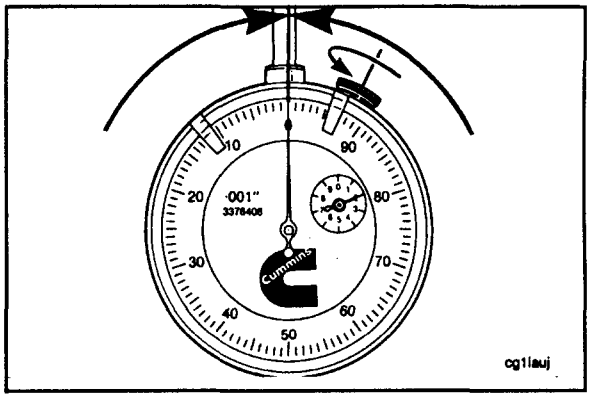

17. Rotate the crankshaft in the **opposite** direction of engine rotation (**counterclockwise**) through "TDC" to 45 degrees "BTDC" (before top dead center).

NOTE: This step is necessary to remove the gear train lash and to provide more accurate indicator readings.

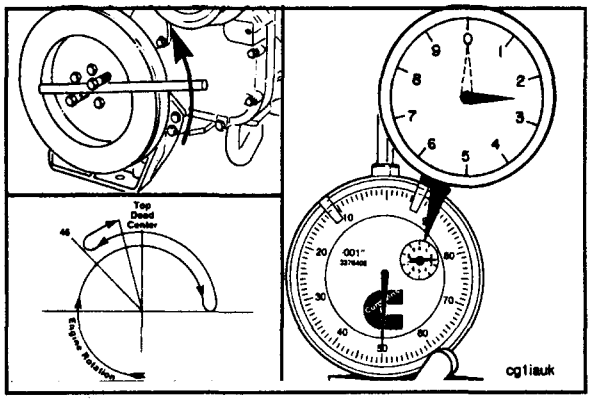

NOTE: If the crankshaft is rotated beyond the -5.161 mm [-0.2032-inch] position, the crankshaft **must** be rotated **counterclockwise** back to 45 degrees "BTDC". Repeat step No. 18 below.

18. Rotate the crankshaft slowly in the direction of engine rotation (**clockwise**) until a reading of -5.161 mm [-0.2032-inch] "BTDC" is reached on the piston travel dial indicator.

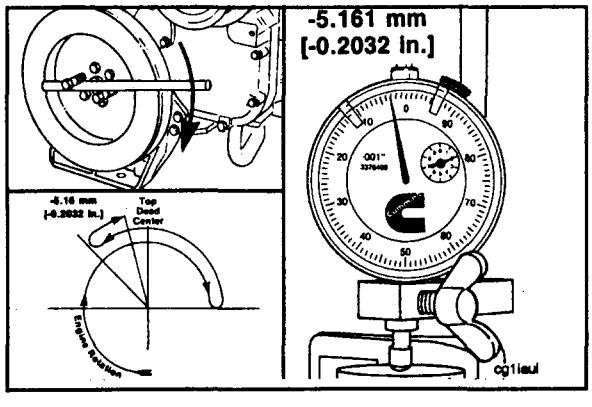

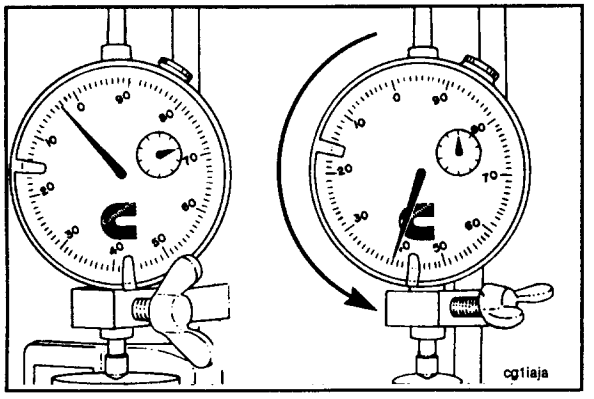

19. Compare the reading of the injector push rod travel indicator to the specification listed for the timing code.

NOTE: The push rod travel indicator is read in a **counter-clockwise** direction from "0" (zero). The total amount of travel represents the injection timing value.

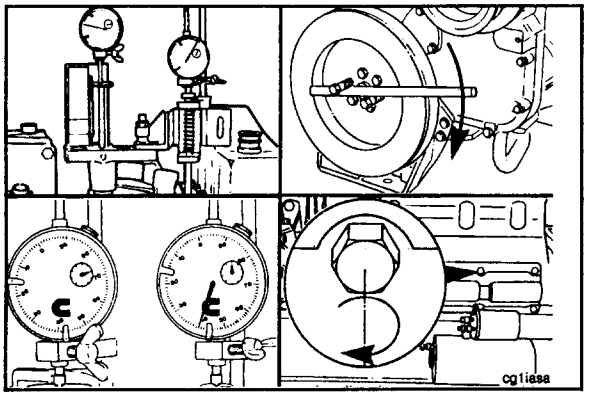

20. If the injection timing is **not** within the specified limits, check the following:
    a. Is the timing tool correctly installed?
    b. Are the gauges correctly adjusted?
    c. Has the crankshaft been rotated in the correct direction?
    d. Are the cam follower housing capscrews correctly tightened? Refer to Procedure 7-13.

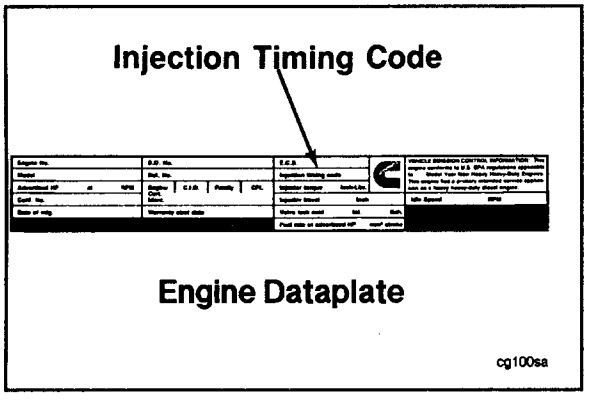

NOTE: To verify the correct injection timing for a particular engine, check the injection timing code on the engine dataplate. To acquire the timing specifications, refer to the "Control Parts List (CPL) Manual," Bulletin No. 3379133.

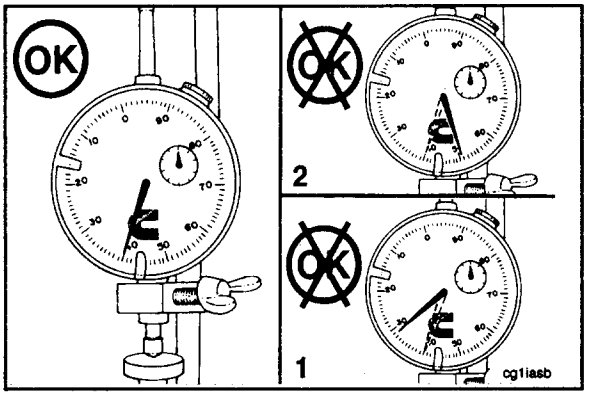

21. If the indicator reading is higher than the specification, the timing is retarded (2).
22. If the indicator reading is lower than the specification, the timing is advanced (1).

NOTE: The injection timing can be changed by removing the cam follower housing and by increasing or decreasing the gasket thickness. Each 0.18 mm [0.007-inch] of gasket thickness affects injection timing by approximately 0.05 mm [0.002-inch] indicator travel.

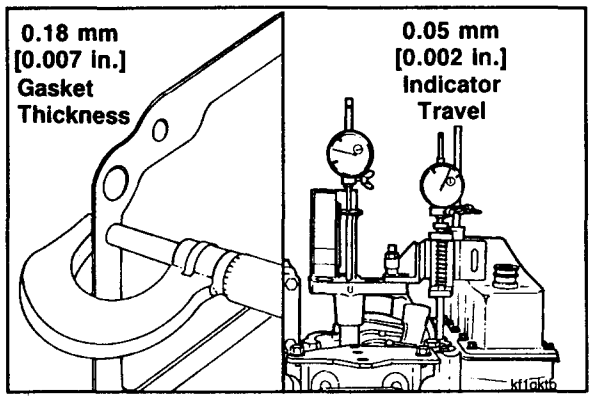

NOTE: Gaskets are available in the following nominal thicknesses:

a. 0.18 mm [0.007-inch].

b. 0.43 mm [0.017-inch].

c. 0.43 mm [0.017-inch] (Print-O-Seal*).

d. 0.56 mm [0.022-inch].

e. 0.76 mm [0.030-inch].

* One Print-O-Seal gasket **must** be used for each cam follower housing.

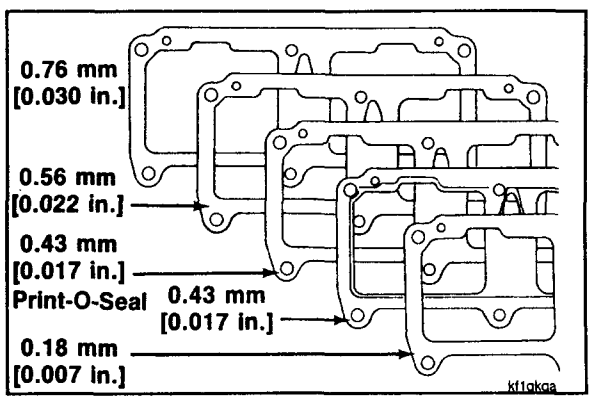

23. **Increase** the gasket thickness to **advance** the injection timing.

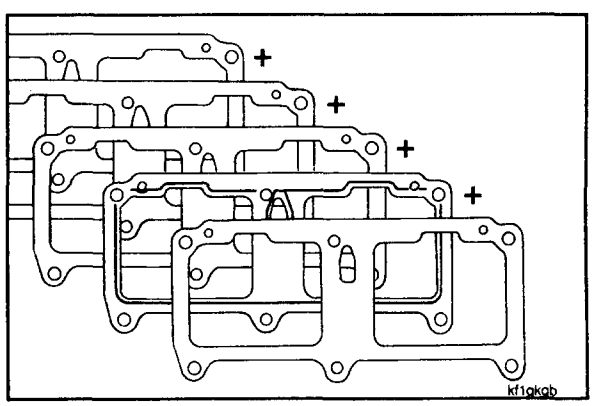

24. **Decrease** the gasket thickness to **retard** the injection timing.

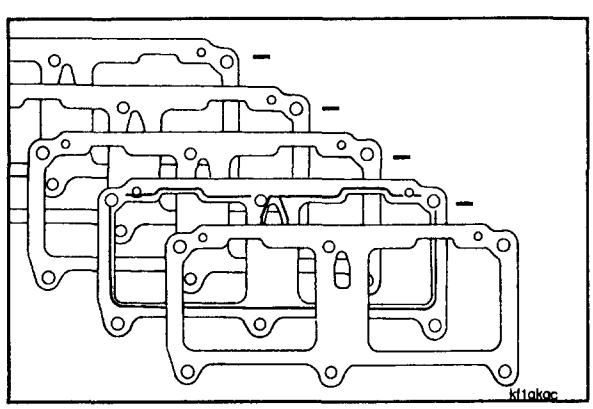

Cam Follower Housing Gaskets

Gasket Part No.	Thickness [mm] Inch	Change In Push Rod Travel At 19° BTDC [mm] Inch
3020000 (Print-O-Seal)	0.36 to 0.51 [0.014 to 0.020]	0.09 to 0.13 [0.0035 to 0.005]
3020001	0.15 to 0.20 [0.006 to 0.008]	0.04 to 0.05 [0.0015 to 0.002]
3020002	0.36 to 0.51 [0.014 to 0.020]	0.09 to 0.13 [0.0035 to 0.005]
3020003	0.51 to 0.61 [0.020 to 0.024]	0.13 to 0.15 [0.005 to 0.006]
3020004	0.69 to 0.84 [0.027 to 0.033]	0.18 to 0.20 [0.007 to 0.008]

25. The accompanying chart lists the different cam follower housing gaskets, the gasket thickness, and approximate change in push tube travel at 19 degrees BTDC (0.2032-inch piston travel).

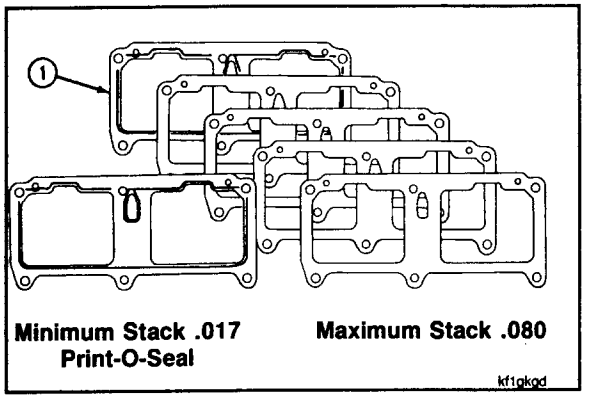

NOTE: The Print-O-Seal gasket (1) **must** be against the cylinder block with the sealing bead toward the cam follower housing. The minimum amount of gasket stack-up thickness which may be used is 0.43 mm [0.017-inch] (one Print-O-Seal gasket). The maximum gasket stack-up thickness allowed is 2.03 mm [0.080-inch].

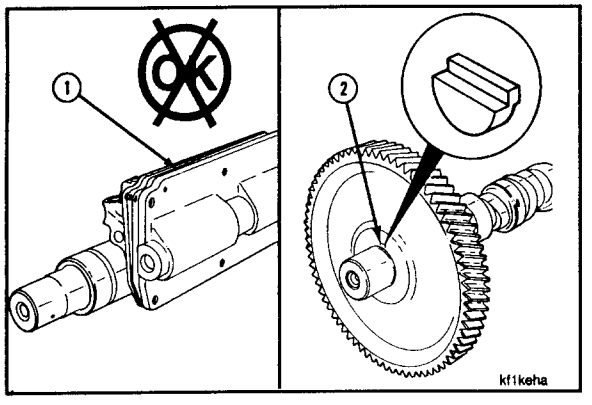

26. If you can **not** correct the injection timing by increasing or decreasing the thickness of the cam follower housing gaskets (1), an offset camshaft key (2) **must** be installed. Refer to Procedure 7-37.

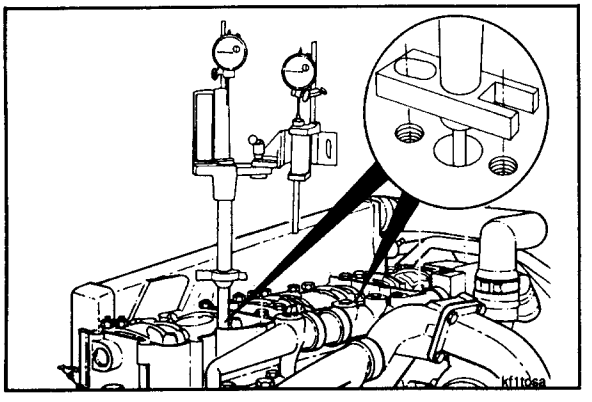

27. After completing the injection timing check on cylinder No. 1, check the injection timing on cylinders No. 3 and No. 5.

28. Install the injectors. Refer to Procedure 5-06.
29. Install the rocker housing covers. Refer to Procedure 7-02.

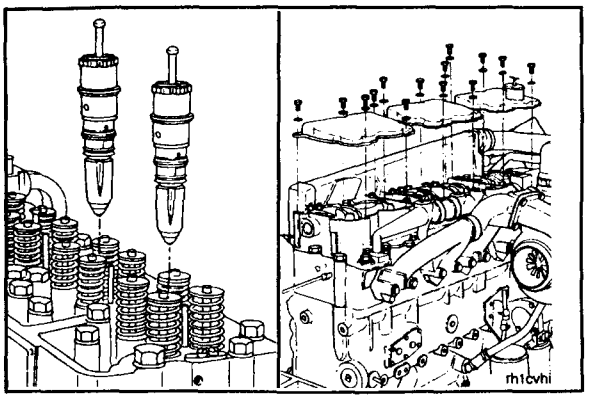

Injection Timing (MVT) - (7-18)

NOTE: The Mechanical Variable Timing (MVT) actuator is a two-position injection timing control that is either fully advanced or fully retarded when it is in operation. The MVT system **must** be in the fully **retarded mode** to set the injection timing.

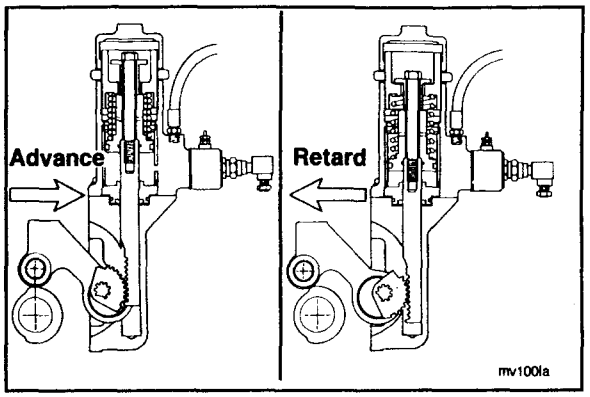

1. Put the MVT actuator in the retarded mode as follows:
   a. Remove the electrical wire at the MVT air solenoid valve.
   b. Start and operate the engine at low idle speed for a minimum of 30 seconds.

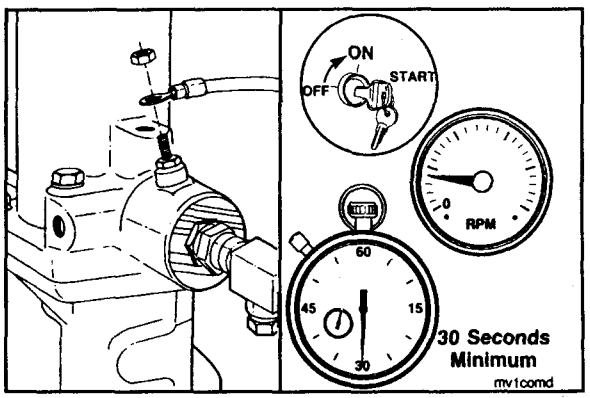

NOTE: If the engine can **not** be operated prior to adjusting the valves and the injectors, put the MVT actuator in the retarded mode as follows:

a. Remove the actuator cap.
b. Check the position of the actuator plunger (1). The plunger **must** be all the way down in the housing.

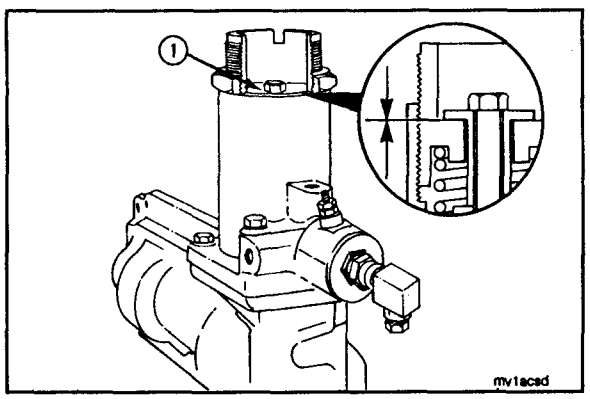

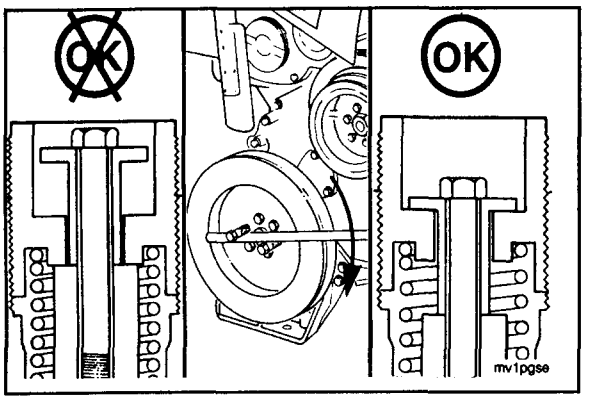

c. If the plunger is **not** all the way down in the housing, rotate the crankshaft two complete revolutions in the direction of engine rotation **(clockwise)**.

d. Check the position of the actuator plunger.

e. Lightly tap the spacer capscrew with a plastic hammer to make sure the MVT system is in the fully retarded mode.

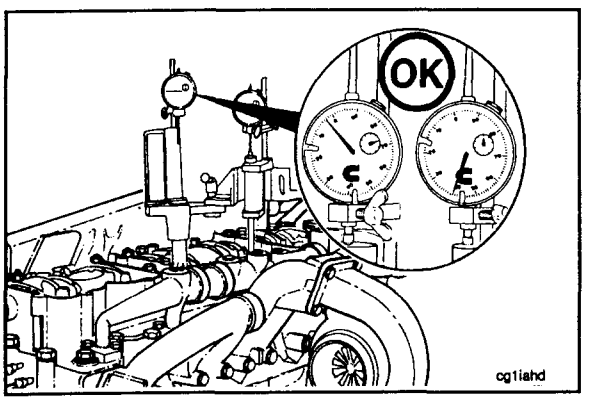

2. Install Part No. 3375522 Injection Timing Tool in cylinder No. 3. Refer to Procedure 7-17.

NOTE: Follow steps No. 1 through No. 22 under "Injection Timing (Fixed)" when checking the retarded injection timing. Refer to Procedure 7-17.

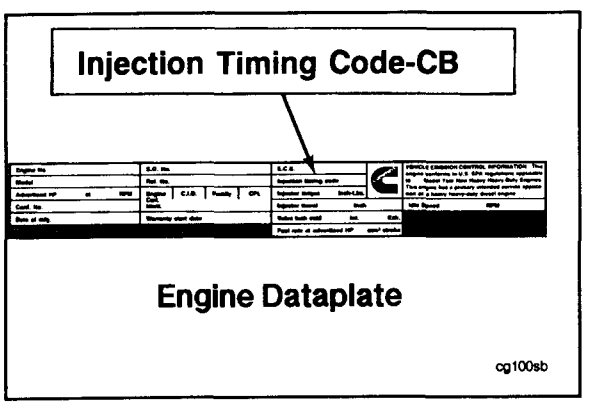

3. Compare the reading of the injector push rod travel indicator to the specifications listed for the timing code on the engine dataplate.

4. If the retarded injection timing is **not** within the specified limits, adjust the timing as follows:

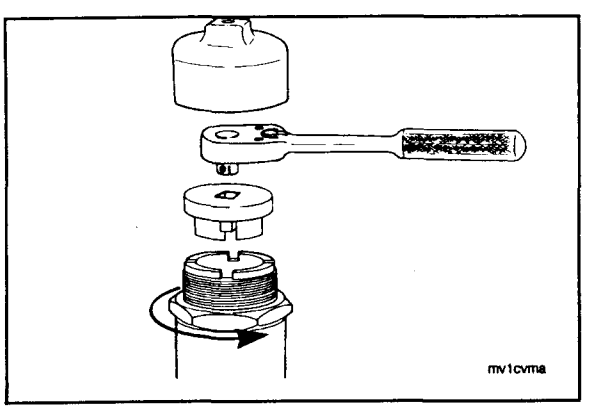

a. Remove the actuator cap.

b. Loosen the spring retainer lock nut.

NOTE: When adjusting the retarded injection timing, check to make sure the timing can be retarded at least 0.08 mm to 0.20 mm [0.003-inch to 0.008-inch] beyond the nominal timing specification with the MVT spring retainer. Perform this check to make sure the correct camshaft key has been installed in the camshaft.

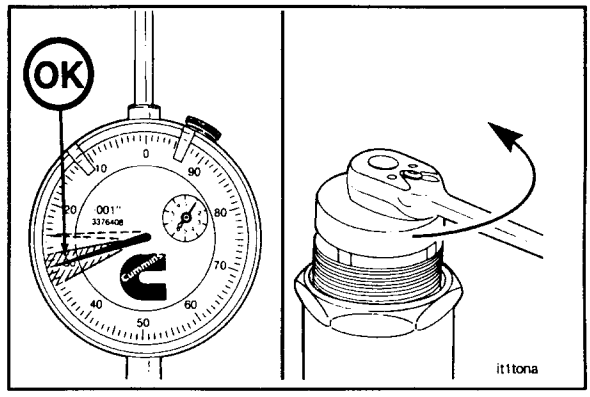

c. With the timing tool installed correctly (refer to Procedure 7-17) and the piston at -5.161 mm [-0.2032-inch] "BTDC," rotate the MVT spring retainer **clockwise** with Part No. 3376021 Retainer Adjusting Tool until the needle on the indicator above the injector push tube stops moving **counterclockwise**. The MVT is now at the maximum retarded timing position.

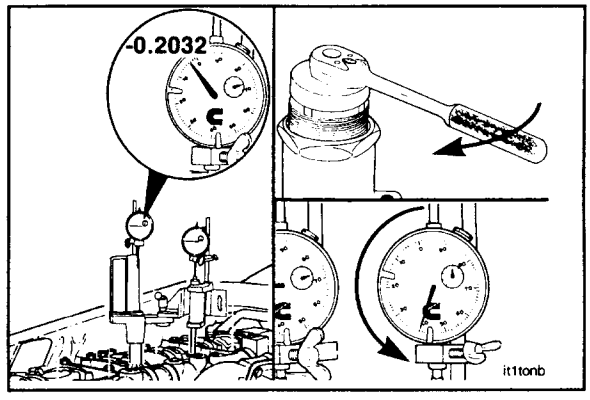

d. Check the dial indicator reading above the injector push tube. The reading **must** be at least 0.08 mm to 0.20 mm [0.003-inch to 0.008-inch] higher than the nominal retarded injection timing specification.

Example:

- Nominal timing specification (push rod travel) with the piston at -5.161 mm [-0.2032-inch].
- Dial indicator reading (push rod travel) with the MVT at the maximum retarded position (3.150 mm to 3.277 mm [0.124-inch to 0.129-inch]).

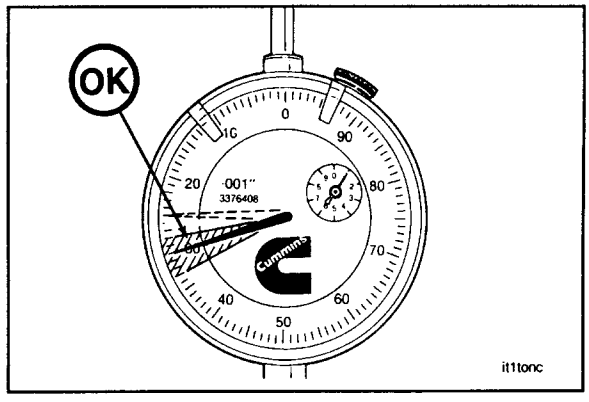

e. If the injection timing can **not** be retarded at least 0.08 mm to 0.20 mm [0.003-inch to 0.008-inch] beyond the nominal timing specification with the spring retainer, the timing **must** be retarded by changing the camshaft key to prevent damage to the MVT actuator shaft and gear. Refer to Procedure 7-37.

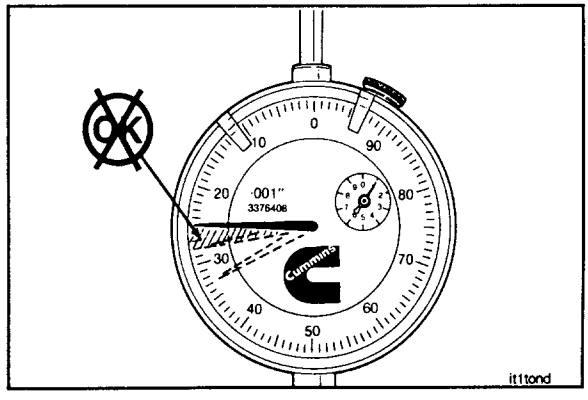

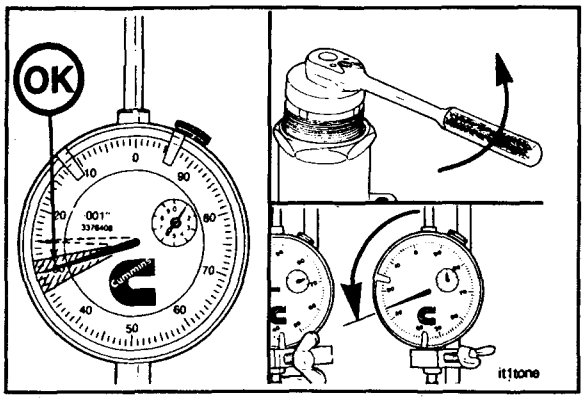

f. If the dial indicator reading is at least 0.08 mm to 0.20 mm [0.003-inch to 0.008-inch] above the nominal timing specification, make the final timing adjustment by rotating the spring retainer **counterclockwise** until the dial indicator reading is at the nominal timing specification.

NOTE: One complete revolution of the spring retainer will change the push rod travel approximately 0.10 mm [0.004-inch].

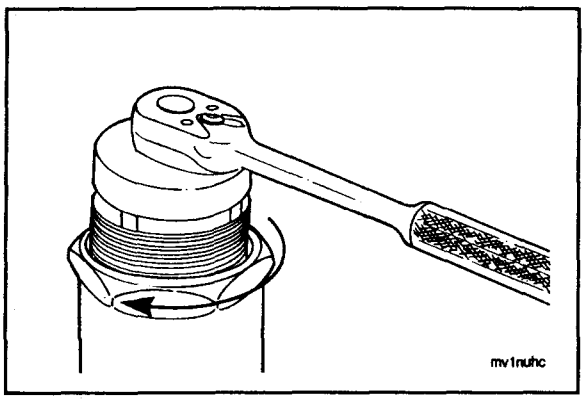

g. Hold the spring retainer in position, and tighten the lock nut to 45 N•m [35 ft-lbs] torque.

NOTE: The advanced injection timing is controlled by a spacer in the MVT actuator and will **not** require adjustment. However, checking the timing while the actuator is in the advanced mode will provide information on worn or damaged parts.

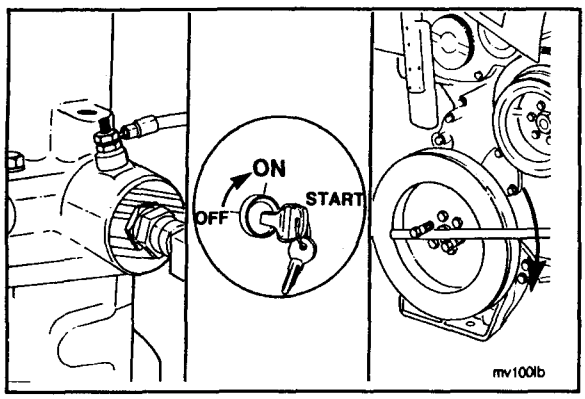

5. Check the advanced injection timing of the No. 3 cylinder as follows:

   a. Connect the electrical wire again at the MVT air solenoid valve.

NOTE: The ignition switch **must** be turned to the "ON" position to activate the electrical current.

   b. Rotate the crankshaft at least two complete revolutions in the direction of engine rotation **(clockwise)**.

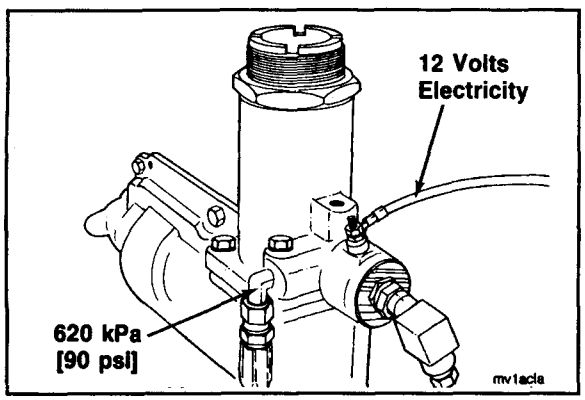

NOTE: There **must** be air pressure in the vehicle air supply tanks to activate the mechanism. If there is no air pressure in the supply tanks, the system can be advanced by applying shop air (greater than 620 kPa [90 psi]) to the air solenoid valve.

c. Check the position of the actuator plunger. The actuator plunger **must** move freely and be at the top of its travel (advanced position).

d. Compare the reading of the injector push rod travel indicator to the specifications listed for advanced timing for the timing code.

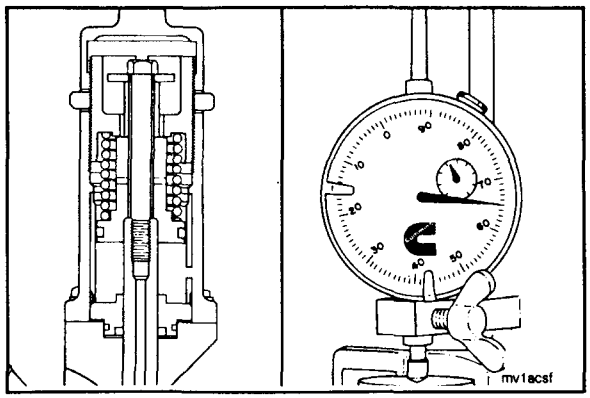

e. If the advanced injection timing is **not** within the specified limits, check the following:

1) The binding in the actuator mechanism.

2) Worn or damaged parts.

3) Correct spacer part number.

f. Replace unserviceable parts. Refer to Procedures 7-14 and 7-15.

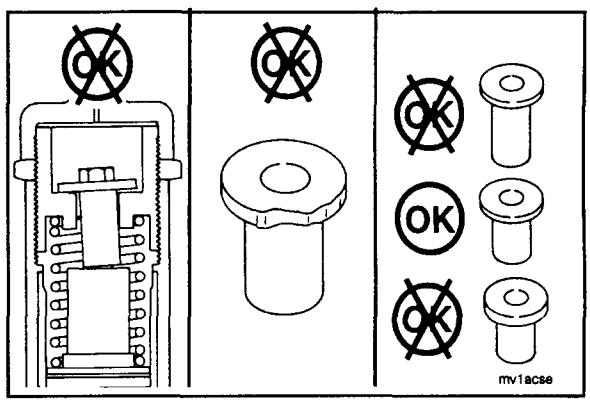

Caution: The advanced timing is controlled by the spacer length. The specified spacer part number must be used for each engine model and timing code. Refer to the "Control Parts List (CPL) Manual," Bulletin No. 3379133, and current parts catalogs.

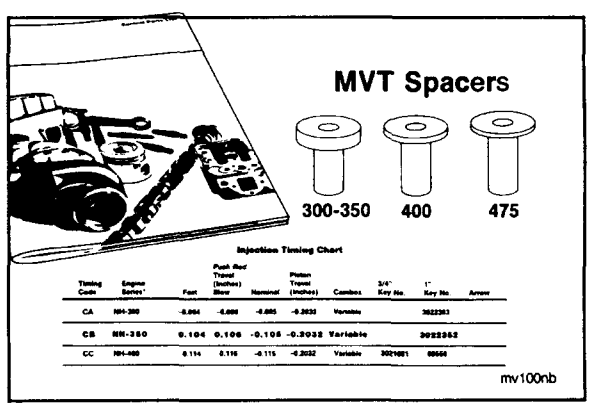

NOTE: Optimum injection timing of all the cylinders is obtained by setting the No. 3 cylinder. However, injector push rod travel may vary from cylinder to cylinder. The retarded injection timing **must** be checked on one cylinder for each of the remaining cam follower housings.

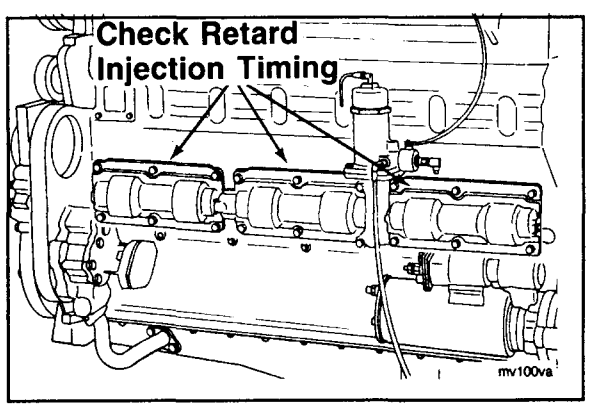

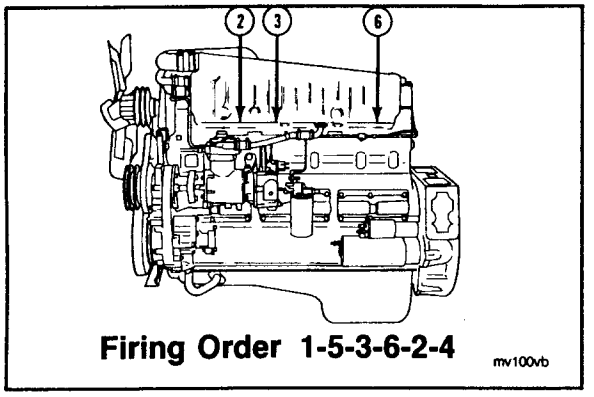

6. Check the retarded injection timing on cylinders No. 6 and No. 2.

NOTE: Checking the next two cylinders in the engine firing order (1-5-3-6-2-4) will keep the engine on the correct stroke.

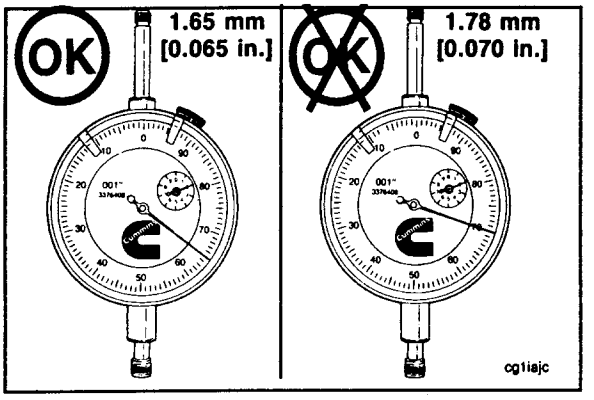

7. The retarded injection timing on the front and the rear cam follower assemblies **must not** vary more than plus or minus 0.10 mm [0.004-inch] from the retarded timing on the center cam follower assembly.

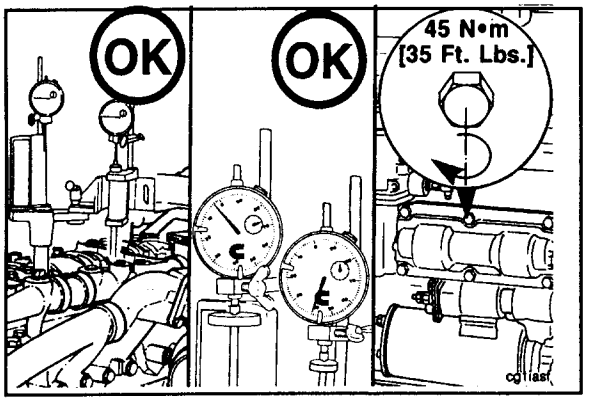

8. If there is more than plus or minus 0.10 mm [0.004-inch] variation in the retarded timing, check the following:
   a. Is the timing tool correctly installed?
   b. Are the gauges correctly adjusted?
   c. Are the cam follower housing capscrews correctly tightened?

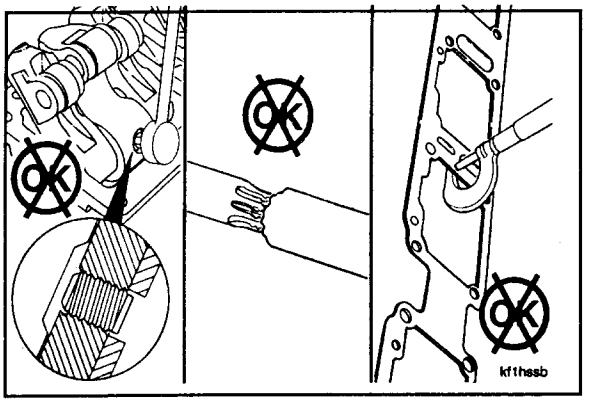

9. If there is more than plus or minus 0.10 mm [0.004-inch] after the above checks are performed, remove the entire MVT assembly. Refer to Procedure 7-15. Check the following:
   a. The eccentric to shaft capscrew torque.
   b. The shaft and the spline couplings for wear.
   c. The mounting gasket thickness for variation.

10. If the MVT injection timing is within specifications, remove the shop air from the air solenoid valve, if used.
11. Install and tighten the actuator cap to 40 N•m [30 ft-lbs] torque.

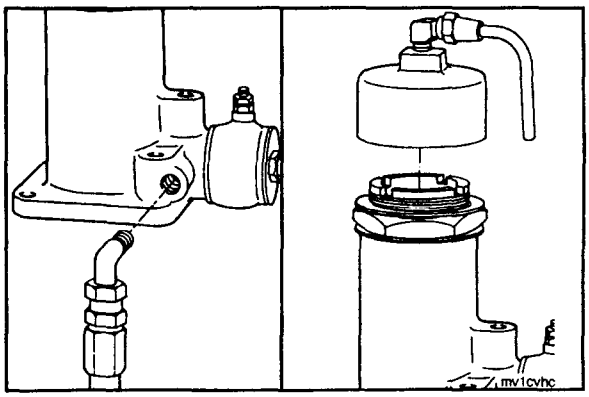

12. Install the injectors. Refer to Procedure 5-06.
13. Install the rocker housing covers. Refer to Procedure 7-02.

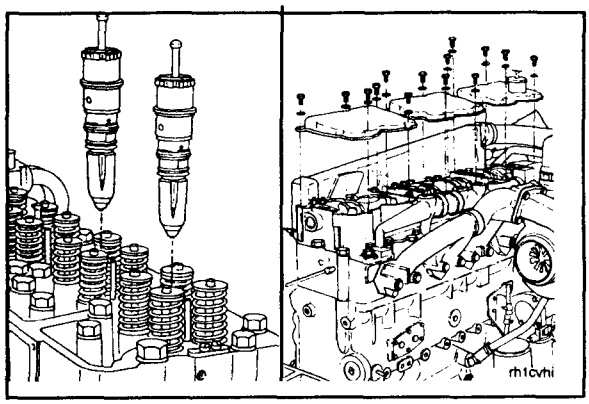

14. Operate the engine until it reaches a temperature of 80°C [180°F], and check for coolant or lubricating oil leaks and engine operation.

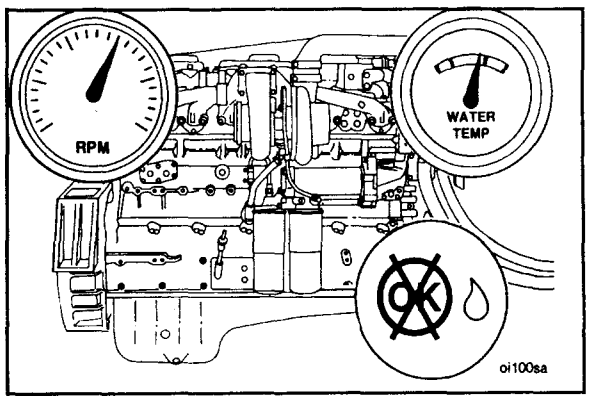

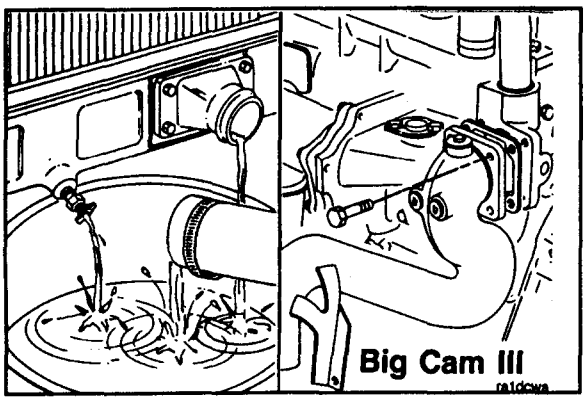

Piston Cooling Nozzles - Replace (7-19)

Remove

1. Drain the cooling system (Big Cam III only). Refer to Procedure 1-06.
2. Remove the coolant inlet transfer connection (Big Cam III only). Refer to Procedure 1-28.

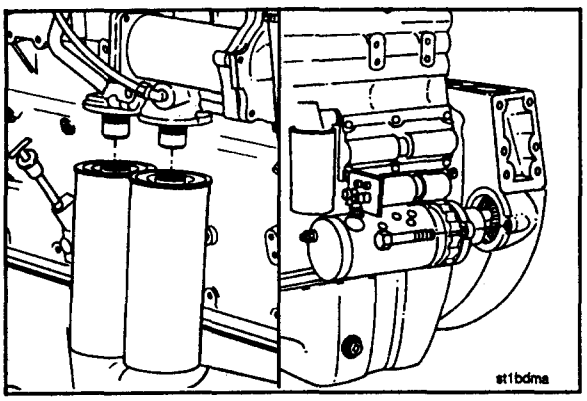

3. Remove the lubricating oil filters. Refer to Procedure 2-11.
4. Remove the starting motor (if required). Refer to Procedure 6-10.

NOTE: Some construction and industrial engines have the starting motor mounted on the right side of the engine.

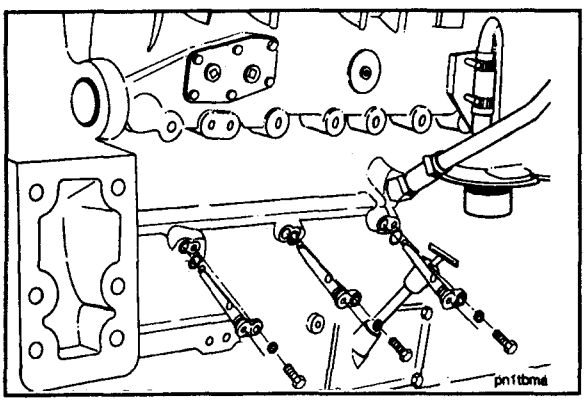

5. Remove the piston cooling nozzles.
6. Remove and discard the O-rings.

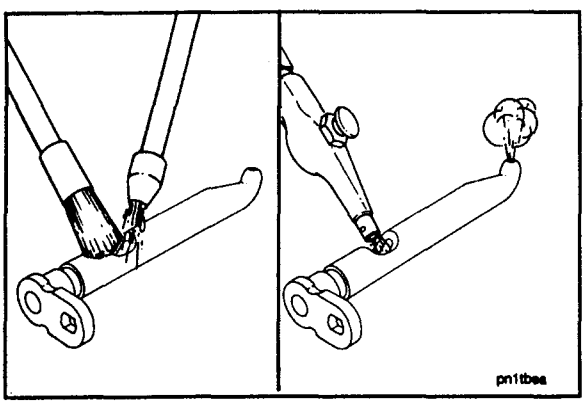

Clean and Inspect

1. Clean the piston cooling nozzles with an approved solvent, and dry with compressed air.
2. Blow out the oil passages with compressed air.

3. Visually inspect the piston cooling nozzles for cracks or damage.
4. Visually inspect the screws for damaged or mutilated threads.
5. Replace any parts that are damaged.

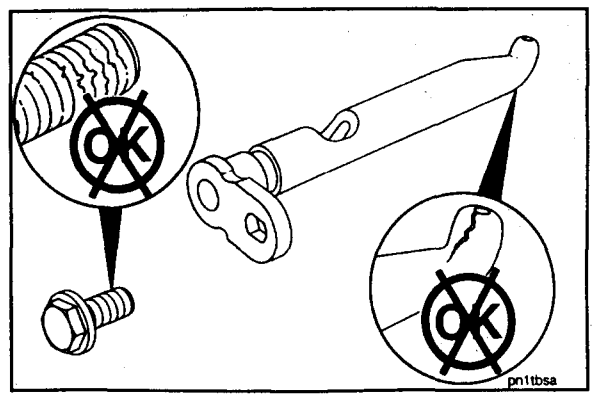

Install

Caution: Do not soak the new O-rings in engine oil.

1. Use vegetable oil to lubricate the new O-rings.
2. Install the O-rings in the groove of the piston cooling nozzle with Part No. ST-835 O-ring Assembly Tool.

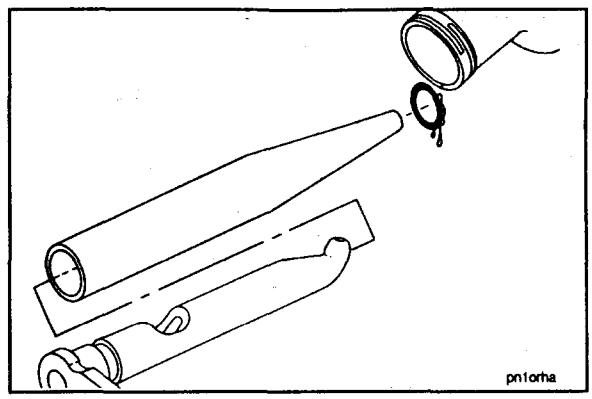

3. Install the nozzles in the cylinder block.

NOTE: Make sure the oil passage opening in the piston cooling nozzle is pointing up toward the piston.

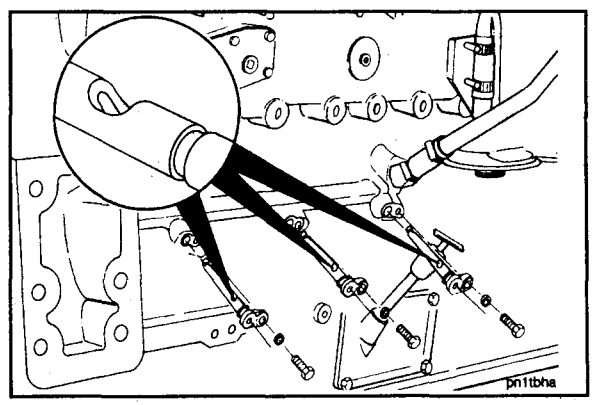

4. Install the capscrews as follows:
   a. Tighten the hexagon head capscrews to 15 N•m [140 in-lbs] torque.
   b. Tighten the slotted head screws to 10 N•m [95 in-lbs] torque.

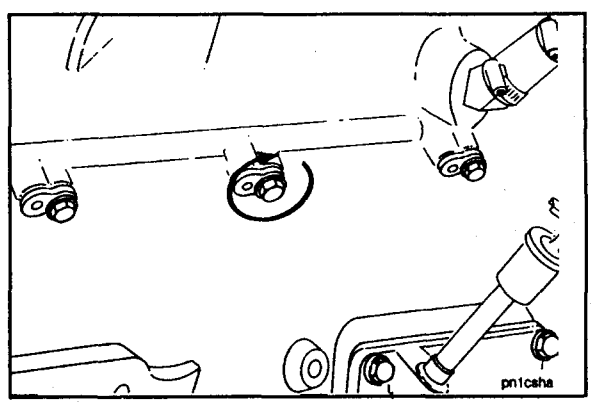

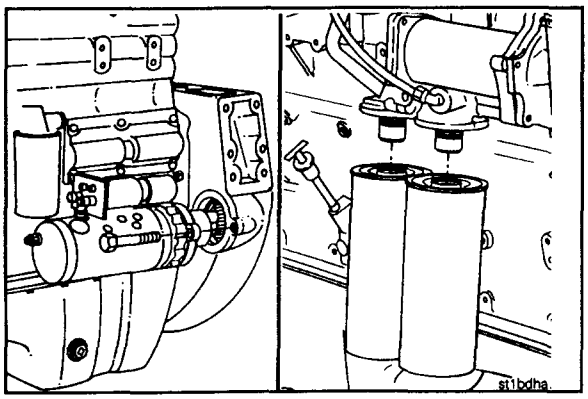

5. Install the starting motor (if removed). Refer to Procedure 6-10.
6. Install the lubricating oil filters. Refer to Procedure 2-11.

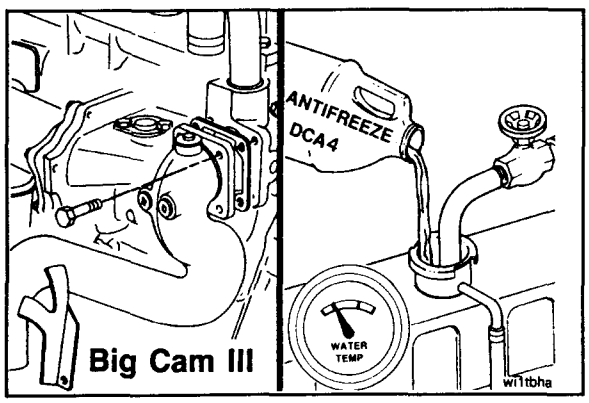

7. Install the coolant inlet transfer connection (Big Cam III only). Refer to Procedure 1-28.
8. Fill the cooling system (Big Cam III only). Refer to Procedure 1-07.

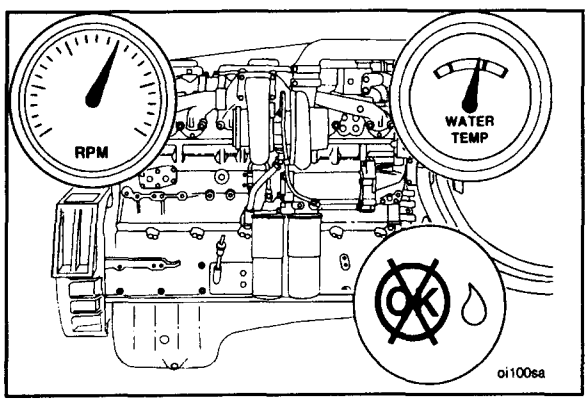

9. Operate the engine until it reaches a temperature of 80°C [180°F], and check for coolant or lubricating oil leaks.

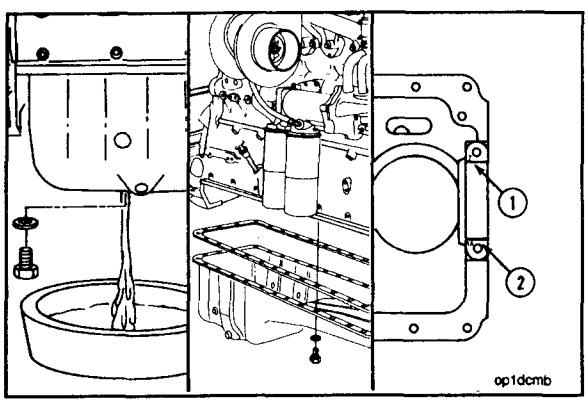

Main and Thrust Bearings - Replace (7-20)

Remove

1. Drain the lubricating oil. Refer to Procedure 2-09.
2. Remove the lubricating oil pan. Refer to Procedure 2-16.

Caution: The main bearing caps are marked for position (1) on the camshaft side and the cylinder block identification (2) on the exhaust side. Mark any caps that are not marked before removing them from the cylinder block.

Caution: Replace main bearings one at a time.

3. Remove the No. 7 main bearing cap capscrews and washers.

NOTE: The No. 7 main bearing cap has thrust bearings and dowel pins.

Caution: The Service Tool listed below must be centered on the cap.

4. Use Part No. ST-1178 Main Bearing Cap Puller to remove the cap.

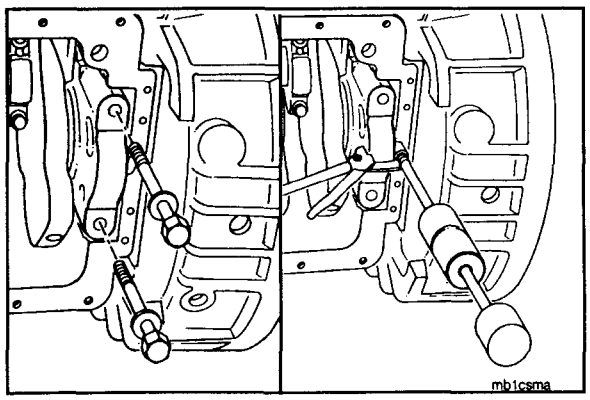

5. Remove the lower main bearing shell from the crankshaft journal.

NOTE: Mark the bearing shells with the journal number from which they were removed.

6. Remove the dowel ring.

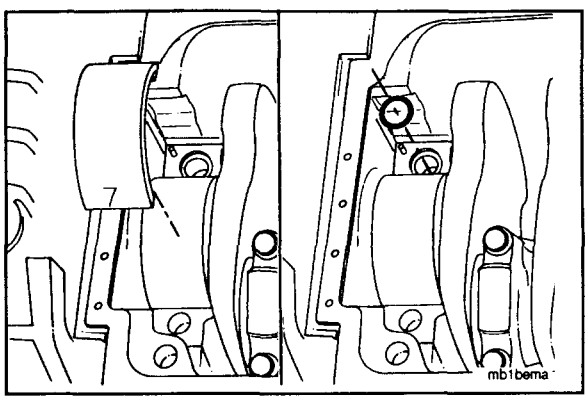

7. Remove the thrust bearings from the No. 7 cap.
8. Mark these bearings as the bottom front and the bottom rear thrust bearings.

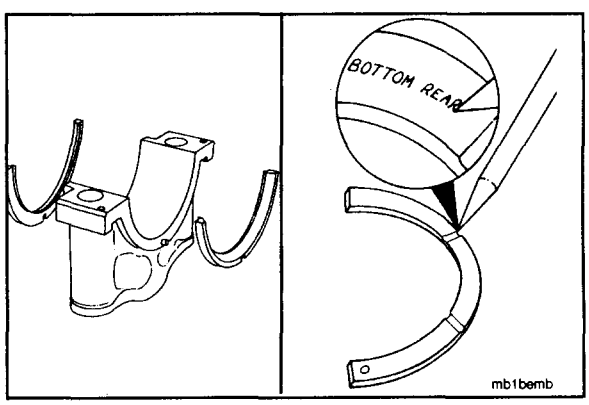

Caution: Do not damage the crankshaft when removing the thrust bearings.

9. Use a blunt tool to remove the upper thrust bearings.
10. Mark these bearings as the top front and the top rear thrust bearings.

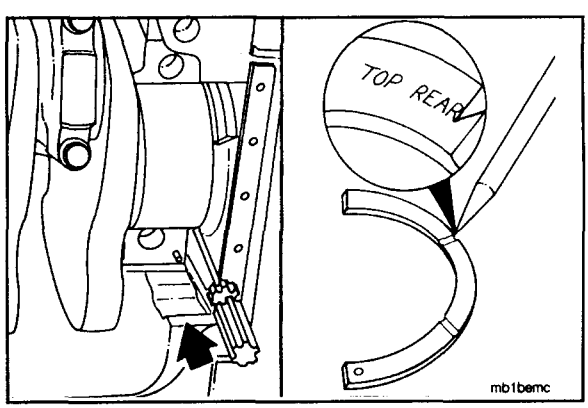

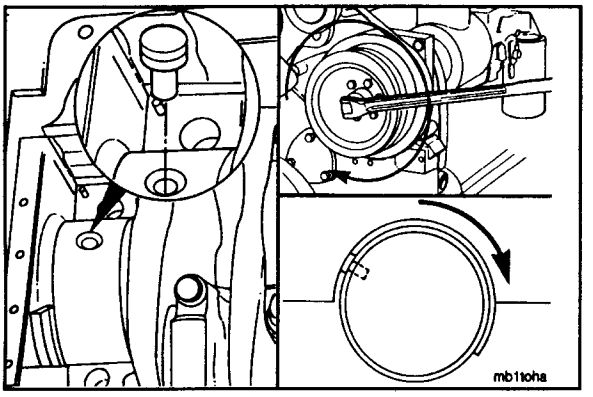

11. To remove the upper main bearing shell, install a tool similar to the one in the picture in the oil hole of the main bearing journal.
12. Rotate the crankshaft with the accessory drive pulley to remove the main bearing shell.

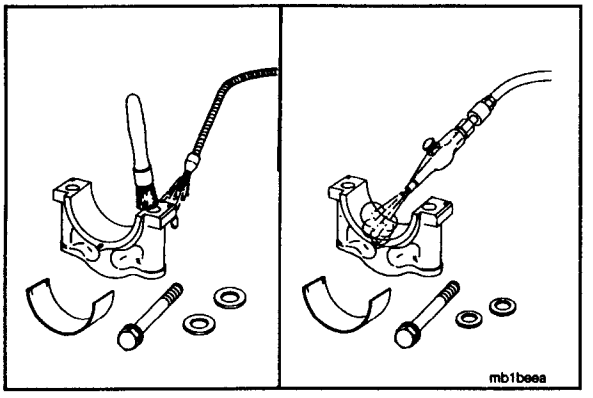

Clean and Inspect

1. Use a soft bristle brush to clean the parts, and dry with compressed air.

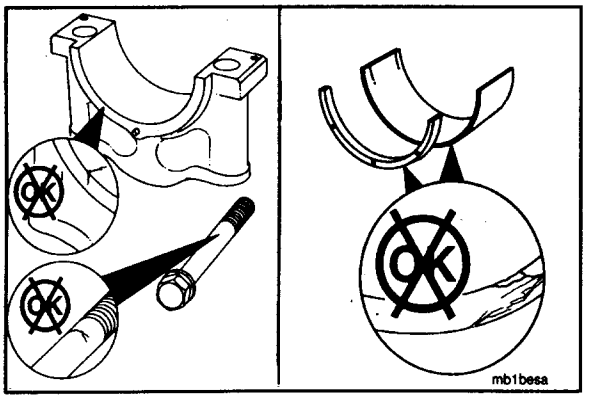

2. Visually inspect the main cap and capscrews for damage.
3. Visually inspect the bearing shells and the thrust bearings for nicks, scratches, or damage.

NOTE: If the main bearings are damaged, refer to the "NT Engine Shop Manual" to inspect the crankshaft main bearing journals. If the crankshaft is damaged, the engine must be removed for repair. Refer to Procedure 9-03.

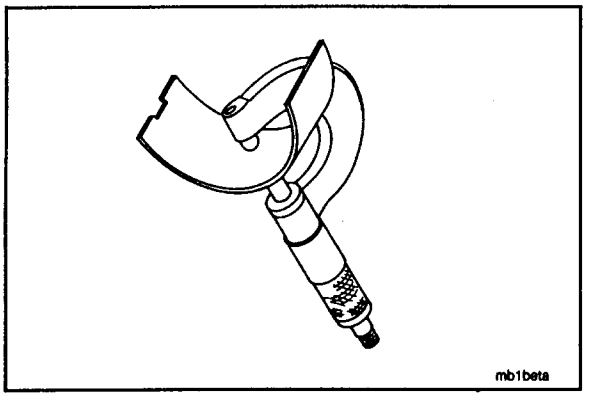

4. Use an outside diameter ball tipped micrometer to measure the main bearing shell thickness.

Standard Main Bearing Shell Thickness		
mm		in
3.086	MIN	0.1215
3.145	MAX	0.1238

5. Discard a main bearing shell if its thickness is below the minimum specification.

NOTE: For more detailed information of bearing damage, refer to "Analysis and Prevention of Bearing Failures," Bulletin No. 3387074.

NOTE: Bearing shells are available for crankshafts which are 0.25 mm [0.010-inch], 0.51 mm [0.020-inch], 0.76 mm [0.030-inch], or 1.02 mm [0.040-inch] undersize. Crankshafts which are ground undersize in the connecting rod and main bearing journals are marked on the front counter weight. If the crankshaft is marked, check the bearing shell part number to make sure the correct bearing size is used.

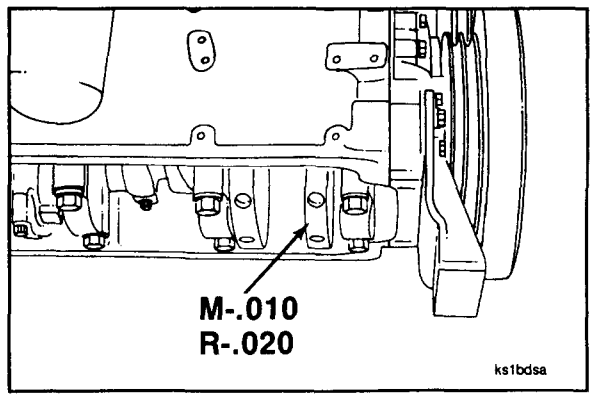

Install

NOTE: The upper main bearing shells have a groove and an oil hole to provide crankshaft lubrication. The lower main bearing shells do **not**. The groove for the No. 7 shell is **not** in the center of the shell. The wider part of the No. 7 shell **must** be installed toward the flywheel end of the cylinder block.

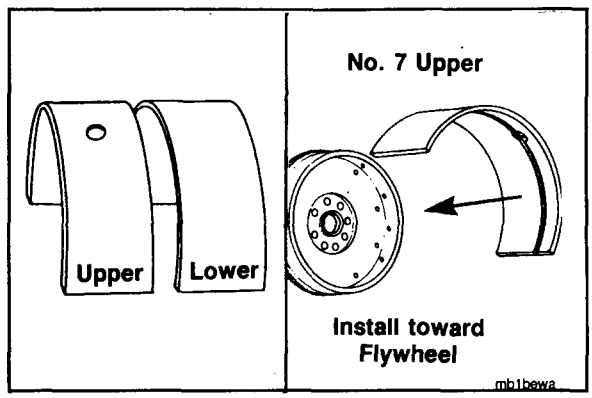

Caution: The cylinder block saddle and the cap mating surfaces must be clean and dry when the bearing shells are installed. Used bearings must be installed in their original location.

1. Use clean Lubriplate 105 or its equivalent to lubricate the upper main bearing shell to crankshaft journal mating surface.
2. Install the upper main bearing shell. Use the same method that was used to remove the shell.

Caution: The groove for the dowel ring must be next to the dowel ring counterbore in the cylinder block.

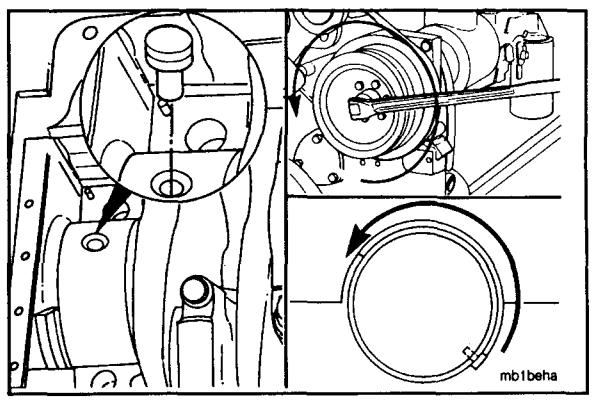

3. Use clean Lubriplate 105 or its equivalent to lubricate the upper thrust bearings.

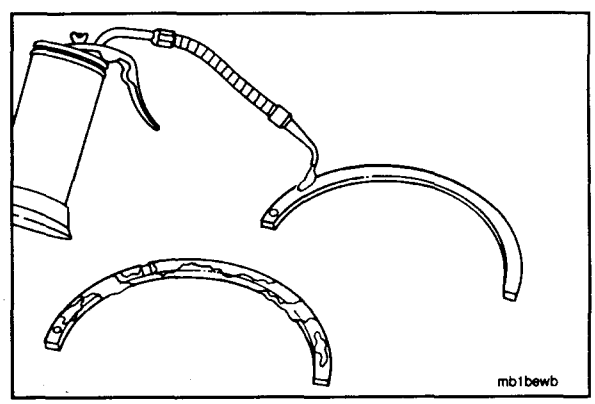

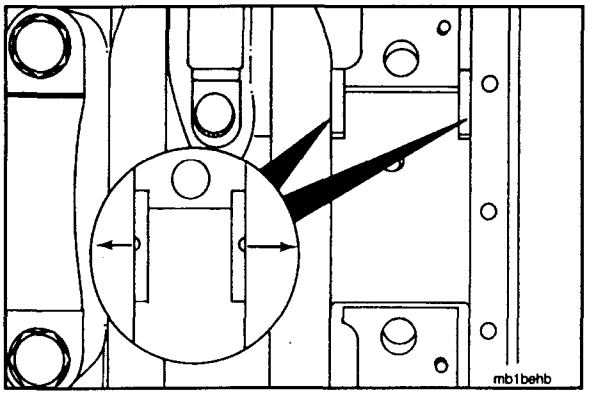

Caution: The grooves must be toward the crankshaft.

4. Install the upper thrust bearings in the No. 7 main bearing saddle.

NOTE: Push the crankshaft toward the rear of the engine to install the front bearing and to the front of the engine to install the rear bearing.

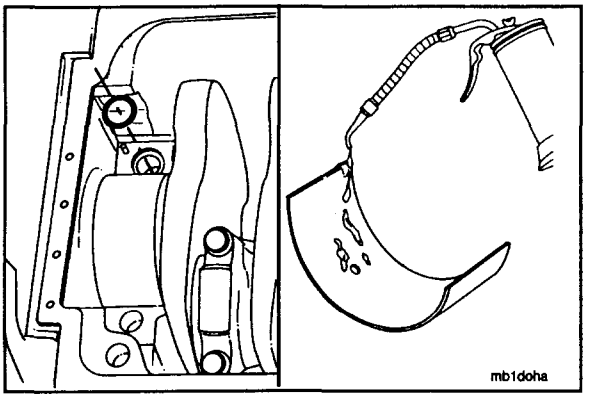

5. Install the dowel ring in the dowel ring counterbore of the cylinder block.
6. Install the lower main bearing shell as follows:
   a. *Use clean Lubriplate 105 or its equivalent to lubricate the bearing shell to the crankshaft journal mating surface.*

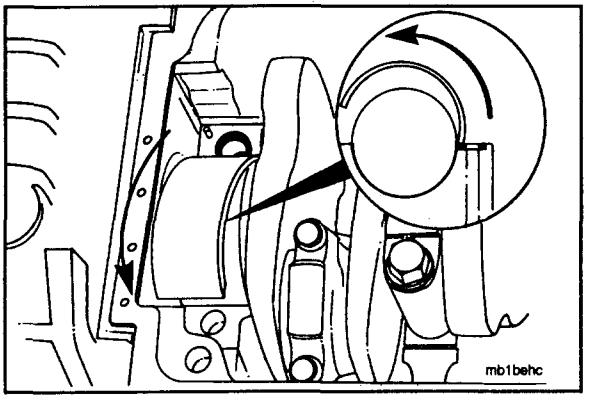

   b. Align the bearing shell with the dowel ring.
   c. Push on the side of the bearing shell **opposite** the dowel ring to install the bearing shell.

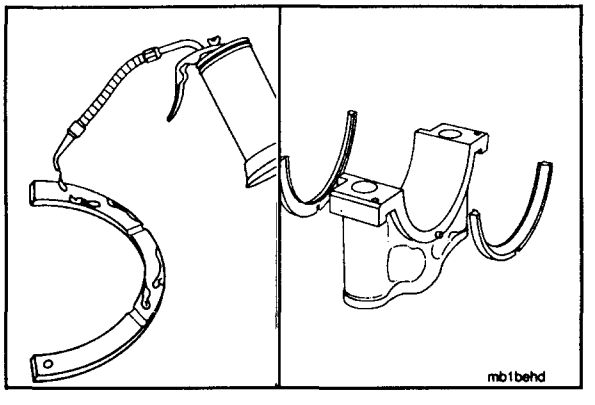

7. Use clean Lubriplate 105 or its equivalent to lubricate the lower thrust bearings.

Caution: The grooves of the thrust bearing must be toward the crankshaft. The locating dowels must not protrude above the thrust bearing surface.

8. Install the lower thrust bearings in the No. 7 main bearing cap as shown.

9. Use clean 15W-40 oil to lubricate the capscrew threads and the flat washers.
10. Drain the excess oil from the capscrews before installing them.

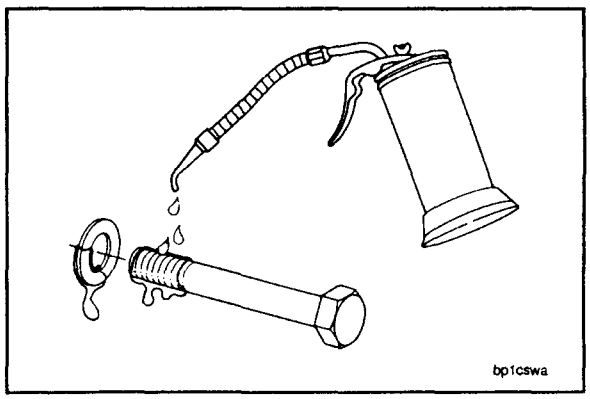

Caution: The main bearing caps are marked for position (1) on the camshaft side and the cylinder block identification (2) on the exhaust side. The cylinder block identification number (3) is stamped on the pan rail on the camshaft side of the block. install the caps in the correct position with the position number to the camshaft side and its part number toward the rear of the engine.

11. Install the main bearing caps as follows:
    a. Align the capscrew holes in the cap with the holes in the cylinder block. Make sure the ring dowel and the lower bearing shell are in position.

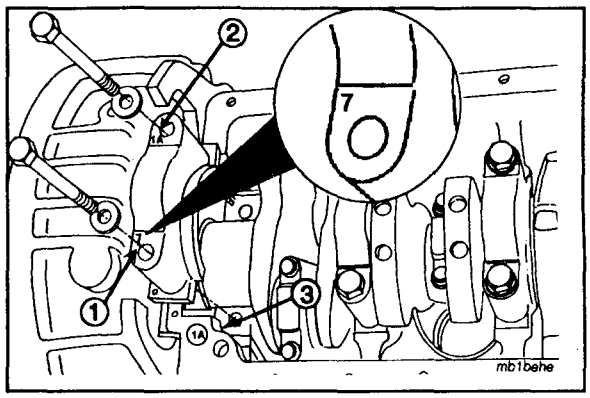

    b. Install the capscrews and the washers through the cap and into the cylinder block.
    c. Use your hand to tighten the capscrews two to three threads.

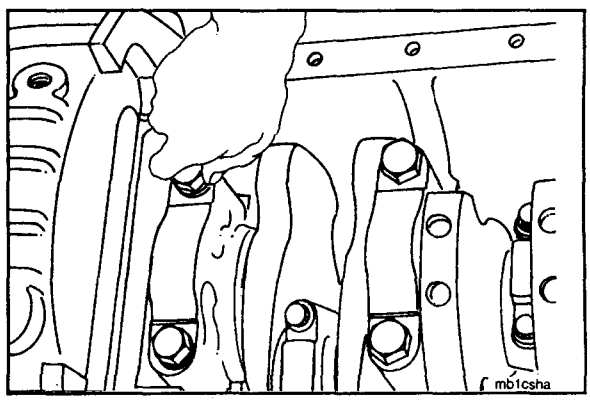

Caution: When hitting the cap, make sure the bearing shell and dowel ring do not move.

    d. Hit the cap with a rubber mallet to push it into the correct position.

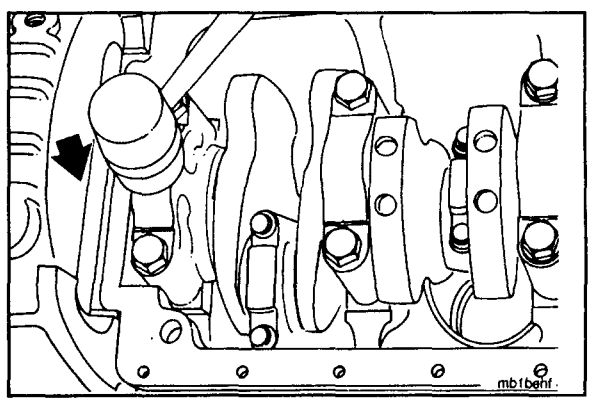

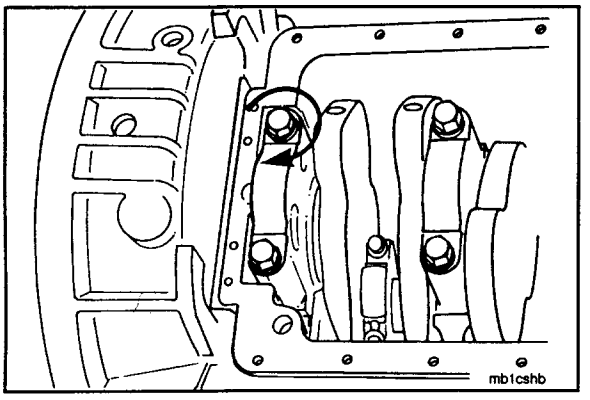

12. Tighten the capscrews on a main bearing cap on engines built with 1-inch diameter main bearing capscrews to the following torque values:
    a. Tighten both to 150 N•m [110 ft-lbs].
    b. Tighten both to 285 N•m [210 ft-lbs].
    c. Tighten both to 415 N•m [305 ft-lbs].
    d. Loosen both completely.
    e. Repeat steps a. through c.

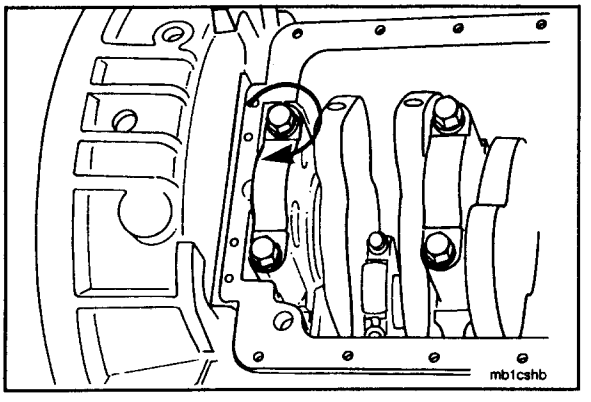

13. Tighten the capscrews on a main bearing cap on engines built with 3/4-inch diameter main bearing capscrews to the following torque values:
    a. Tighten both to 120 N•m [90 ft-lbs].
    b. Tighten both to 230 N•m [170 ft-lbs].
    c. Tighten both to 345 N•m [255 ft-lbs].
    d. Loosen both completely.
    e. Repeat steps a. through c.
14. Replace the main bearing shells No. 1 through No. 6.

NOTE: Main bearings No. 1 through No. 6 do **not** have thrust bearings.

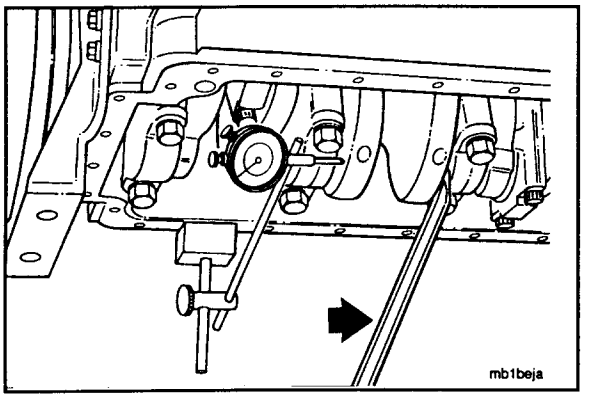

15. Measure the end clearance of the crankshaft as follows:
    a. Install a dial indicator to the oil pan flange.
    b. Put the tip of the gauge against the crankshaft counter weight.
    c. Push the crankshaft toward the rear of the cylinder block.

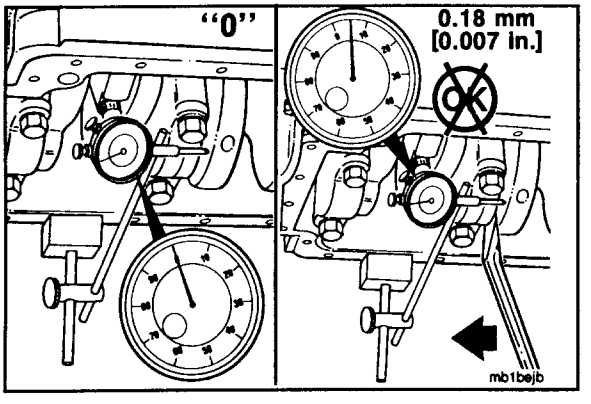

    d. Set the dial indicator at "0" (zero).
    e. Push the crankshaft toward the front of the cylinder block.
    f. If the end clearance is less than 0.18 mm [0.007-inch], do the following:

1) Loosen the main bearing capscrew one turn.
2) Push the crankshaft toward the front and then toward the rear of the cylinder block.

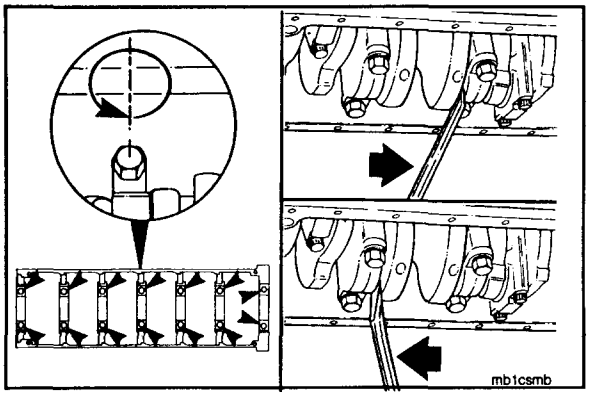

3) Tighten the main bearing capscrews in the sequence shown to the torque values listed in step No. 12 or step No. 13 on the preceding page.

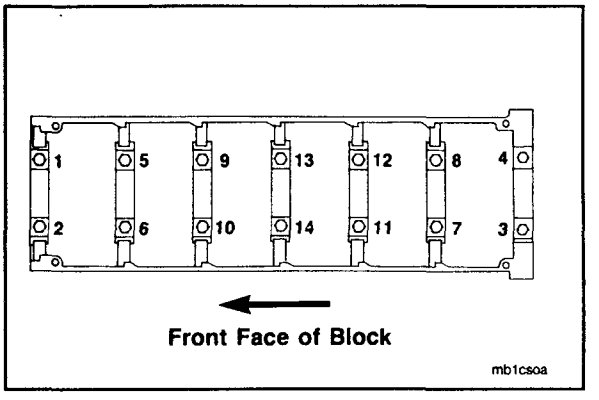

4) Measure the crankshaft end clearance. The end clearance specification for a new or reground crankshaft with new thrust bearings is 0.18 mm [0.007-inch] to 0.45 mm [0.018-inch].

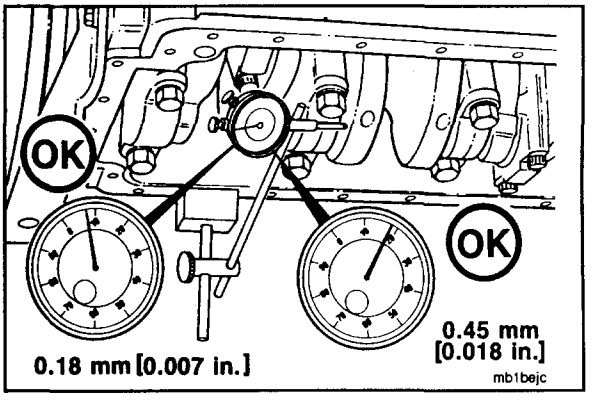

NOTE: Crankshafts that have been reground on the thrust bearing surfaces are marked for oversize thrust bearings on the rear crankshaft counter weight. If the crankshaft counter weight is marked, check the thrust ring part number to make sure the correct thrust ring size is used.

Example: F-.010 = Front 0.25 mm [0.010-inch]

Example: R-.020 = Rear 0.51 mm [0.020-inch]

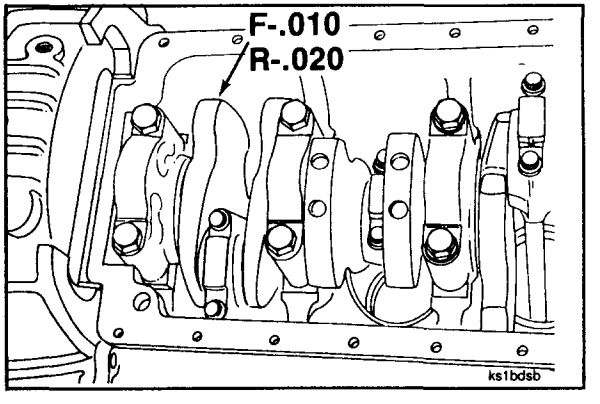

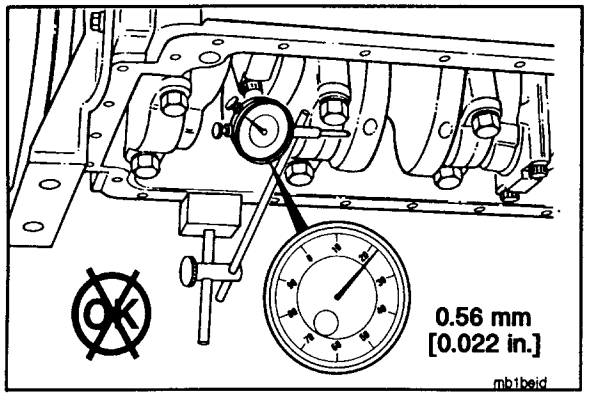

g. If the crankshaft end play is more than 0.56 mm [0.022-inch], the crankshaft **must** be removed from the engine and repaired. Refer to the "Alternative Repair Manual," Bulletin No. 3379035.

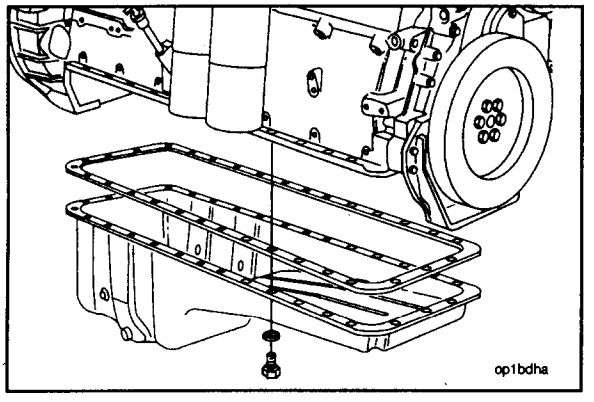

16. Install the lubricating oil pan. Refer to Procedure 2-16.

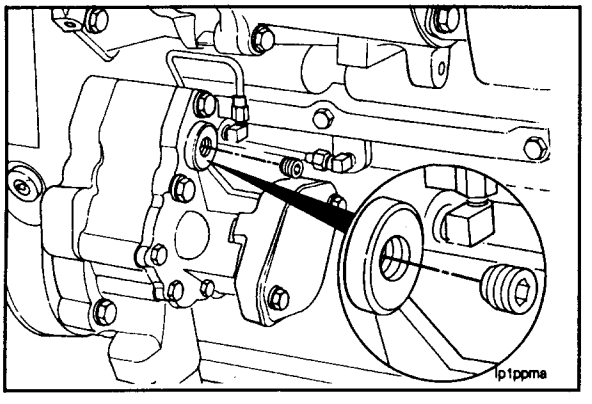

Caution: The lubricating oil system must be primed before operating the engine after any internal engine repairs to avoid internal component damage. Do not prime the system from the bypass filter; the filter will be damaged.

17. Remove the pipe plug from the lubricating oil pump cover.

NOTE: Lubricating oil pumps on Big Cam IV engines are equipped with a 9/16 - 18 UNF Compuchek® Coupling nipple. Use Part No. 3376859 Coupler to connect the priming pump to the coupling.

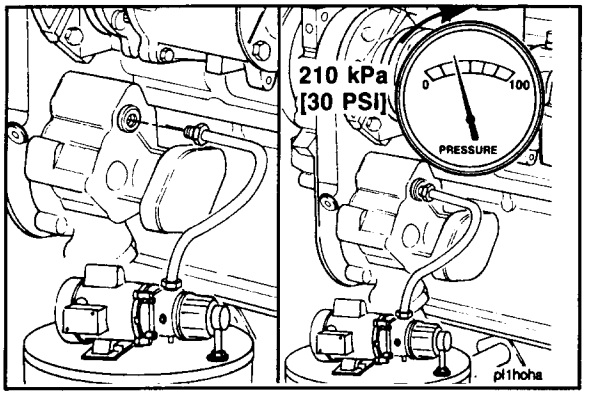

18. Install the priming pump oil supply hose. Use clean 15W-40 lubricating oil out of a bucket or a container. Supply oil to the crossover oil passage.

19. Allow the oil to flow until the oil pressure gauge indicates a maximum pressure of 210 kPa [30 psi] to prime the lubricating oil system.

20. Fill the engine with lubricating oil. Refer to Procedure 2-10.

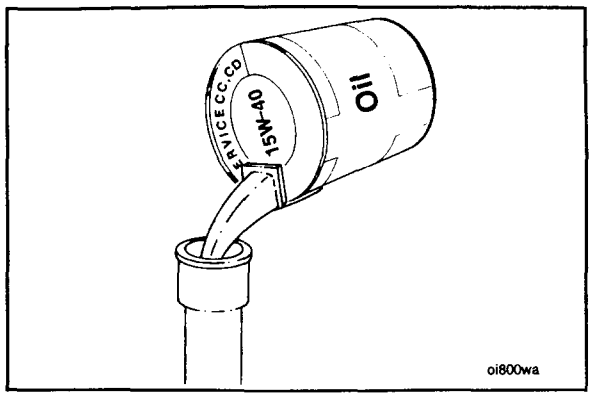

21. Operate the engine until it reaches a temperature of 80°C [180°F], and check for lubricating oil leaks.

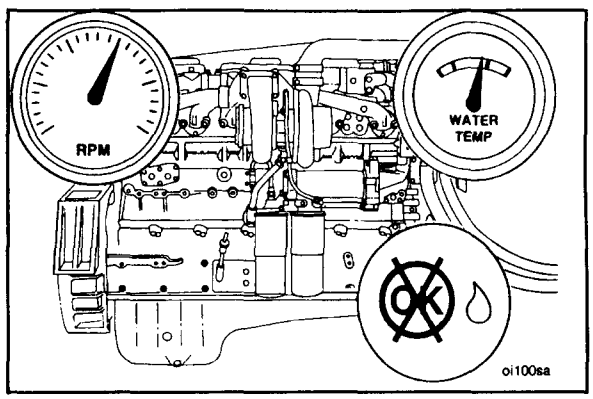

Connecting Rod Bearings - Replace (7-21)

Remove

1. Drain the lubricating oil. Refer to Procedure 2-09.
2. Remove the lubricating oil pan. Refer to Procedure 2-16.

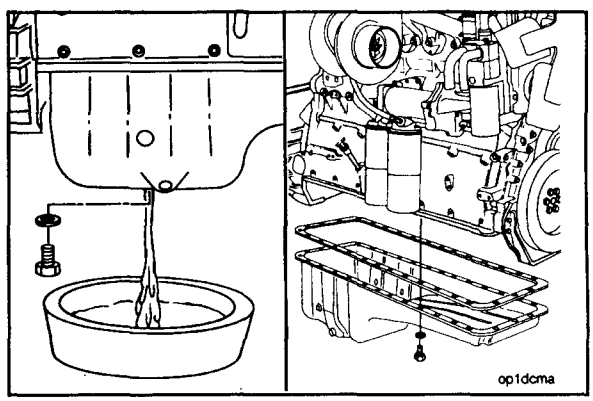

3. Rotate the crankshaft to position two of the connecting rods at "BDC" (bottom dead center).

NOTE: Use the accessory drive pulley to rotate the crankshaft.

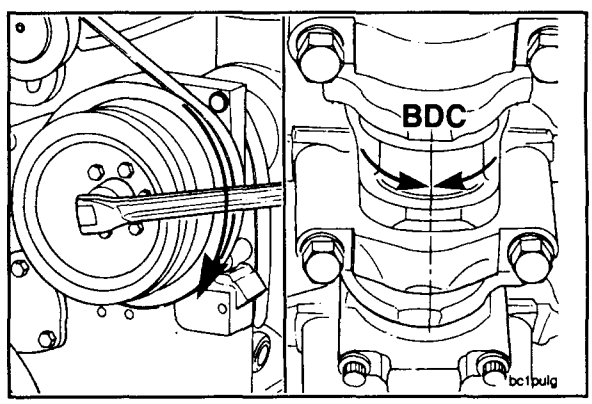

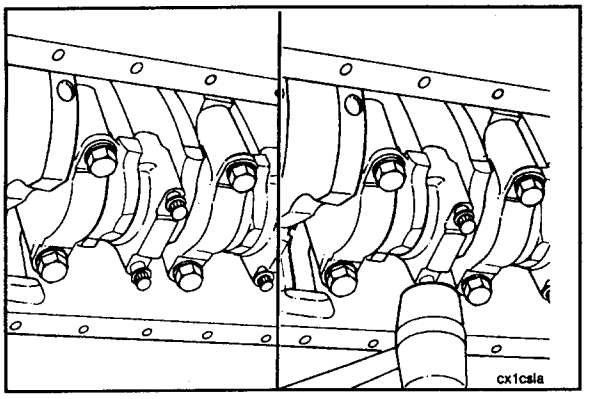

4. Loosen the connecting rod capscrews.

NOTE: Do **not** remove the capscrews.

5. Hit the connecting rod capscrews with a rubber hammer to loosen the rod caps from the dowels.

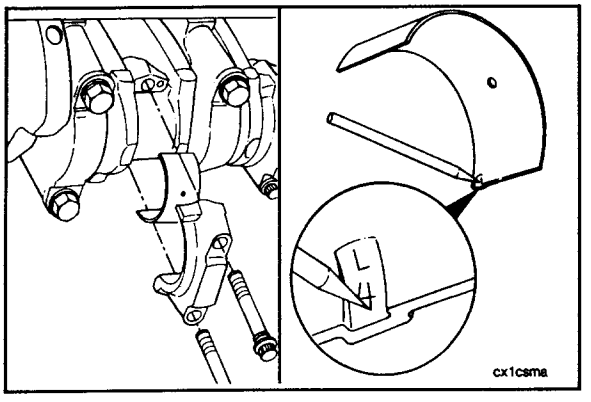

6. Remove the capscrews and the rod cap.
7. Remove the bearing shell from the rod cap, and mark it as the lower bearing shell from the connecting rod number from which it was removed.

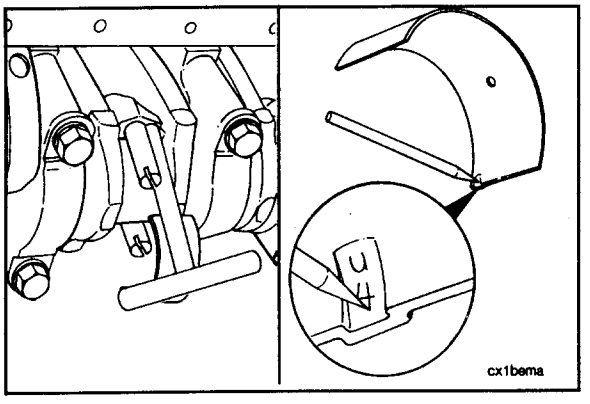

8. Push the rod up far enough to allow the upper bearing shell to be removed.
9. Remove the bearing shell, and mark it as the upper bearing shell from the connecting rod number from which it was removed.

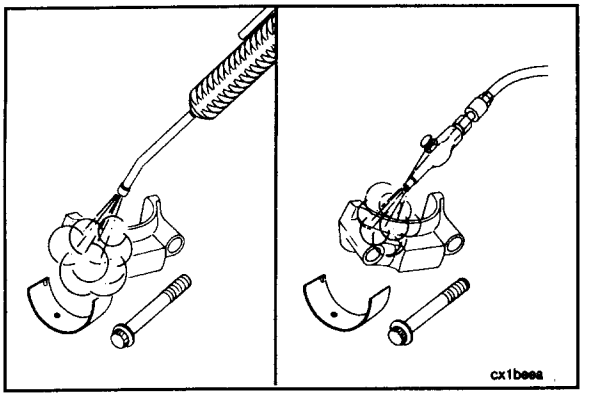

Clean and Inspect

1. Steam clean the parts, and dry with compressed air.

2. Visually inspect the rod caps, the connecting rod bearing saddles, and the capscrews for nicks, cracks, burrs, scratches, or fretting.

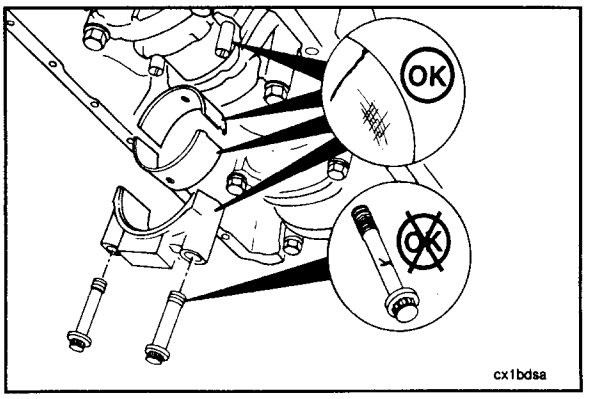

3. Visually inspect the bearings for damage.

NOTE: Replace any bearings with lock tang damage or scratches (deep enough to be felt with a fingernail). Also replace any bearings which show pitting, flaking, or corrosion in the copper lining.

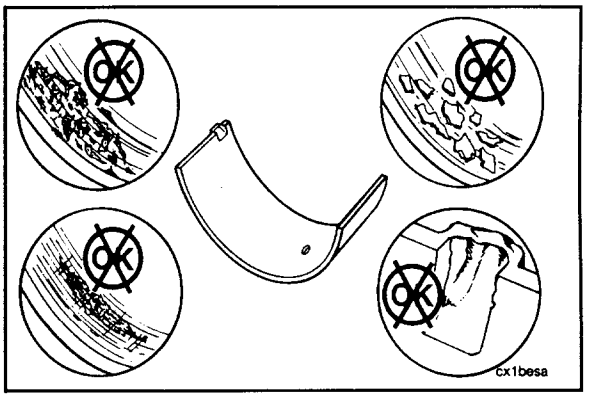

NOTE: Normal bearing wear produces a smooth finish which will wear into the copper lining. Exposed copper does **not** always indicate worn bearings. If large areas of copper lining are visible in the bearings before the engine has accumulated 240,000 kilometers [150,000 miles] or 3,750 hours, inspect the engine for contamination from fine dirt particles and correct the problem.

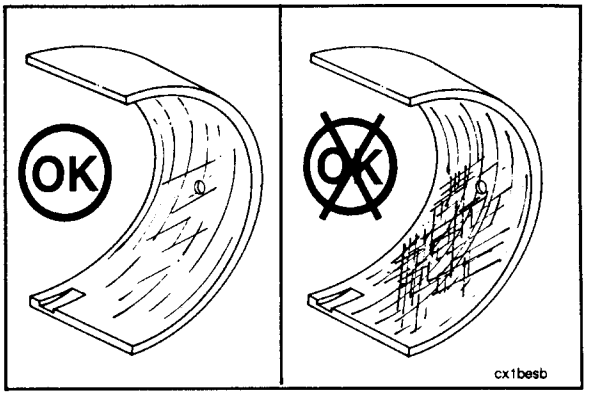

4. Visually inspect the bearing seating surface for nicks or burrs.
5. If nicks or burrs can **not** be removed with a fine crocus cloth, the bearings **must** be replaced.

NOTE: For more detailed information of bearing damage, refer to "Analysis and Prevention of Bearing Failures," Bulletin No. 3387074.

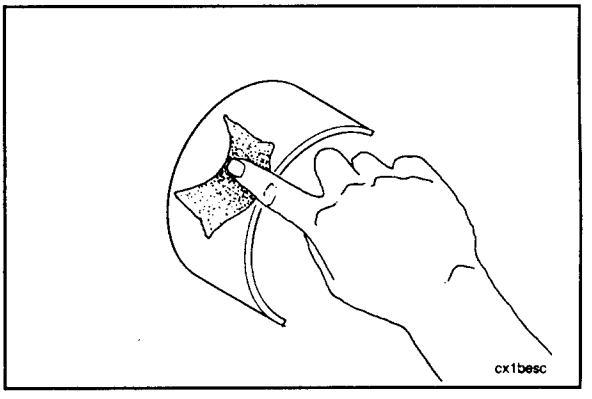

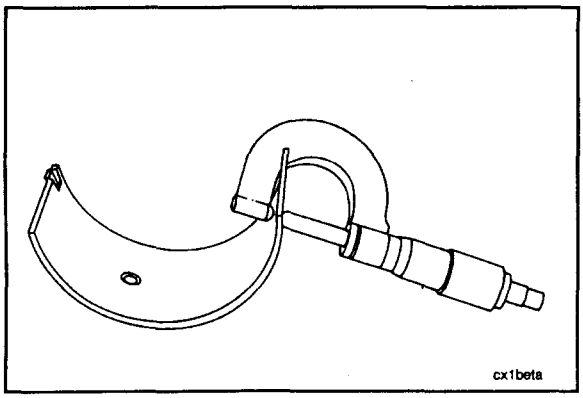

6. Measure the rod bearing shell thickness with an outside micrometer that has a ball tip.

Standard Connecting Rod Bearing Thickness		
mm		in
2.362	MIN	0.093
2.405	MAX	0.0947

7. Discard a bearing shell if its thickness is below the minimum specification.

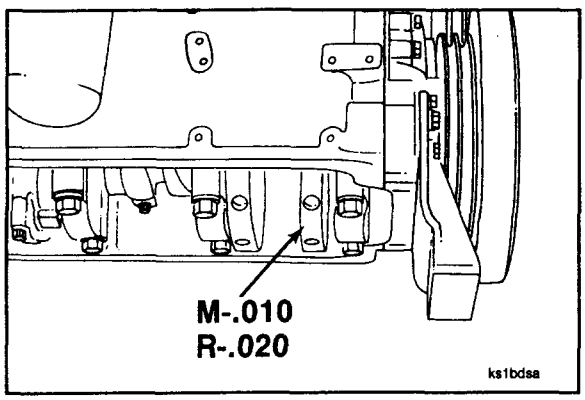

NOTE: Bearing shells are available for crankshafts which are 0.25 mm [0.010-inch], 0.51 mm [0.020-inch], 0.76 mm [0.030-inch], or 1.02 mm [0.040-inchj undersize. Crankshafts which are ground undersize in the connecting rod or the main bearing journals are marked on the front counter weight. If the crankshaft is marked, check the bearing shell part number to make sure the correct bearing size is used.

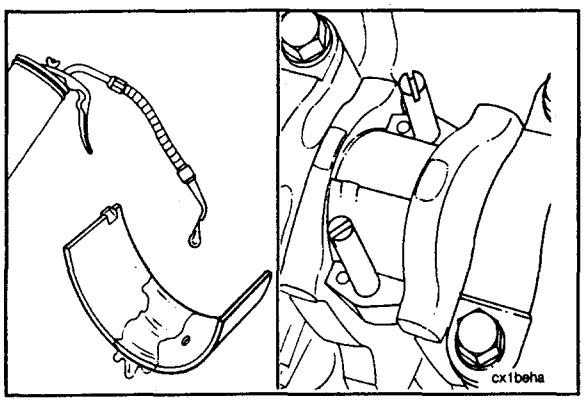

Install

Caution: The connecting rod and bearing shell mating surfaces must be clean and dry when the bearing shells are installed. Used bearings must be installed in their original location.

1. Use clean Lubriplate 105 or its equivalent to lubricate the crankshaft journal mating surface of the upper bearing shell.
2. Install the upper bearing shell in the connecting rod with the tang of the bearing in the slot of the rod.

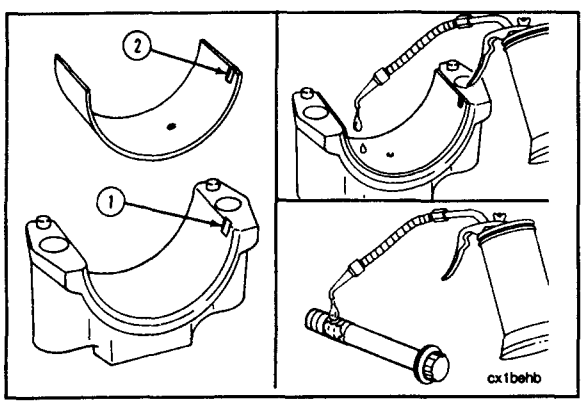

3. Install the bearing shell in the connecting rod cap with the tang (2) of the bearing in the slot (1) of the cap.
4. Use clean Lubriplate 105 or its equivalent to lubricate the bearing shell to crankshaft journal mating surface and the connecting rod capscrews.

Caution: The rod cap number must match the number on the connecting rod and must be installed with the numbers aligned to prevent damage to the connecting rods and the crankshaft. The locking tang of the connecting rod cap must be toward the camshaft side of the cylinder block.

5. Install the cap on the connecting rod.

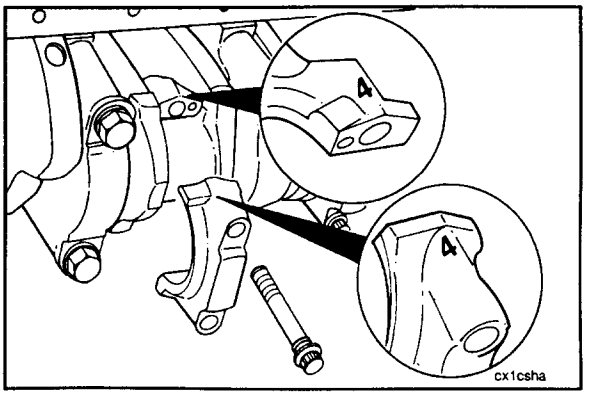

6. Tighten the connecting rod capscrews in alternating sequence to the following torque values:
   a. Tighten to 100 N•m [75 ft-lbs].
   b. Tighten to 230 N•m [170 ft-lbs].
7. Measure the connecting rod side clearance. Refer to Procedure 7-23.
8. Repeat steps No. 1 through No. 7, and install the remaining bearing shells and connecting rod caps.

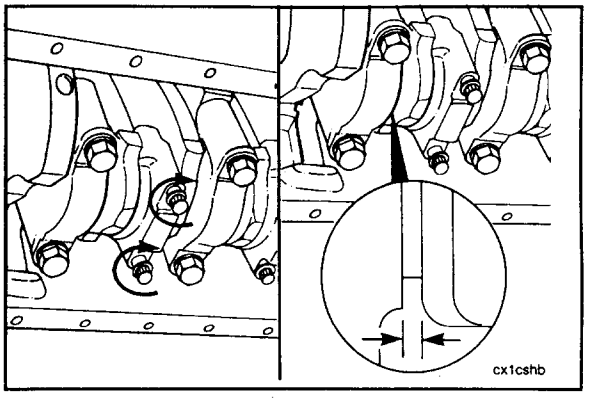

9. Install the lubricating oil pan. Refer to Procedure 2-16.

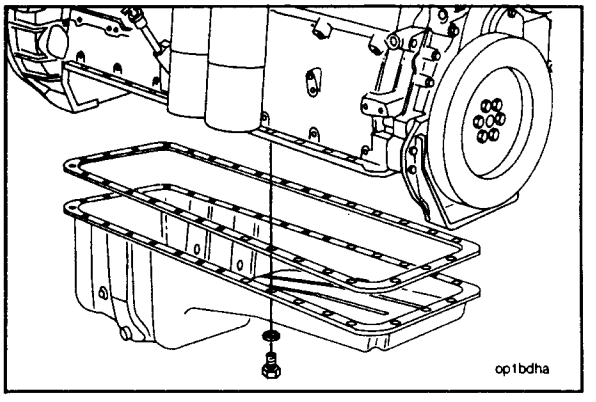

Caution: The lubricating oil system must be primed before operating the engine after any internal engine repairs to avoid internal component damage. Do not prime the system from the bypass filter; the filter will be damaged.

10. Remove the pipe plug from the lubricating oil pump cover.

NOTE: Lubricating oil pumps on Big Cam IV engines are equipped with a 9/16 - 18 UNF Compuchek® coupling nipple. Use Part No. 3376859 Coupler to connect the priming pump to the coupling.

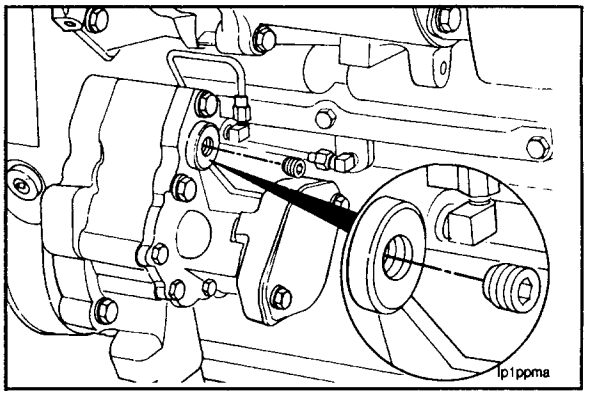

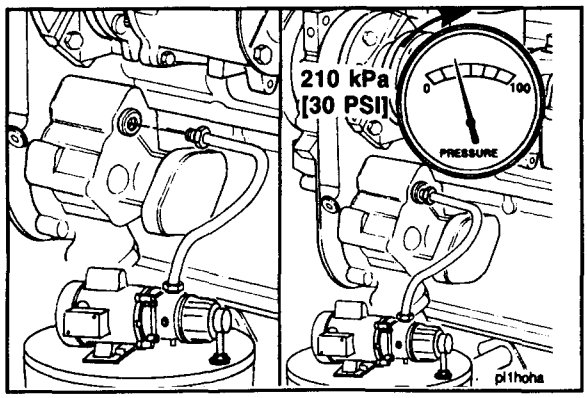

11. Install the priming pump oil supply hose. Use clean 15W-40 lubricating oil out of a bucket or a container. Supply oil to the crossover oil passage.
12. Allow the oil to flow until the oil pressure gauge indicates a maximum pressure of 210 kPa [30 psi] to prime the lubricating oil system.

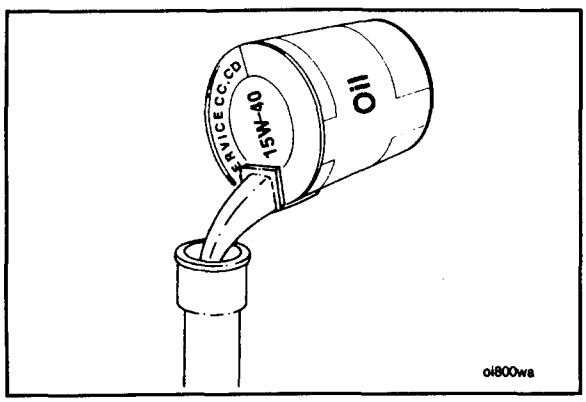

13. Fill the lubricating oil pan. Refer to Procedure 2-10.

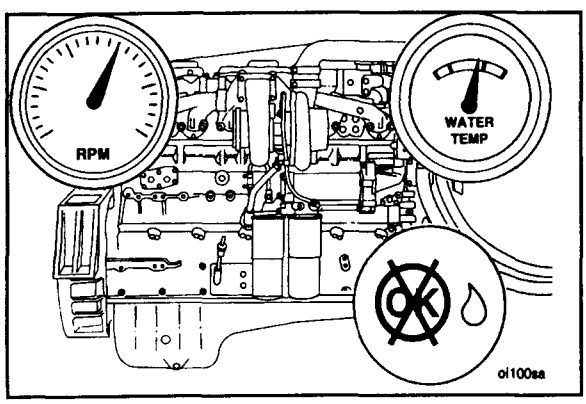

14. Operate the engine until it reaches a temperature of 80°C [180°F], and check for lubricating oil leaks.

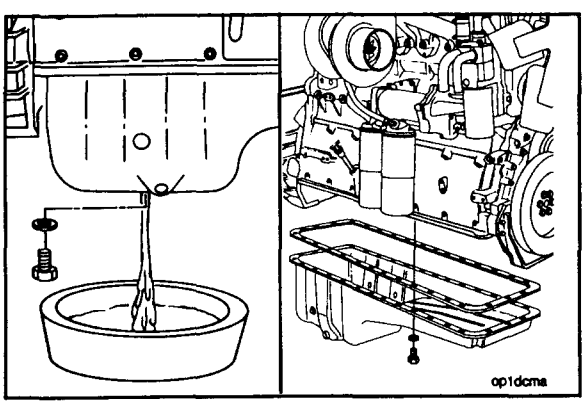

Pistons and Rings - Replace (7-22)

Remove

1. Drain the lubricating oil. Refer to Procedure 2-09.
2. Remove the lubricating oil pan. Refer to Procedure 2-16.

3. Remove the cylinder heads. Refer to Procedure 7-11.
4. Remove the piston cooling nozzles. Refer to Procedure 7-19.

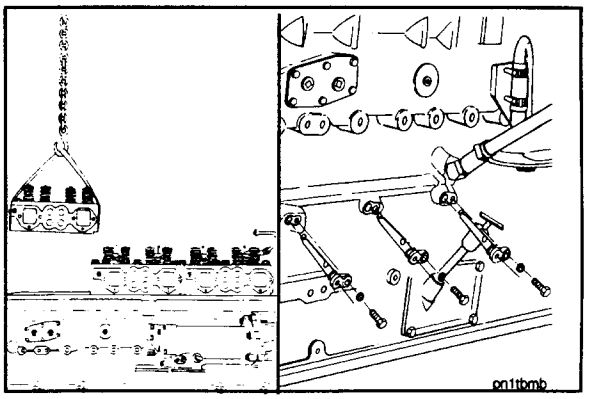

Warning: When performing the following procedures, wear eye protection. Also, make sure the wire brush is rated for the RPM being used if the brush is motor driven.

Caution: Do not use abrasive paper to remove the carbon ring. Small particles of abrasive paper will cause severe engine damage.

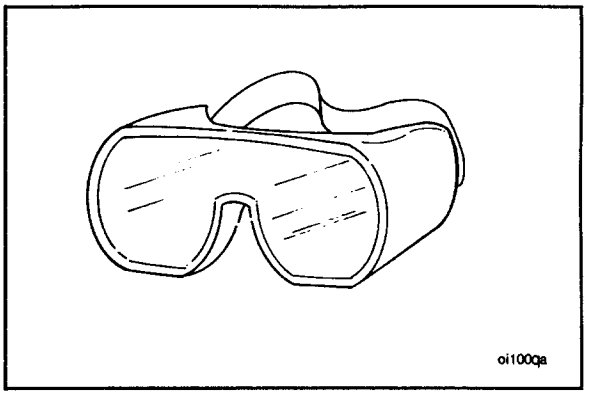

5. Use a rotary wire brush to remove the carbon ring from the top of the cylinder liner. Use a scraper that has an aluminum blade if a rotary wire brush is **not** available.
6. Use lint-free paper to remove all the broken wire bristles and loose carbon from the cylinders.

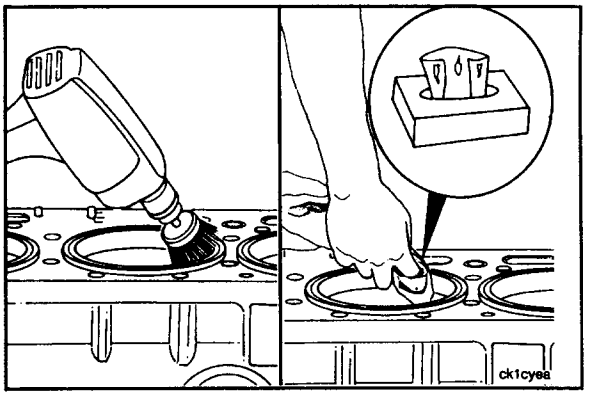

7. Loosen the connecting rod capscrews.

NOTE: Do **not** remove the capscrews from the rods.

8. Use a rubber hammer to hit the connecting rod capscrews to loosen the cap from the dowel in the connecting rod.

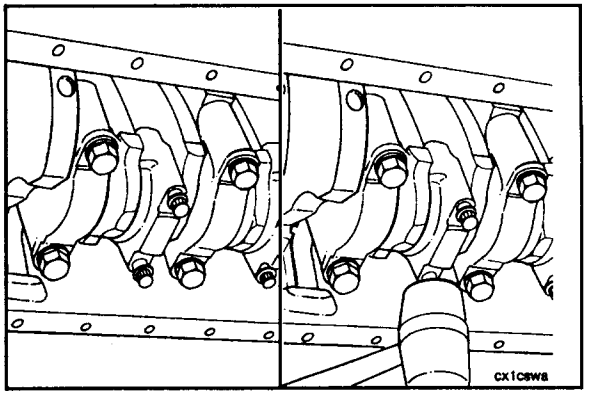

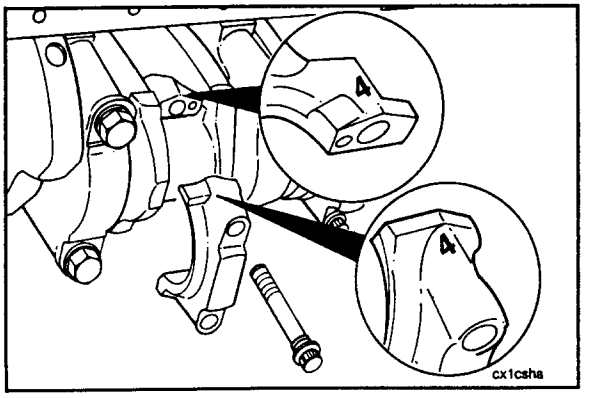

9. Check to see if the connecting rod and the cap have matching numbers stamped on them and that they are in the correct cylinder location.

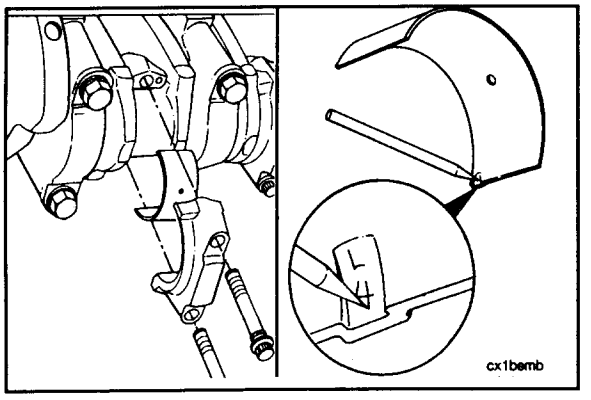

10. Remove the connecting rod capscrews.
11. Remove the rod caps.
12. Remove the lower rod bearings.
13. Mark the cylinder number and the letter "L" in the flat surface of the bearing tang.

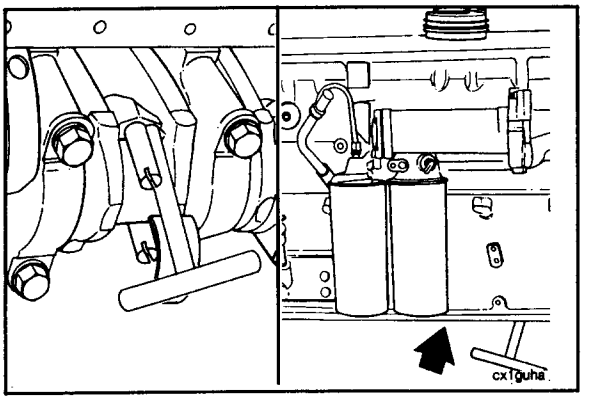

14. Install two Part No. 3375601 Connecting Rod Guide Pins.
15. Use a "T-handle" piston pusher to push the rod away from the crankshaft.

NOTE: Push the rod until the piston rings are outside of the top of the cylinder liner.

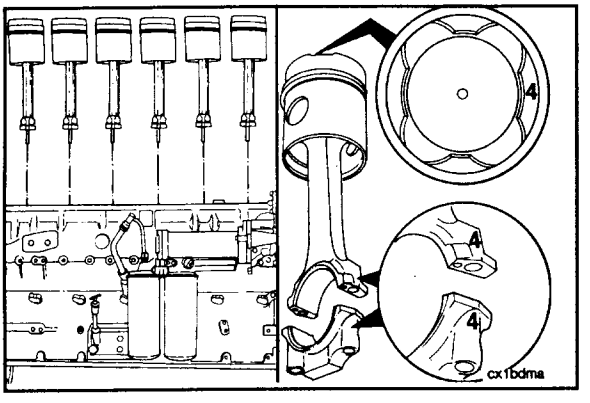

16. Remove the piston and rod assembly.

NOTE: To prevent increased wear, the piston and connecting rod assemblies **must** be installed in the same cylinder number from which they were removed. If the piston is **not** previously marked, mark the cylinder number on the top of each piston on the camshaft side as the assembly is removed.

NOTE: The pistons **must** have the cylinder numbers stamped on the piston top toward the camshaft side of the engine.

17. Place the rod and piston assemblies in a container to protect them from damage.

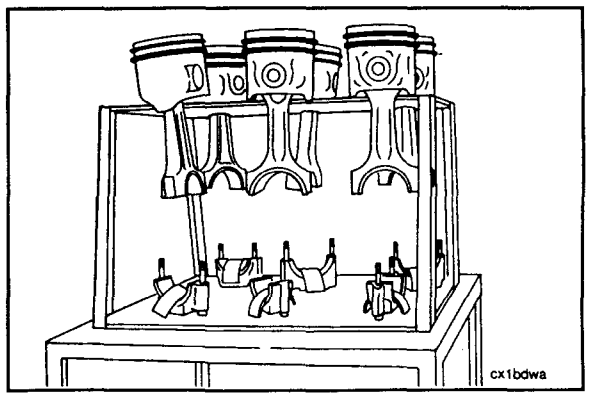

NOTE: The cylinder number is stamped on the rod and the cap. When the rods and the caps are installed in the engine, the numbers on the rods and the caps **must** match and be installed on the same side of the engine.

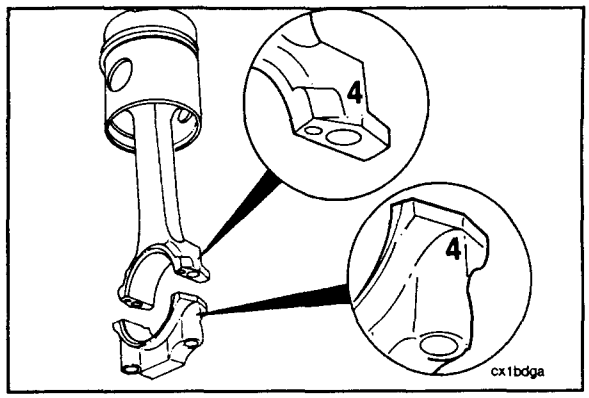

18. Remove the upper rod bearing.
19. Mark the cylinder number and the letter "U" in the flat surface of the bearing tang.

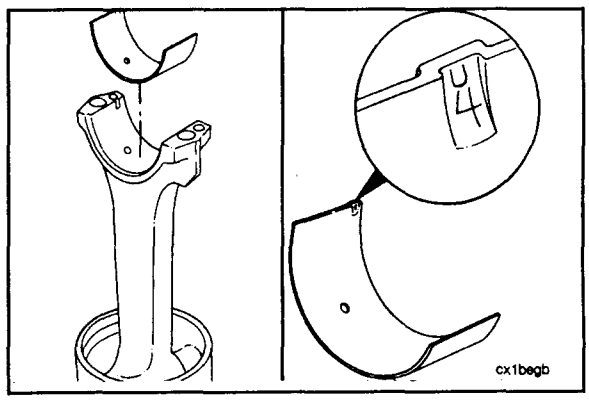

20. Use Part No. ST-763 Piston Ring Expander to remove the piston rings.
21. Place a tag on the rings, and record the cylinder number of the piston on the tag for future reference (if required).

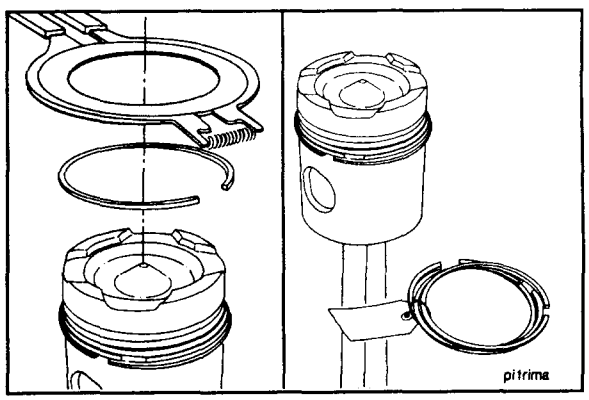

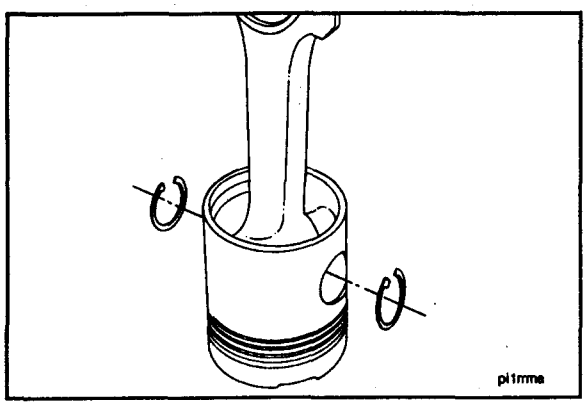

22. Use internal snap ring pliers to remove the snap rings from both sides of the piston.

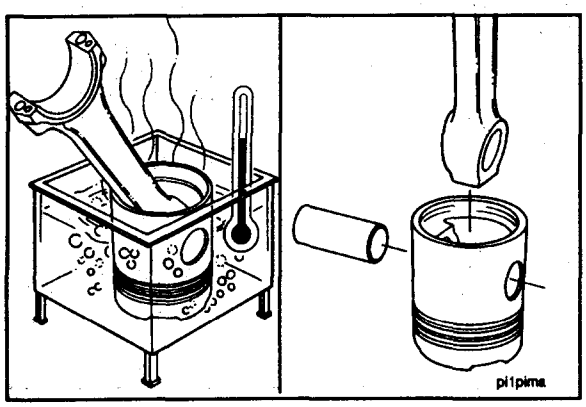

23. Put the piston and rod assembly in a container of water.

Caution: Use insulated gloves to prevent injury from the boiling water or heated piston.

24. Heat the piston in boiling water for 15 minutes.

Caution: Do not use a hammer to remove the piston pins. The piston can distort and cause the piston to seize in the liner.

25. Remove the piston from the water, and use a blunt tool to push the piston pin from the piston and rod assembly.

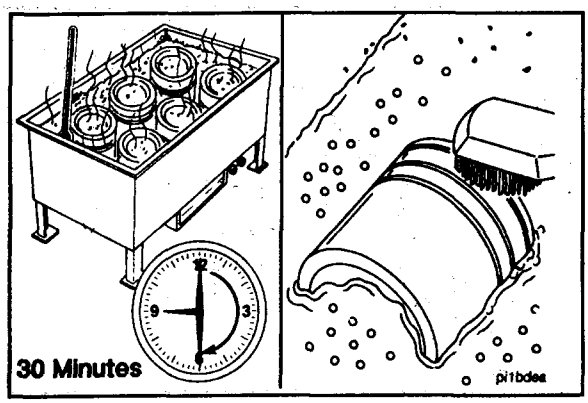

Clean and Inspect

Caution: To avoid damage to the pistons, make sure the cleaning solvent is approved for aluminum.

1. Allow the pistons to soak for a minimum of 30 minutes in a tank containing an approved cleaning solvent for aluminum.
2. Use a hot, soapy solution and a non-metallic brush to remove carbon deposits.

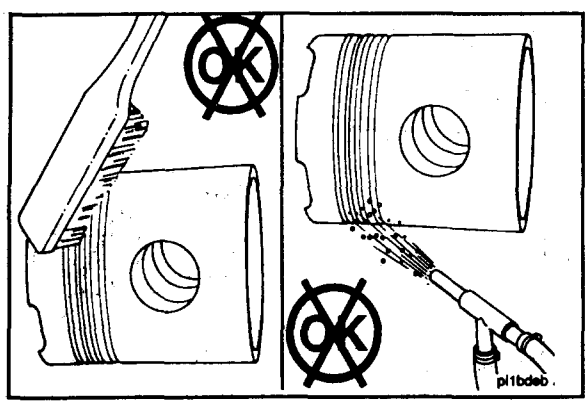

Caution: Do not use a metal brush. A metal brush will damage the piston ring grooves. Do not use glass beads to clean the grooves. Walnut shell blasting may be used on grooves with a ni-resist insert and on the dome or crown of the piston. Use the minimum effective pressure and do not concentrate the spray in one area for an extended period of time. Do not use glass beads or walnut shell blasting on the aluminum grooves or pin bores. This can damage the pin bore surface finish or prevent the rings from seating correctly in the ring grooves.

3. Steam clean the pistons, and dry with compressed air.

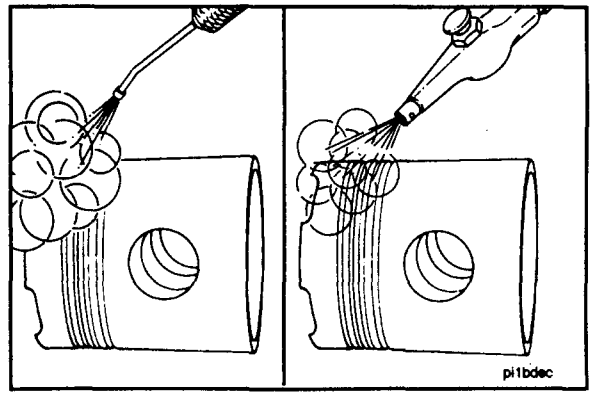

4. Visually inspect the piston bowl, pin bore, and skirt for cracks or damage.

NOTE: Do **not** use pistons with dome cracks larger than one-half (1/2) the rim width or with cracks which extend over the rim toward the ni-resist insert.

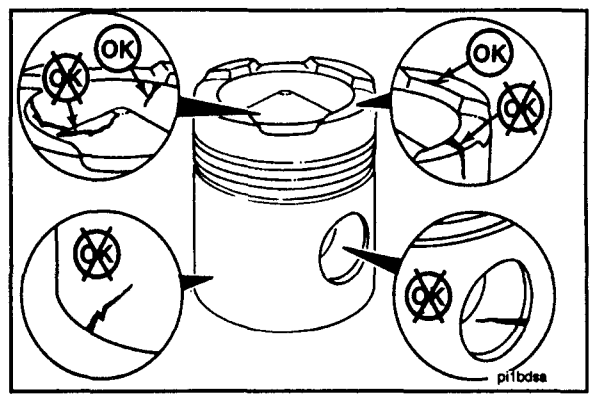

5. Use Part No. ST-560 Piston Ring Groove Wear Gauge to inspect the top and second grooves.

NOTE: The widest part (shoulder) of the tool **must not** come in contact with the piston. Replace the piston if the shoulder touches the piston.

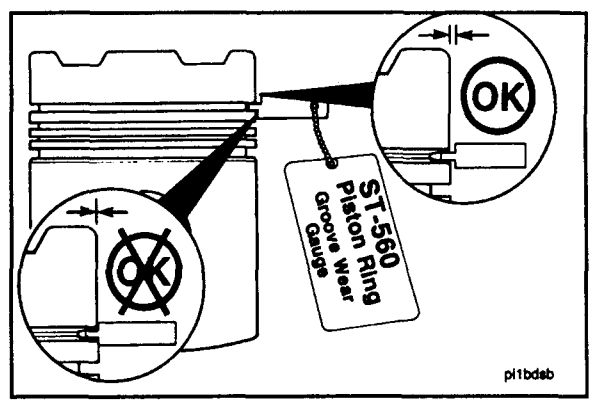

6. Hold a new ring in the groove. Install a 0.152 mm [0.006-inch] feeler gauge. If the feeler gauge enters the groove without resistance, there is too much wear. Replace the piston.

NOTE: The ring groove can be inspected with a new ring and a feeler gauge.

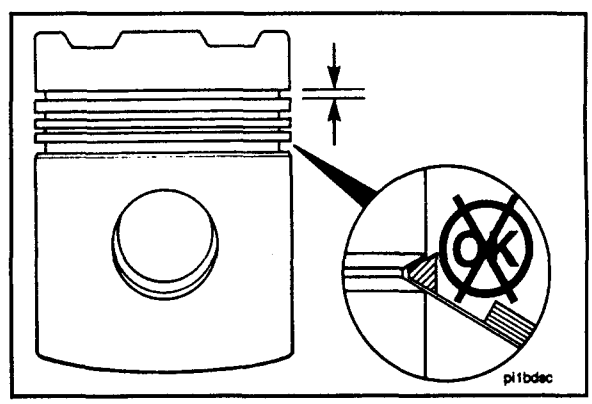

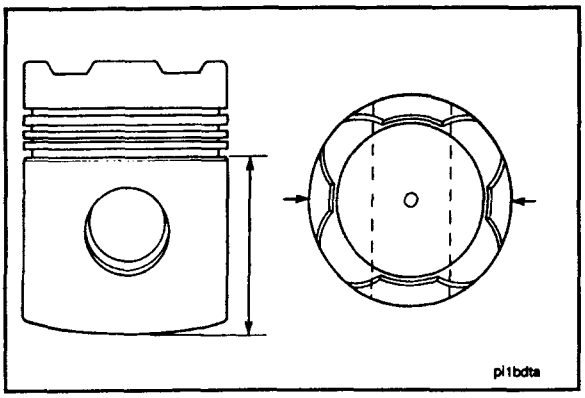

7. Measure the outside diameter of the piston as follows:
   a. Measure at right angles to the piston pin bore.
   b. Piston temperature **must** be between 21°C [70°F] to 32°C [90°F].
   c. Replace pistons that measure less than 139.27 mm [5.483 inches] outside diameter.

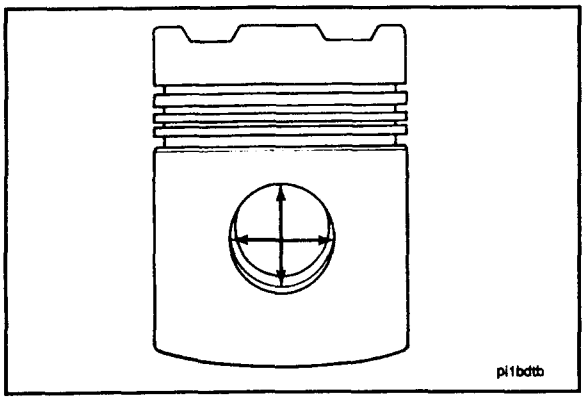

8. Measure the piston pin bore when the piston temperature is at 20°C [68°F].

Piston Pin Bore		
mm		in
50.762	MIN	1.9985
50.800	MAX	2.0000

NOTE: Add 0.013 mm [0.0005-inch] to the bore inside diameter per 5°C [10°F] temperature rise up to 32°C [90°F].

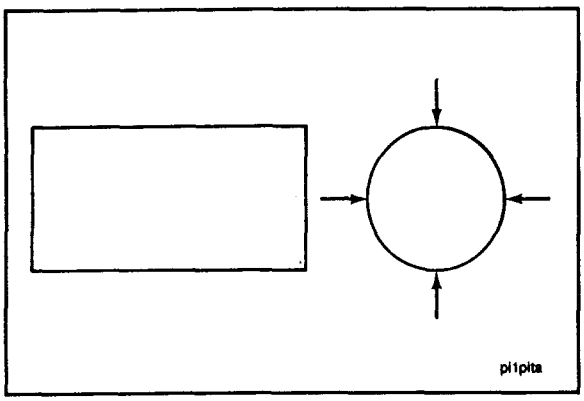

9. Visually inspect the piston pin for scratches, grooves, or other damage.
10. Measure the piston pin outside diameter.

Piston Pin Outside Diameter		
mm		in
50.762	MIN	1.9985
50.775	MAX	1.9990

NOTE: Discard the piston pin if it is more than 0.03 mm [0.001-inch] out of round.

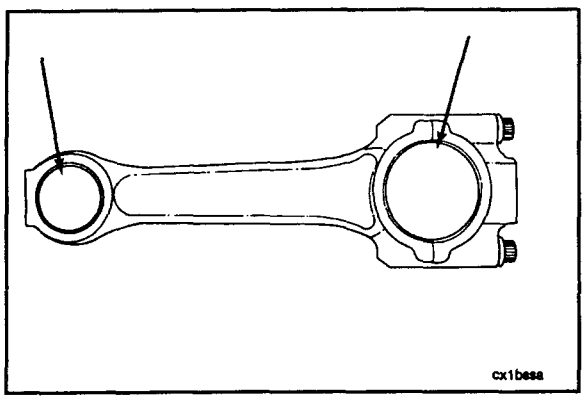

11. Inspect the connecting rod pin bushing bore and the crankshaft bore. Refer to Procedure 7-23.

12. To check the ring gap, install the new piston rings in the cylinder liner in which they will be used.
13. Use the top part of the piston to position the ring in the liner correctly.

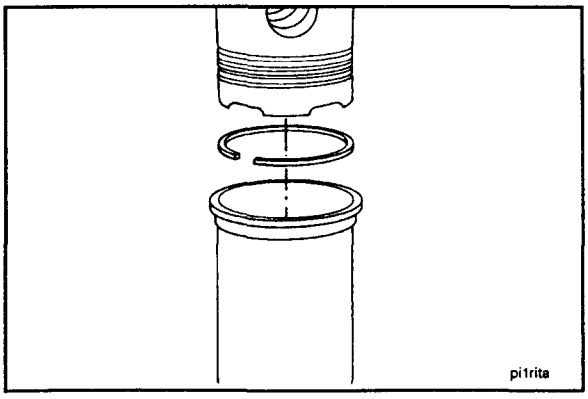

14. Use a feeler gauge to inspect the ring gap. Replace the ring if it does **not** meet the following specifications:

Piston Ring Gap

Position	MIN	MAX
Top	0.43 mm [0.017-inch]	0.68 mm [0.027-inch]
Second	0.51 mm [0.020-inch]	0.76 mm [0.030-inch]
Third	0.48 mm [0.019-inch]	0.74 mm [0.029-inch]
Oil	0.25 mm [0.010-inch]	0.64 mm [0.025-inch]

NOTE: Add 0.08 mm [0.003-inch] to the maximum limit for each 0.03 mm [0.001-inch] wear in the cylinder liner wall.

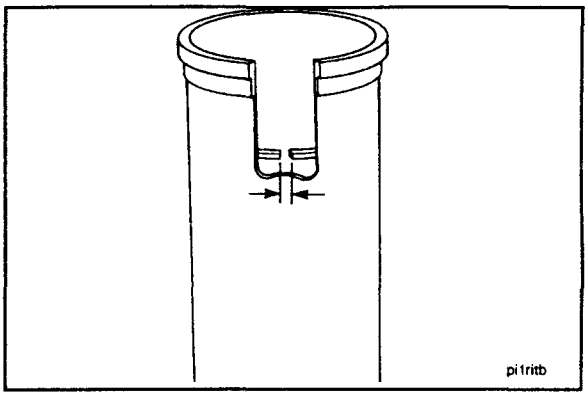

Install

Piston Pin

NOTE: The cylinder block and all parts **must** be clean before assembly. Refer to Procedure 7-24 "Cylinder Liners - Replace (Clean and Inspect)" to inspect the cylinder liners for reuse.

1. Install a new snap ring in the snap ring groove of the piston pin bore at each piston.
2. Heat the pistons in boiling water for 15 minutes or in an oven for 30 minutes at 100°C [212°F].

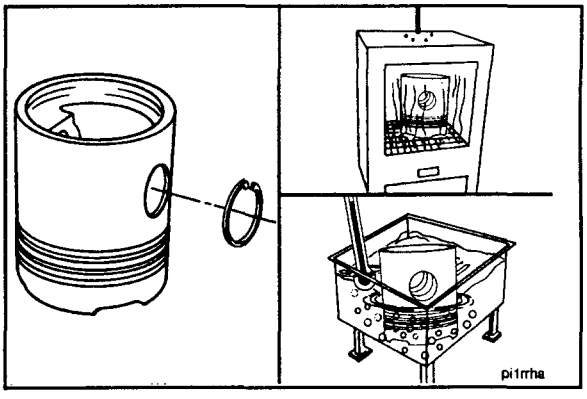

3. Use clean 15W-40 oil to lubricate the connecting rod piston pin bore and the piston pin.

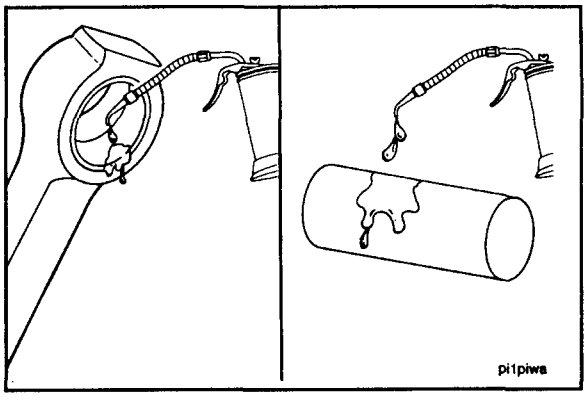

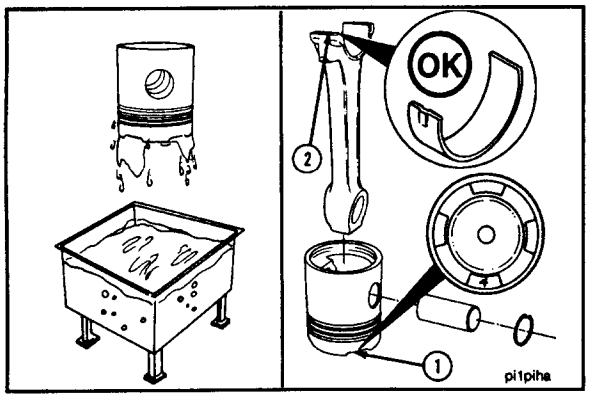

Caution: Use insulated gloves to prevent injury from the boiling water or the heated piston.

4. Remove the piston from the water or the oven.
5. Align the pin bore of the rod with the pin bore of the piston, and install the piston pin. Do **not** use a hammer to install the piston pin. The piston will be damaged.

NOTE: The cylinder number on the piston top (1) **must** be toward the bearing tang (2) side of the rod.

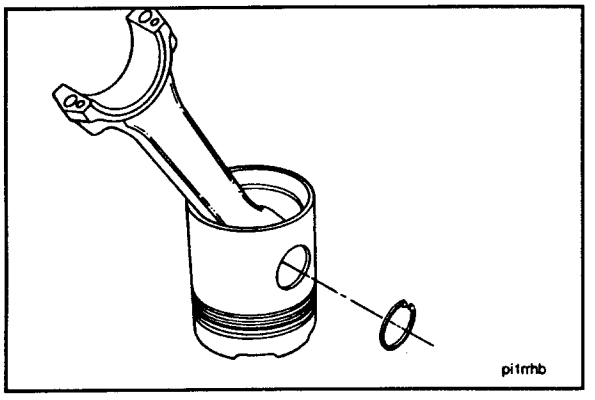

6. Install a new snap ring in the second piston pin bore snap ring groove. The snap ring **must** be seated completely in the snap ring groove.

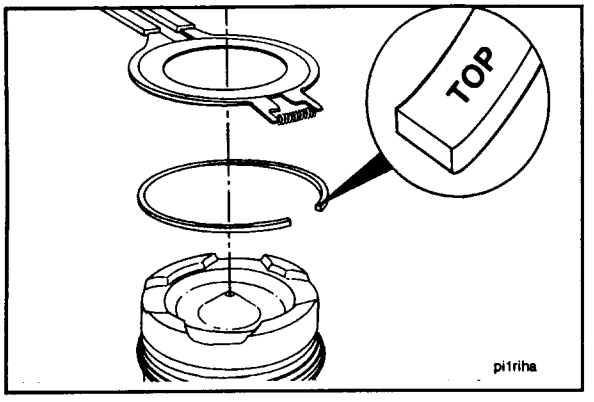

Piston Rings

1. Use Part No. ST-763 Piston Ring Expander to install the piston rings, with the part number, mark, or the word "TOP" toward the top of the piston.

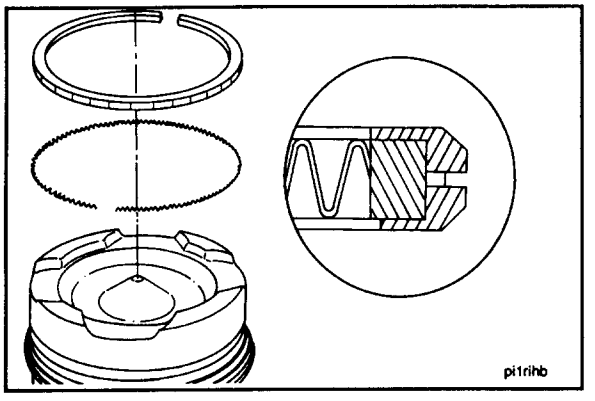

2. A cross-sectioned view of an oil control ring is shown. The two-piece oil control ring **must** be installed with the expander ring gap 180 degrees from the gap of the oil ring.

3. The piston ring shipping package identifies the location of each piston ring by part number. Install the rings in the sequence shown.

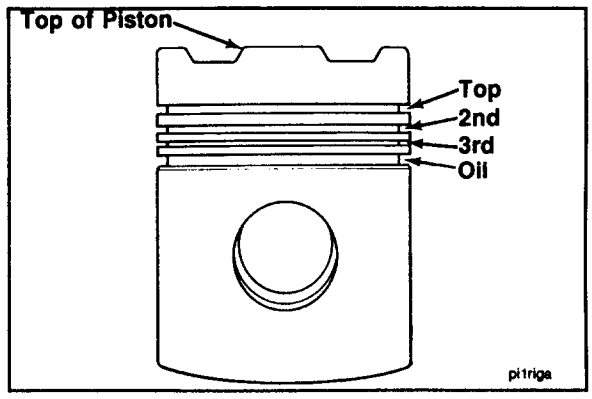

Rod Bearing Shells

1. Install the upper bearing shell in the connecting rod. If used bearing shells are to be installed, each bearing shell **must** be installed in its original location.

NOTE: The tang (1) of the bearing shell **must** be in the slot (2) of the rod.

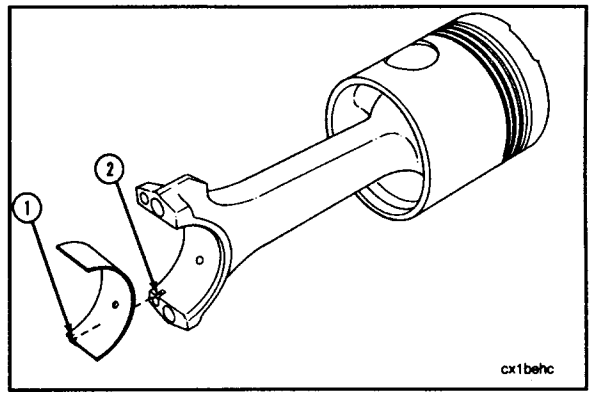

2. Use clean Lubriplate 105 or its equivalent to lubricate the bearing shell.
3. Apply a heavy film of clean 15W-40 oil to the liner.

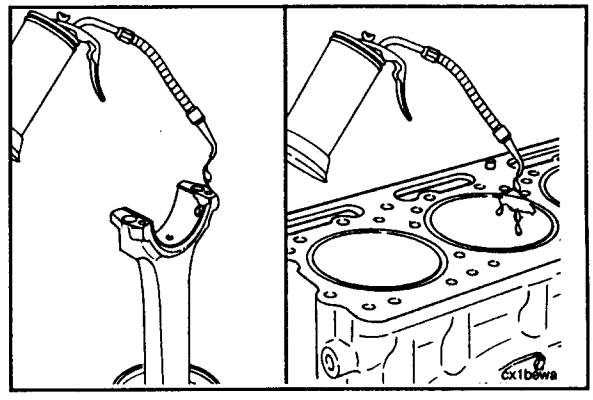

Pistons

1. Put the piston and the ring assembly in a container of clean 15W-40 oil.
2. Remove the piston and the ring assembly from the container. Allow the excess oil to drain from the piston.

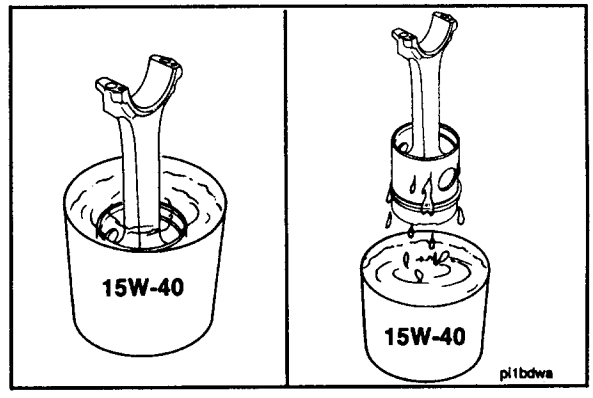

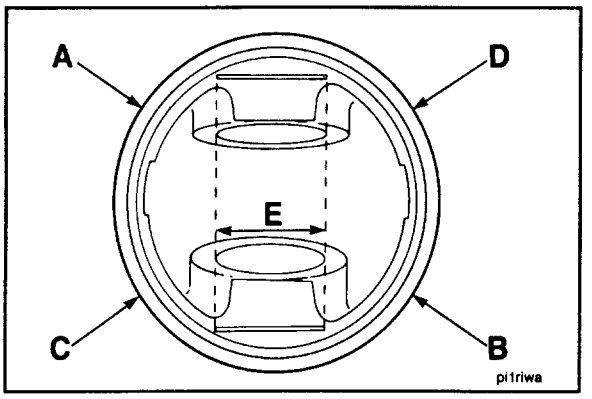

3. Position the ring gaps as follows:
   a. (Top) Ring
   b. Second Ring
   c. Third Ring
   d. (Bottom) Oil Ring
   e. Piston Pin

NOTE: The ring gap of each ring **must not** be aligned with the piston pin or with any other ring.

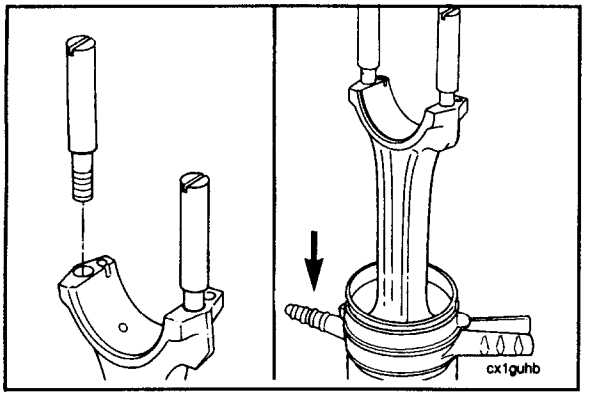

4. Install Part No. 3375601 Connecting Rod Guide Pins.
5. Use Part No. 3375162 Piston Ring Compressor to compress the rings.

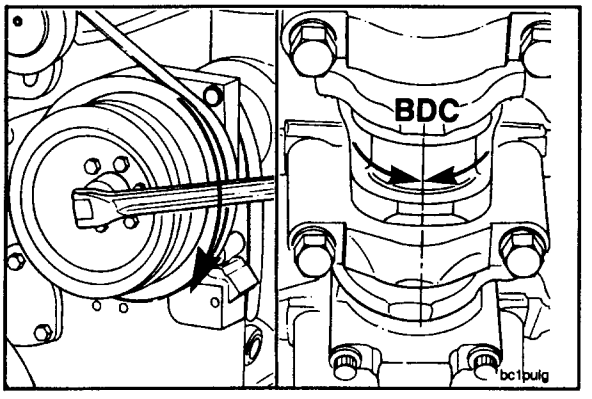

6. Rotate the crankshaft to position the journal for the connecting rod at "BDC" (bottom dead center).

NOTE: Use the accessory drive pulley to rotate the crankshaft.

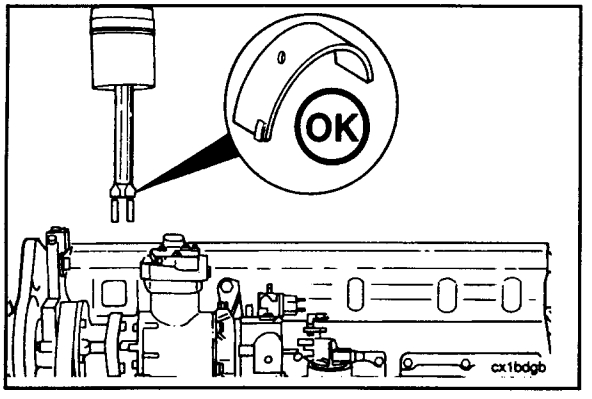

Caution: To avoid piston damage, do not use a metal object to push the piston in the liner.

NOTE: The tang of the connecting rod **must** be toward the camshaft side of the cylinder block.

Caution: Do not use a hammer or equivalent to install the piston in the cylinder liner. The piston rings can be damaged.

7. Install the connecting rod in the cylinder liner, and push the piston down. If the piston does **not** move freely, remove the piston. Inspect for broken or damaged rings.

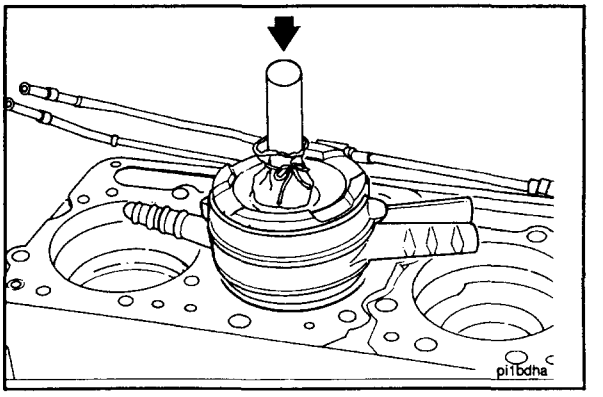

8. Use the guide pins to pull the connecting rod against the crankshaft.
9. Remove the guide pins.

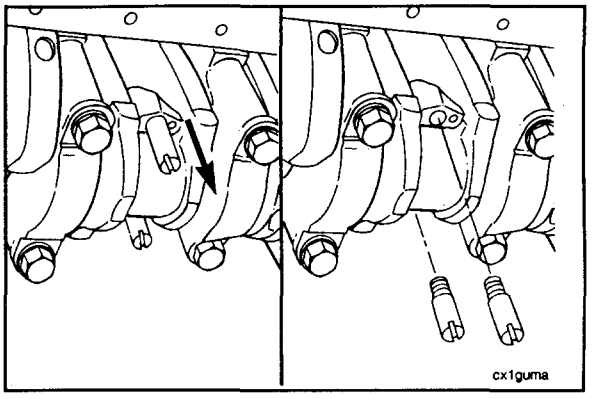

Caution: The rod cap number must match the number on the connecting rod and must be installed with the numbers aligned to prevent damage to the connecting rods and the crankshaft. The slot in the cap and the rod must be toward the camshaft side of the cylinder block.

10. Install the bearing in the connecting rod cap.

NOTE: The tang (2) of the bearing **must** be in the slot (1) of the cap.

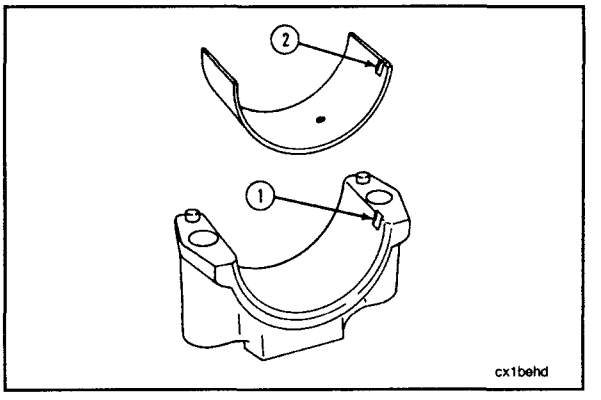

11. Lubricate the bearing shell with Lubriplate 105 or its equivalent. Lubricate the connecting rod capscrew threads and the washer face with 140W oil.

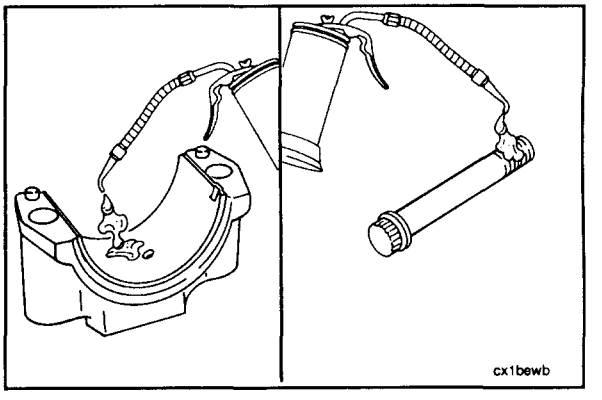

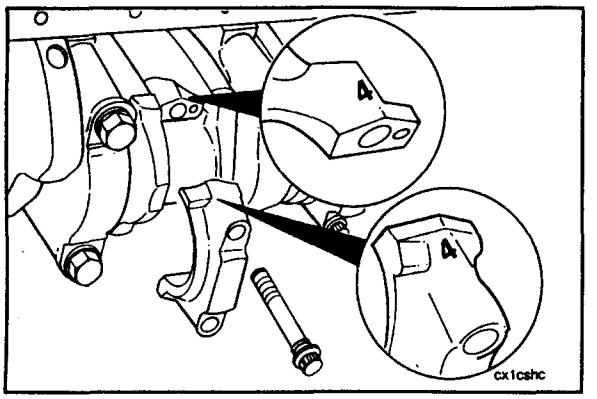

Caution: The connecting rod cap and rod numbers must match.

12. Install the connecting rod caps and the capscrews.
13. Tighten the rod capscrews in alternating sequence to the following torque values:
    a. Tighten to 100 N•m [75 ft-lbs].
    b. Tighten to 230 N•m [170 ft-lbs].

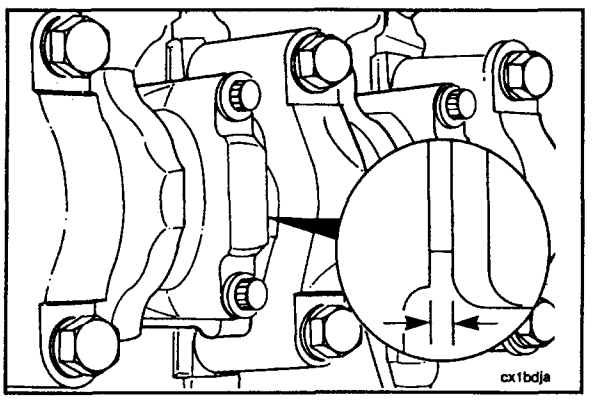

14. Measure the connecting rod side clearance. The side clearance **must** be between 0.114 mm [0.0045-inch] and 3.30 mm [0.13-inch].

NOTE: The connecting rod **must** move freely from side to side on the crankshaft journal. If the rod does **not** move freely, remove the rod cap and make sure the bearing shells are the correct size. Check for dirt or damage on the crankshaft and the bearing shells.

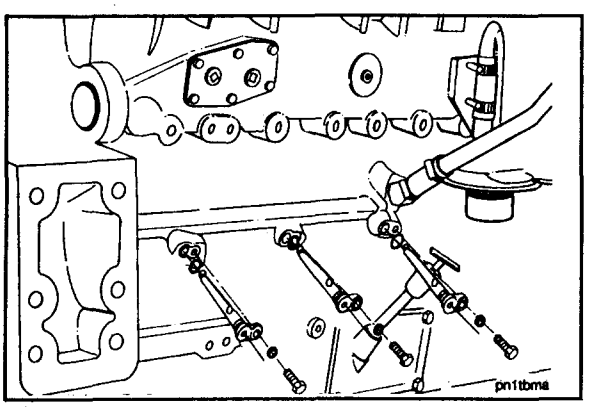

15. Install the piston cooling nozzles. Refer to Procedure 7-19.

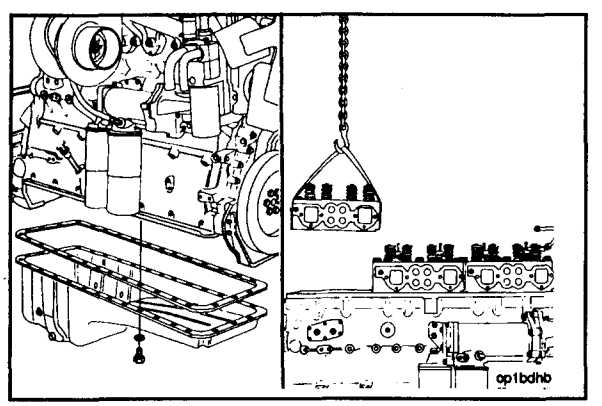

16. Install the lubricating oil pan. Refer to Procedure 2-16.
17. Install the cylinder heads. Refer to Procedure 7-11.

Caution: The lubricating oil system must be primed before operating the engine after any internal engine repairs to avoid internal component damage. Do not prime the system from the bypass filter; the filter will be damaged.

18. Remove the pipe plug from the lubricating oil pump cover.

NOTE: Lubricating oil pumps on Big Cam IV engines are equipped with a 9/16 - 18 UNF Compuchek® coupling nipple. Use Part No. 3376859 Coupler to connect the priming pump to the coupling.

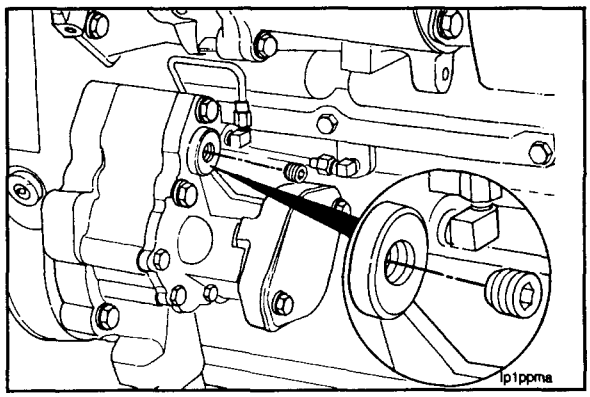

19. Install the priming pump oil supply hose. Use clean 15W-40 lubricating oil out of a bucket or a container. Supply oil to the crossover oil passage.
20. Allow the oil to flow until the oil pressure gauge indicates a maximum pressure of 210 kPa [30 psi] to prime the lubricating oil system.

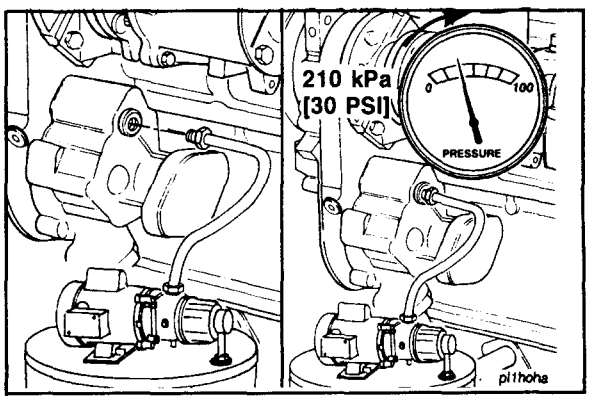

21. Fill the lubricating oil pan. Refer to Procedure 2-10.
22. Operate the engine until it reaches a temperature of 80°C [180°F], and check for leaks.

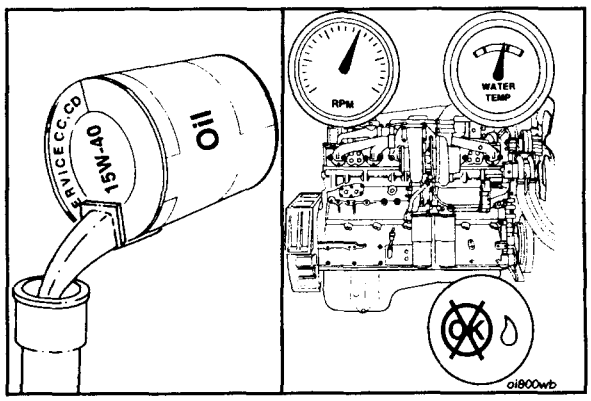

Connecting Rods - Replace (7-23)

Remove

1. Remove the cylinder heads. Refer to Procedure 7-11.
2. Drain the lubricating oil. Refer to Procedure 2-09.

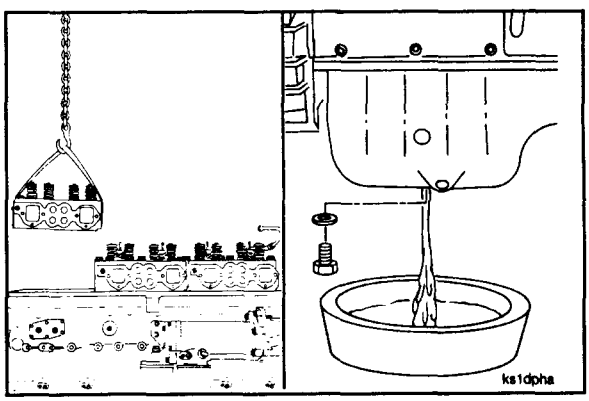

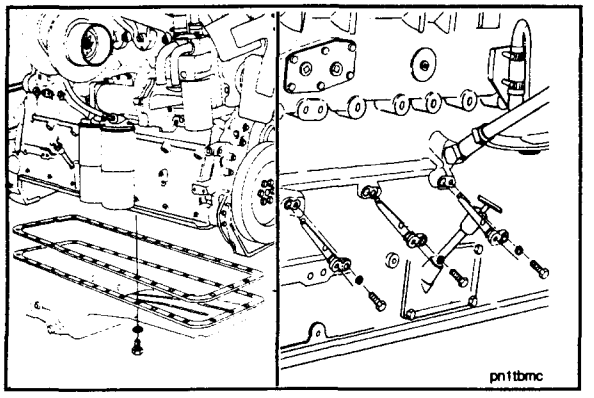

3. Remove the lubricating oil pan. Refer to Procedure 2-16.
4. Remove the piston cooling nozzles. Refer to Procedure 7-19.

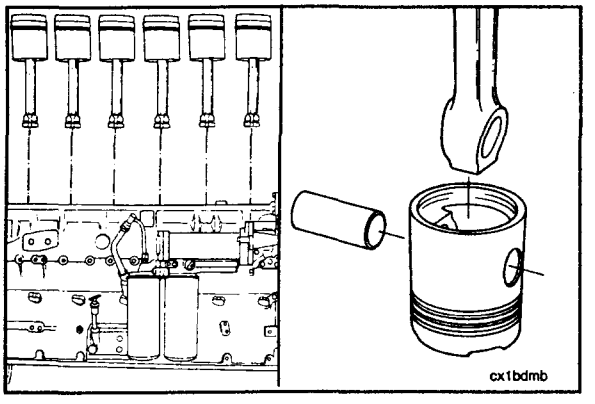

5. Remove the piston and rod assemblies from the engine. Refer to Procedure 7-22.
6. Remove the pistons from the rods. Refer to Procedure 7-22.

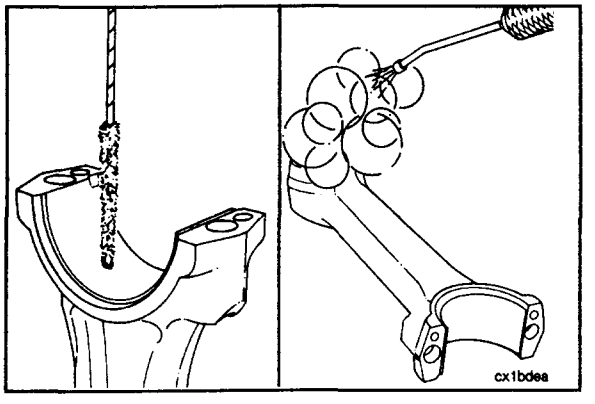

Clean and Inspect

1. Use a nylon bristle brush to clean the oil drillings.
2. Steam clean or use solvent to clean the connecting rods.
3. Dry with compressed air.

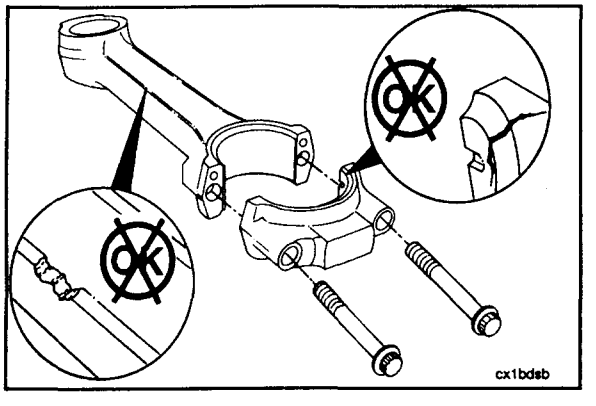

4. Inspect the rods and the caps for damage.
5. Replace the rod if the "I-beam" is nicked or damaged.

6. Visually inspect the rod pin bore bushing for damage or misalignment of the oil passage and the bushing.

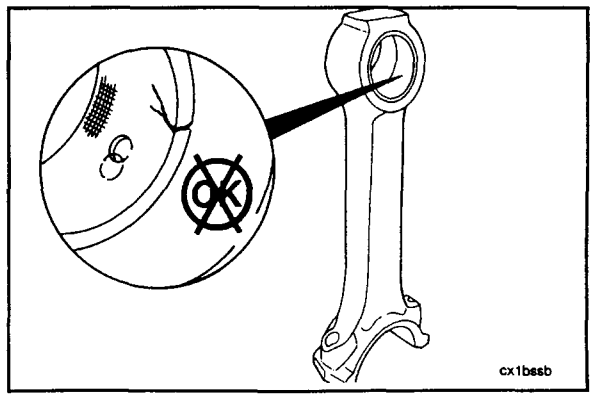

Caution: The rod cap number must match the number on the connecting rod and be installed with the numbers aligned to prevent damage to the connecting rods and the crankshaft.

7. Install the connecting rod caps and the capscrews.
8. Tighten the capscrews in alternating sequence to the following torque values:
   a. Tighten to 100 N•m [75 ft-lbs].
   b. Tighten to 230 N•m [170 ft-lbs].

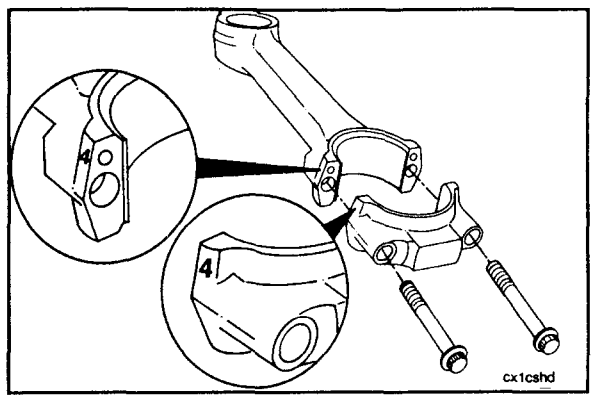

9. Measure the rod crankshaft bore inside diameter.

Connecting Rod Crankshaft Bore I.D.		
mm		in
84.219	MIN	3.3157
84.244	MAX	3.3167

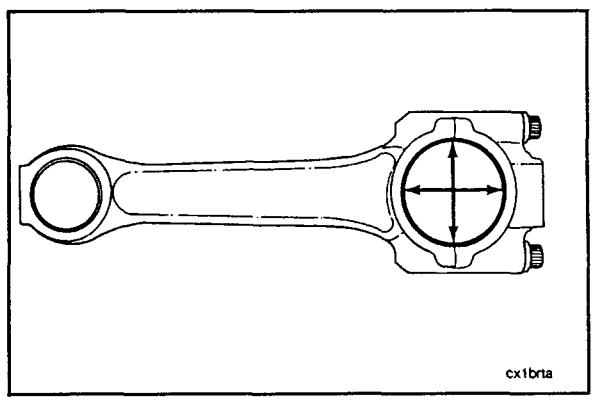

10. Measure the piston pin bushing inside diameter.

Piston Pin Bushing Inside Diameter		
mm		in
50.825	MIN	2.0010
50.856	MAX	2.0022

NOTE: Refer to the "NT Engine Shop Manual" to measure the bend and twist of the rods.

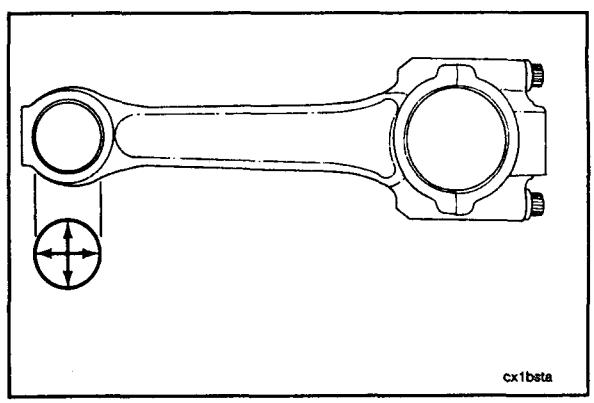

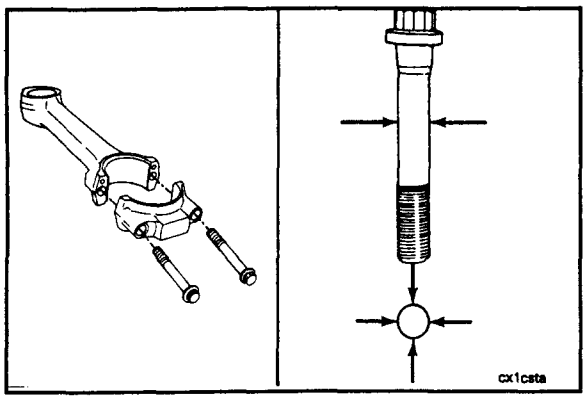

11. Remove the capscrews and the rod caps.
12. Measure the connecting rod capscrew outside diameter.

Connecting Rod Capscrew O.D.		
mm		in
14.81	MIN	0.583
14.99	MAX	0.590

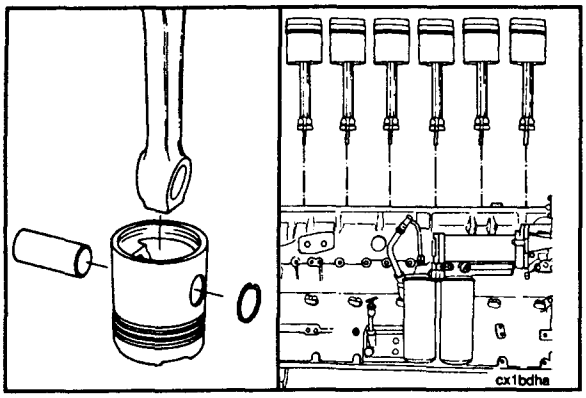

Install

1. Install the pistons on the rods. Refer to Procedure 7-22.
2. Install the piston and rod assemblies. Refer to Procedure 7-22.

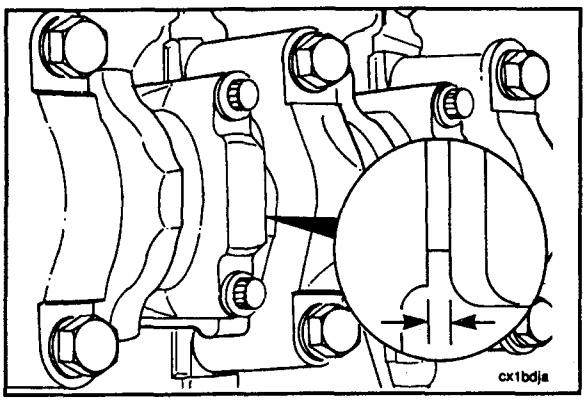

3. Measure the connecting rod side clearance.

Connecting Rod Side Clearance		
mm		in
0.114	MIN	0.0045
0.330	MAX	0.013

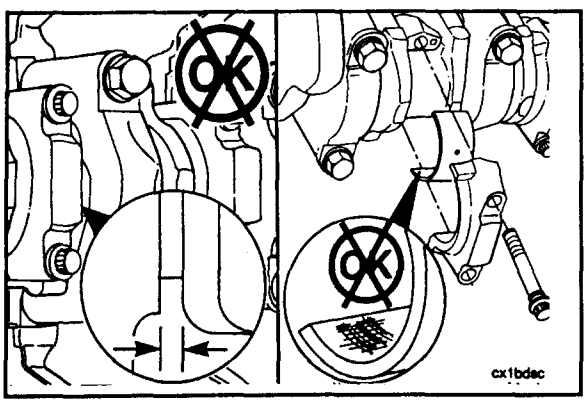

NOTE: If the side clearance does **not** meet these specifications, do the following:

a. Remove the rod caps. Inspect the rod caps for dirt, damage, and correct bearings.

b. Install and tighten the rod caps.

c. Measure the side clearance again.

NOTE: If the side clearance does **not** meet the specifications, the connecting rod **must** be replaced.

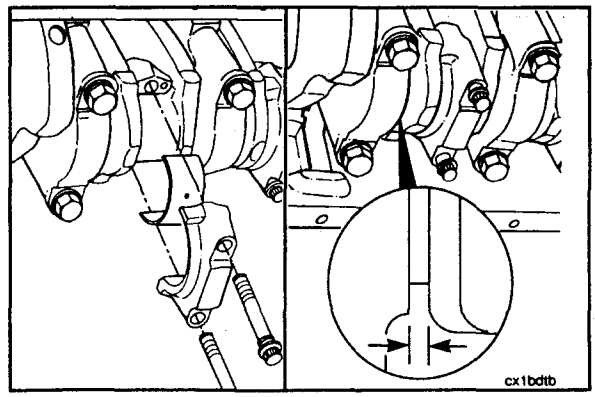

4. Install the piston cooling nozzles. Refer to Procedure 7-19.

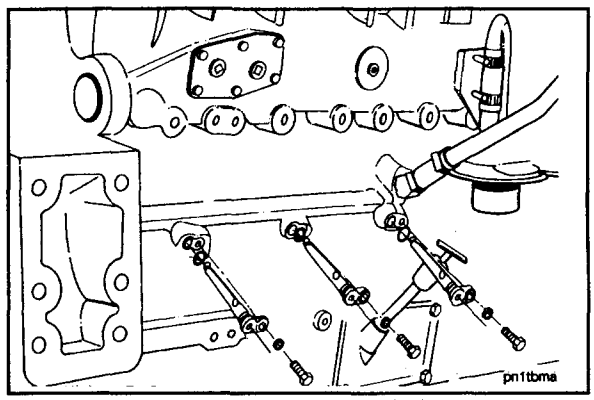

5. Install the lubricating oil pan. Refer to Procedure 2-16.
6. Install the cylinder head. Refer to Procedure 7-11.

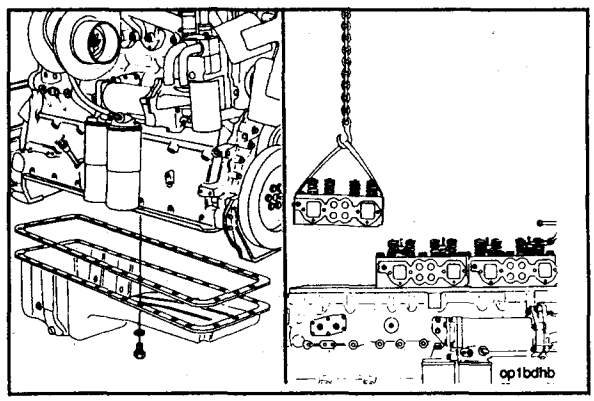

Caution: The lubricating oil system must be primed before operating the engine after any internal engine repairs to avoid internal component damage. Do not prime the system from the bypass filter; the filter will be damaged.

7. Remove the pipe plug from the lubricating oil pump cover.

NOTE: Lubricating oil pumps on Big Cam IV engines are equipped with a 9/16 - 18 UNF Compuchek® coupling nipple. Use Part No. 3376859 Coupler to connect the priming pump to the coupling.

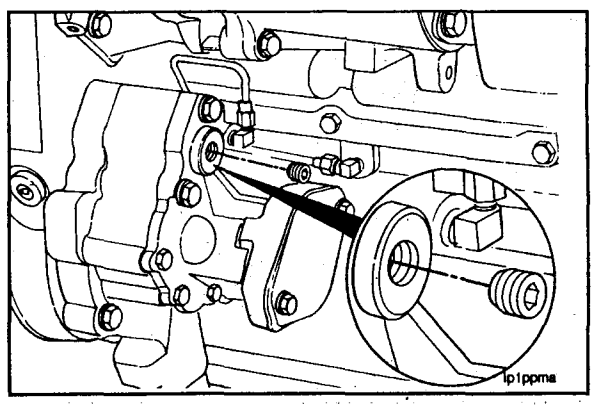

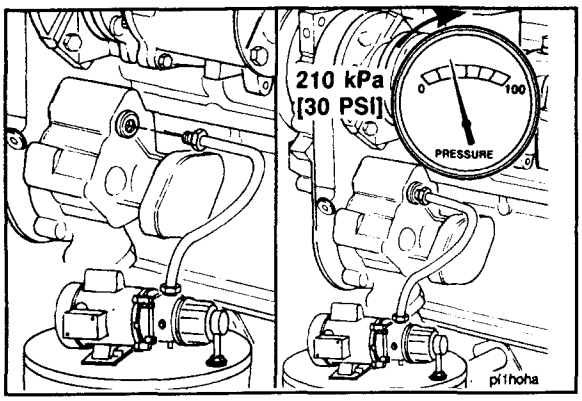

8. Install the priming pump oil supply hose. Use clean 15W-40 lubricating oil out of a bucket or a container. Supply oil to the crossover oil passage.
9. Allow the oil to flow until the oil pressure gauge indicates a maximum pressure of 210 kPa [30 psi] to prime the lubricating oil system.

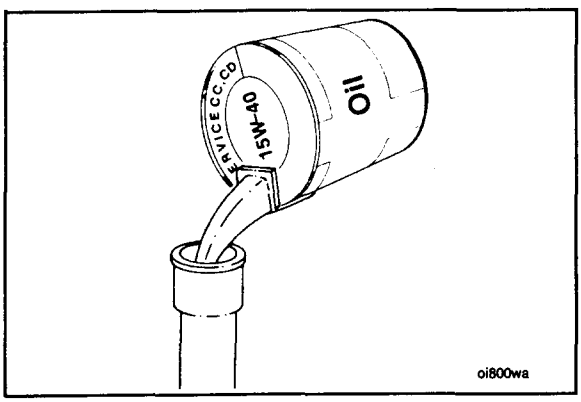

10. Fill the lubricating oil pan. Refer to Procedure 2-10.

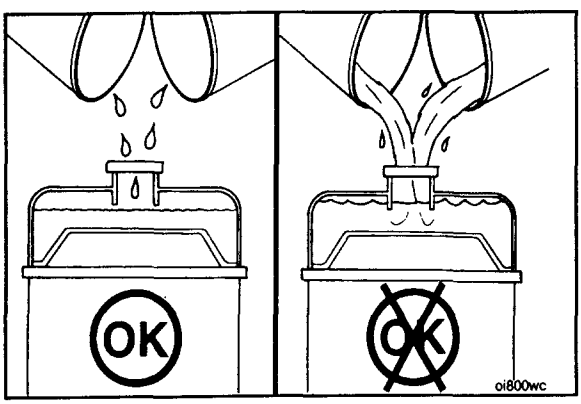

11. Fill the cooling system. Refer to Procedure 1-07.

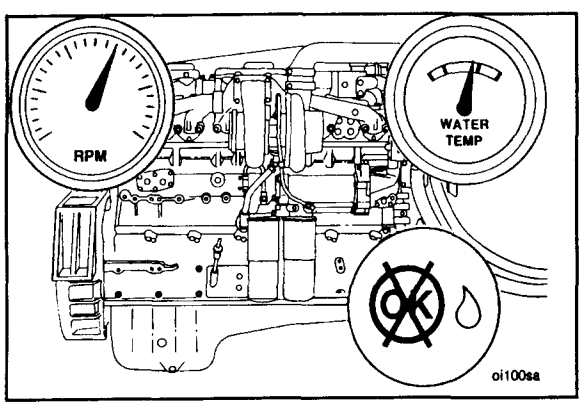

12. Operate the engine until it reaches a water temperature of 80°C [180°F], and check for coolant or lubricating oil leaks.

Cylinder Liners - Replace (7-24)

NOTE: Cummins Engine Company, Inc. does **not** recommend removing the cylinder liners to repair an oil consumption problem if the inside diameters of the liners are within the inspection limits included in this Procedure.

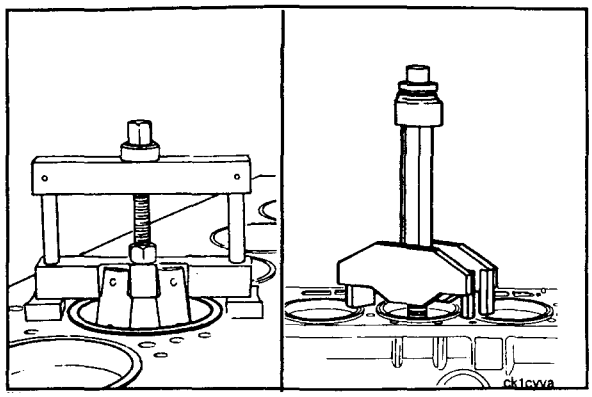

Remove

1. Remove the cylinder head. Refer to Procedure 7-11.
2. Drain the lubricating oil. Refer to Procedure 2-09.

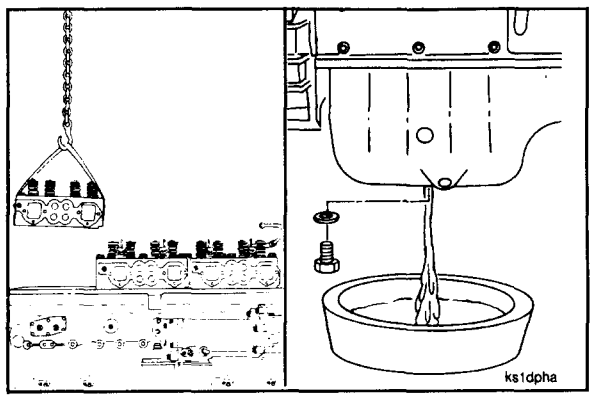

3. Remove the lubricating oil pan. Refer to Procedure 2-16.
4. Remove the piston cooling nozzles. Refer to Procedure 7-19.

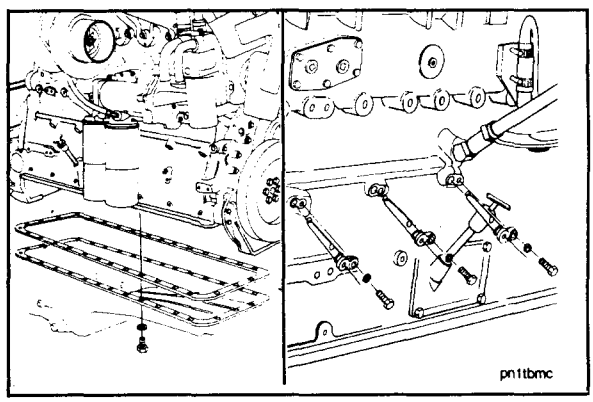

5. Remove the pistons and the connecting rods. Refer to Procedure 7-22.

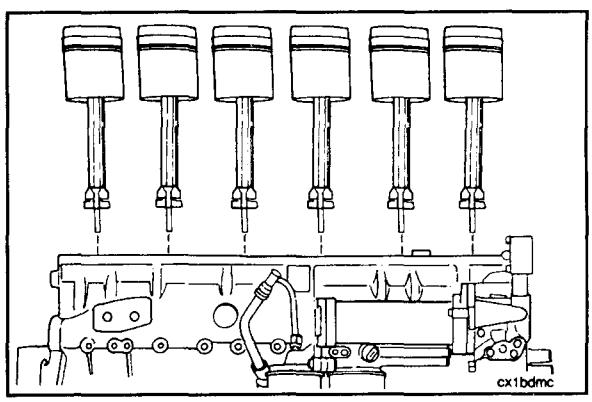

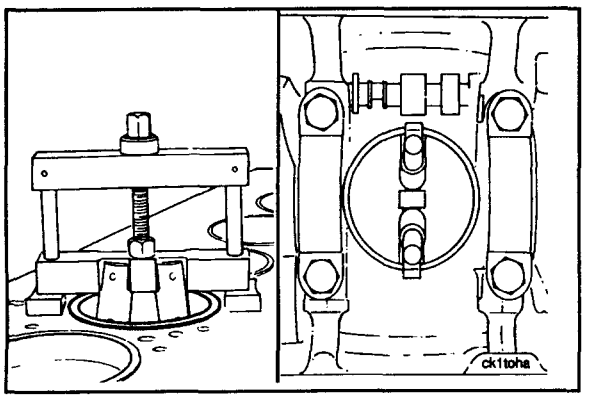

3376015 Liner Puller

Caution: The liner puller must be installed and used as described to avoid damage to the cylinder block.

1. Insert the liner puller in the top of the cylinder block.

NOTE: The liner puller **must** be centered on the top of the cylinder block. The feet on the extension arms **must** be extended below the bottom of the liner.

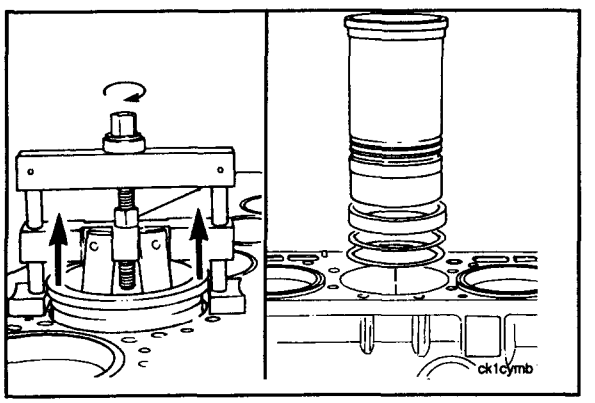

2. Turn the puller jackscrew **clockwise**.
3. Use both hands to remove the liners.
4. Remove and discard the O-rings and the crevice seals.

NOTE: Do **not** discard the shims which may be used under the cylinder liner flange.

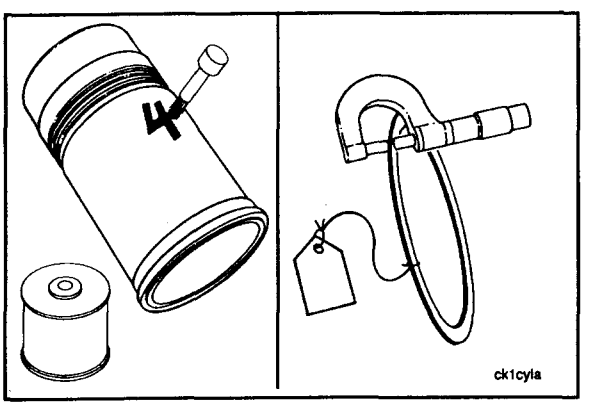

5. Use a liquid metal marker to mark the cylinder number on each liner.
6. If the shims were removed, do the following:
   a. Use a tag to mark the cylinder number.
   b. Measure and record the thickness of the shims used in each cylinder.

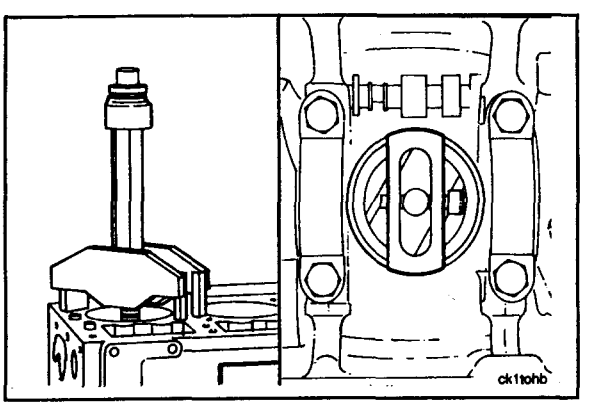

3375629 Liner Puller

Caution: The liner puller must be installed and used as described to avoid damage to the cylinder block.

1. Insert the liner puller in the top of the cylinder block.

NOTE: The liner puller **must** be centered on the top of the cylinder block.

Caution: The puller plate must not overlap the liner outside diameter.

NOTE: The puller plate **must** be parallel to the main bearing saddles.

2. Turn the puller jackscrew **clockwise**.
3. Use both hands to remove the liner.
4. Remove and discard the crevice seals and the O-rings.

NOTE: Do **not** discard the shims which may be used under the liner flange.

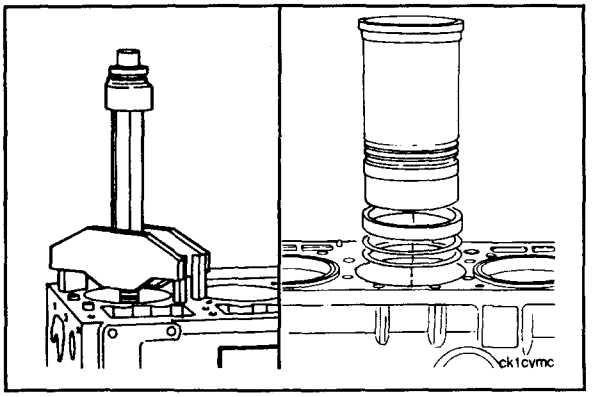

5. Use a liquid metal marker to mark the cylinder number on each liner.
6. If the shims were removed, do the following:
   a. Use a tag to mark the cylinder number.
   b. Measure and record the thickness of the shims used in each cylinder.

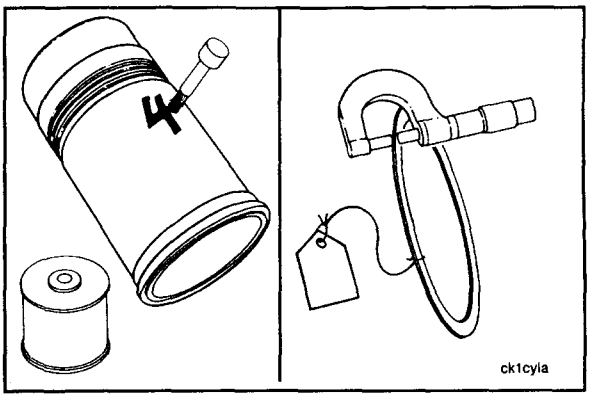

Clean and Inspect

Caution: Do not use a hone, deglazing, or prebrushing to clean the cylinder liners. Abrasives can damage the finish and the pattern and can contaminate the liner.

Warning: Wear eye protection. Make sure the wire brush is rated for the RPM being used if the brush is motor driven.

1. Use a high quality steel wire brush to clean the liner flange seating area.

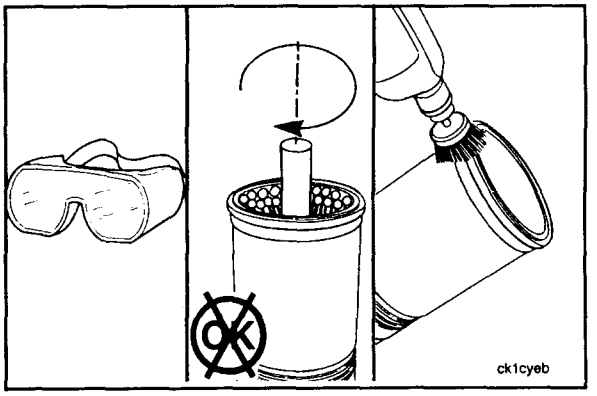

2. Use a non-metallic bristle brush, detergent soap, and warm water to clean the inside diameter.
3. Use a steam cleaner or solvent tank to clean the liners.
4. Dry with compressed air.

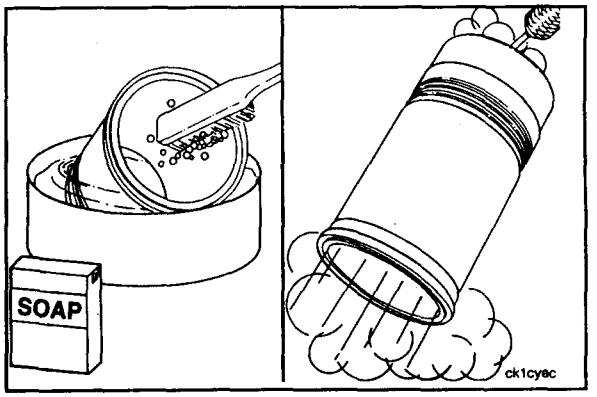

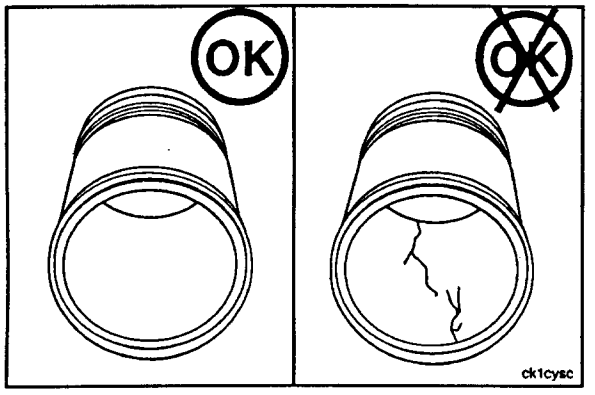

5. Visually inspect the liners for cracks on the inside and the outside diameters.

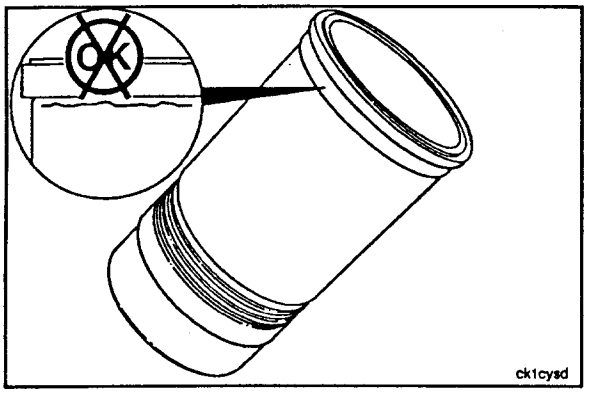

6. Inspect for cracks under the flange.

NOTE: Cracks can also be detected by using either magnetic inspection or the dye method. Refer to the "NT Engine Shop Manual."

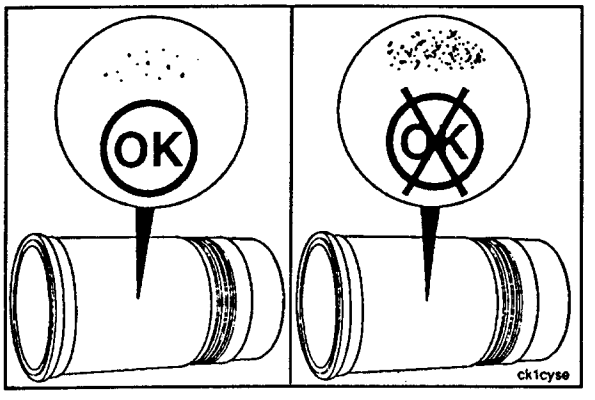

7. Visually inspect the outside diameter for excessive corrosion or pitting. Pits **must not** be more than 1.6 mm [0.063-inch] deep.

8. Replace the liner if the pits are too deep or if the corrosion can **not** be removed with a fine emery cloth.

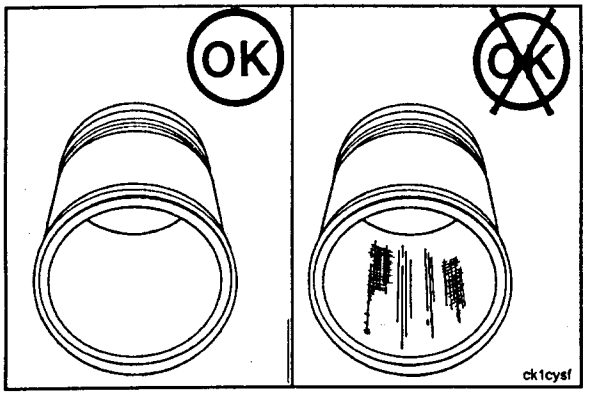

9. Inspect the inside diameters for vertical scratches deep enough to be felt with a fingernail.

NOTE: If a fingernail catches in the scratch, the liner **must** be replaced.

10. Visually inspect the inside diameter for scuffing or scoring.

11. Visually inspect the inside diameter for liner bore polishing.

    A **moderate polish** produces a bright mirror finish in the worn area with traces of the original hone marks or an indication of an etch pattern.

    A **heavy polish** produces a bright mirror finish in the worn area with no traces of hone marks or an etch pattern.

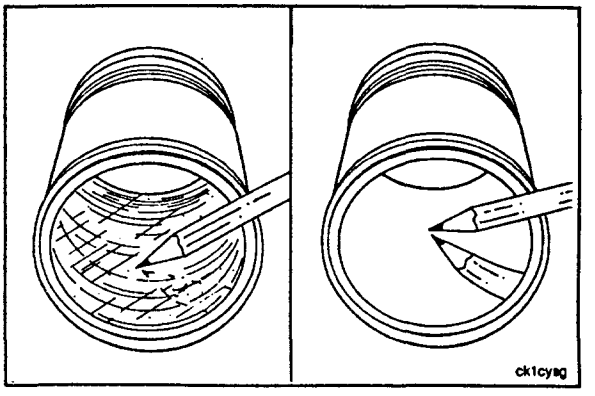

12. Replace the liner if:

    a. A heavy polish is present over 20 percent of the piston ring travel area.

    b. Thirty percent (30%) of the piston ring travel area has both moderate and heavy polish, and one-half (15 percent) is heavy polish.

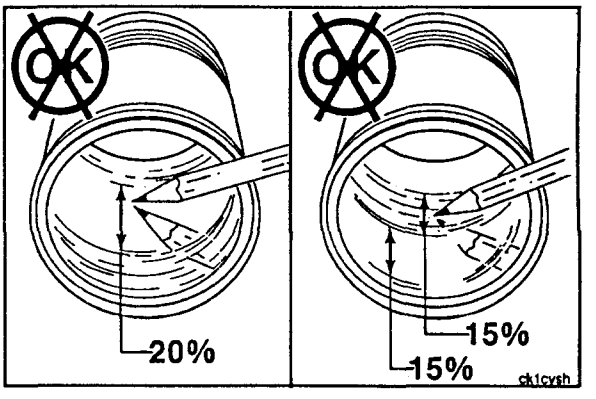

13. Use a dial bore gauge to measure the liner inside diameter in four places 90 degrees apart at the top and the bottom of the piston travel area.

Cylinder Liner Inside Diameter		
mm		in
139.694	MIN	5.4998
139.827	MAX	5.5050

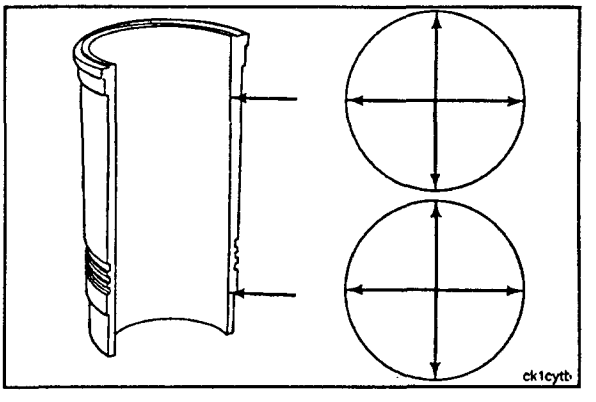

14. Measure the outside diameter of the liner top press fit area.

Liner Outside Diameter (Top Press Fit)			
	mm		in
Standard	166.72	MIN	6.564
	166.77	MAX	6.566
.020 Oversize	167.23	MIN	6.584
	167.28	MAX	6.586

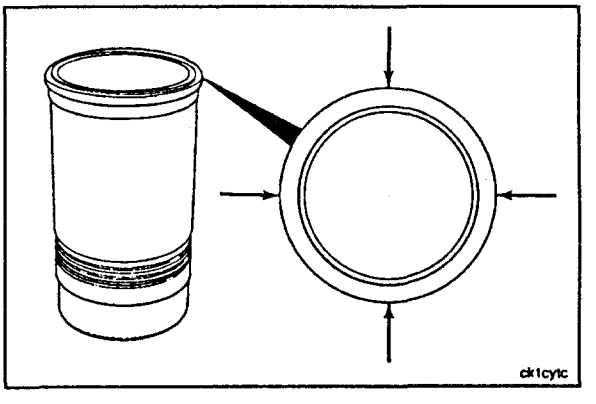

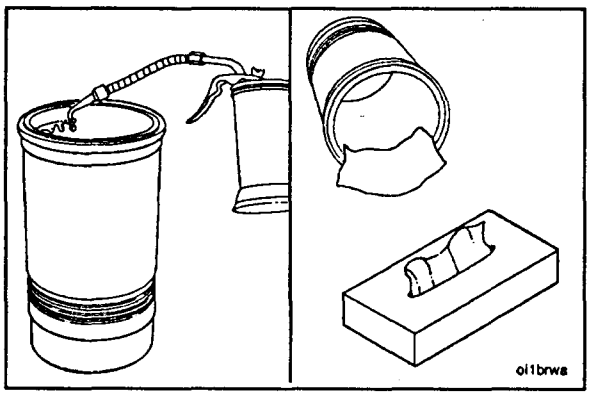

15. Apply a thick film of clean 15W-40 oil to the bores of the liners for final cleaning. Leave the oil on for 5 to 10 minutes.

16. Use a clean, lint-free paper towel--**not cloth**--to wipe the oil from the bores until the black and gray deposits are removed.

Caution: Do not set the liners in an area where dirty air flow can contaminate the liners.

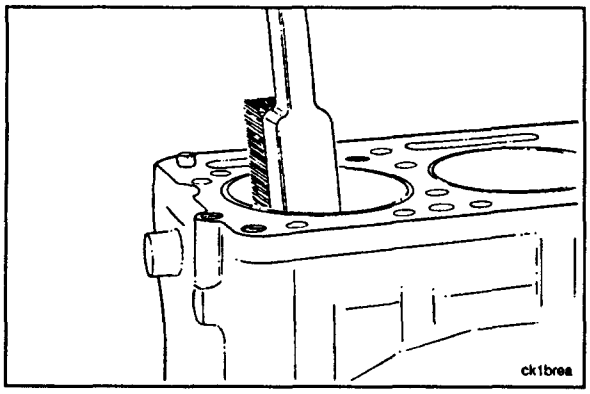

Caution: Naptha and methyl ethyl ketone (MEK) are flammable materials and must be used with care. Do not use starting fluid as a cleaning agent.

17. Inspect the liner counterbore as follows:

    a. Clean the cylinder block counterbores with a suitable hydrocarbon solvent such as naptha, methyl ethyl ketone (MEK) or trichlorethane 1, 1, 1 (methyl chloroform).

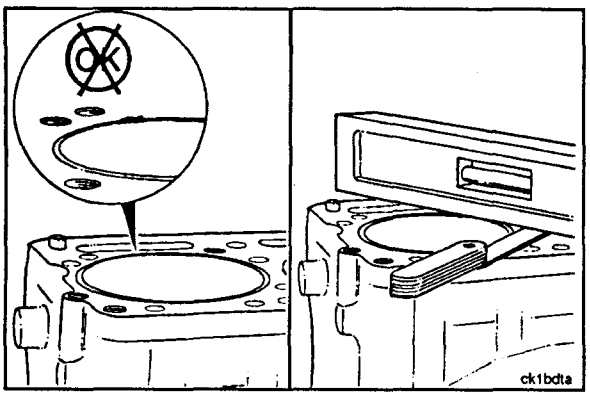

    b. Remove any rough edges.

    c. Clean the cylinder block deck surface.

NOTE: The top of the cylinder block **must** be flat and without damage or distortion. Use a straight edge and a 0.05 mm [0.002-inch] feeler gauge to check the surface.

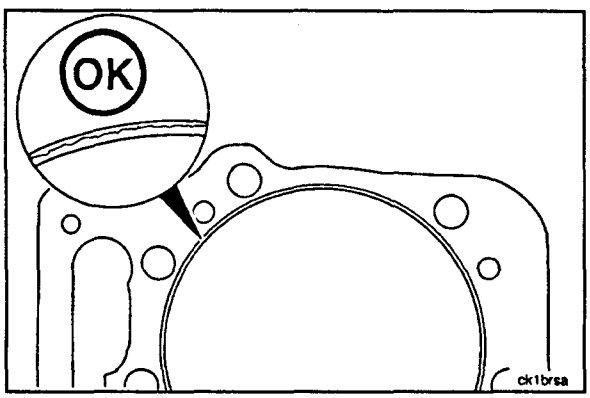

    d. Inspect the liner counterbore for cracks. If cracks are present, the cylinder block may be used without salvage if:

        1) Circumferential cracks do **not** extend into a cylinder head capscrew hole or a water jacket hole.

        2) Circumferential cracks do **not** extend beyond one-half the width of the counterbore ledge from the radius.

NOTE: Do **not** attempt to reuse the cylinder block if radial cracks extend into the water jacket or the lubricating oil or water passages.

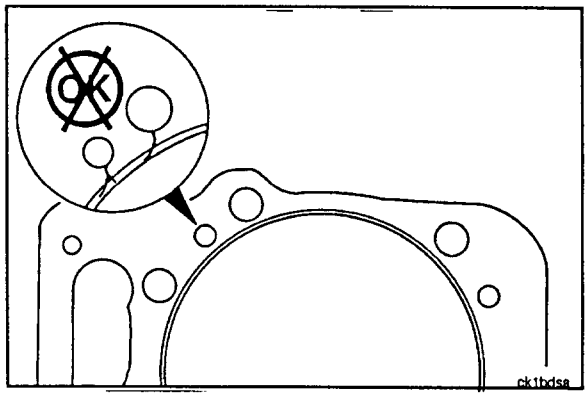

NOTE: Authorized salvage procedures are required if radial cracks extend into the capscrew holes or if circumferential cracks extend more than one-half the width of the counterbore ledge surface from the radius to the sealing edge. Refer to the "Alternative Repair Manual," Bulletin No. 3379035.

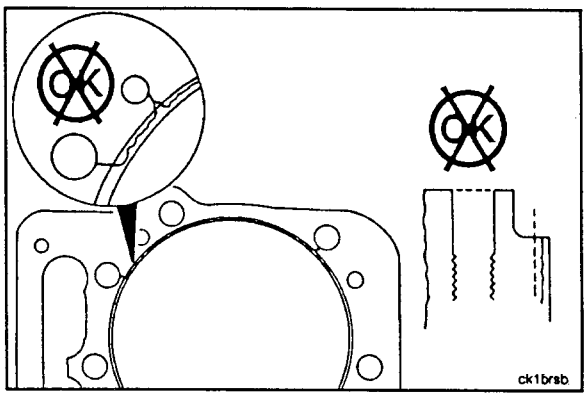

e. Measure the diameter of the counterbore in the liner press fit area as follows:

1) Measure the counterbore from the top deck to 2.54 mm [0.100-inch] below the top deck of the cylinder block.

2) If the counterbore diameter does **not** exceed 166.713 mm [6.5635 inches], standard liners may be used.

3) If the counterbore diameter exceeds 166.713 mm [6.5635 inches] in the press fit area, recut the counterbore and use an oversize liner. Refer to the "NT Engine Shop Manual."

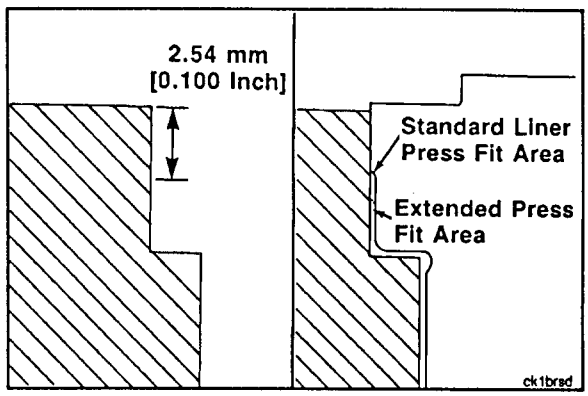

f. Measure the depth of the counterbore as follows:

1) Measure in locations (1) and (2) at four equally spaced points around the bore.

NOTE: Measurement (1) **must** be taken as close to the counterbore wall as possible. Measurement (2) **must** be taken as far from the counterbore wall as possible.

2) There **must not** be more than a total of 0.03 mm [0.001-inch] difference in the measurements around the circumference of the counterbore.

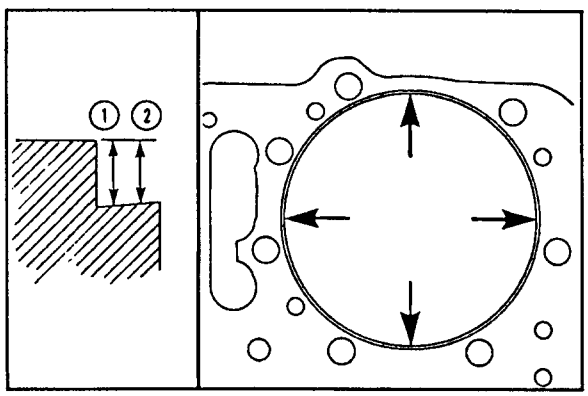

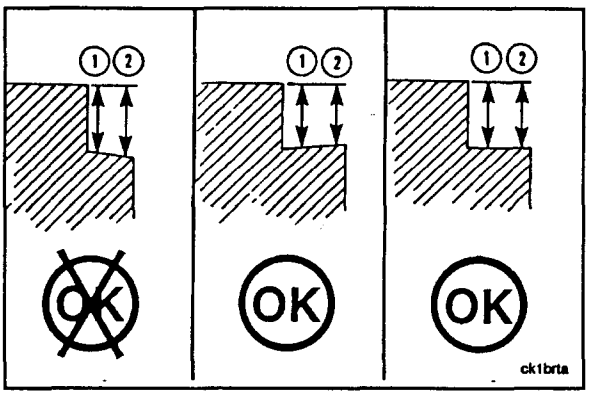

Caution: A concave condition in the counterbore can cause liner breakage.

3) Measurement (2) **must never** exceed measurement (1) (concave) or be less than measurement (1) (convex) by more than 0.036 mm [0.0014-inch].

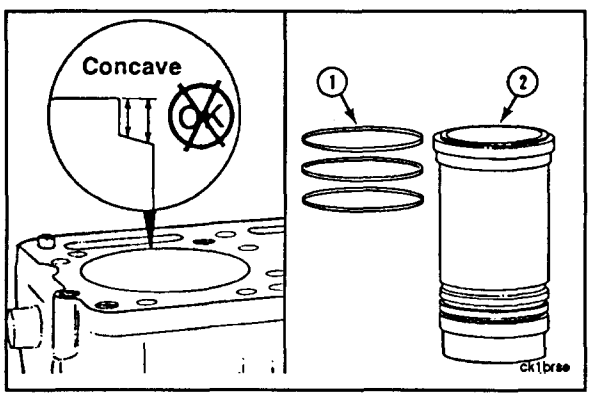

4) If the counterbore depth is more than 10.46 mm [0.412-inch], the counterbore **must** be repaired by installing a sleeve. If there is more than 0.03 mm [0.001-inch] difference in the circumferential measurements in the bore depth and the depth is less than 10.46 mm [0.412-inch], do the following:
   - Recut and use shims (1) to shim the counterbore.
   - Recut the counterbore, and use oversize liners (2).

Refer to the "NT Engine Shop Manual."

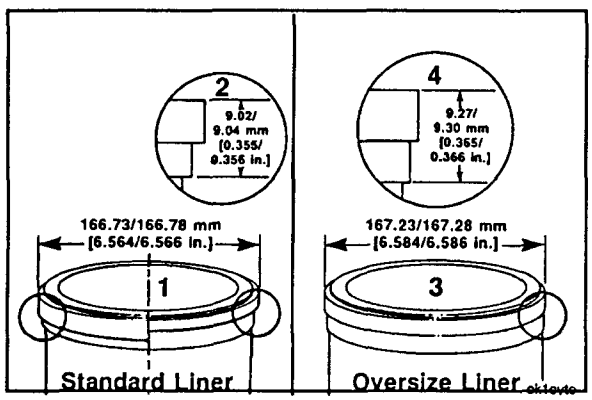

NOTE: Cylinder liners are available in the following sizes:

- Standard liner
  - Standard flange outside diameter (1) and thickness (2).
- Oversize liner:
  - Oversize flange outside diameter (3) (plus 0.51 mm [0.020-inch]) and oversize flange thickness (4) (plus 0.25 mm [0.010-inch]).

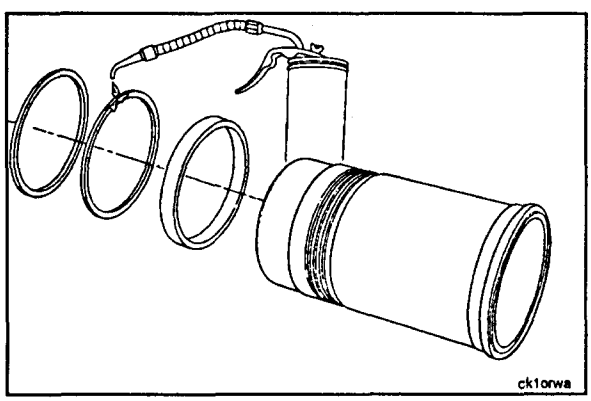

Install

NOTE: Make sure the cylinder block and all parts are clean before assembly. If used liners are being installed again, any shims removed **must** be installed again also.

1. Use vegetable oil to lubricate the new liner O-rings and the crevice seals.

NOTE: Use vegetable oil to lubricate the O-rings. Do **not** use lubricating oil on the O-rings. The O-rings will increase in size after they have been lubricated with oil.

2. Install the O-rings and the crevice seals as follows:
   a. Install the crevice seal (1) in the top groove.
   b. Install the black O-rings (2 and 3) in the center and the bottom grooves.

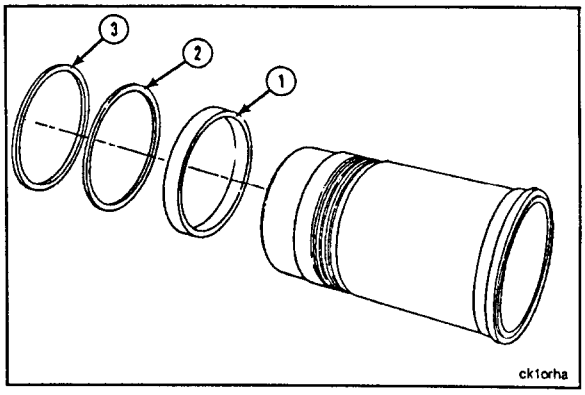

Caution: Do not use an excessive amount of sealant. Excessive sealant can cause problems in the cooling system.

3. Apply a bead of Cummins Sealant, Part No. 3801048, on either the cylinder block counterbore or the liner flange . The liner **must** be installed within 5 minutes after the sealant is applied.

NOTE: The diameter of the bead **must** be at least 3/64-inch and **not** more than 1/16-inch.

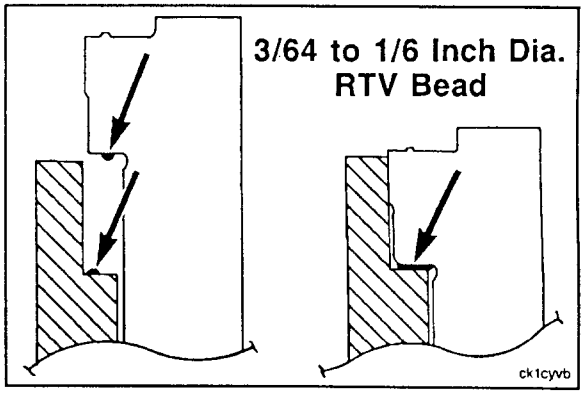

4. Lubricate the crevice seal and the O-rings with vegetable oil. Install the liner in the bore with a quick push.

NOTE: Make sure the oil does **not** touch the counterbore or the liner flange and that the O-rings do **not** move from the grooves.

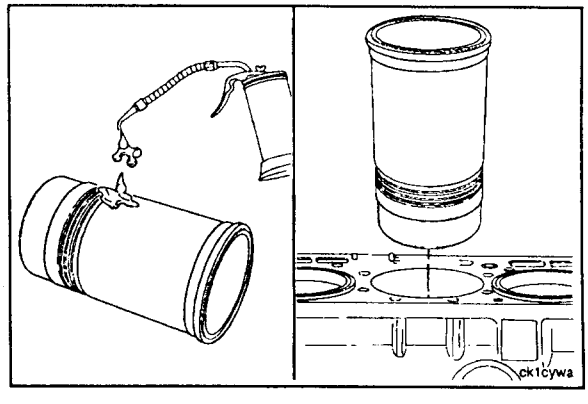

5. Use Part No. ST-1229 Cylinder Liner Driver and a leather mallet to drive the flange of the liner against the counterbore ledge.

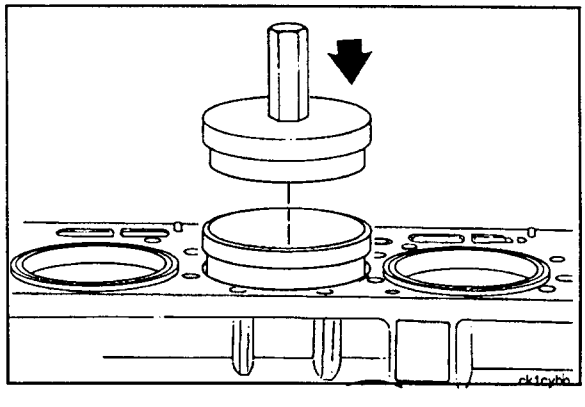

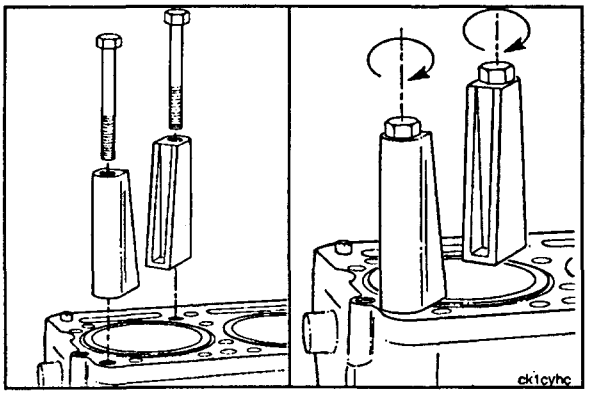

6. Check the protrusion of the cylinder liner as follows:

   a. Install Part No. 3376669 Cylinder Liner Clamp Set.

NOTE: The clamp set uses two cylinder head capscrews. The clamps must be installed 180 degrees from each other to apply equal amounts of pressure on the liner.

   b. Tighten the capscrews to 70 N•m [50 ft-lbs] torque. Do not damage the liner bead.

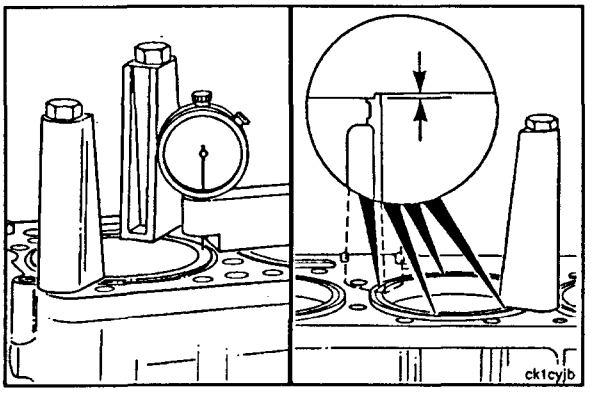

   c. Use Part No. 3376220 Gauge Block to measure the liner protrusion at four points 90 degrees apart. The protrusion must be from 0.08 mm [0.003-inch] to 0.15 mm [0.006-inch].

NOTE: If the liner protrusion is below the specifications, liner shims or oversize cylinder liners may be required. Refer to the "NT Engine Shop Manual" for instructions on repairing the counterbore.

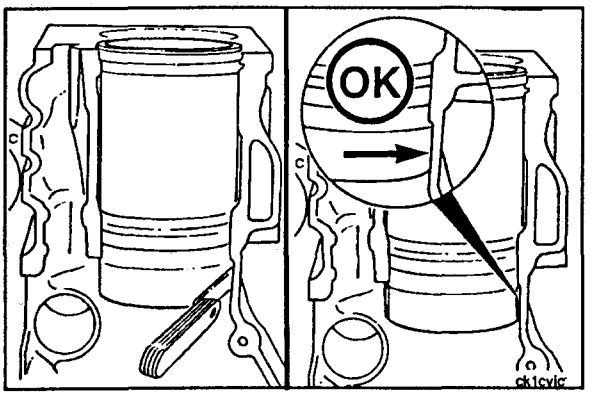

7. Use a feeler gauge to measure the clearance between the liner and the lower liner bore. The clearance must be from 0.05 mm [0.002-inch] to 0.15 mm [0.006-inch].

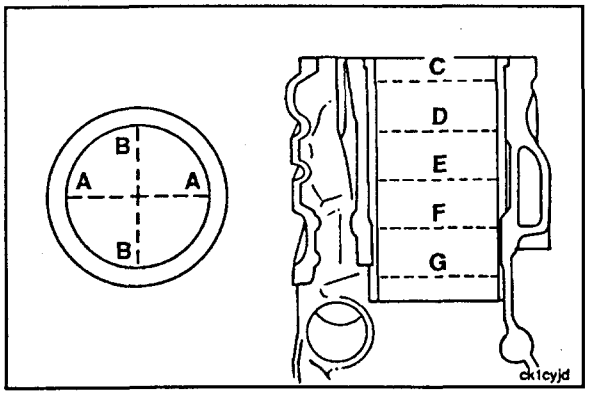

8. Measure the liner bore for out of roundness as follows:

   a. Measure at points "C," "D," "E," "F," and "G."

   b. Measure each point in the direction of "AA" and "BB."

   c. At point "C," the liner can not be more than 0.08 mm [0.003-inch] out of round.

   d. At points "D," "E," "F," and "G," the liner bore can not be more than 0.05 mm [0.002-inch] out of round.

9. Remove the liner from the cylinder block if the specifications are **not** correct for the following:
   a. Liner protrusion.
   b. Liner and cylinder block lower liner bore.
   c. Liner bore out of round.

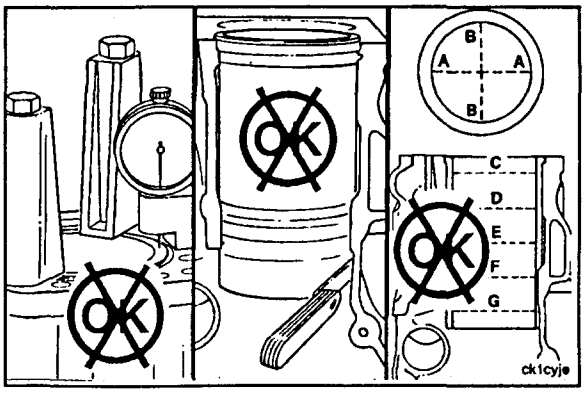

10. Check for twisted liner O-rings.
11. Clean the liner flange and the cylinder block liner counterbore.

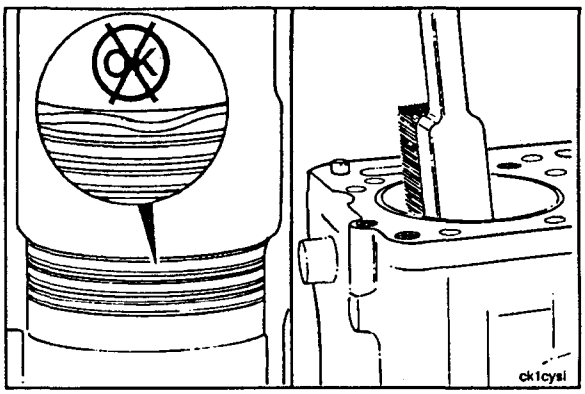

12. Inspect the liner flange for burrs.
13. Inspect the cylinder block liner counterbore for burrs.
14. Remove the burrs, or replace the damaged parts.

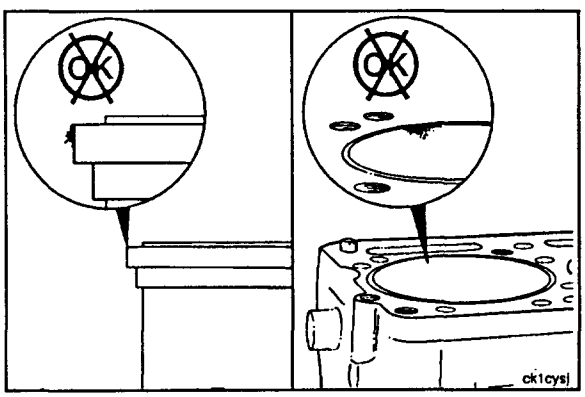

15. Install the liner. Repeat steps No. 1 through No. 8.

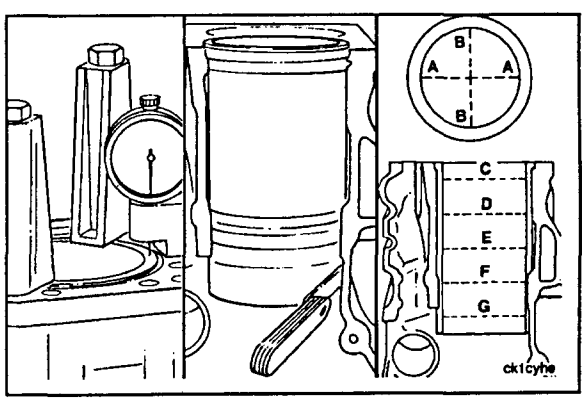

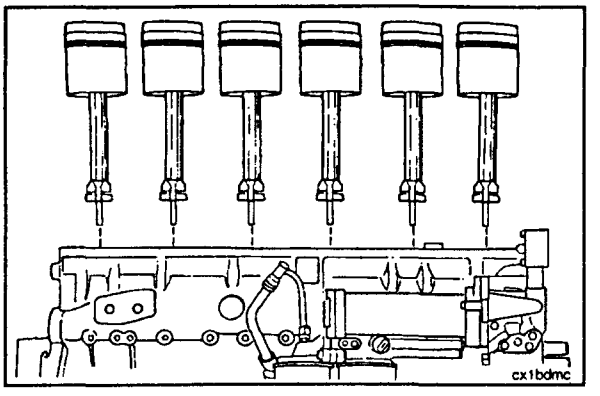

16. Install the pistons and the connecting rods. Refer to Procedure 7-22.

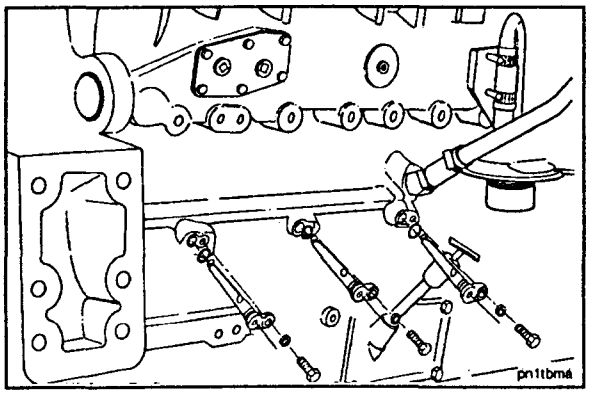

17. Install the piston cooling nozzles. Refer to Procedure 7-19.

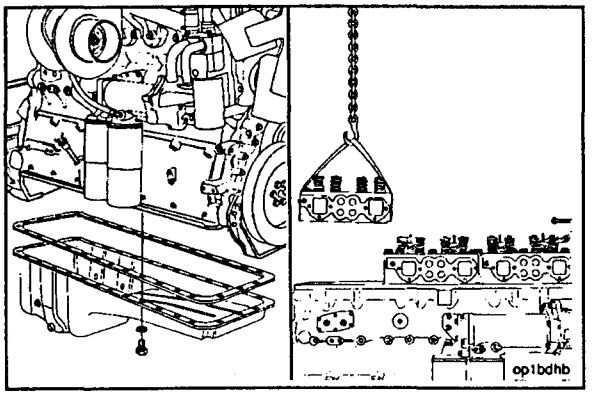

18. Install the lubricating oil pan. Refer to Procedure 2-16.
19. Install the cylinder heads. Refer to Procedure 7-11.

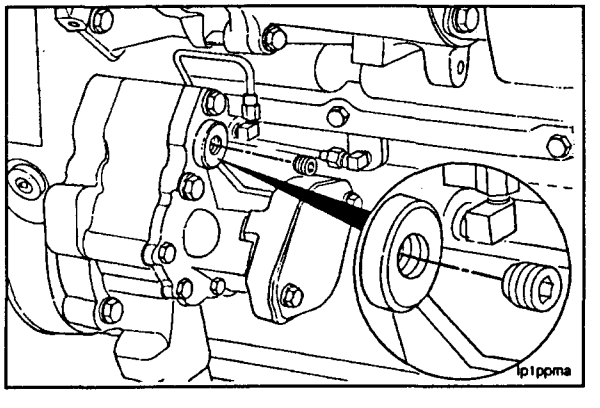

Caution: The lubricating oil system must be primed before operating the engine after any internal engine repairs to avoid internal component damage. Do not prime the system from the bypass filter; the filter will be damaged.

20. Remove the pipe plug from the lubricating oil pump cover.

NOTE: Lubricating oil pumps on Big Cam IV engines are equipped with a 9/16 - 18 UNF Compuchek® coupling nipple. Use Part No. 3376859 Coupler to connect the priming pump to the coupling.

21. Install the priming pump oil supply hose. Use clean 15W-40 lubricating oil out of a bucket or a container. Supply oil to the crossover oil passage.
22. Allow the oil to flow until the oil pressure gauge indicates a maximum pressure of 210 kPa [30 psi] to prime the lubricating oil system.

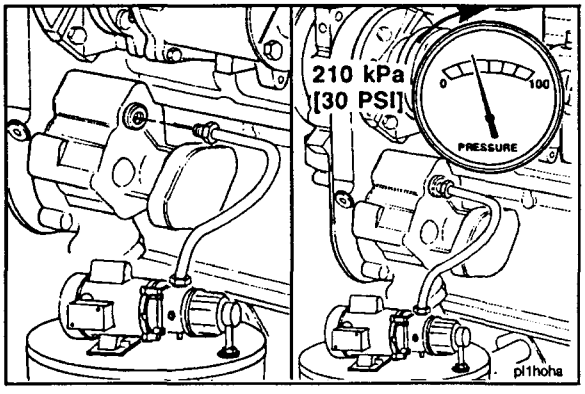

23. Fill the engine with lubricating oil. Refer to Procedure 2-10.

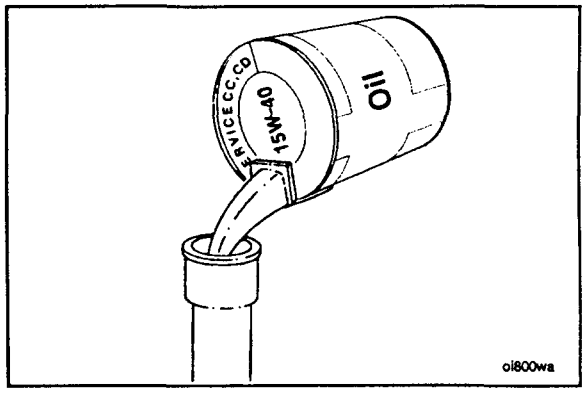

24. Fill the cooling system. Refer to Procedure 1-07.

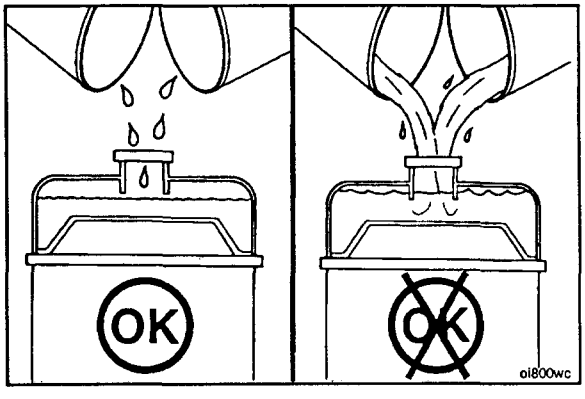

25. Operate the engine until it reaches a temperature of 80°C [180°F], and check for coolant or lubricating oil leaks.

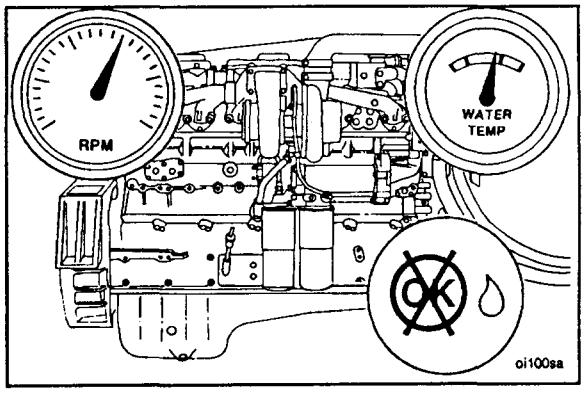

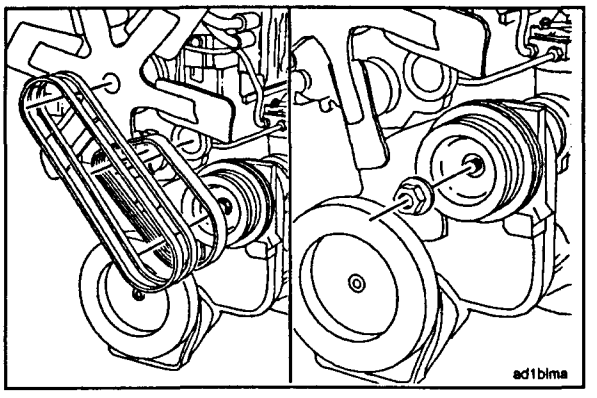

Accessory Drive Pulley - Replace (7-25)

Remove

1. Remove the fan drive and the water pump belts. Refer to Procedures 1-20 and 1-19, respectively.
2. Remove the freon compressor drive belt, if equipped. Refer to the manufacturer's instructions.
3. Remove the pulley retainer nut.

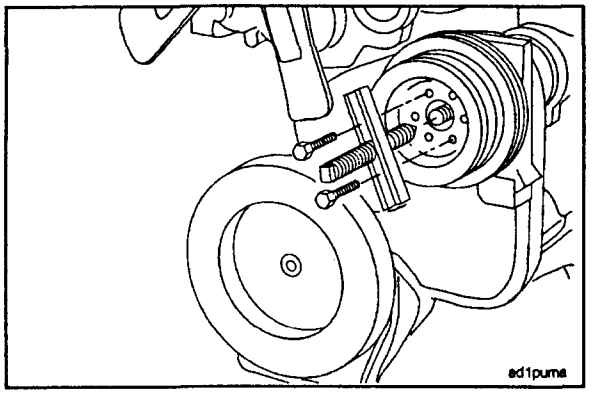

Caution: The gear cover will be damaged if the puller capscrews extend beyond the rear face of the accessory drive pulley.

4. Use Part No. ST-647 Standard Puller to remove the pulley.

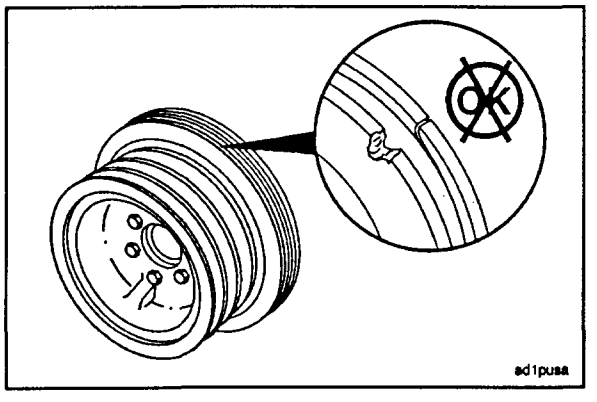

Inspect

1. Visually inspect the pulley for cracks, wear in the belt grooves, or other damage.

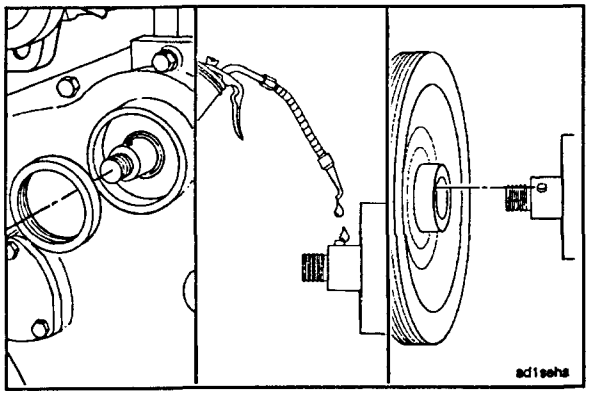

Install

1. Install a new accessory drive seal. Refer to Procedure 7-27.
2. Apply a film of Lubriplate 105 or its equivalent to the accessory drive shaft.
3. Align the keyway in the pulley with the dowel pin in the shaft.
4. Use your hand to partially push the pulley on the shaft.

5. Install Part No. 3376326 Pulley Installation Tool on the accessory drive shaft, and press the pulley on the shaft until it fits against the accessory drive gear.
6. Install the keyway seal in the pulley keyway with one end of the seal pointing toward the center line of the shaft.

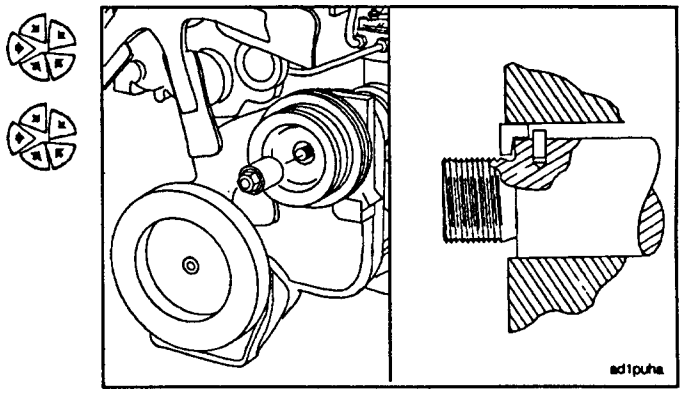

7. Install the washer and the flanged retaining nut on the accessory drive shaft. Tighten the nut to 420 N•m [310 ft-lbs] torque.
8. Install and adjust the water pump belt, the fan drive belts, and the freon compressor belt (if equipped). Refer to Procedures 1-19 and 1-20, respectively.

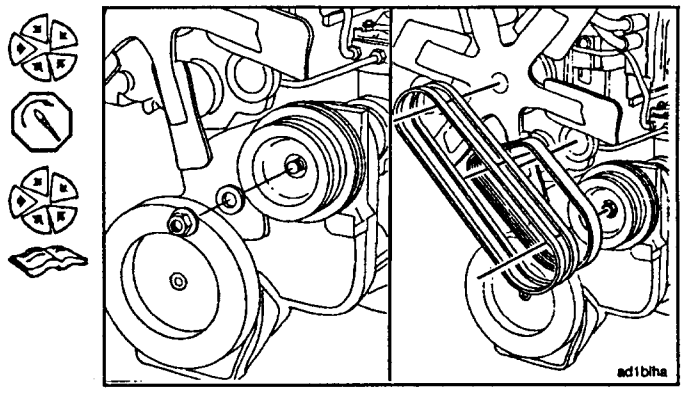

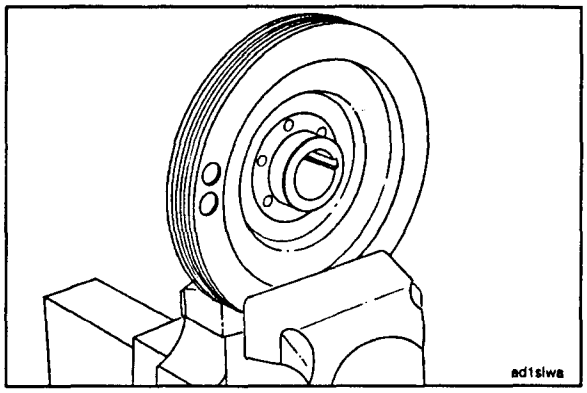

Wear Sleeve, Accessory Drive Pulley - Replace (7-26)

Remove

Caution: The jaws of the vise must have copper plates to prevent damage to the pulley.

1. Put the accessory drive pulley in a vise.

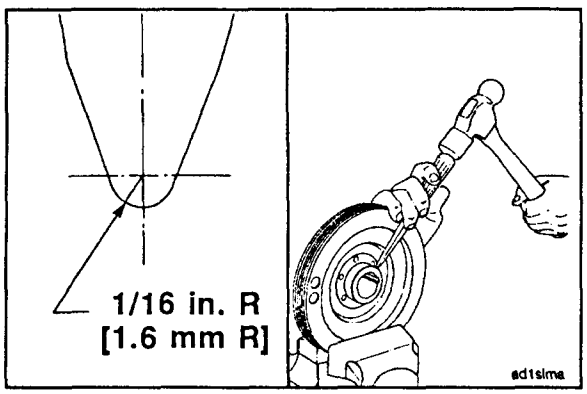

2. Grind a 1.57 mm [0.062-inch] radius on the cutting edge of a 19.05 mm [0.75-inch] chisel.
3. Put the chisel against the wear sleeve. Use moderate blows with a hammer to strike the chisel at four points on the outside diameter of the wear sleeve to relieve the press fit.

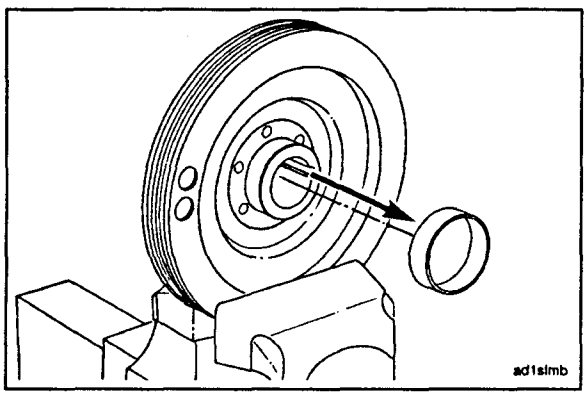

4. After the press fit has been relieved, remove the wear sleeve by hand.

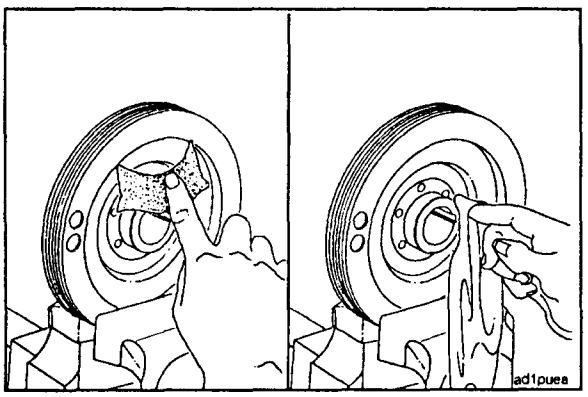

Clean and Inspect

1. Use a crocus cloth to remove any deposits from the seal area of the pulley.
2. Clean the seal area with a clean cloth.

3. Inspect the seal wear area for damage.

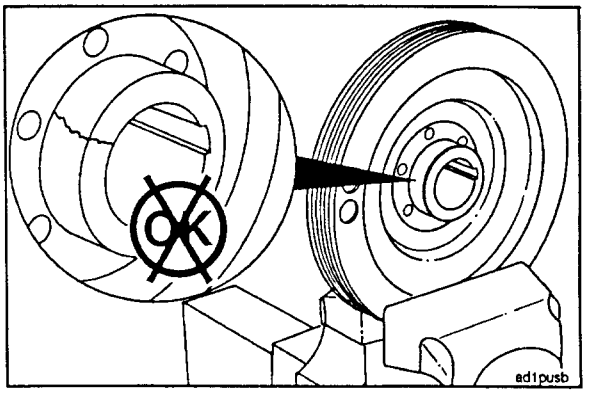

Install

1. Support the accessory drive pulley in an arbor press.
2. Install the wear sleeve on the pulley seal wear surface with the chamfer on the outside diameter of the wear sleeve facing up (away from the pulley).

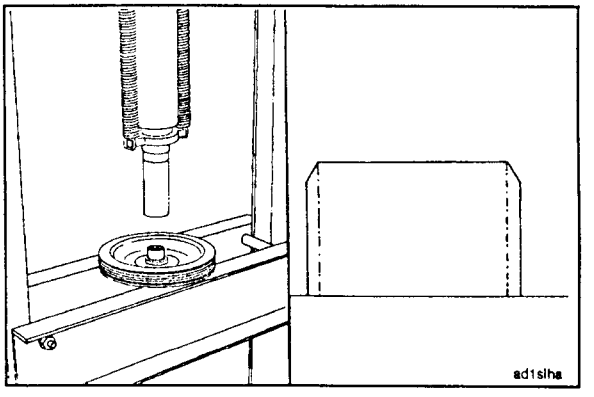

3. Place a flat steel plate on top of the wear sleeve. Press the sleeve on the pulley until the steel plate contacts the pulley.
4. Inspect the wear sleeve for damage or burrs.

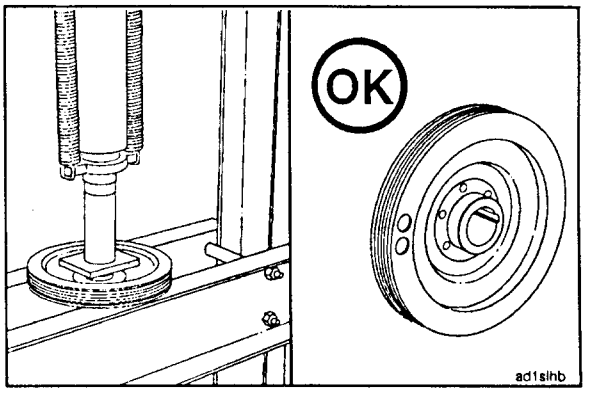

Seal, Accessory Drive - Replace (7-27)

Remove

1. Remove the fan drive and the water pump belts. Refer to Procedures 1-20 and 1-19, respectively.
2. Remove the freon compressor drive belt, if equipped. Refer to the manufacturer's instructions.
3. Remove the accessory drive pulley. Refer to Procedure 7-25.

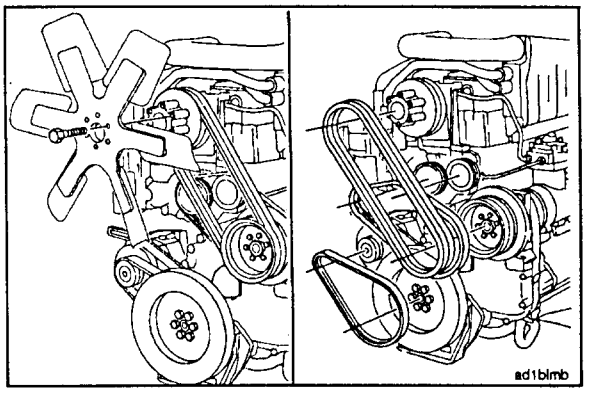

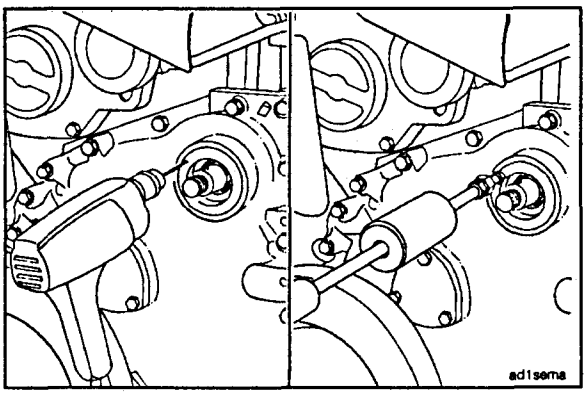

4. Drill two 1/8-inch holes 180 degrees apart in the seal casing.
5. Use a No. 10 sheet metal screw, and slide a hammer puller or a suitable pry bar to remove the seal.

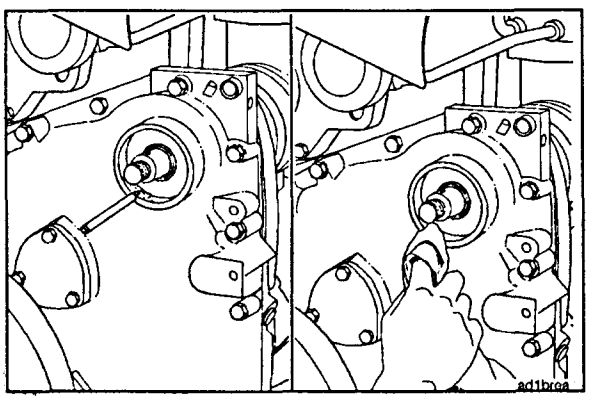

Clean and Inspect

Seal Bore

1. Use a small magnet and a clean cloth to remove any shavings from the seal bore and the accessory drive shaft.

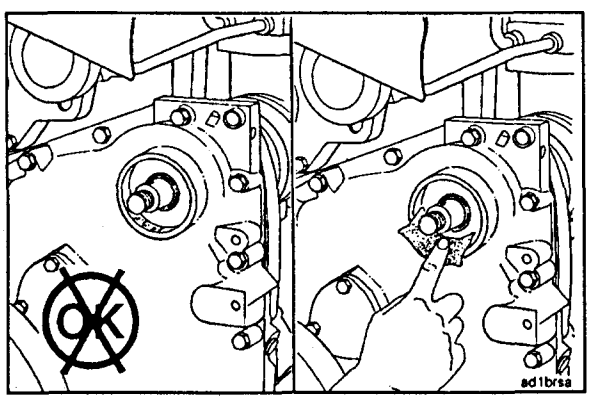

2. Inspect the seal bore for nicks, scratches, and sharp edges.
3. Use a 240 grit emery cloth dipped in clean lubricating oil to remove any minor defects.

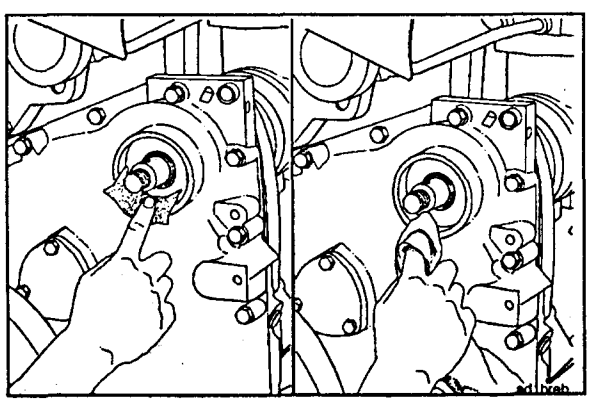

4. Use a crocus cloth to remove any deposits from the seal bore as a final polishing operation.
5. Clean the seal bore and the accessory drive shaft with a clean cloth.

Accessory Drive Pulley

1. If the oil seal wear surface on the accessory drive pulley wear sleeve is mutilated or has a groove worn deep enough that it can be felt with a fingernail, the wear sleeve **must** be replaced. Refer to Procedure 7-26.

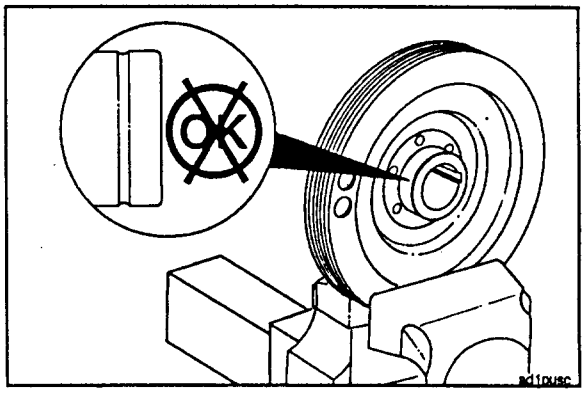

2. Inspect the oil seal wear area of the accessory drive pulley for minor nicks, scratches, or sharp edges.
3. Use a 240 grit emery cloth dipped in clean lubricating oil to remove any minor defects.

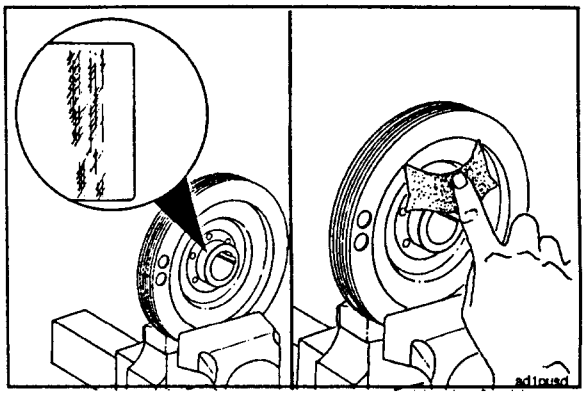

4. Use a crocus cloth for a final polishing operation and to remove any remaining deposits on the oil seal wear area.
5. Clean the oil seal wear area with a clean cloth.

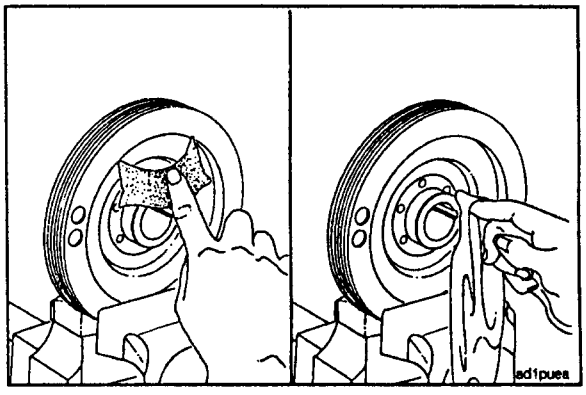

Install

1. Install the oil seal on Part No. ST-1173 Fuel Pump Drive Oil Seal Mandrel with the closed or part number side facing the driver.

NOTE: Do **not** use any kind of lubricant to install the seal. The oil seal **must** be installed with the lip of the seal and the seal wear area of the accessory drive pulley clean and dry. Use of lubricant will result in oil leakage at the seal.

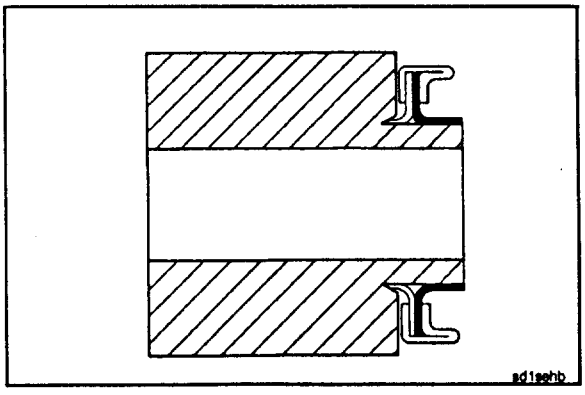

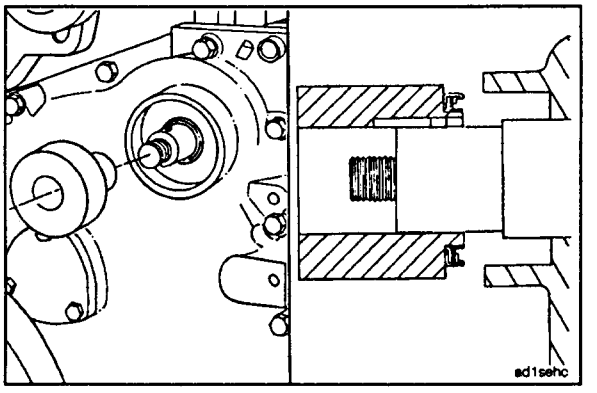

2. Put Part No. ST-1173 Fuel Pump Drive Oil Seal Mandrel over the accessory drive shaft.
3. Align the keyway in the driver with the groove pin in the accessory drive shaft.

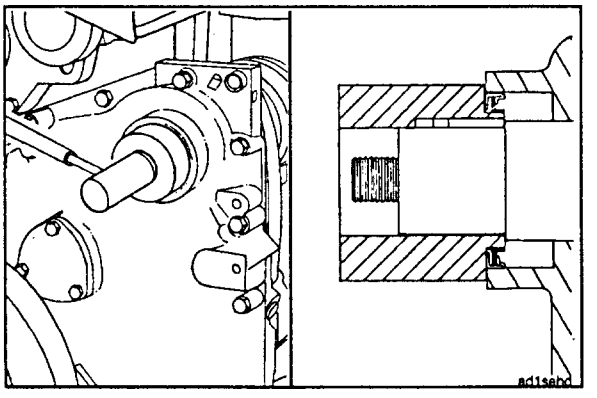

4. Push the seal into the seal bore until the seal casing fits against the ledge.

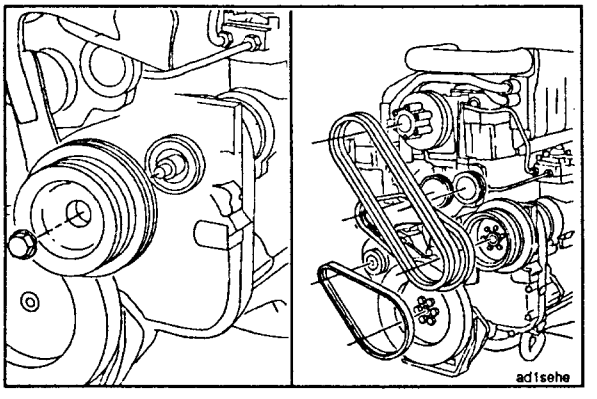

5. Install the accessory drive pulley. Refer to Procedure 7-25.
6. Install the water pump belt, the fan drive belts, and the freon compressor belt (if equipped). Refer to Procedures 1-19 and 1-20, respectively.

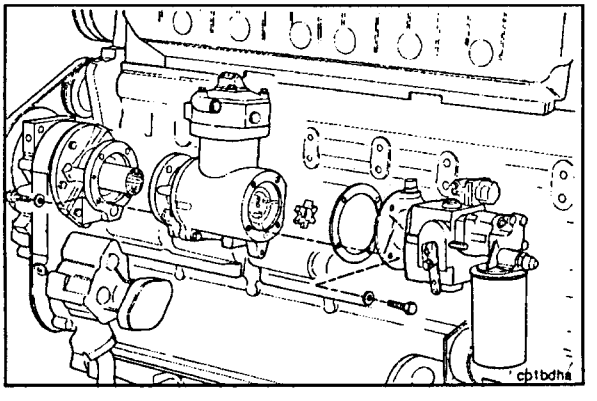

Accessory Drive - Replace (7-28)

Remove

1. Remove the fuel pump. Refer to Procedure 5-07.
2. Remove the air compressor. Refer to Procedure 4-12.

Caution: The timing marks on the accessory drive gear and the camshaft gear must be aligned so that the valve and the injector set marks on the accessory drive pulley show the correct adjustment position.

3. Rotate the crankshaft until the "A" mark on the accessory drive is aligned with the pointer on the gear cover.

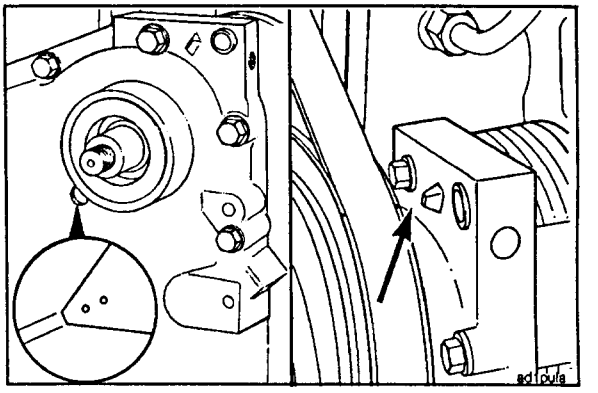

4. Remove the accessory drive pulley. Refer to Procedure 7-25.
5. Remove the inspection hole plug in the gear cover.

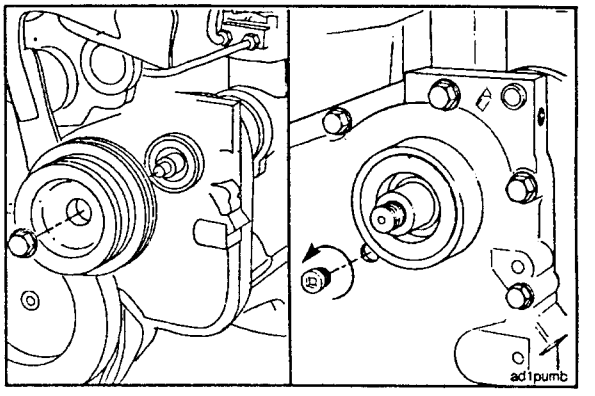

6. Check to make sure the timing marks on the camshaft gear and the accessory drive gear are aligned with each other.

NOTE: If only the timing mark on the accessory drive gear is visible through the inspection hole, rotate the crankshaft one complete revolution in the direction of rotation to align the timing marks on the camshaft gear and the accessory drive gear.

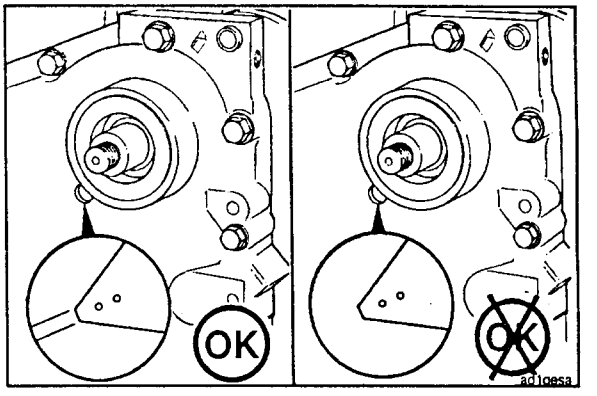

Caution: If the accessory drive dowel pin has been incorrectly installed, the dowel pin must be removed before attempting to remove the accessory drive to prevent damage to the accessory drive bushing.

7. Remove the five capscrews and the accessory drive assembly.
8. Clean the cylinder block and the accessory drive gasket surfaces.

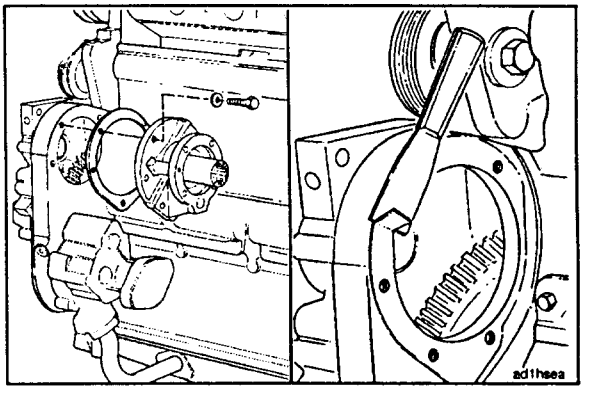

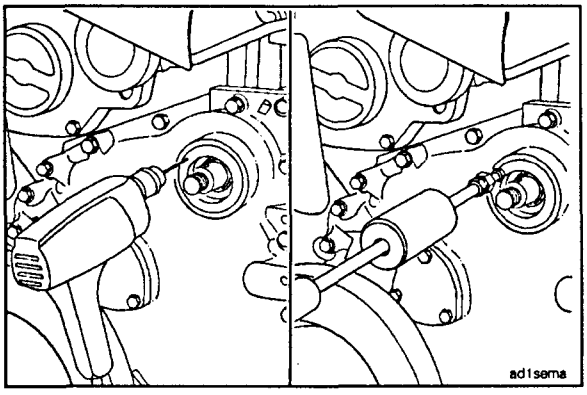

9. Remove the accessory drive oil seal. Refer to Procedure 7-27.

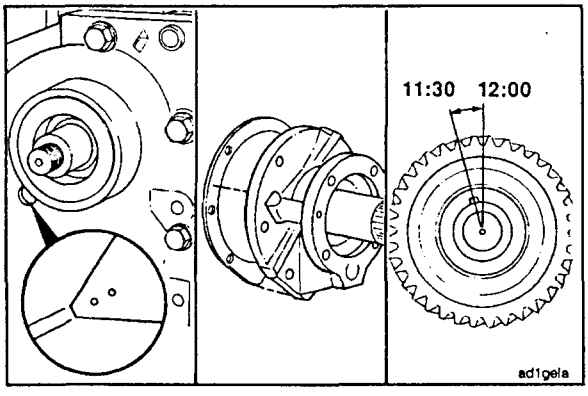

Install

Caution: If the crankshaft was rotated after the accessory drive was removed, rotate the crankshaft until the timing mark on the camshaft gear is visible in the inspection hole before installing the accessory drive assembly.

1. Install a new gasket on the accessory drive assembly.
2. Put the accessory drive shaft dowel pin at approximately the 11:30 o'clock position when facing the shaft from the pulley end.

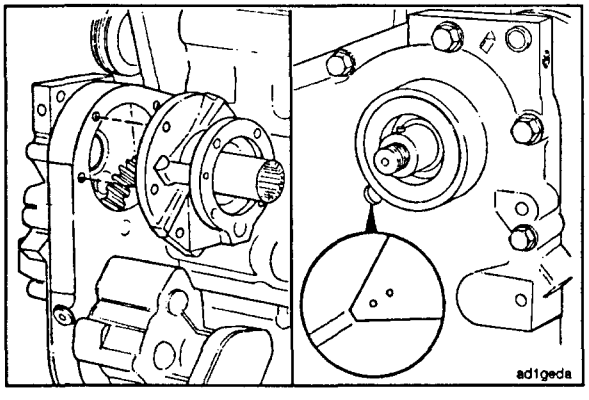

3. Install the accessory drive assembly in the gear housing accessory drive mounting hole.
4. Check the alignment of the camshaft gear and the accessory drive gear timing marks through the inspection hole in the gear cover.

NOTE: The accessory drive shaft dowel pin will be at the 12:00 o'clock position after the accessory drive is installed.

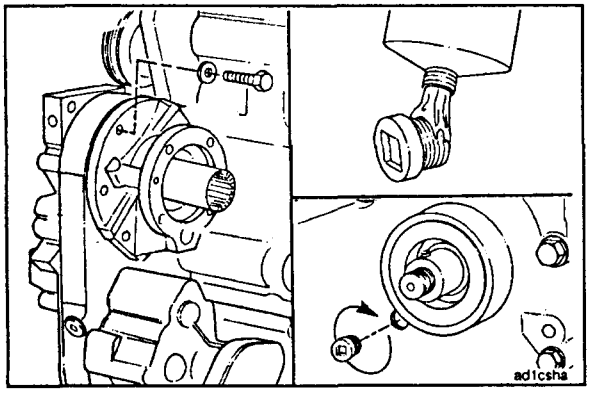

5. Install and tighten the five accessory drive mounting capscrews to 60 N•m [45 ft-lbs] torque.
6. Apply pipe sealant to the 3/8-inch inspection hole pipe plug.
7. Install and tighten the plug to 30 N•m [20 ft-lbs] torque.

8. Install a new accessory drive seal in the gear cover. Refer to Procedure 7-27.
9. Install the dowel pin in the accessory drive shaft (if removed).
10. Install the accessory drive pulley. Refer to Procedure 7-25.

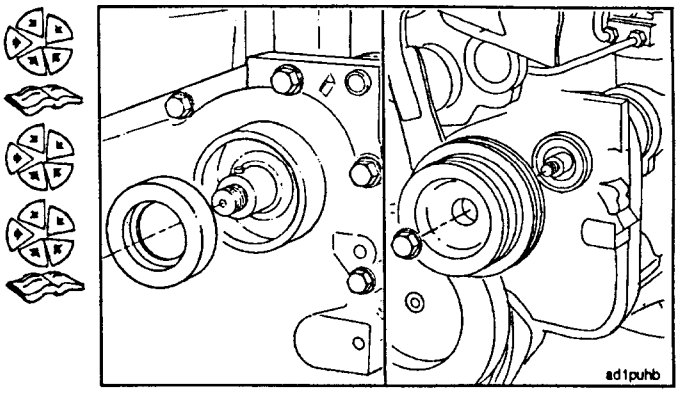

11. Install the air compressor. Refer to Procedure 4-12.
12. Install the fuel pump. Refer to Procedure 5-07.

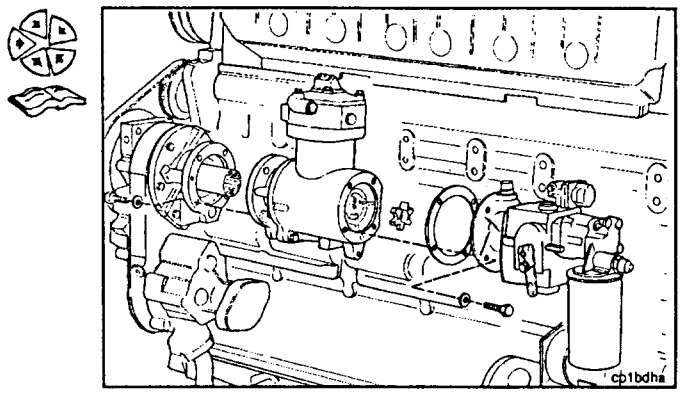

13. Operate the engine until it reaches a temperature of 80°C [180°F], and check for coolant or lubricating oil leaks.

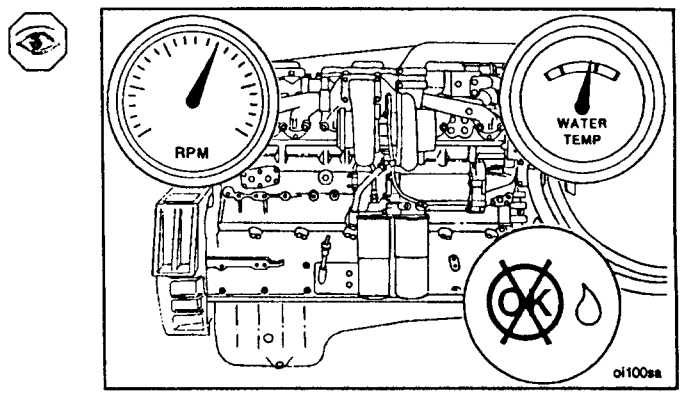

Vibration Damper - Check (7-29)

Rubber Element Vibration Damper

1. Use a mild detergent to clean the vibration damper.

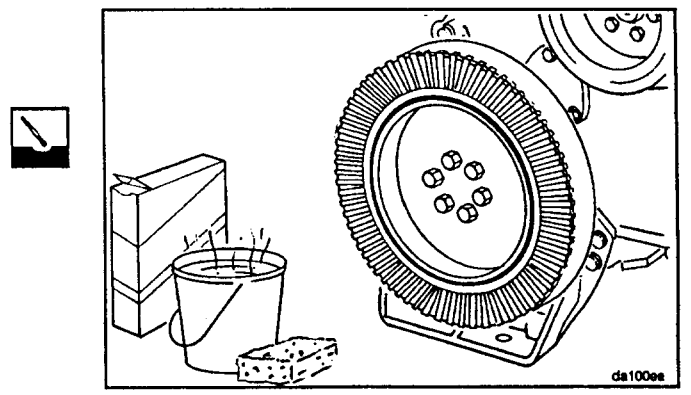

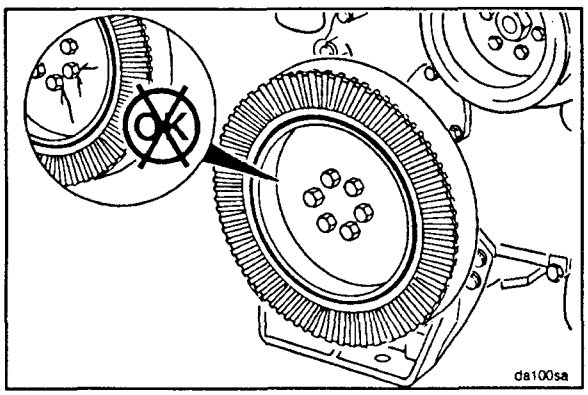

2. Inspect the vibration damper hub for cracks. Replace the damper if the hub is cracked. Refer to Procedure 7-30 for vibration damper removal.

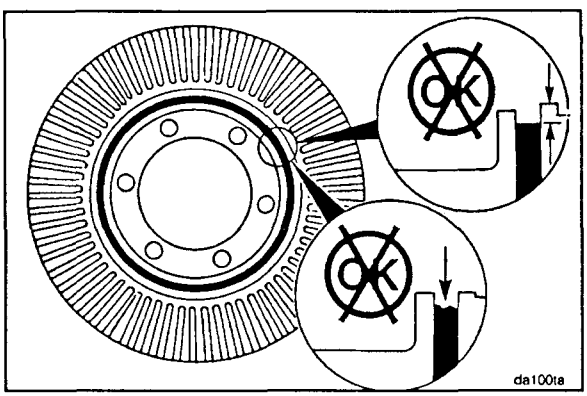

3. Inspect the elastic member for deterioration. Replace the damper if chunks of rubber are missing or if the elastic member is more than 3 mm [1/8-inch] below the metal surface.

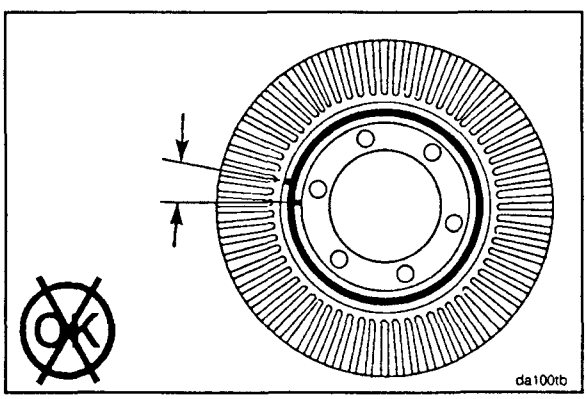

4. Check the index lines on the vibration damper. Replace the damper if these lines are 1 1/2 mm [1/16-inch] out of alignment.

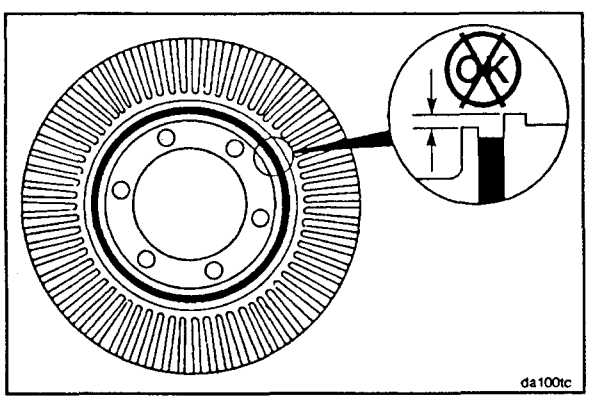

5. Check the flat surface of the inertia member for alignment with the hub. Replace the damper if the inertia member and the hub are more than 1.3 mm [0.050-inch] out of alignment.

6. Measure the vibration damper eccentricity by installing the dial indicator on the gear cover as indicated.

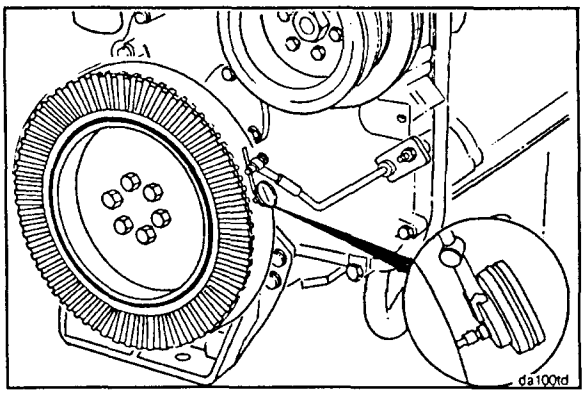

7. Rotate the crankshaft, and record the indicator movement. Replace the vibration damper if the eccentricity exceeds 0.10 mm [0.004-inch] per 25.4 mm [1.0 inch] of damper diameter. Refer to Procedure 7-30 for vibration damper removal.

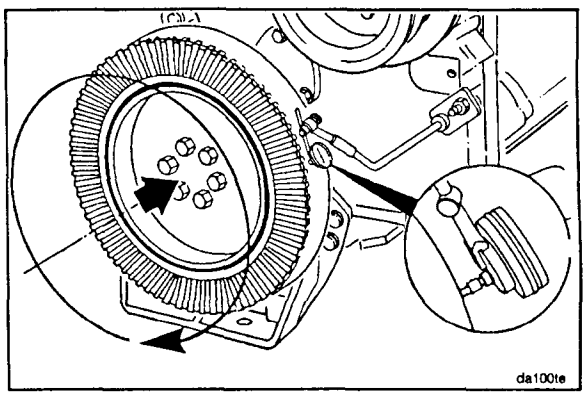

8. Install the dial indicator, as indicated, to measure wobble.
9. Push the crankshaft to the front or to the rear and "0" (zero) the indicator.

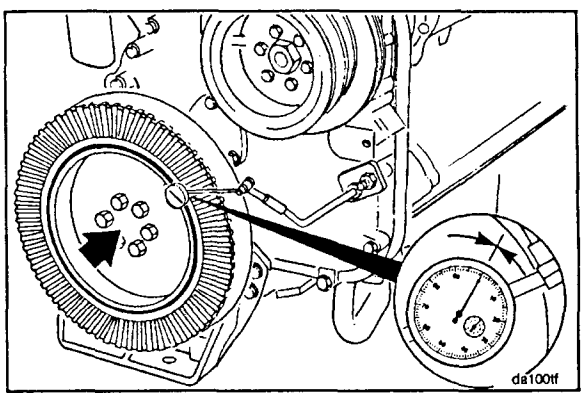

10. Rotate the crankshaft 360 degrees, maintaining the position of the crankshaft (either toward the front or the rear) in relation to the block.

    Record the total indicator motion.

    Replace the damper if wobble exceeds 0.18 mm [0.007-inch] per 25.4 mm [1.0 inch] of radius. Refer to Procedure 7-30 for vibration damper removal.

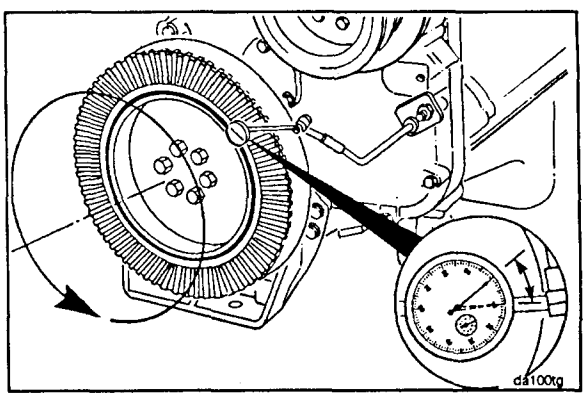

Viscous Vibration Damper

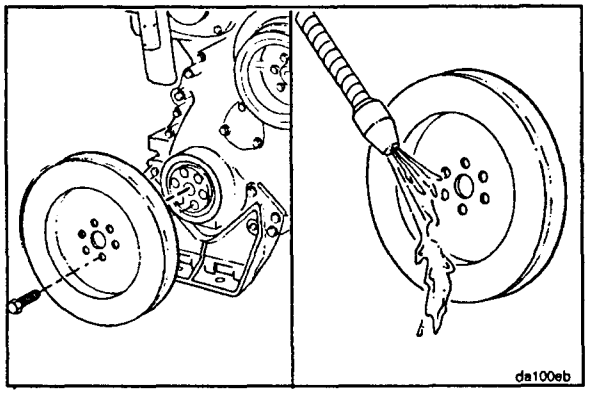

1. Remove the viscous vibration damper. See Procedure 7-30 for removal.
2. Clean the damper with a solvent cleaner.

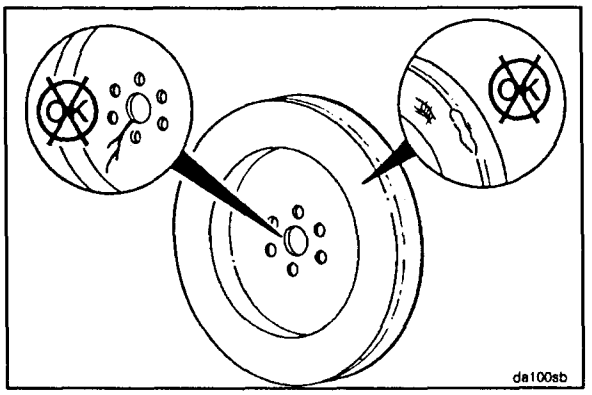

3. Check the mounting web for cracks. Check the housing for dents or raised surfaces. Remove and replace the damper if any of these defects are identified.

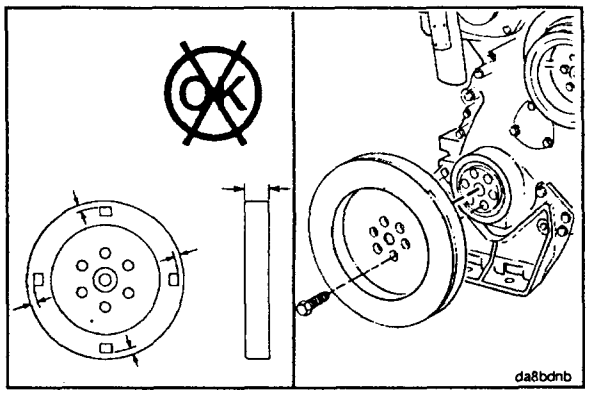

4. Remove the paint from the damper in four locations on either side of the damper. Measure and record the thickness of the damper in four places. Measure the thickness 3.175 mm [0.125-inch] from the outside of the damper. Replace the damper if its thickness varies by more than 0.25 mm [0.010-inch].

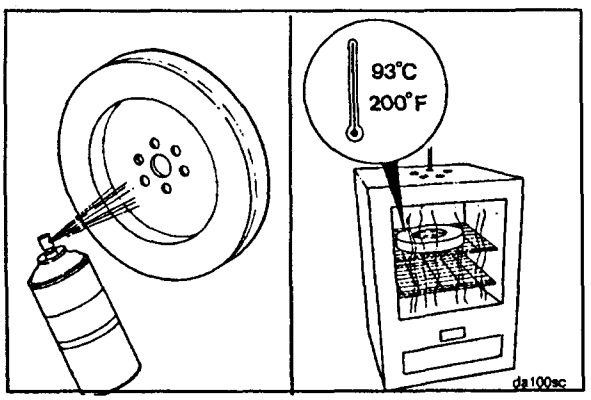

5. Spray the damper with spot check developer, Type SKD-NF or its equivalent. Heat the damper in an oven (rolled lip side down) at 93°C [200°F] for 2 hours.

Caution: Wear protective gloves when handling parts that have been heated to prevent personal injury.

6. Remove the damper from the oven, and check for fluid leakage. If there is leakage, replace the damper.

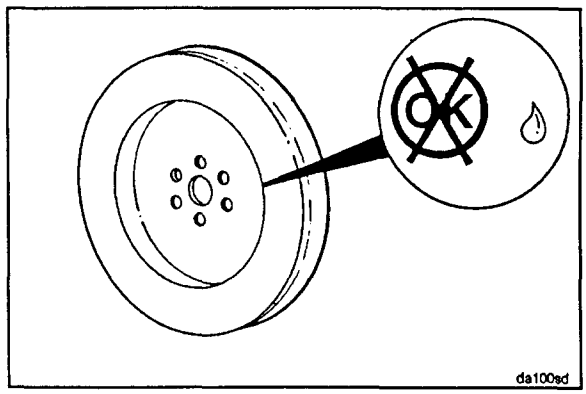

Install the Vibration Damper

1. Install two guide pins into the end of the crankshaft. Install the pulley and the vibration damper.

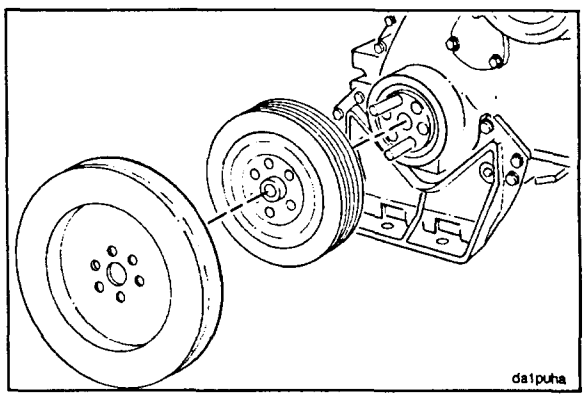

2. Lubricate the threads of the capscrews and the washer with a film of SAE 15W-40 oil.

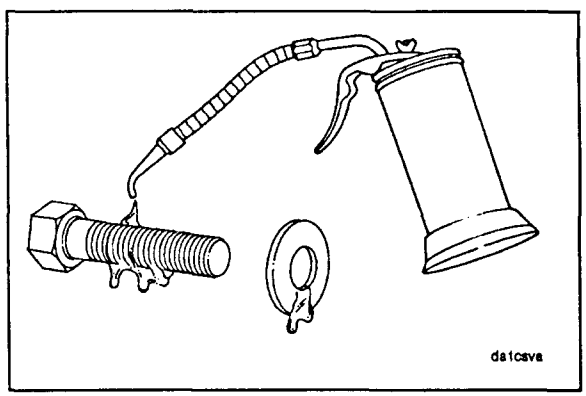

3. Install the washers and the capscrews. Keep the crankshaft from rotating, and tighten the capscrews to the following torque values:

Capscrew Size	SAE Grade No.	N•m [ft-lb]
5/8-inch	8	260 [190]

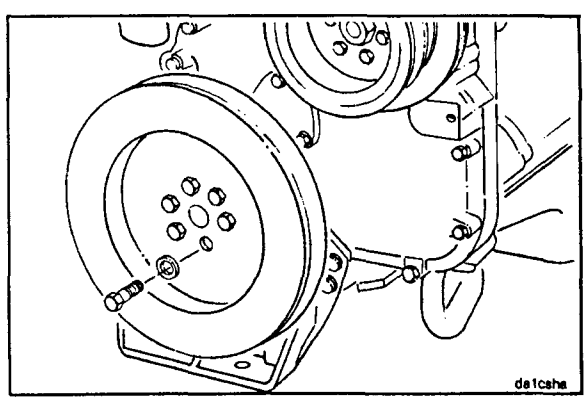

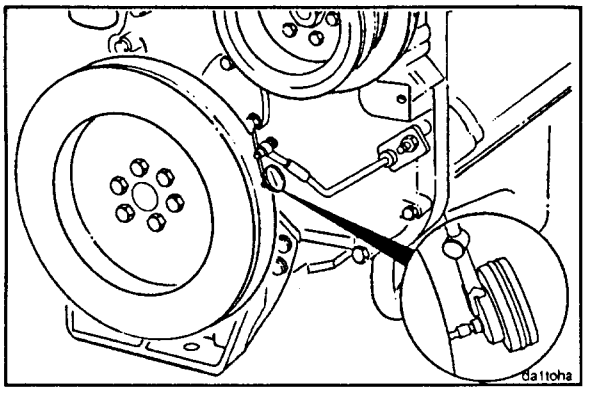

4. To measure damper eccentricity, install the dial indicator on the gear cover as indicated.

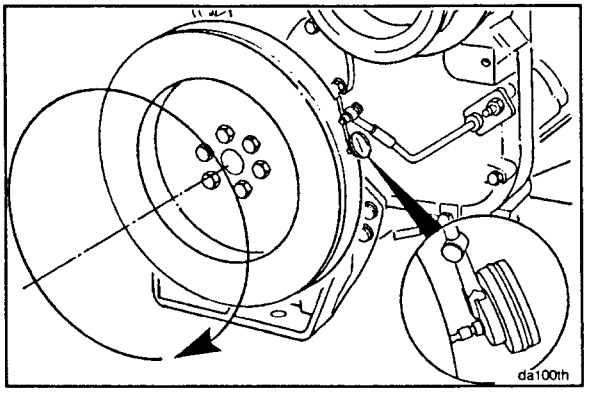

5. Rotate the crankshaft, and record the indicator movement. Replace the vibration damper if the eccentricity exceeds 0.10 mm [0.004-inch] per 25.4 mm [1.0 inch] of the damper diameter. Refer to Procedure 7-30 for vibration damper removal.

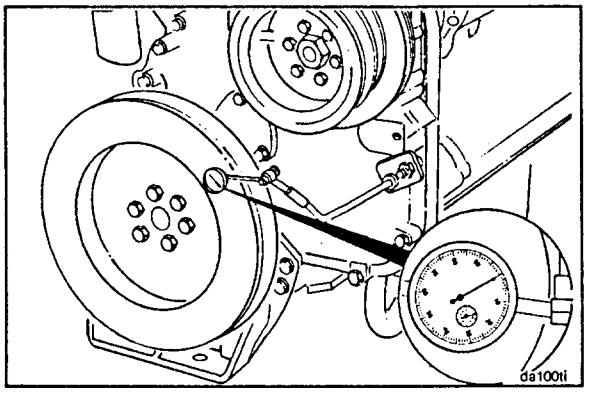

6. Install the dial indicator as indicated to measure wobble.

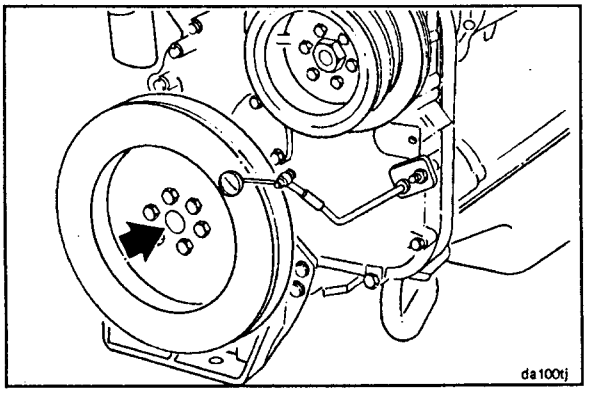

7. Push the crankshaft to the front or to the rear.

8. Rotate the crankshaft 360 degrees, maintaining the position of the crankshaft (either toward the front or the rear) in relation to the block.

   Record the total indicator motion.

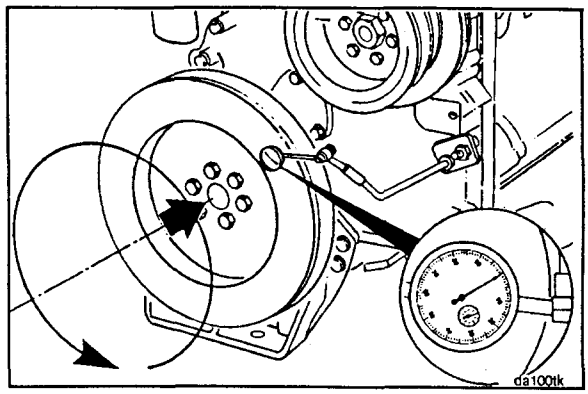

9. Replace the damper if wobble exceeds 0.18 mm [0.007-inch] per 25.4 mm [1.0 inch] of radius. Refer to Procedure 7-30 for vibration damper removal.

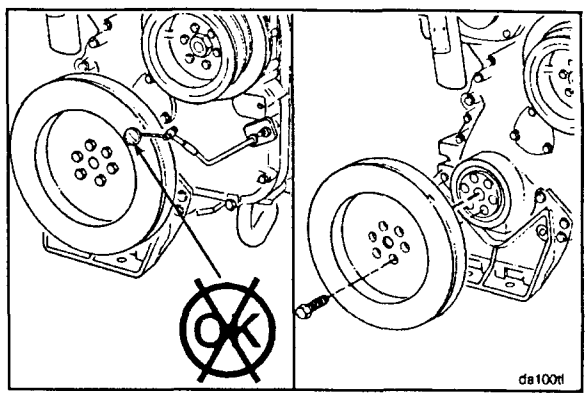

Crankshaft Pulley - Replace (7-30)

Remove

1. Remove the alternator drive belt. Refer to Procedure 6-09.

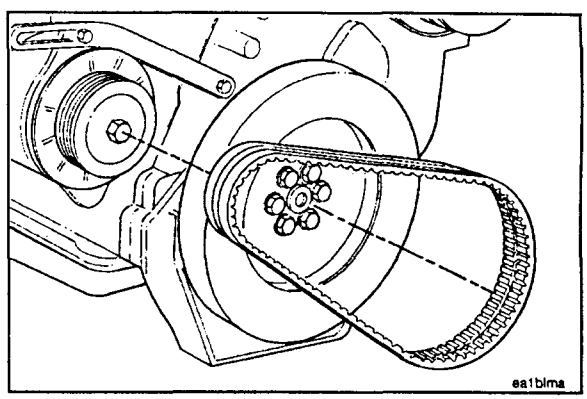

2. Remove one of the capscrews which holds the vibration damper and the pulley to the crankshaft, and install a guide stud in the hole.
3. Remove the remaining five capscrews, the damper, and the pulley.

NOTE: Do **not** use a hammer or a screwdriver to remove a viscous damper. These tools can damage the viscous damper.

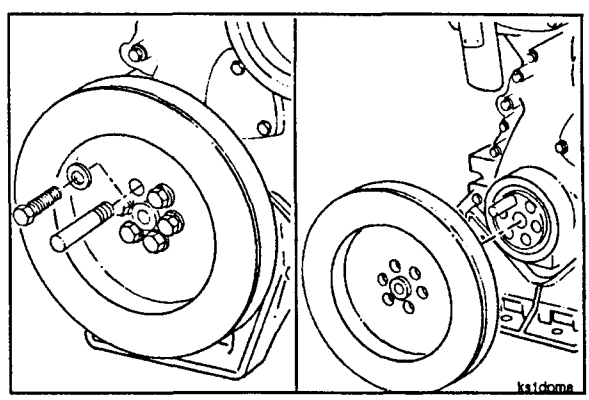

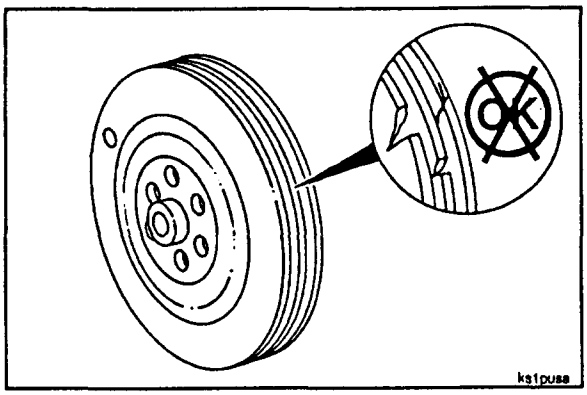

Inspect

1. Visually inspect the pulley for cracks, wear in the belt grooves, or other damage.

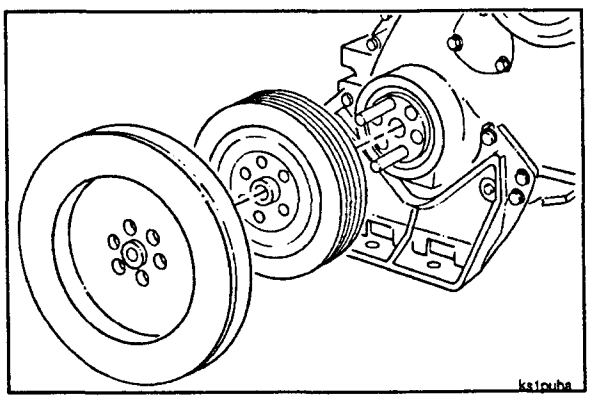

Install

1. Install two guide studs in the crankshaft nose.
2. Install the pulley and the vibration damper on the guide studs.

NOTE: Make sure the mounting surfaces of the crankshaft nose, the vibration damper, and the pulley are clean, dry, and free of burrs.

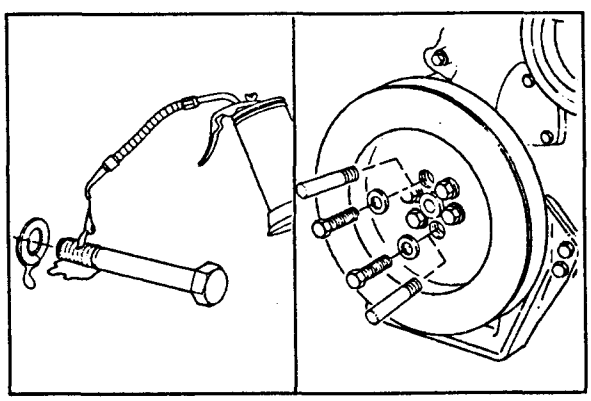

3. Lubricate the mounting capscrew threads and the face of the washers with SAE 30W oil.
4. Install four of the six mounting capscrews. Remove the two guide studs, and install the remaining two capscrews. Tighten the six capscrews to 260 N•m [190 ft-lbs] torque.
5. Check the vibration damper for eccentricity and wobble. Refer to Procedure 7-29.

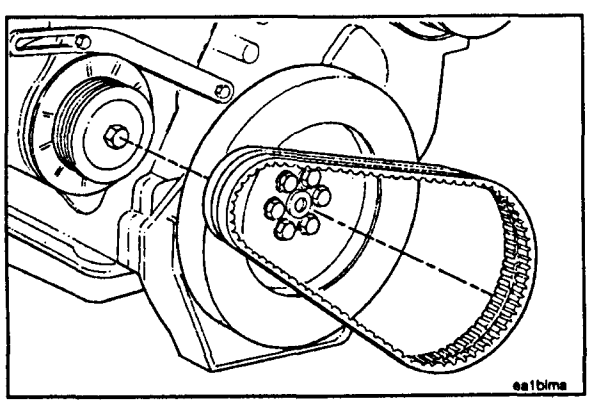

6. Install and adjust the alternator drive belt. Refer to Procedure 6-07.

Seal, Front Crankshaft - Replace (7-31)

Remove

1. Remove the alternator drive belt. Refer to Procedure 6-09.
2. Remove the crankshaft damper and the pulley. Refer to Procedure 7-30.

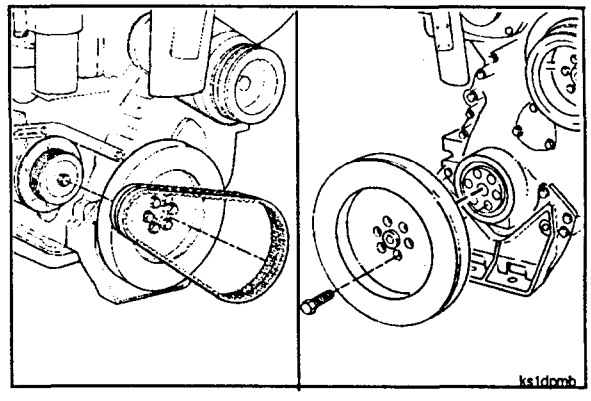

3. Use three of the damper mounting capscrews to secure Part No. ST-1259-1 Top Plate (from ST-1259 Oil Seal Puller/Installer) to the front of the crankshaft.
4. Install Part No. 3375496 Drill Pilot in one of the 1/4-inch holes in Part No. ST-1259-1 Top Plate.

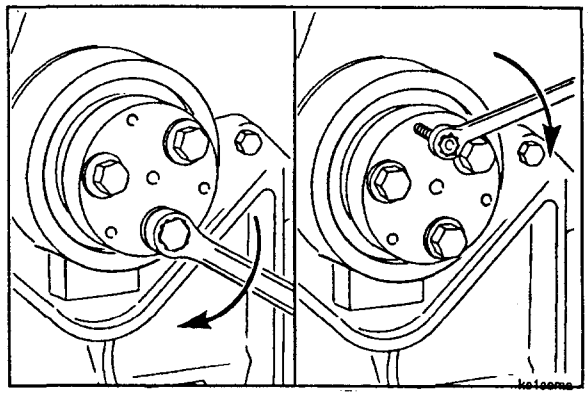

5. Insert a No. 31 [0.120-inch] drill bit in the drill pilot, and drill a hole through the seal casing.
6. Remove the drill pilot, and repeat the same procedure in the two remaining holes in Part No. ST-1259-1 Top Plate.

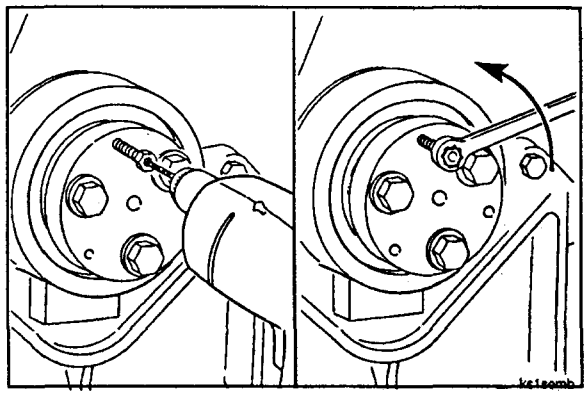

7. Install three of Part No. ST-1259-6 Seal Puller Screws in the plate. Tighten the screws until the shoulder on the screw contacts the seal casing.
8. Remove the three damper mounting capscrews from the puller plate.

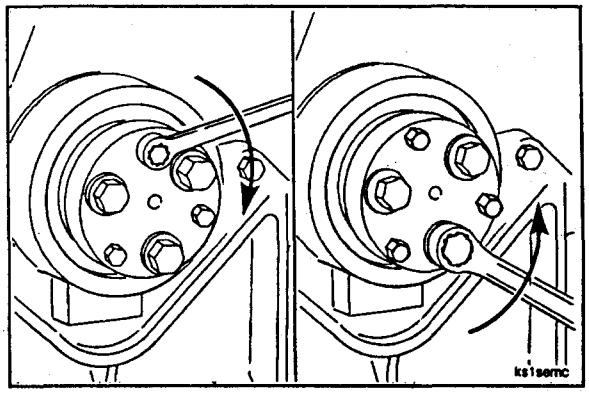

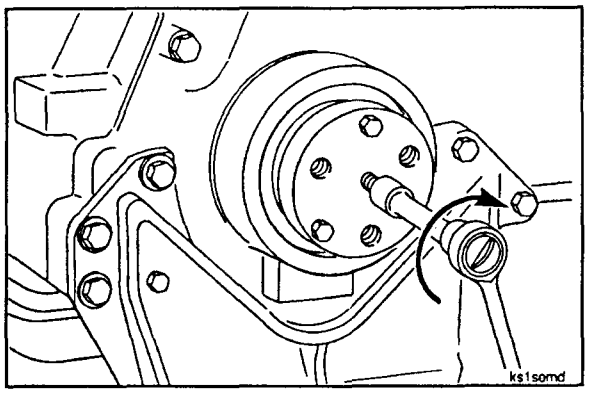

9. Install the center puller screw in the plate. Continue to turn the center screw **clockwise** until the seal is removed from the gear cover.

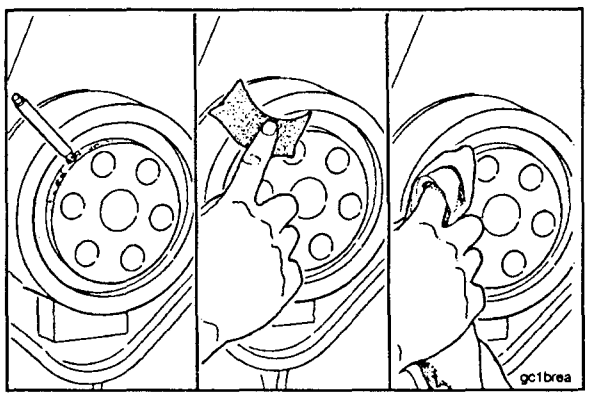

Clean and Inspect

1. Use a magnet to remove any shavings from the seal bore or the crankshaft.
2. Use a crocus cloth to remove any deposits from the crankshaft or the seal bore.
3. Use a clean cloth to clean the crankshaft flange and the seal bore.

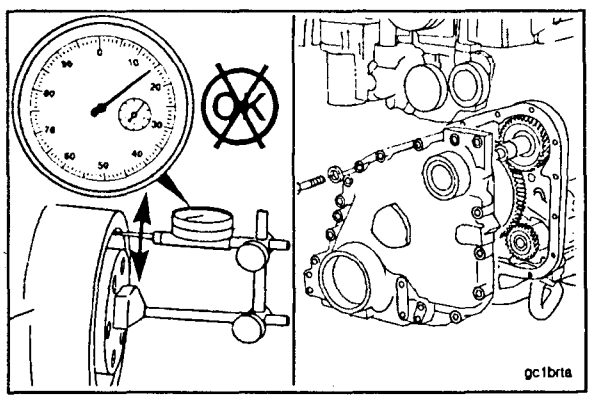

4. Mount a dial indicator on the front of the crankshaft. Check the concentricity of the seal bore. The total indicator reading **must not** exceed 0.25 mm [0.010-inch].
5. If the reading exceeds 0.25 mm [0.010-inch], remove the gear cover; and check for burrs between the mounting surfaces, the damaged dowel pins, or the dowel holes. Refer to Procedure 7-34.

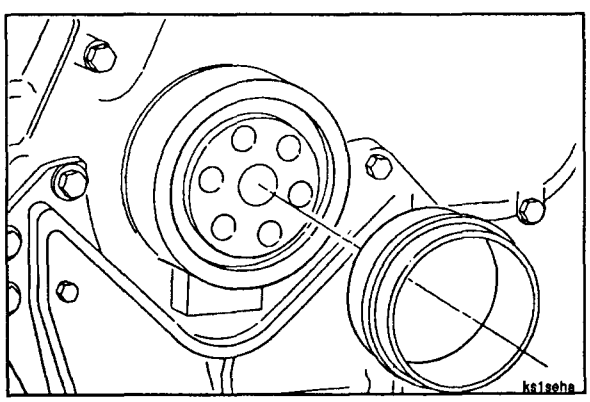

Install

NOTE: "LDL TFE" (Lay-down Lip, Teflon) oil seals for service replacement have an assembly tool which protects the seal lip during shipment and installation. The "LDL TFE" oil seal **must** be installed with the lip of the seal and the crankshaft clean and dry. Do not use any kind of lubricant. The use of lubricant will result in oil leakage at the seal.

1. Use hand pressure to push the oil seal from the assembly tool onto the crankshaft as far as possible. Remove the assembly tool.

2. Install Part No. ST-1259-1 Top Plate (from Part No. ST-1259 Oil Seal Puller/Installer) on the crankshaft, and use three vibration damper mounting capscrews and flat washers.
3. Tighten the three capscrews alternately in 1/2-turn increments until Part No. ST-1259-1 Top Plate seats against the crankshaft nose.

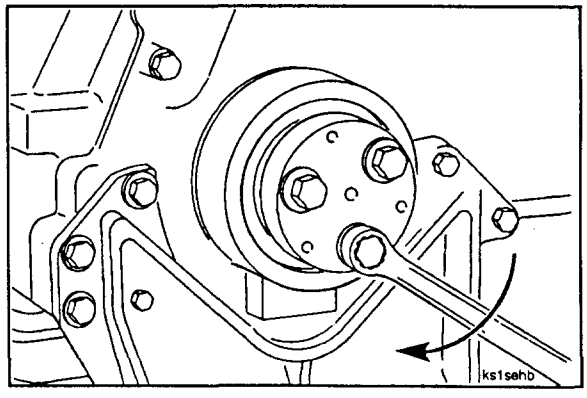

4. Install the crankshaft pulley and the vibration damper. Refer to Procedure 7-30.
5. Install and adjust the alternator drive belt. Refer to Procedure 6-07.

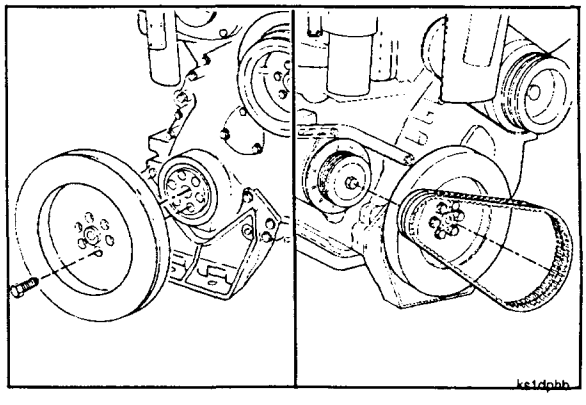

Camshaft Bearing Support - Replace (7-32)

Remove

1. Remove the three capscrews from the support.
2. Use a rubber or plastic hammer to rotate the bearing support approximately 60 degrees.

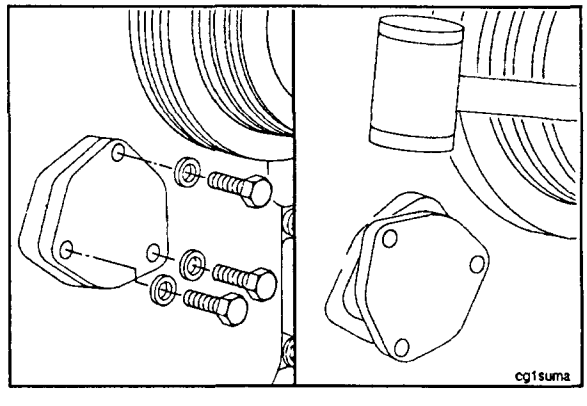

3. Use a suitable pry bar to remove the bearing support from the gear cover.

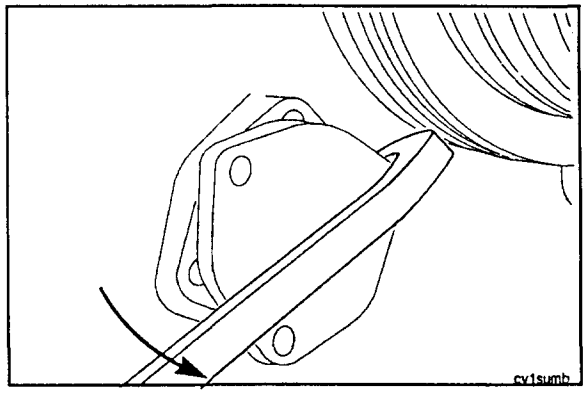

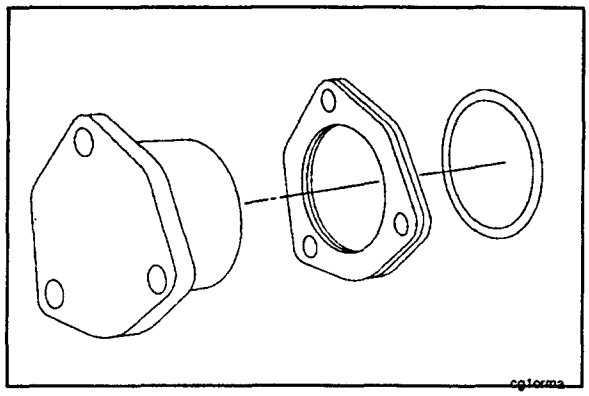

4. Remove the O-ring and the shims from the bearing support. Do **not** dispose of the shims.

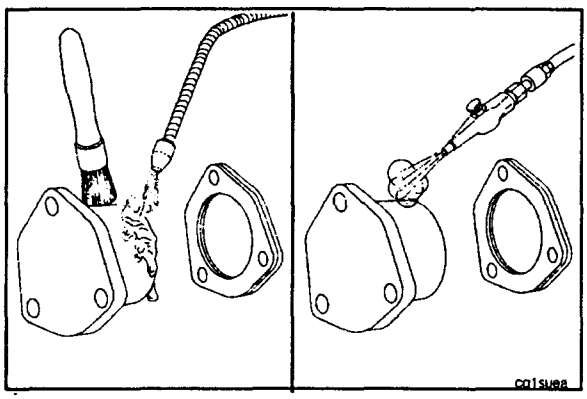

Clean and Inspect

1. Clean the bearing support and the shims with solvent. Dry with compressed air.

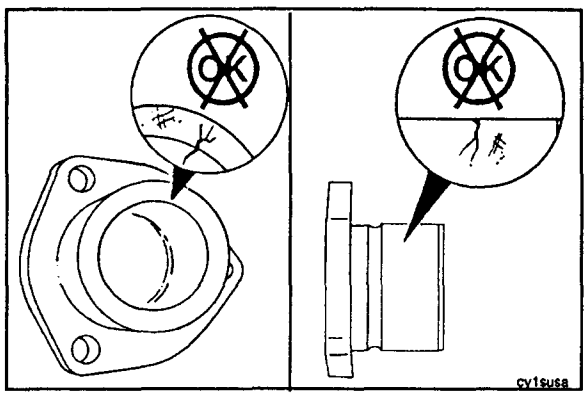

2. Inspect the bearing support for cracks or damage on the thrust surface.

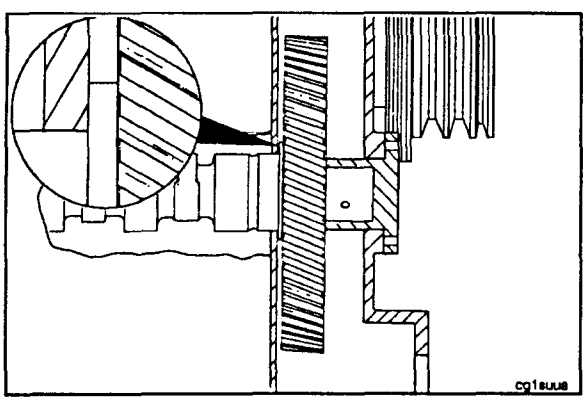

Install

1. Install the support bearing in the bore of the gear cover. Do **not** install the O-ring on the support at this time.
2. Push the support against the camshaft so the camshaft gear rests against the camshaft thrust washer.

3. Hold the support against the camshaft, and use a feeler gauge to measure the space between the gear cover flange and the support bearing.

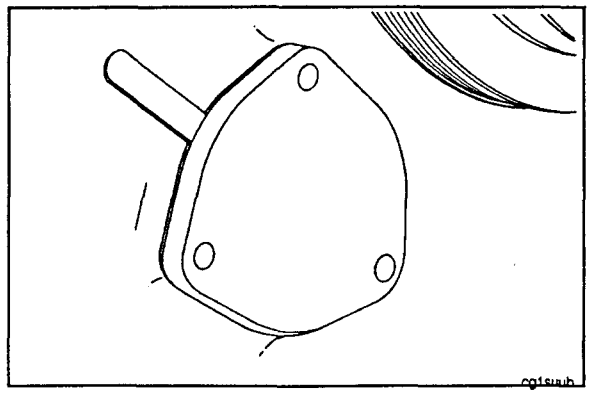

4. The clearance between the bearing support and the camshaft gear must be 0.20 mm to 0.33 mm [0.008- to 0.013-inch]. After measuring the space between the bearing support and the gear cover flange, add an additional 0.20 mm to 0.33 mm [0.008- to 0.013-inch] to that number to determine the thickness of the shims required. Example: Space of 1.52 mm [0.060-inch], measured with a feeler gauge, plus 0.25 mm [0.010-inch] for clearance would require 1.77 mm [0.070-inch] shims.

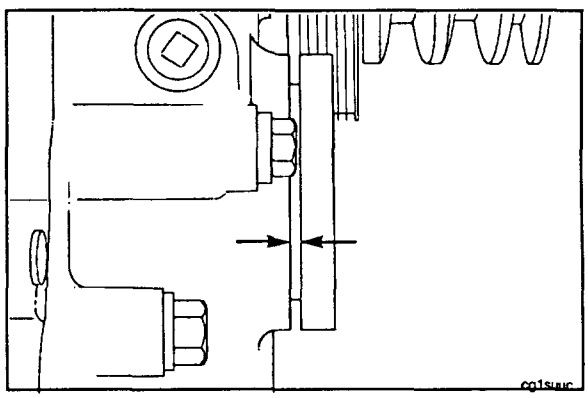

5. Use a micrometer to measure the shims removed from the support at the time of disassembly. Add or remove shims as required to obtain the correct clearance between the bearing support and the camshaft gear. Shims are available in the following thicknesses:

Shim Thicknesses	
mm	in
0.05	0.002
0.13	0.005
0.25	0.010
0.63	0.025

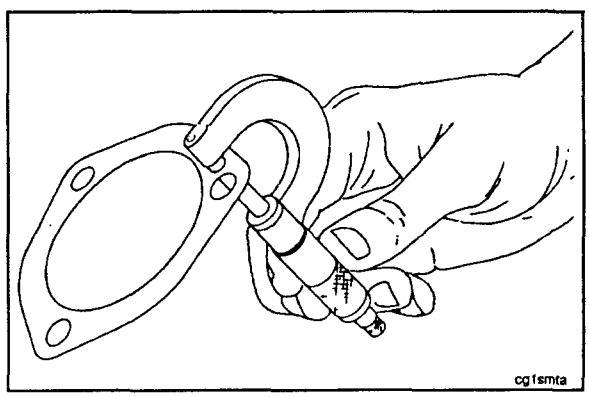

6. Install the required number of shims and a new O-ring on the support bearing.

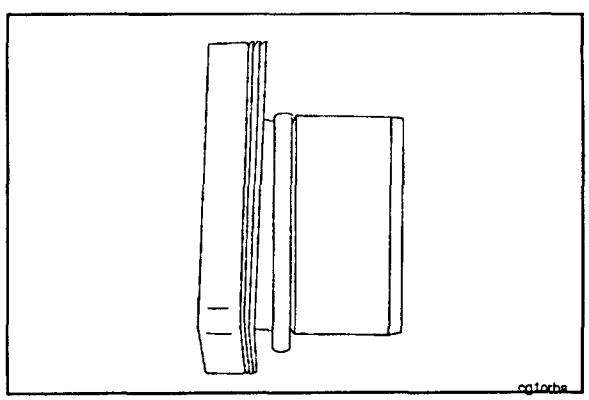

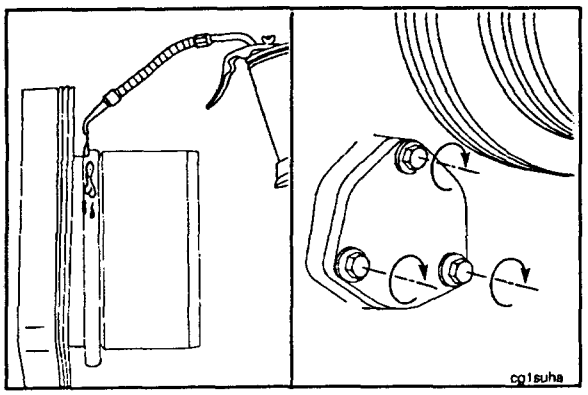

Caution: Do not use lubricating oil on the O-ring. The O-ring will increase in size when in contact with lubricating oil. Use vegetable oil to lubricate the O-ring.

7. Lubricate the O-ring, and install the support bearing into the gear cover. Tighten the capscrews to 25 N•m [20 ft-lbs] torque.

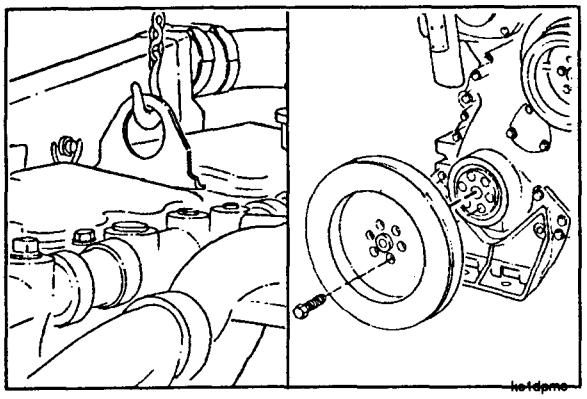

Front Engine Support Bracket - Replace (7-33)

Remove

1. Use a hoist or lifting fixture to support the front of the engine.
2. Remove the vibration damper. Refer to Procedure 7-30.

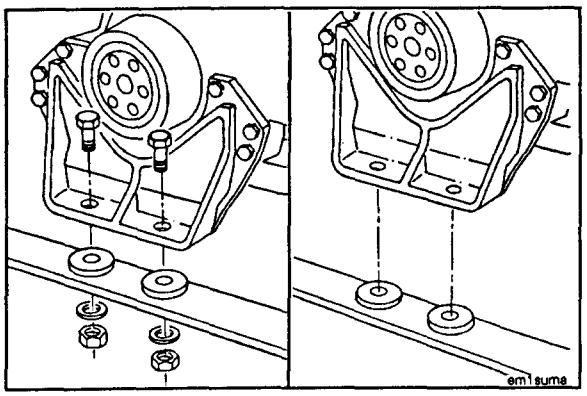

3. Remove the two capscrews from the front engine mounts and the support bracket.
4. Raise the front of the engine with the hoist.

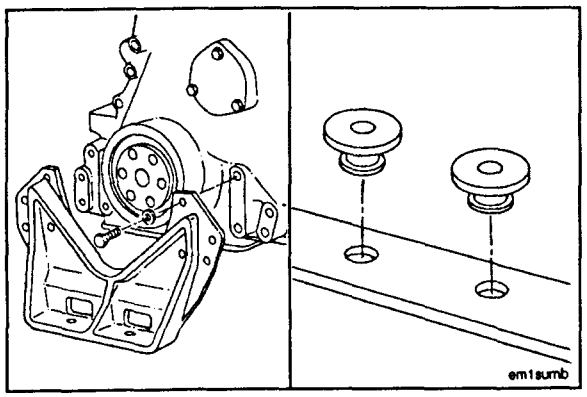

5. Remove the eight mounting capscrews and the front engine support bracket from the gear cover.
6. Remove the rubber engine mounts from the crossmember.

Clean and Inspect

1. Steam clean or use solvent, and dry the parts with compressed air.
2. Visually inspect the engine mounts for cracks or deterioration.

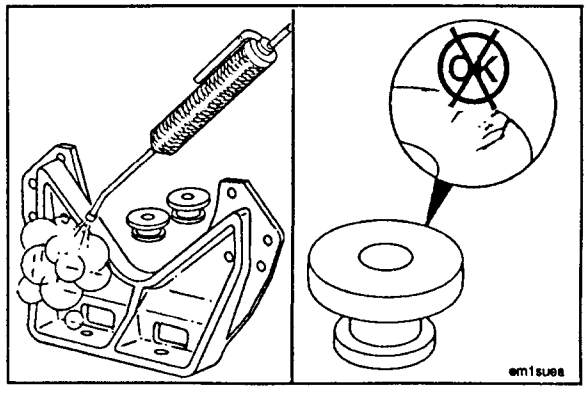

3. Visually inspect the engine support bracket for cracks or damage.
4. Inspect the capscrew threads for damage.

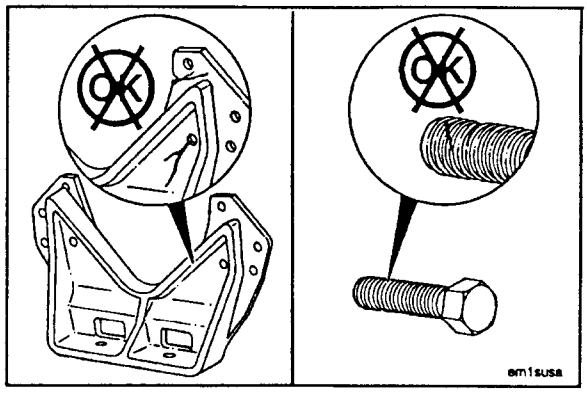

Install

1. Install the rubber engine mounts in the crossmember.
2. Install the engine support bracket and the eight mounting capscrews.
3. Tighten the capscrews to 70 N•m [50 ft-lbs] torque.

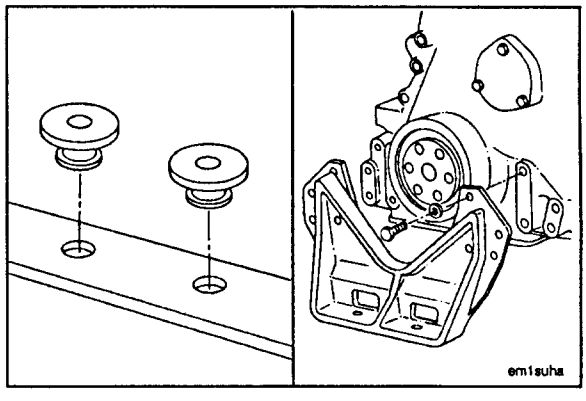

4. Lower the front of the engine to rubber engine mounts.

NOTE: The capscrew holes in the support bracket must be aligned with the capscrew holes in the engine mounts.

5. Install the two support bracket to engine mount capscrews, and tighten to the manufacturer's specifications.
6. Remove the lifting fixture or the hoist from the engine.

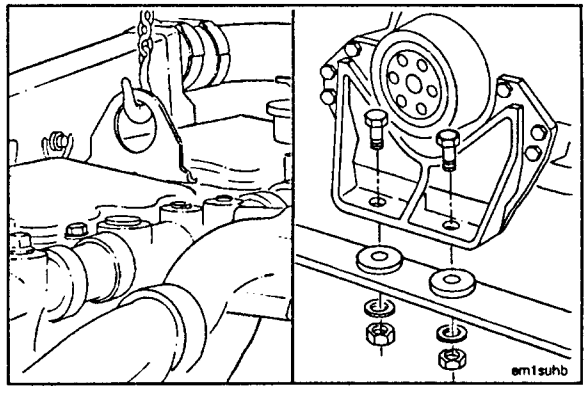

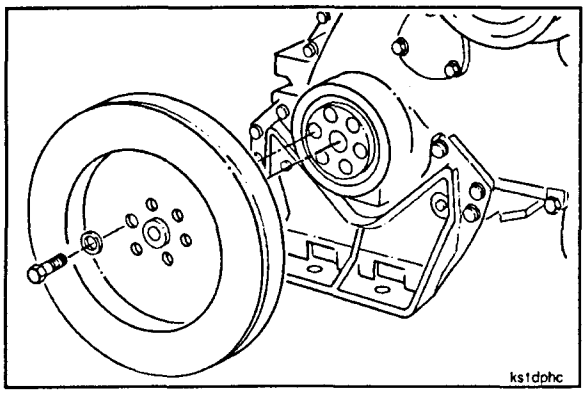

7. Install the vibration damper. Refer to Procedure 7-30.

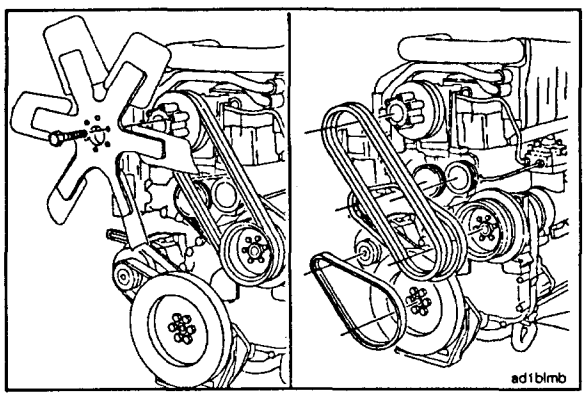

Gear Cover - Replace (7-34)

Remove

1. Remove the fan. Refer to Procedure 1-18.
2. Remove the fan drive belts and the water pump belt. Refer to Procedures 1-20 and 1-19, respectively.
3. Remove the alternator drive belt. Refer to Procedure 6-09.

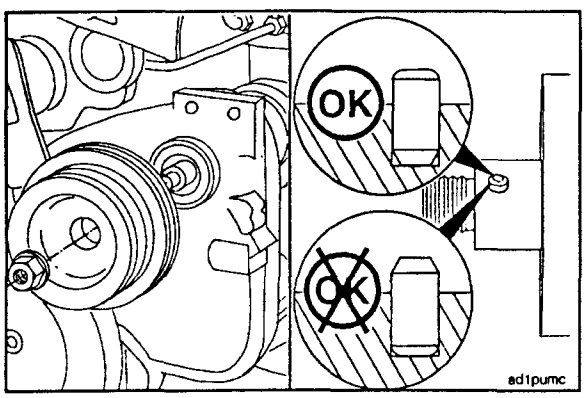

4. Remove the accessory drive pulley. Refer to Procedure 7-25.

Caution: If the accessory drive dowel pin has been incorrectly installed, the dowel pin must be removed before attempting to remove the gear cover to prevent damage to the accessory drive bushing.

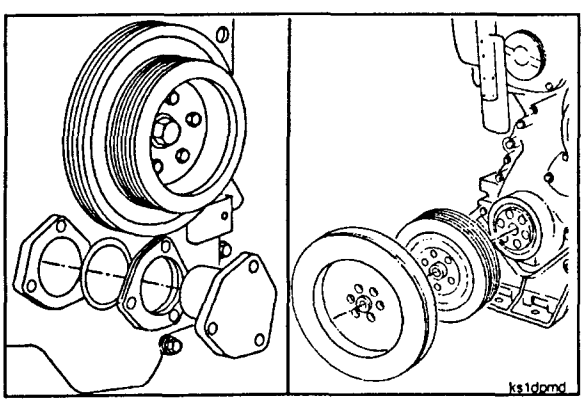

5. Remove the camshaft support and the thrust bearing. Do not discard the shims. Refer to Procedure 7-32.
6. Remove the vibration damper and the crankshaft pulley. Refer to Procedure 7-30.

7. Remove the four capscrews which hold the oil pan to the gear cover.
8. Loosen all remaining oil pan mounting capscrews four to five turns.

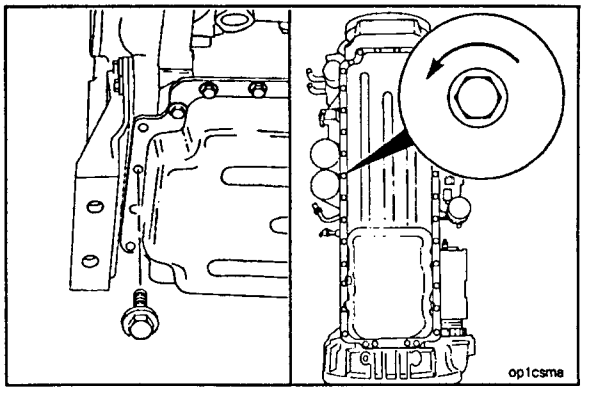

9. Use an overhead hoist or a hydraulic arm to support the engine.
10. Remove the capscrews which hold the front engine support to the crossmember of the equipment.

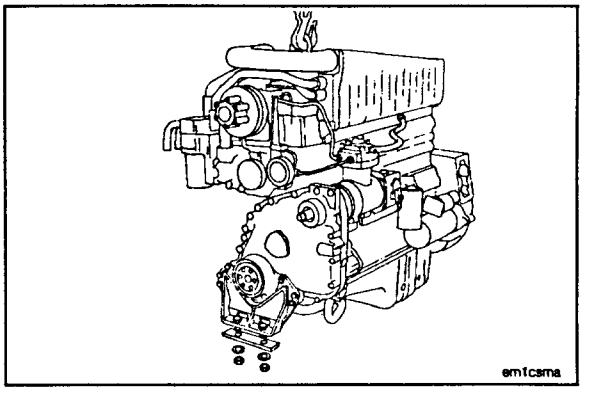

11. Remove the eight capscrews and the front engine support.

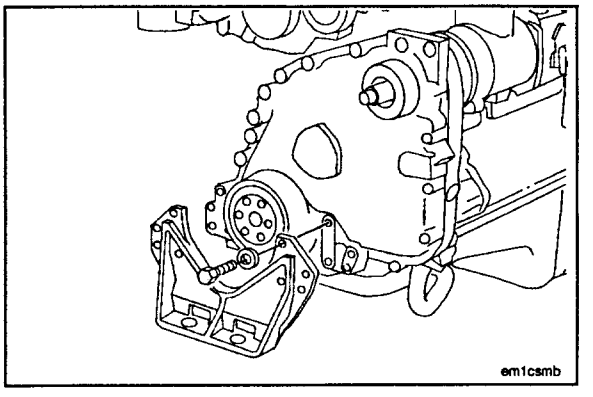

Caution: Use extreme care when releasing the oil pan gasket from the gear cover to prevent damage to the gasket. If the gasket is damaged, the oil pan must be removed and the gasket replaced. Refer to Procedure 2-16.

12. Insert a feeler gauge or a shim stock between the gear cover and the oil pan gasket. Move the feeler gauge or the shim stock back and forth to release the gasket from the gear cover.

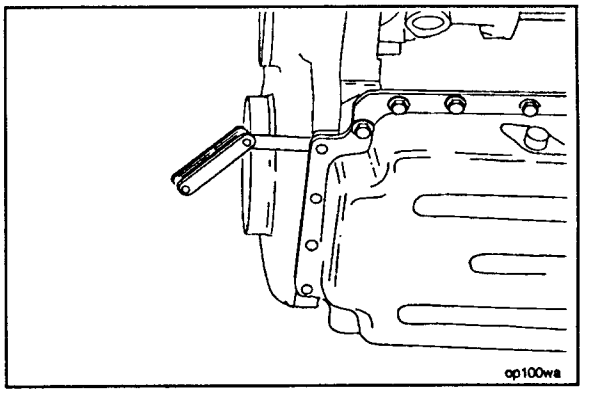

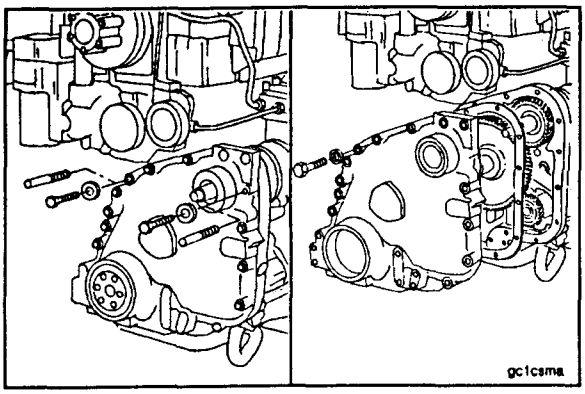

13. Remove one capscrew on each side of the gear cover, and install a 7/16 - 20 x 4-inch guide stud in each location to support the cover during removal.
14. Remove the remaining gear cover capscrews, and remove the gear cover.

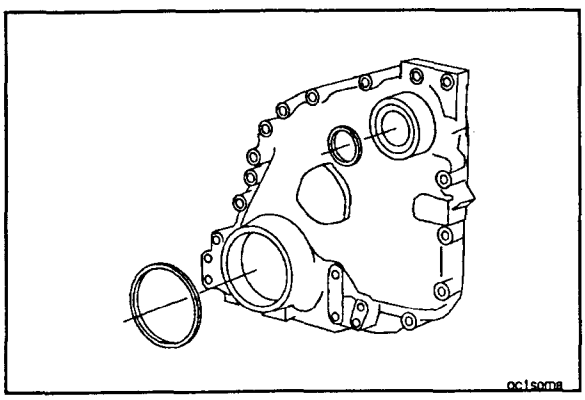

15. Remove the front crankshaft seal and the accessory drive seal.

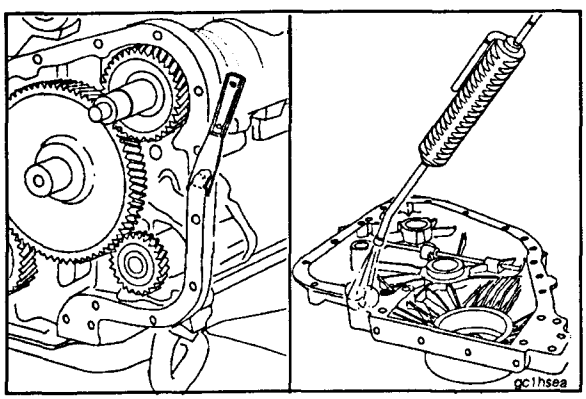

Clean and Inspect

1. Clean the gasket surface of the cylinder block.
2. Clean the gear cover.

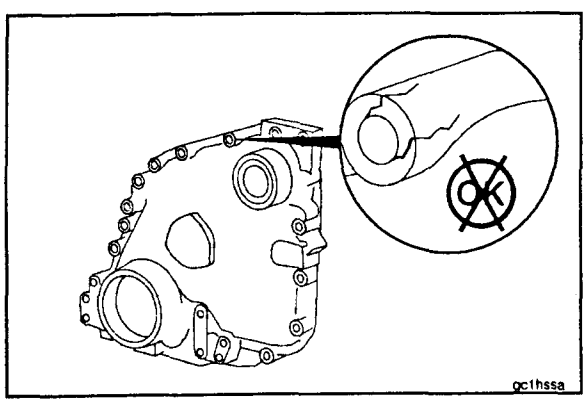

3. Inspect the gear cover for cracks or damage.

Install

1. Install one 7/16 - 20 x 4-inch guide stud in each side of the gear cover mounting flange to align the cover.
2. Install the gear cover gasket over the guide studs and the dowel pins.

NOTE: Use a film of Lubriplate 105 or its equivalent or grease to hold the gear cover gasket in place, if necessary.

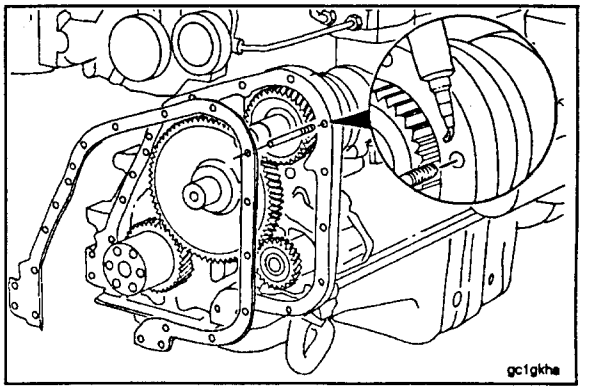

3. Install the gear cover and the mounting capscrews. Tighten the capscrews to 70 N•m [50 ft-lbs] torque.
4. Cut the ends of the gasket off even with the oil pan mounting flange.

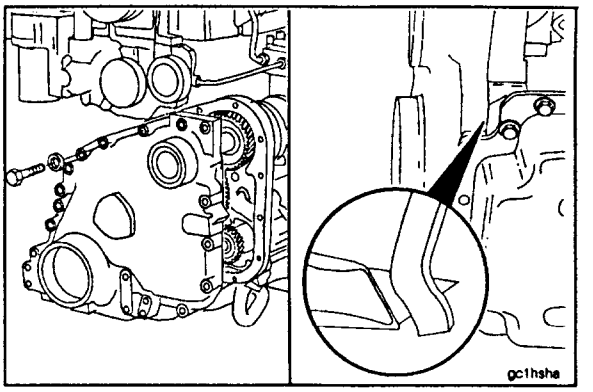

5. Mount a dial indicator on the front face of the crankshaft. Put the indicator plunger against the oil seal bore, and set the dial indicator at "0" (zero).
6. Rotate the crankshaft one complete revolution while monitoring the indicator. The total indicator reading **must not** exceed 0.25 mm [0.010-inch].

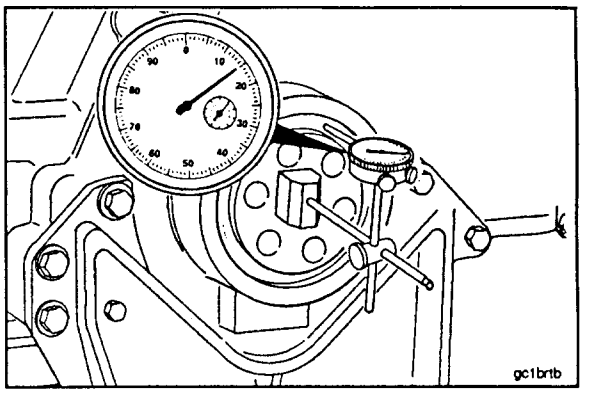

7. If the total indicator reading exceeds 0.25 mm [0.010-inch], remove the gear cover. Check the cover and the housing for nicks or burrs.
8. Clean the gear cover and the housing surfaces thoroughly.

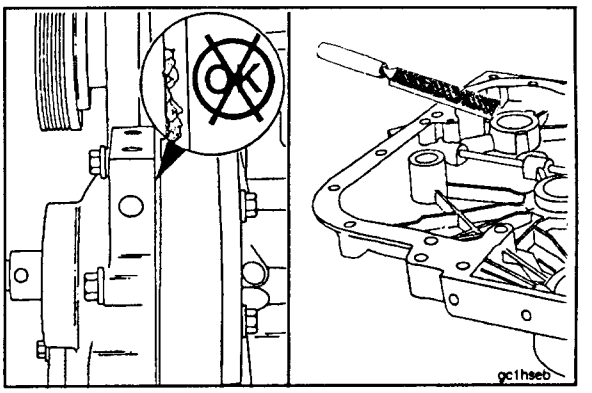

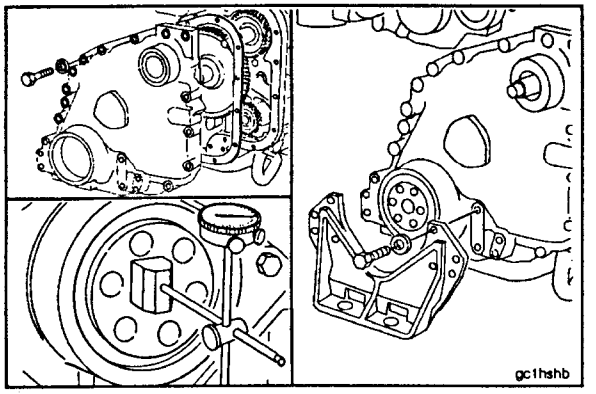

9. Repeat the gear cover installation procedure, and check the total indicator reading again.
10. Install the front engine support and the eight mounting capscrews. Tighten the capscrews to 70 N•m [50 ft-lbs] torque.

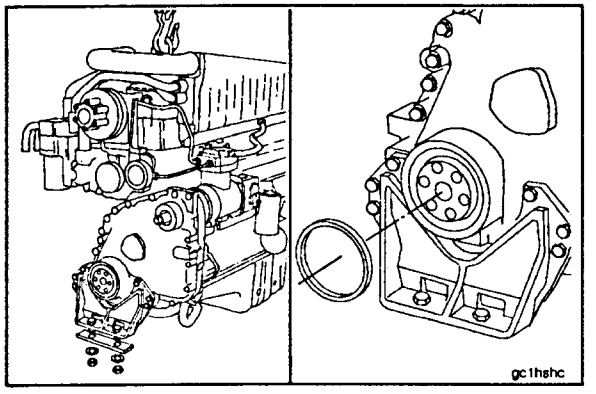

11. Lower the engine to the crossmember. Install and tighten the capscrews which hold the front engine support to the crossmember. Refer to the manufacturer's torque specifications.
12. Install the front crankshaft seal. Refer to Procedure 7-31.

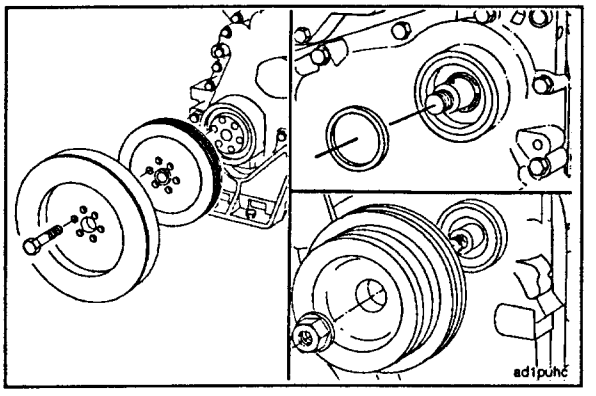

13. Install the crankshaft pulley and the vibration damper. Refer to Procedure 7-30.
14. Install the accessory drive seal. Refer to Procedure 7-27.
15. Install the dowel pin in the accessory drive shaft (if removed).
16. Install the accessory drive pulley. Refer to Procedure 7-25.

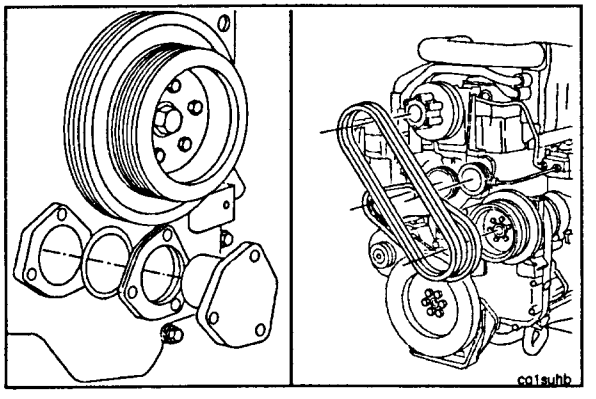

17. Install the camshaft support and the thrust bearing in the gear cover. Refer to Procedure 7-32.
18. Install the water pump belt and the fan drive belts. Refer to Procedures 1-19 and 1-20, respectively.

19. Install the fan. Refer to Procedure 1-18.
20. Install and adjust the alternator drive belt. Refer to Procedure 6-07.

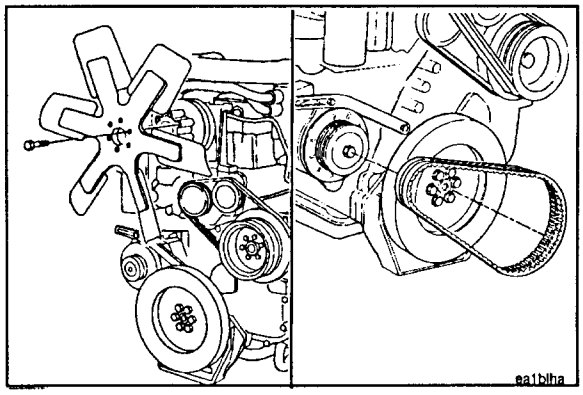

21. Install the four capscrews which hold the oil pan to the gear cover.

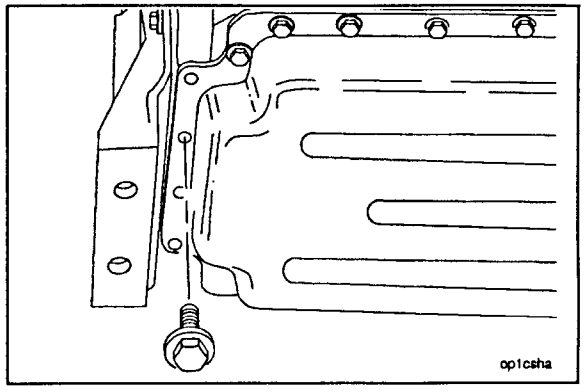

22. Tighten one of the 7/16-inch oil pan mounting capscrews on each side of the oil pan, halfway between the front and the rear of the oil pan, to 20 N•m [15 ft-lbs] torque.

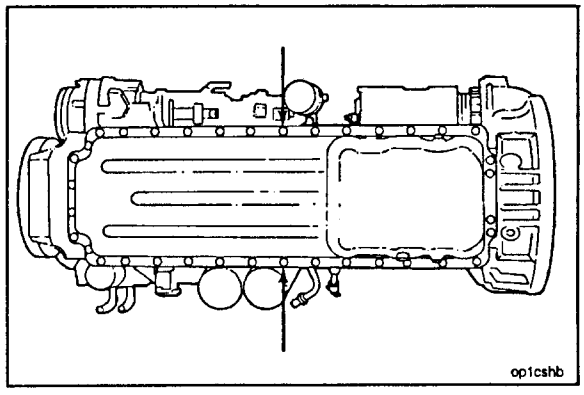

23. Tighten the four 5/16-inch capscrews in the rear of the oil pan to 25 N•m [20 ft-lbs] torque in the sequence shown.
24. Tighten the thirty-two (32) 7/16-inch capscrews to 70 N•m [50 ft-lbs] torque in the sequence shown.

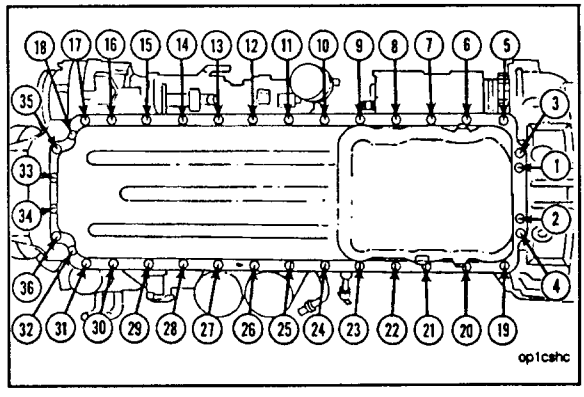

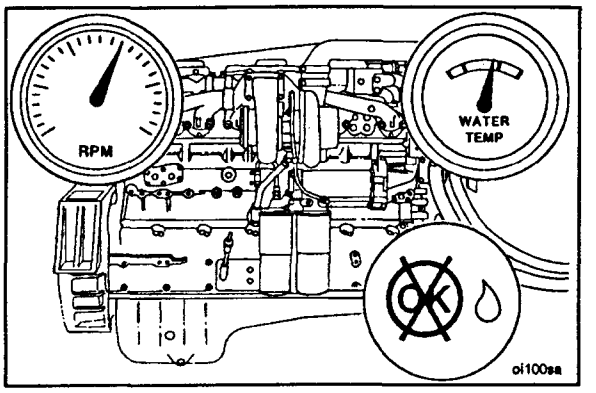

25. Operate the engine until it reaches a temperature of 80°C [180°F], and check for leaks.

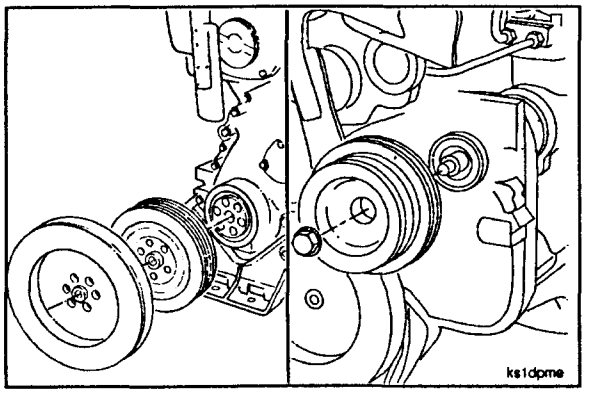

Crankshaft Gear - Replace (7-35)

Remove

1. Remove the vibration damper and the crankshaft pulley. Refer to Procedure 7-30.
2. Remove the accessory drive pulley. Refer to Procedure 7-25.

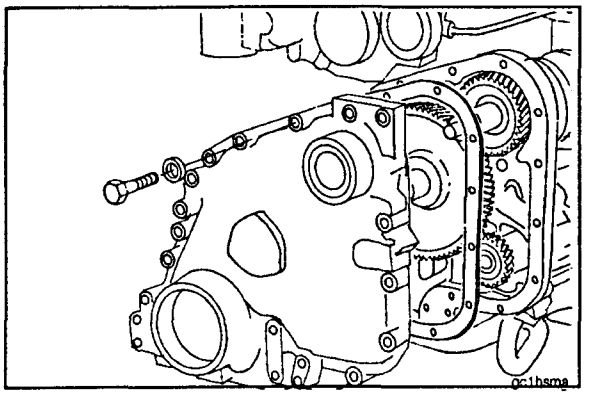

3. Remove the gear cover. Refer to Procedure 7-34.

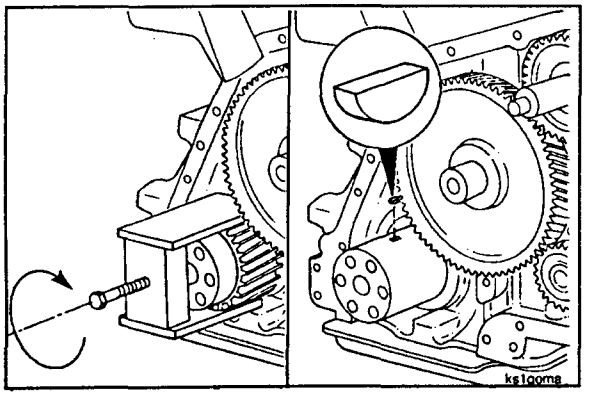

4. Install Part No. 3375840 Crankshaft Gear Puller and Part No. 3375839 Jaw on the gear.
5. Turn the pressure screw **clockwise** to remove the gear.

Caution: Do not damage the crankshaft when removing the key.

6. Use a flat chisel and a hammer to remove the crankshaft gear key.

Clean and Inspect

1. Visually inspect the crankshaft gear for cracks and broken or chipped teeth.

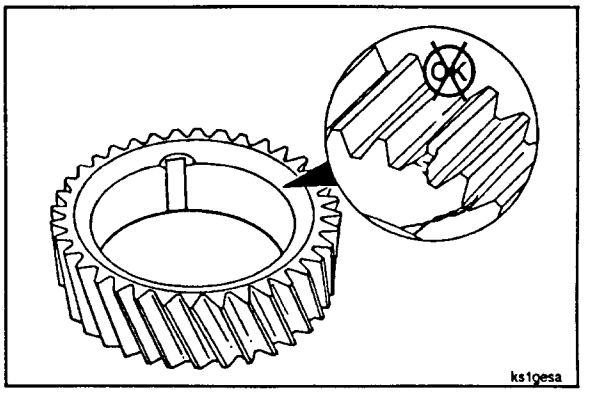

2. Remove any burrs with a fine crocus cloth.

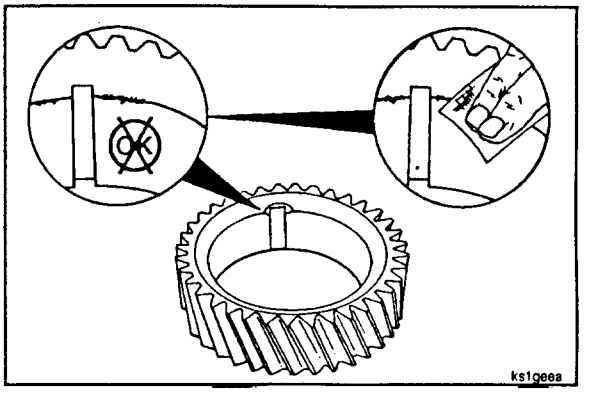

3. Visually inspect the crankshaft gear fit area for burrs or damage.
4. Remove any burrs with a fine crocus cloth.

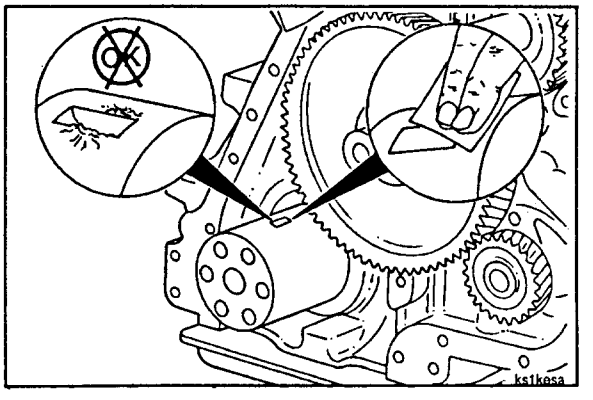

5. Measure the crankshaft gear bore.

Crankshaft Gear Bore I.D.		
mm		in
95.394	MIN	3.7557
95.415	MAX	3.7565

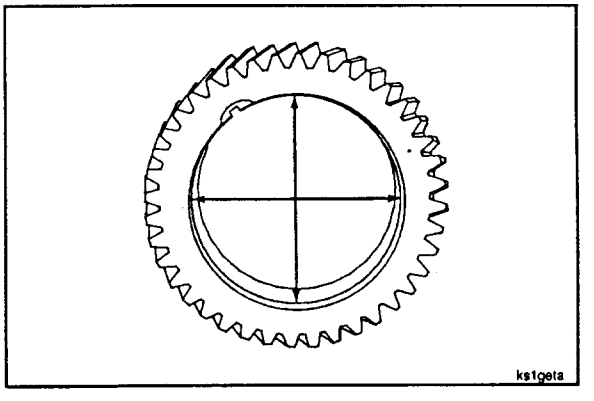

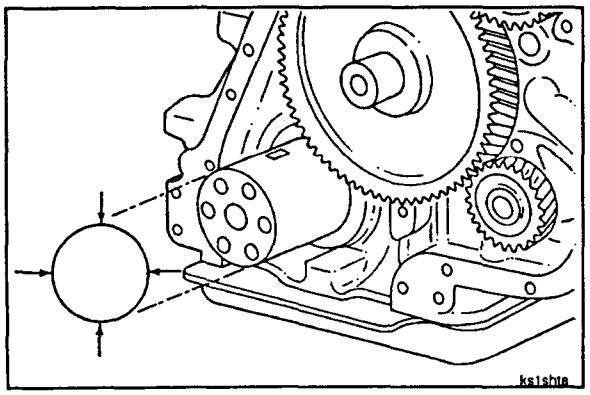

6. Measure the crankshaft gear fit area outside diameter.

Crankshaft Gear Fit Area O.D.		
mm		in
95.504	MIN	3.7600
95.522	MAX	3.7607

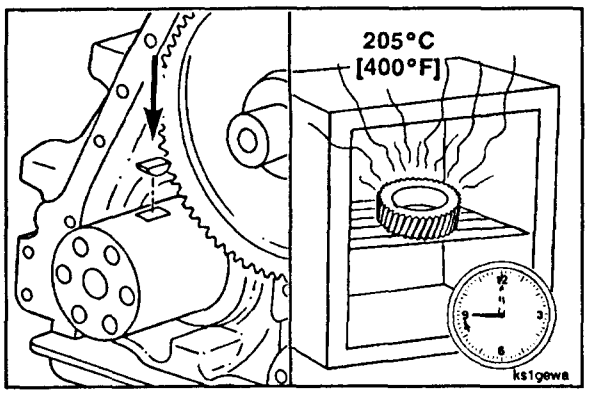

Install

1. Use a leather hammer to install a new key in the crankshaft keyway.
2. Heat the gear in an oven for a minimum of 1 hour at 205°C [400°F].

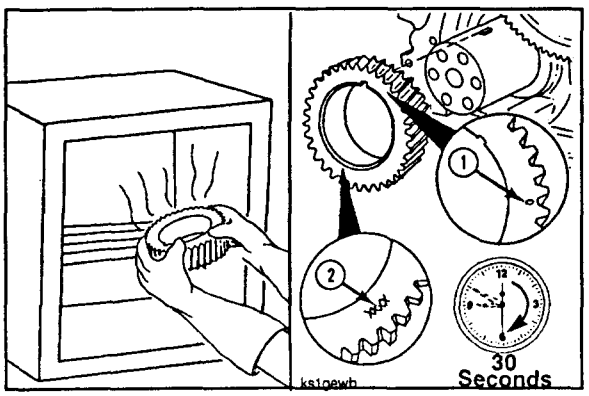

Caution: Wear protective gloves when handling parts that have been heated to prevent personal injury.

3. Remove the gear from the oven.

NOTE: The gear must be installed within 30 seconds after being removed from the oven.

Caution: The timing mark (1) and the gear part number (2) must be facing away from the crankshaft.

4. Align the gear keyway and the key, and install the gear firmly on the crankshaft.

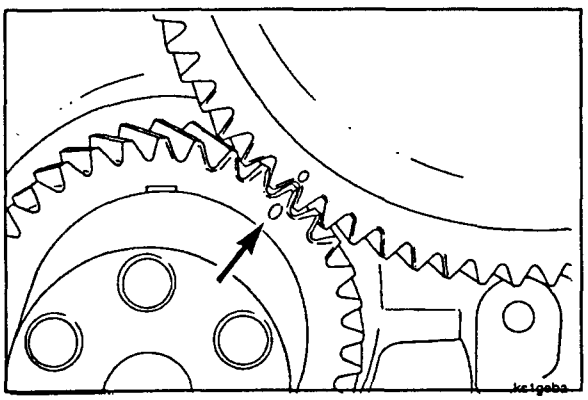

Caution: If any gears were rotated, it will be necessary to align the timing marks of the crankshaft and the camshaft gears. Refer to Procedure 7-36.

5. Install the gear cover. Refer to Procedure 7-34.
6. Install the accessory drive pulley. Refer to Procedure 7-25.
7. Install the crankshaft pulley and the vibration damper. Refer to Procedure 7-30.

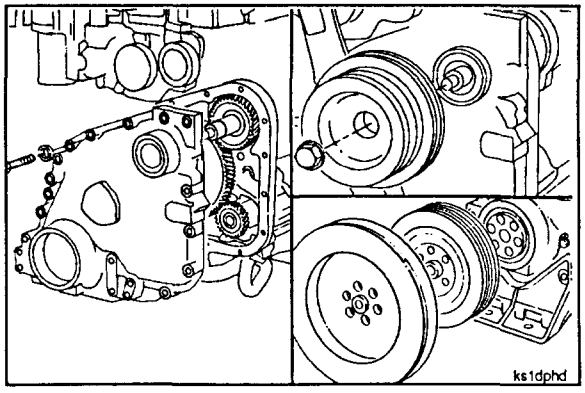

8. Operate the engine until it reaches a temperature of 80°C [180°F], and check for lubricating oil leaks.

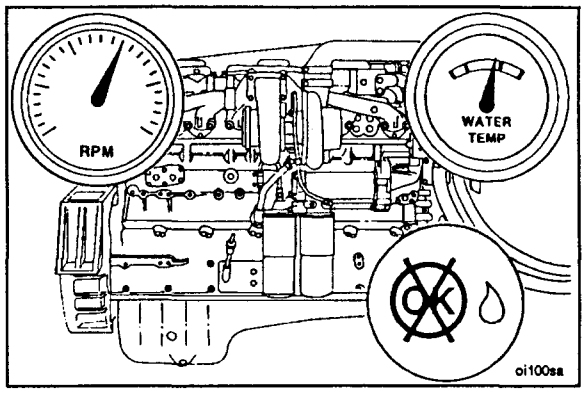

Camshaft - Replace (7-36)

Remove

1. Remove the accessory drive pulley. Refer to Procedure 7-25.
2. Remove the vibration damper and the crankshaft pulley. Refer to Procedure 7-30.

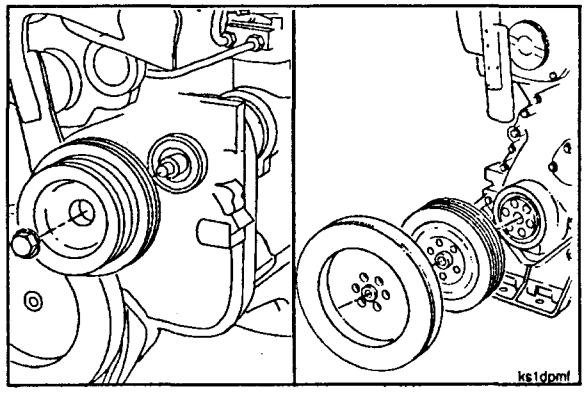

3. Remove the gear cover. Refer to Procedure 7-34.
4. Remove the cam follower assemblies. Refer to Procedure 7-13.

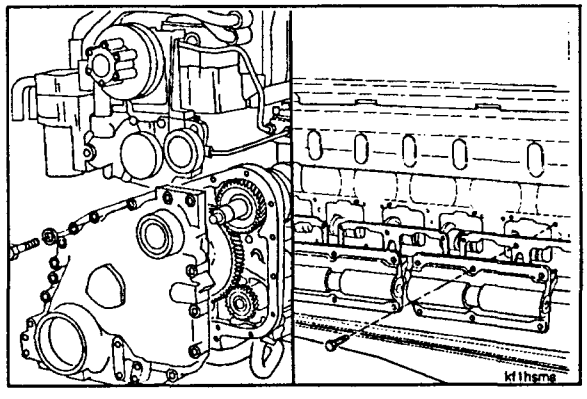

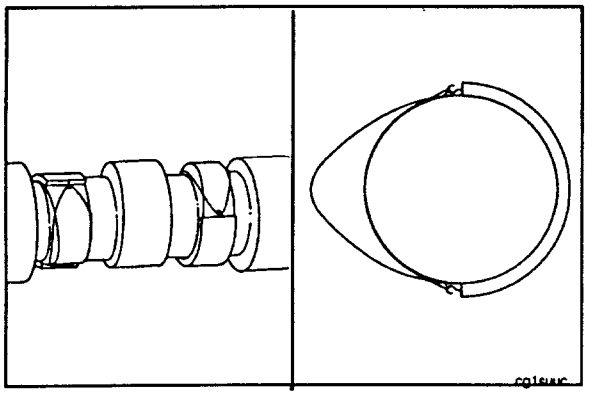

5. Install four camshaft pilots, Part No. 3375268, over the outer base circle of the valve lobes between the camshaft journals.
6. Use a rubber band to hold the installation pilots in place. The rubber band **must** straddle the valve lobe.

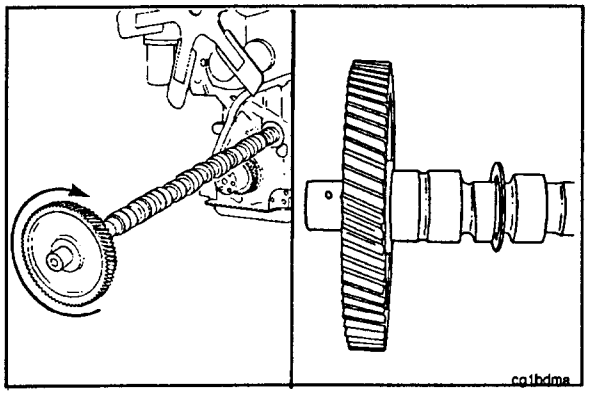

7. Use one hand to slowly rotate and pull the camshaft from the cylinder block and the other hand to balance the camshaft as it is removed.
8. Remove the camshaft thrust washer from the camshaft.

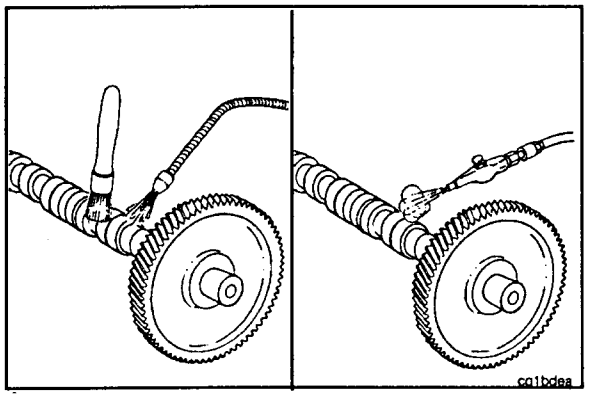

Clean and Inspect

1. Clean the camshaft with solvent, and dry with compressed air.

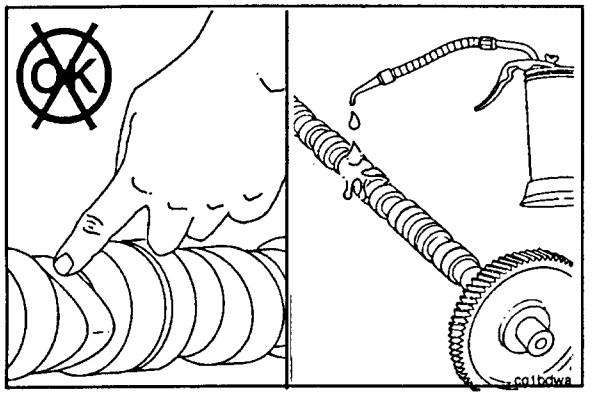

NOTE: After the camshaft has been steam cleaned, do **not** touch the machined surfaces with bare hands. This will cause rust to form. Lubricate the camshaft with clean 15W-40 oil before handling.

2. Use a feeler gauge to measure the clearance between the gear and the shoulder on the camshaft.

NOTE: The clearance must not exceed 0.13 mm [0.005-inch].

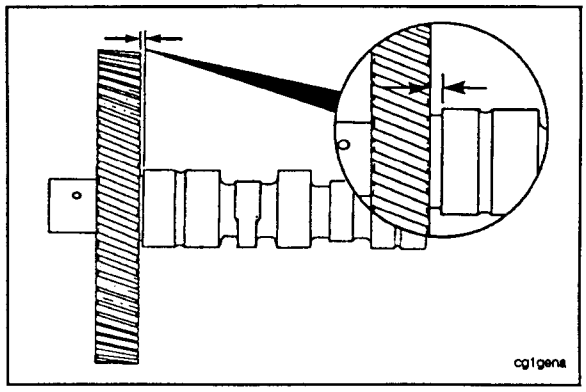

3. Measure the seven camshaft bushing journals.

Camshaft Bushing Journal O.D.		
mm		in
63.37	MIN	2.495
63.42	MAX	2.497

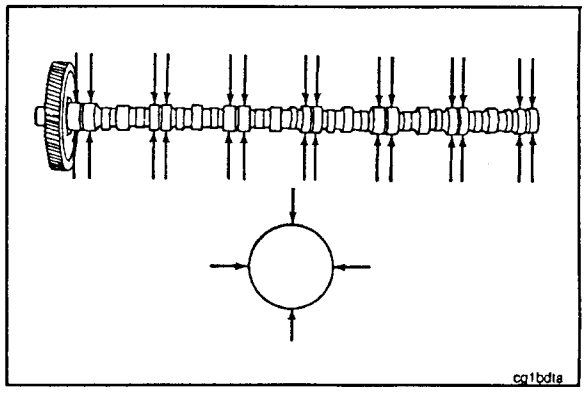

4. Visually inspect the camshaft lobes for cracks, scratches, or other damage.

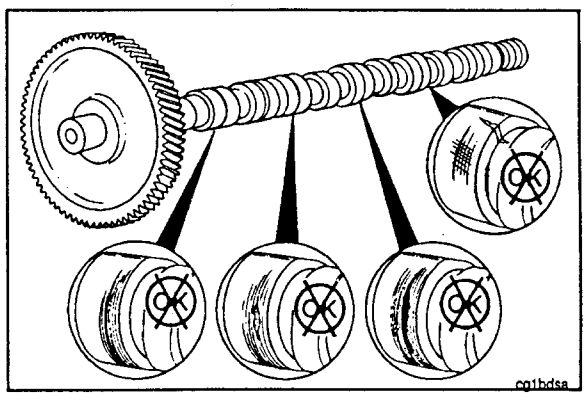

5. Measure the camshaft thrust washer.

Camshaft Thrust Washer Thickness		
mm		in
2.29	MIN	0.090
2.49	MAX	0.098

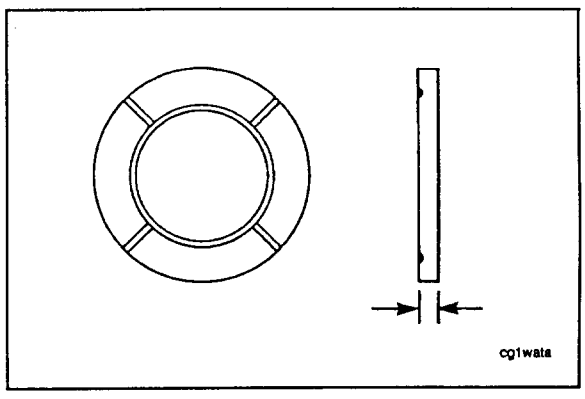

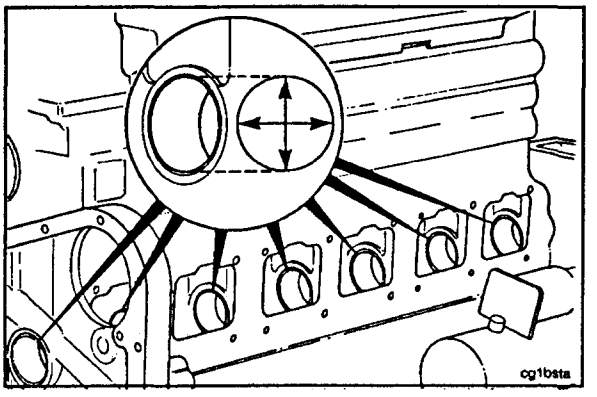

6. Measure the camshaft bushings in the cylinder block. Refer to Procedure 7-38.

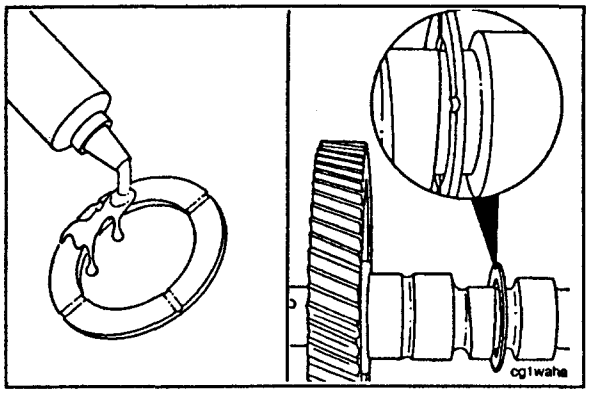

Install

1. Apply a film of Lubriplate 105 or its equivalent to both sides of the camshaft thrust washer.

Caution: The oil grooves on the thrust washer must be toward the camshaft gear to prevent thrust washer failure.

2. Install the thrust washer on the camshaft.

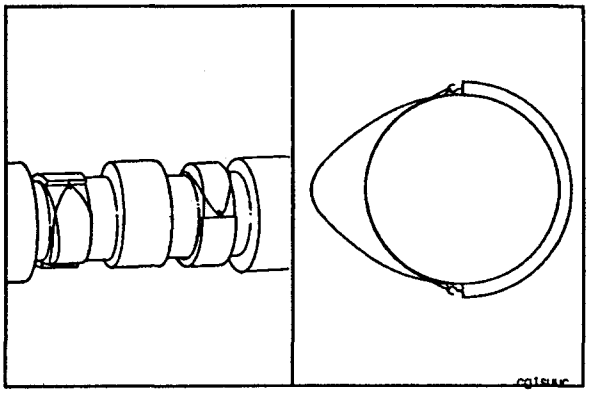

3. Install four camshaft pilots, Part No. 3375268, over the outer base circle of the valve lobes between the camshaft journals.
4. Use a rubber band to hold the installation pilots in place. The rubber band **must** straddle the valve lobes.

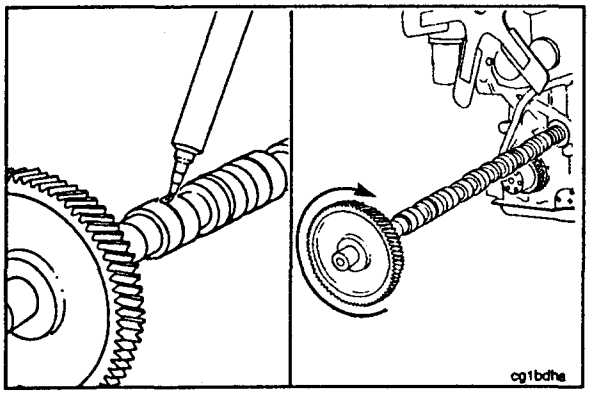

5. Apply a film of Lubriplate 105 or its equivalent to the camshaft journals and the camshaft bushings.
6. Rotate the camshaft slowly as it is being installed in the cylinder block.

2. Use a feeler gauge to measure the clearance between the gear and the shoulder on the camshaft.

NOTE: The clearance **must not** exceed 0.13 mm [0.005-inch].

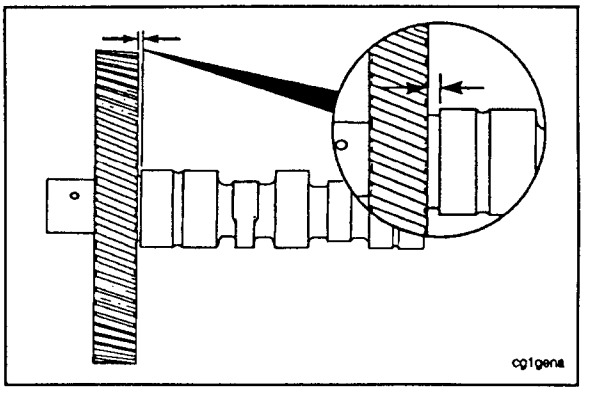

3. Measure the seven camshaft bushing journals.

Camshaft Bushing Journal O.D.		
mm		in
63.37	MIN	2.495
63.42	MAX	2.497

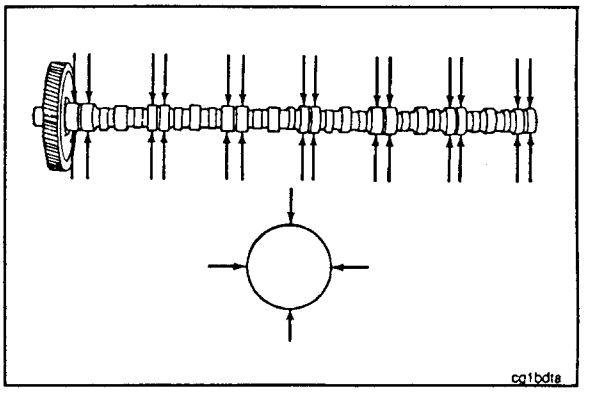

4. Visually inspect the camshaft lobes for cracks, scratches, or other damage.

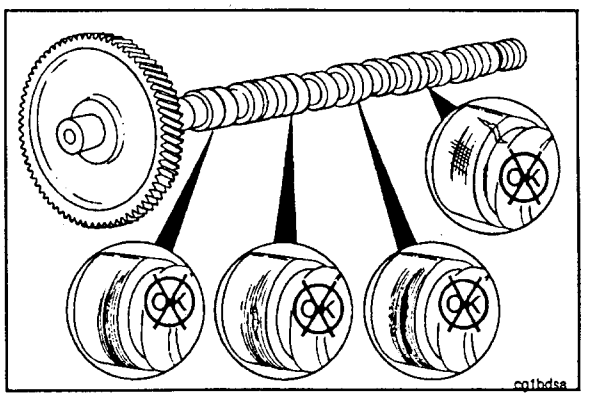

5. Measure the camshaft thrust washer.

Camshaft Thrust Washer Thickness		
mm		in
2.29	MIN	0.090
2.49	MAX	0.098

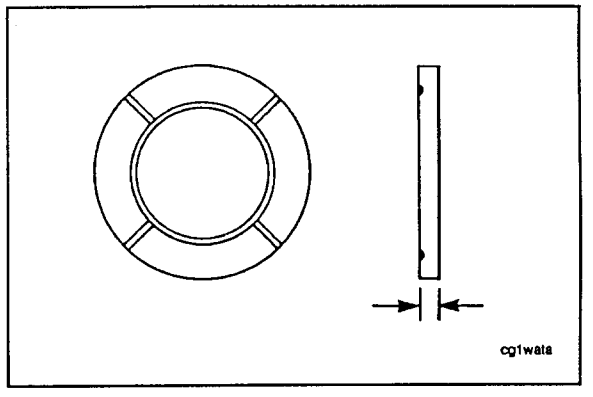

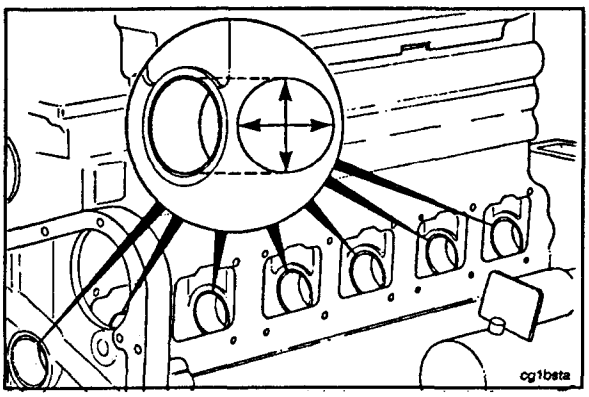

6. Measure the camshaft bushings in the cylinder block. Refer to Procedure 7-38.

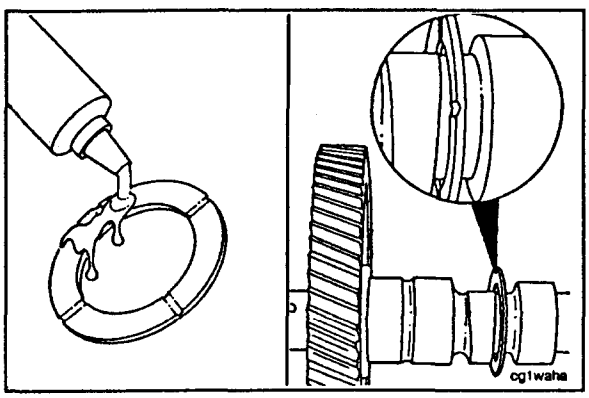

Install

1. Apply a film of Lubriplate 105 or its equivalent to both sides of the camshaft thrust washer.

Caution: The oil grooves on the thrust washer must be toward the camshaft gear to prevent thrust washer failure.

2. Install the thrust washer on the camshaft.

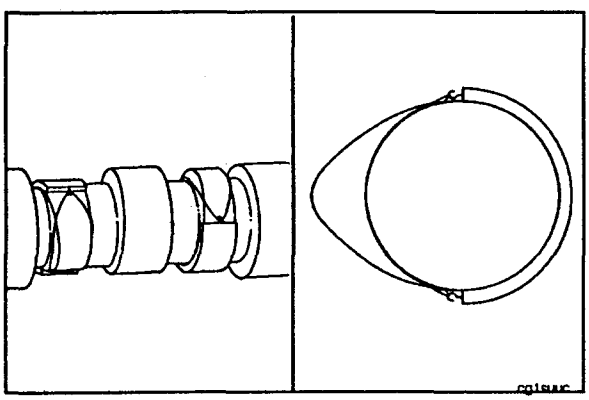

3. Install four camshaft pilots, Part No. 3375268, over the outer base circle of the valve lobes between the camshaft journals.
4. Use a rubber band to hold the installation pilots in place. The rubber band must straddle the valve lobes.

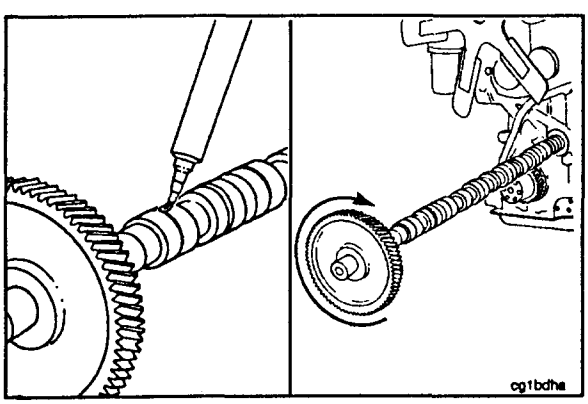

5. Apply a film of Lubriplate 105 or its equivalent to the camshaft journals and the camshaft bushings.
6. Rotate the camshaft slowly as it is being installed in the cylinder block.

7. Align the "O" mark on the camshaft gear with the "O" mark on the crankshaft gear.
8. After aligning the "O" marks, push the camshaft in the bore until the thrust washer fits against the cylinder block.

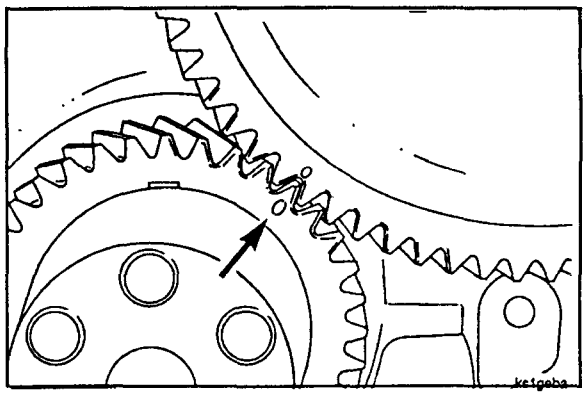

9. Remove the camshaft installation pilots. Do **not** allow the rubber bands to fall into the camshaft cavity of the cylinder block when removing the installation pilots.

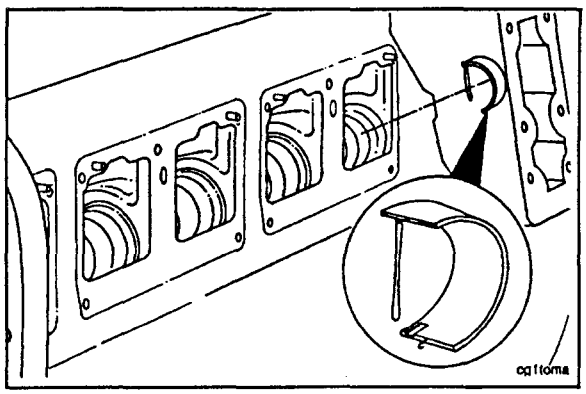

10. Use a dial indicator to check the backlash between the camshaft gear and the crankshaft gear.
11. Put the tip of the dial indicator against a tooth on the camshaft gear.

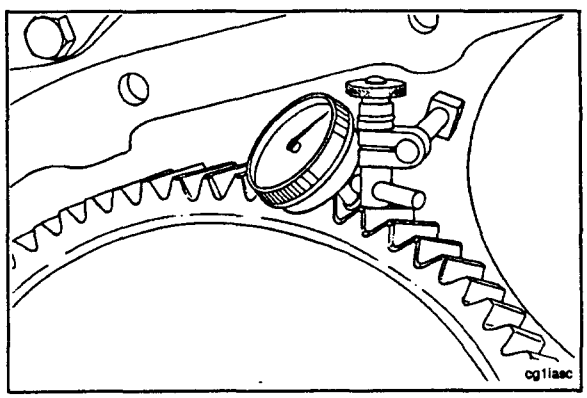

12. Turn the camshaft gear by hand as far as it will freely move, and set the dial indicator at "0" (zero).

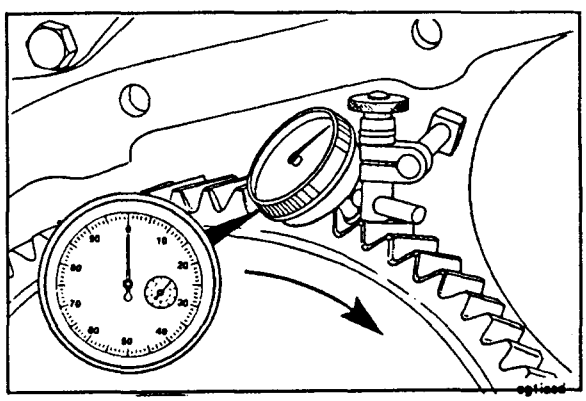

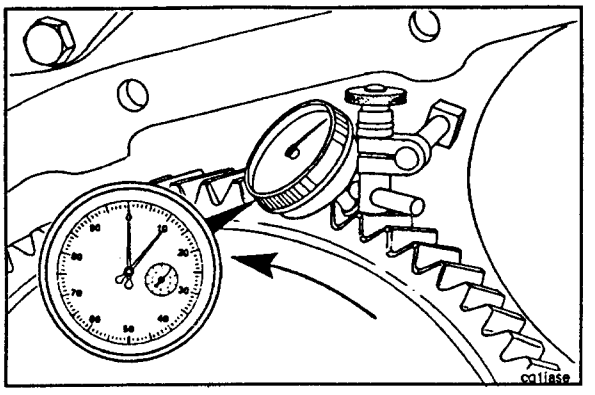

13. Turn the camshaft gear by hand in the **opposite** direction as far as it will freely move, and read the dial indicator.

Backlash Between the Camshaft and the Crankshaft Gears		
mm		in
0.05	MIN	0.002
0.50	MAX	0.020

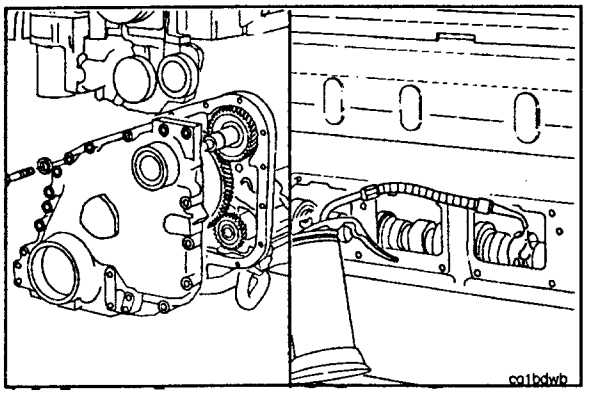

14. Install the gear cover. Refer to Procedure 7-34.
15. Lubricate the valve and the injector lobes with 15W-40 lubricating oil, and install the cam follower assemblies. Refer to Procedure 7-13.

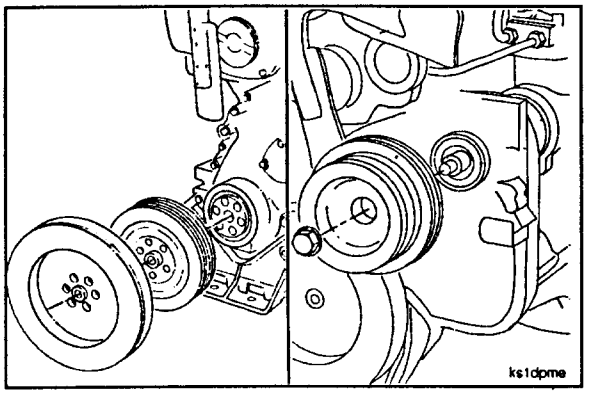

16. Install the crankshaft pulley and the vibration damper. Refer to Procedure 7-30.
17. Install the accessory drive pulley. Refer to Procedure 7-25 .

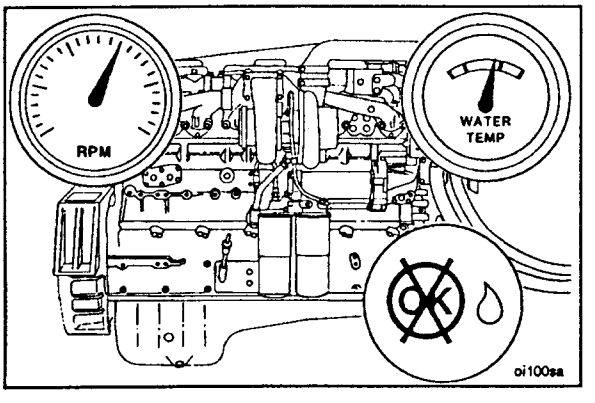

18. Operate the engine until it reaches a temperature of 80°C [180°F], and check for coolant or lubricating oil leaks.

Camshaft Gear - Replace (7-37)

Remove (Camshaft Removed)

1. Remove the camshaft. Refer to Procedure 7-36.

Caution: Place a wooden block under the camshaft to avoid damage as the camshaft drops free from the cam gear.

2. Install the camshaft and gear assembly in a hydraulic press. Place V-blocks under the gear. Make sure the V-blocks support the hub area of the gear.

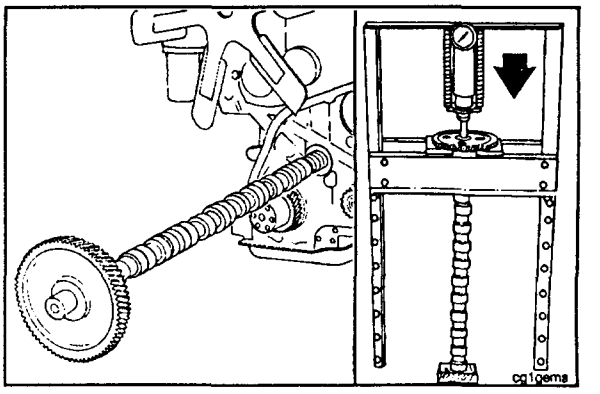

Caution: Do not use a heating torch to remove the gear. If you use a heating torch, a new gear must be installed.

3. Push the shaft from the gear.

NOTE: If the camshaft key is marked with an arrow, record the direction in which it is pointed.

4. Use a flat chisel and hammer to remove the camshaft key.

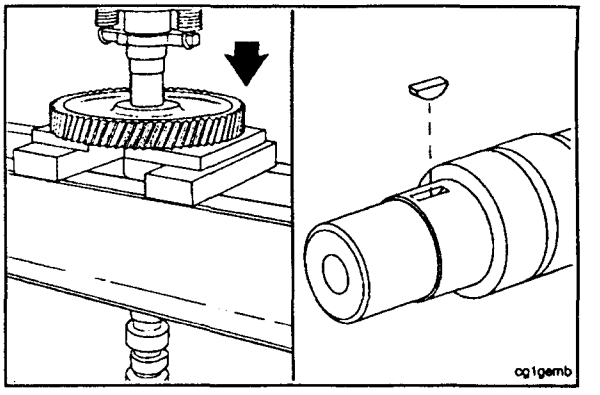

Clean and Inspect

Caution: If the inside diameter of the gear is damaged or has fretting in excess of a 3.175 mm [0.125-inch] wide band, do not use the gear. Fretting or damage can result in gear movement on the camshaft nose which can cause camshaft nose failure.

1. Visually inspect the camshaft gear for cracks, chipped, or broken teeth.
2. Inspect the bore of the gear for fretting or burrs.

NOTE: If the fretting, burrs, or raised material can not be removed with a fine crocus cloth, replace the gear.

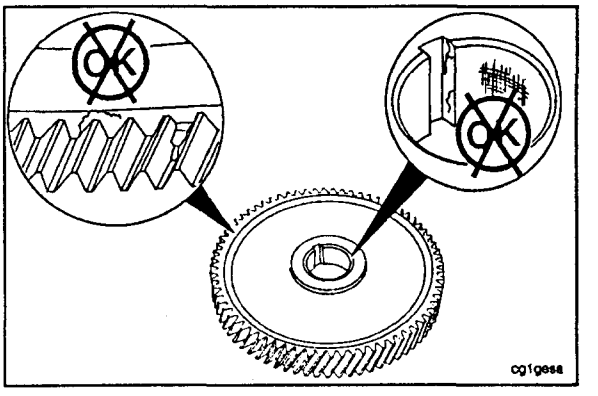

3. Inspect the gear keyway for burrs.
4. Remove burrs with a fine crocus cloth.

NOTE: If the keyway is damaged or the burrs can not be removed with a fine crocus cloth, the gear must be replaced.

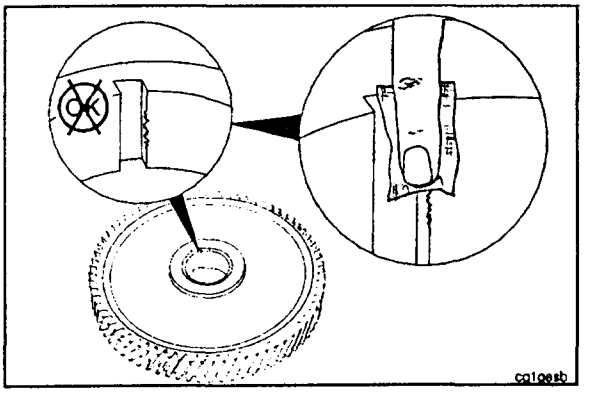

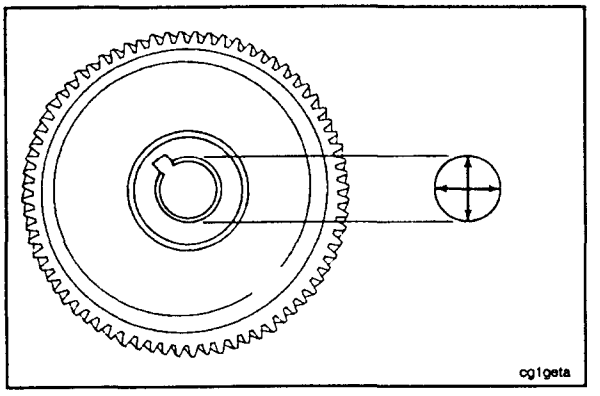

5. Measure the gear bore.

Camshaft Gear Bore I.D.	mm		in.
Flanged	44.455	MIN	1.7502
Camshaft	44.475	MAX	1.7510
Flangeless	45.662	MIN	1.7977
Camshaft	45.682	MAX	1.7985

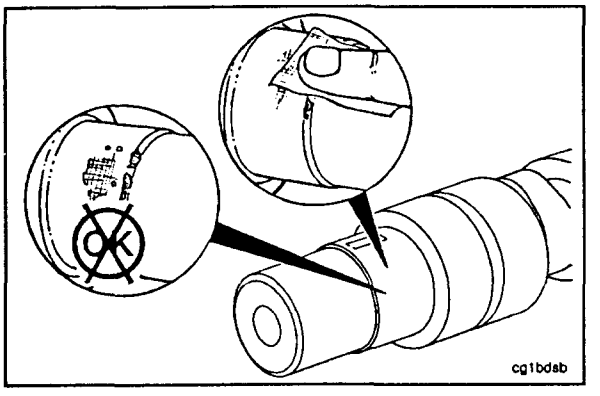

Caution: If the area of fretting is longer than a 3.175 mm [0.125-inch] wide longitudinal band, do not use the camshaft. Fretting or damage can result in gear movement on the camshaft nose and can cause camshaft nose failure.

6. Visually inspect the camshaft nose in the gear fit area for fretting or burrs.

NOTE: If fretting or burrs can **not** be removed with a fine crocus cloth, replace the camshaft.

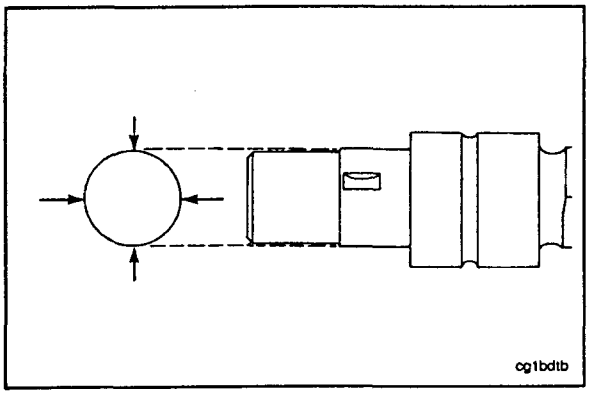

7. Measure the camshaft nose in the gear press fit area.

Camshaft Gear Press Fit O.D.	mm		in.
Flanged	44.526	MIN	1.7530
Camshaft	44.539	MAX	1.7535
Flangeless	45.733	MIN	1.8005
Camshaft	45.745	MAX	1.8010

Camshaft Keys

3/4 Inch Key Part No.	Offset [mm]	Offset Inch	Timing Change	Change in Push Rod Travel At 19° BTDC [mm]	Change in Push Rod Travel At 19° BTDC Inch
3021601	None		None	None	
3021595	[0.15]	[0.0060]	Retard	[0.07]	[0.0030]
3021593	[0.19]	[0.0075]	Retard	[0.09]	[0.0037]
3021592	[0.29]	[0.0115]	Retard	[0.14]	[0.0057]
3021594	[0.47]	[0.0185]	Retard	[0.23]	[0.0092]
3021596	[0.65]	[0.0255]	Retard	[0.32]	[0.0127]
3021598	[0.79]	[0.0310]	Retard	[0.39]	[0.0155]
3021597	[0.99]	[0.0390]	Retard	[0.49]	[0.0195]
3021600	[1.30]	[0.0510]	Retard	[0.65]	[0.0255]
3021599	[0.29]	[0.0115]	Advance	[0.14]	[0.0057]
3022352*	[0.47]	[0.0185]	Advance	[0.23]	[0.0092]
3022353*	[0.79]	[0.0310]	Advance	[0.39]	[0.0155]

*For Mechanical Variable Timing (MVT) Engines

Install Gear (Camshaft Removed)

NOTE: The accompanying chart lists different camshaft key part numbers, the degree of offset, and the approximate injector timing change from nominal.

1. Use a leather hammer to install the camshaft gear key.

NOTE: If the same camshaft and gear are used again, use the same part number key as the one that was removed. Make sure the arrow on the key is pointing in the same direction as when it was removed.

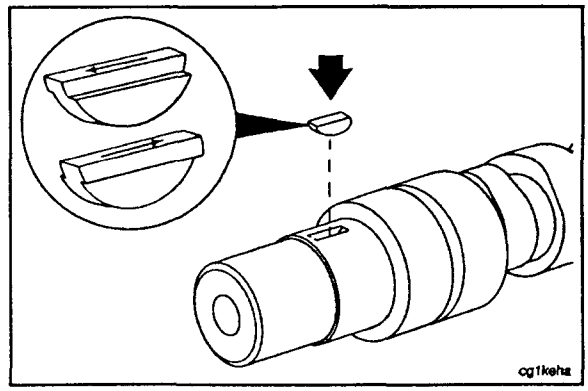

2. Put the camshaft in a vertical position with the gear fit area (nose) pointing up.
3. Apply Lubriplate 105 or its equivalent to the camshaft gear fit area before installing the gear.

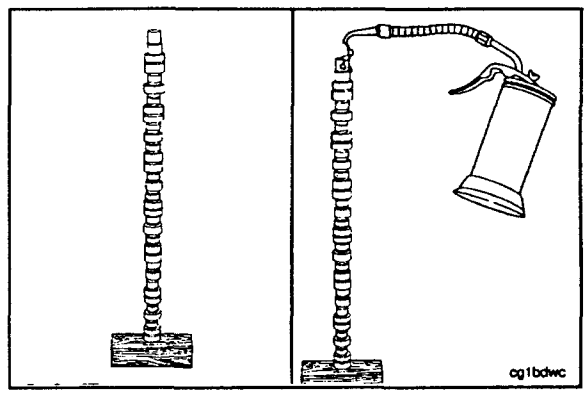

Caution: Wear protective gloves when handling parts that have been heated to prevent personal injury.

4. Heat the gear in an oven at 260°C [500°F] for a minimum of 1 hour.
5. Remove the gear from the oven.

NOTE: Install the gear on the camshaft within 30 seconds after it is removed from the oven.

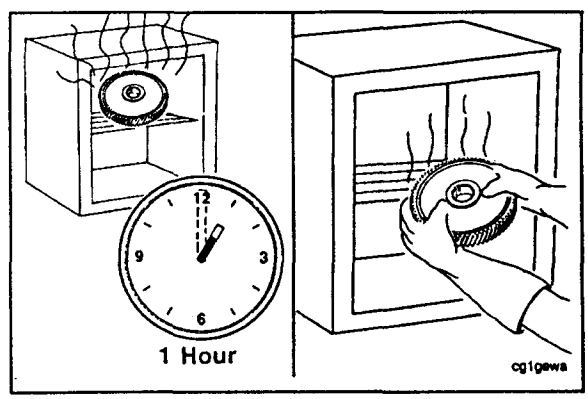

Caution: The timing marks and the gear part number must be facing away from the camshaft.

6. Align the gear keyway with the key in the camshaft, and install the gear.

NOTE: Keep the camshaft in a vertical position with the gear up until the gear has cooled.

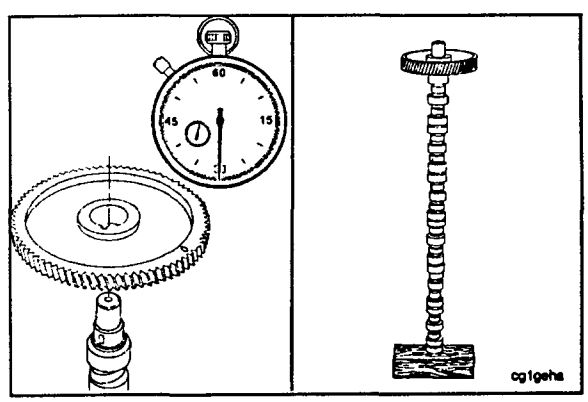

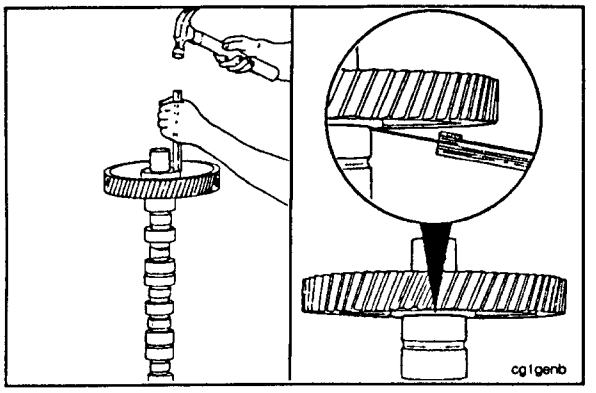

7. If the gear does **not** seat against the locating shoulder on the camshaft, use a brass drift and a hammer to drive the gear up against the shoulder.
8. Use a feeler gauge to check the clearance between the camshaft gear and the shoulder. The clearance must not exceed 0.13 mm [0.005-inch].

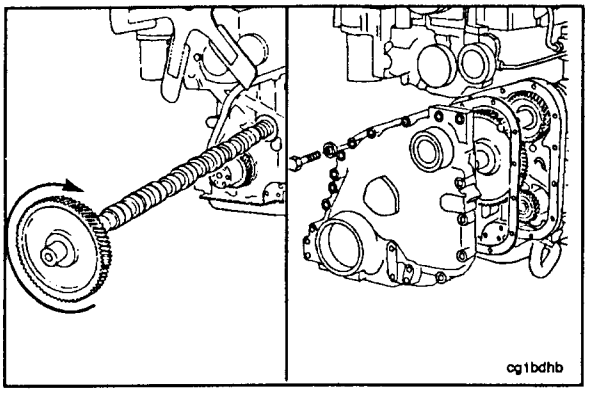

9. Install the camshaft. Refer to Procedure 7-36.
10. Install the gear cover and related components. Refer to Procedure 7-34.

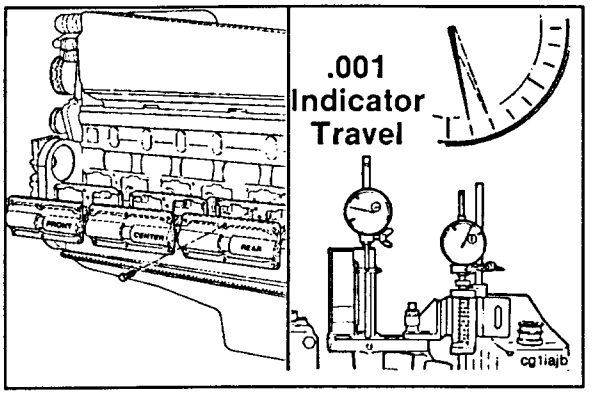

11. Install the cam follower assemblies. Refer to Procedure 7-13.
12. Check the engine timing. Refer to Procedure 7-16.

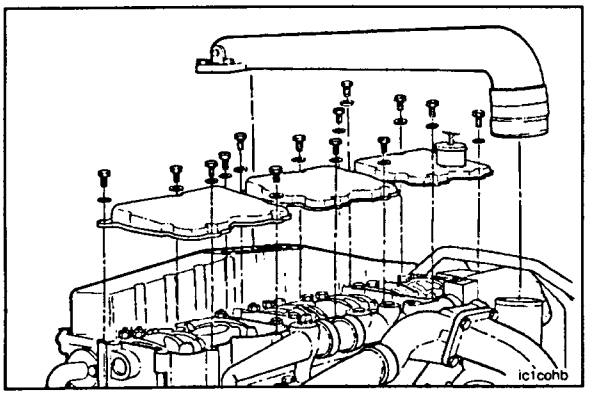

13. Install the rocker housings and related components. Refer to Procedure 7-09.

Camshaft Bushing - Replace (7-38)

Remove

1. Remove the accessory drive pulley. Refer to Procedure 7-25.
2. Remove the vibration damper and the crankshaft pulley. Refer to Procedure 7-30.

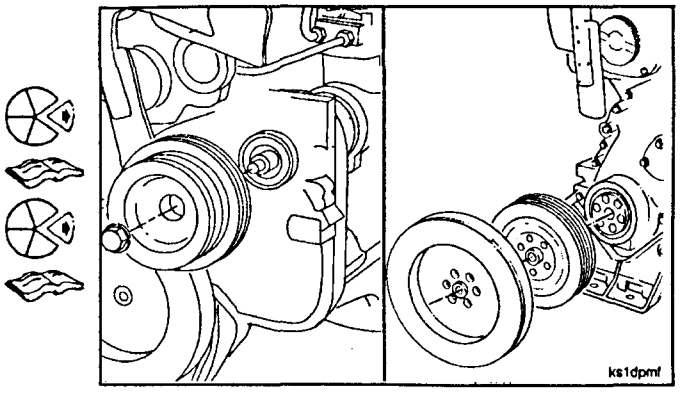

3. Remove the gear cover. Refer to Procedure 7-34.
4. Remove the cam followers. Refer to Procedure 7-13.

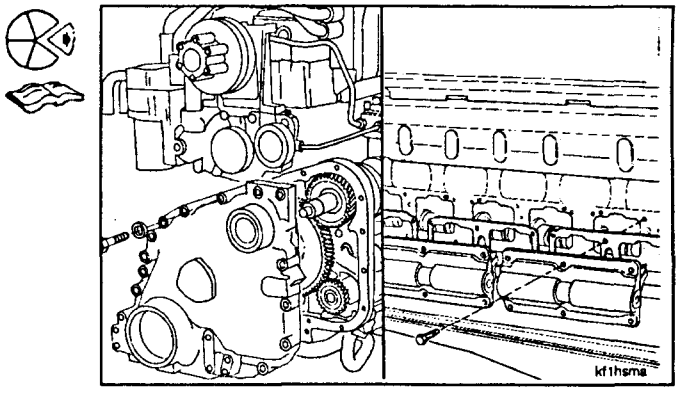

5. Remove the camshaft. Refer to Procedure 7-36.
6. Use Part No. ST-1228 Camshaft Bushing Driver Set and Part No. 3375861 Driver to remove bushings No. 1 through No. 6.

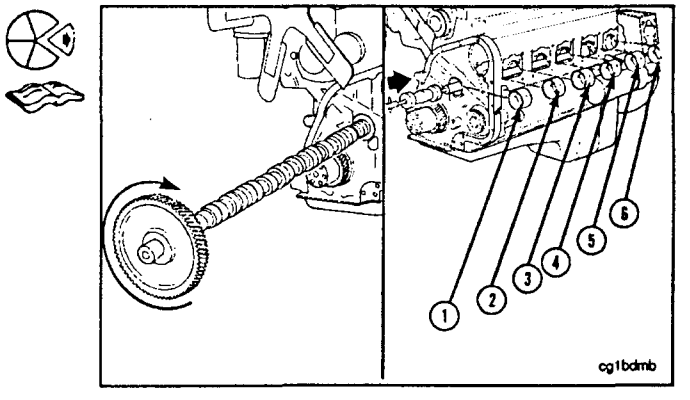

7. Use Part No. ST-1228 Camshaft Bushing Driver Set and Part No. 3375863 Puller to remove the No. 7 bushing.
8. Remove the No. 1 bushing first and then the remaining six (6) bushings in order from front to rear.

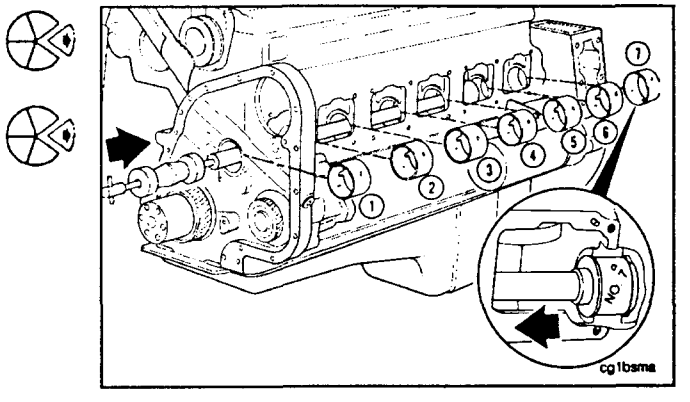

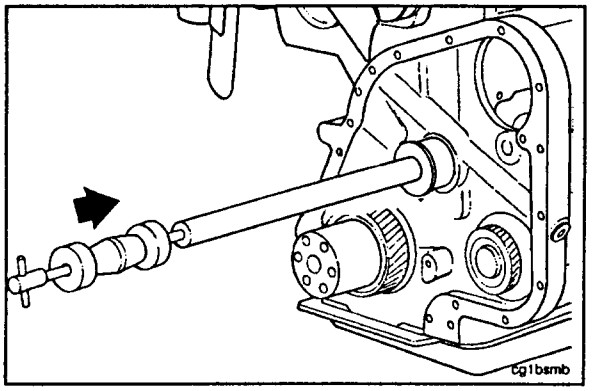

9. To remove bushings No. 1 through No. 6, insert the tool assembly through the camshaft bore until the driver is against the bushing.
10. Hit the slide hammer against the shaft assembly until the bushing is driven from the bore.

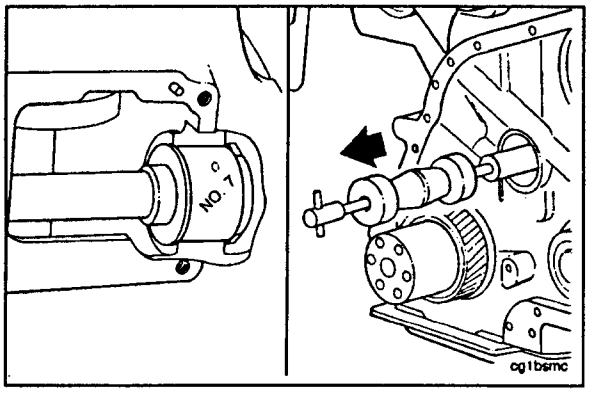

11. To remove the No. 7 bushing, insert the tool assembly through the bore until the pins of the puller assembly are engaged behind the bushing.
12. Hit the slide hammer against the T-handle until the bushing is removed from the bore.

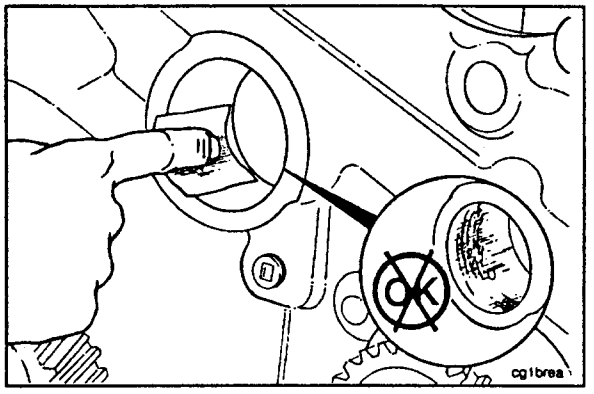

Clean and Inspect

1. Use a fine emery cloth to remove burrs, and clean the bushing bores.

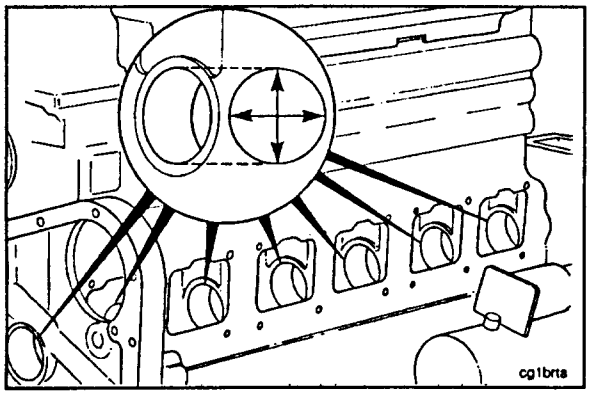

2. Measure the cylinder block camshaft bore inside diameter.

Camshaft Bore I.D.		
mm		in
68.237	MIN	2.6865
68.262	MAX	2.6875

Install

Caution: Incorrect installation will result in severe damage to the engine. Refer to the numbers stamped on the bushings to determine the correct cylinder block cam bore location in which the bushings are to be installed.

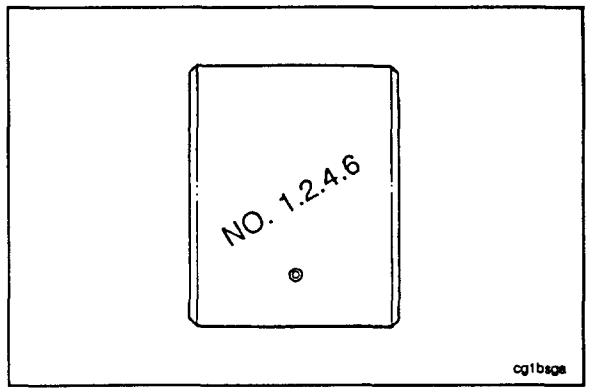

1. Install the camshaft bushings in the following order: No. 7, No. 6, No. 5, No. 4, No. 3, No. 2, and No. 1.

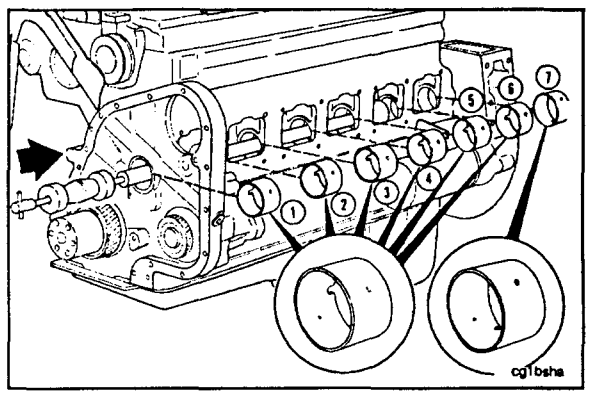

Install No. 7 Bushing

Caution: The locating notch in the No. 7 bushing must be toward the rear of the engine and be located at the 6:00 o'clock position.

1. Install the tool assembly through the camshaft bore until Part No. 3375861 Driver is in the cavity between the No. 6 and the No. 7 bores.
2. Install Part No. ST-1228-6 Camshaft Bushing Guide in the No. 5 and the No. 6 bores.

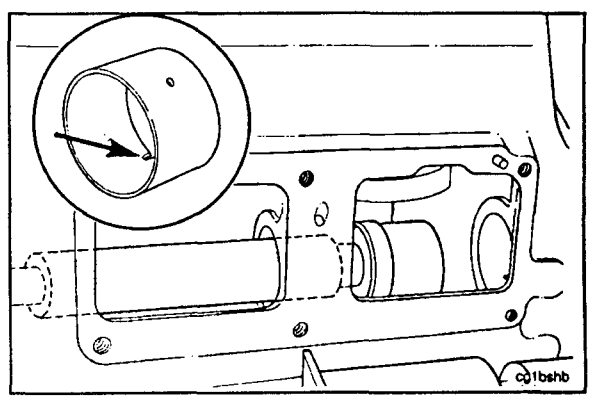

3. Install the bushing marked No. 7 on the driver with the location notch to the rear of the engine and at the 6:00 o'clock position.
4. Push the bushing in the bore until the oil holes in the bushing are aligned with the drillings in the bore.

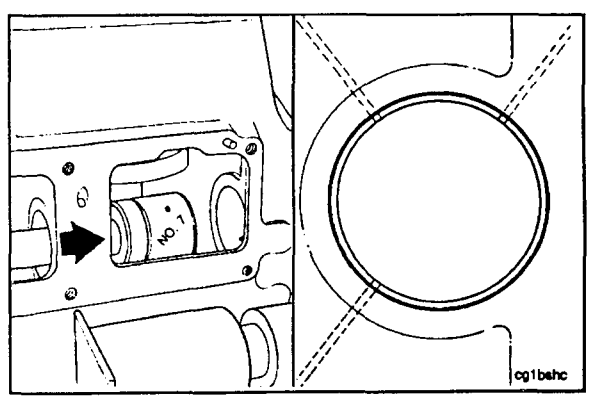

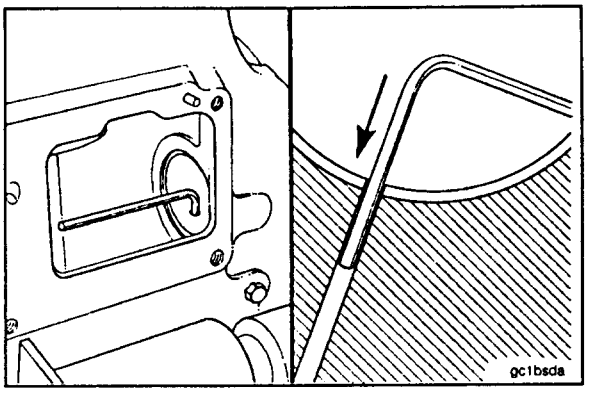

5. Use a 2.39 mm [0.094-inch] diameter rod to check the position and the location of the oil hole in the bushing and the cylinder block.
6. The rod **must** pass through the oil holes in the bushing and into the oil supply drillings in the cylinder block.

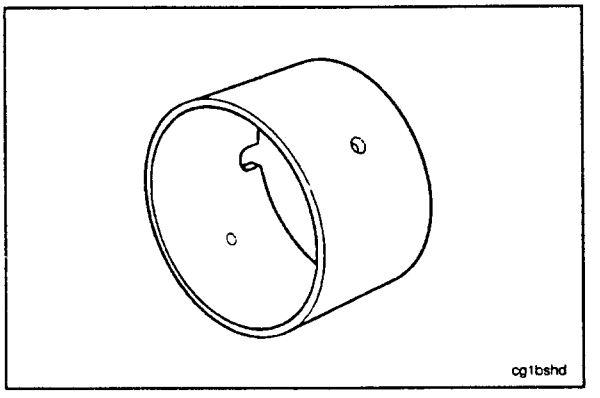

Install No. 6 Through No. 2 Bushings

Caution: The locating notch in the No. 2 through the No. 6 bushings must face the rear of the engine and be located at the 9:00 o'clock position when looking at it from the front of the engine.

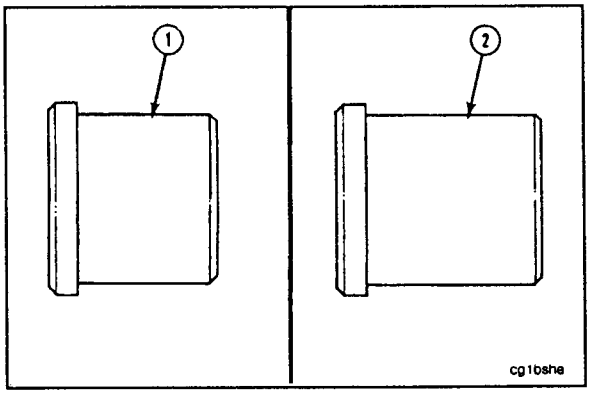

1. Use Part No. 3375861 Bushing Driver (1) to install bushings No. 1, No. 2, No. 4, and No. 6.
2. Use Part No. 3376412 Bushing Driver (2) to install bushings No. 3 and No. 5.

NOTE: Install the No. 6 through the No. 2 bushings in the same manner as No. 7 was installed.

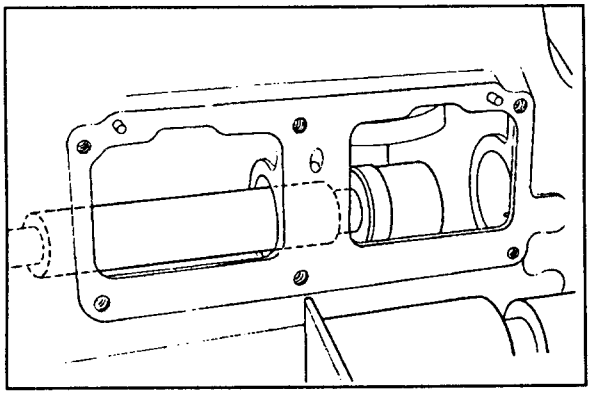

3. Install the tool assembly through the camshaft bore until the driver is in the cavity between the bores where the bushing is to be installed.
4. Install the bushing guide in the camshaft bore next to the bore where the bushing is to be installed.

5. Install the bushing marked for that location on the driver with the locating notch to the rear of the engine and at the 9:00 o'clock position.
6. Push the bushing in the bore until the oil holes in the bushing are aligned with the drillings in the bore.

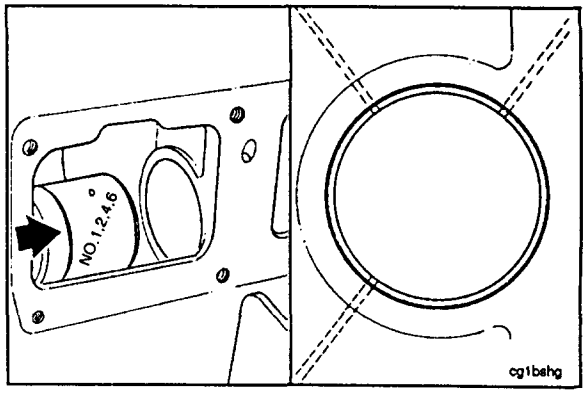

7. Use a 2.39 mm [0.094-inch] diameter rod to check the position and the location of the oil hole in the bushing and the cylinder block.
8. The rod **must** pass through the oil holes in the bushing and into the oil supply drillings in the cylinder block.

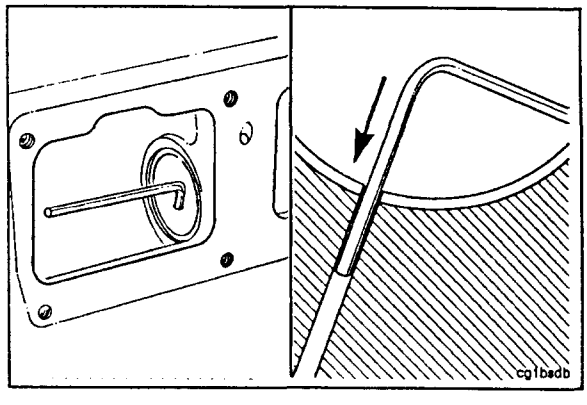

Install No. 1 Bushing

NOTE: ST-1228-6 Camshaft Bushing Guide is **not** used to install the No. 1 bushing.

1. Install a new bushing on Part No. 3375861 Driver with the notch to the rear of the engine and at the 9:00 o'clock position when looking at it from the front of the engine.
2. Push the bushing in the bore until the oil holes in the bushing are aligned with the drillings in the bore.

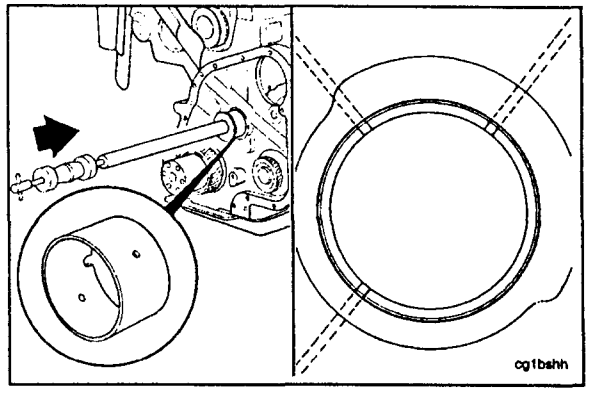

3. Use a 2.39 mm [0.094-inch] diameter rod to check the position and the location of the oil holes in the bushing and the cylinder block.
4. The rod **must** pass through the oil holes in the bushing and into the oil supply drillings in the cylinder block.

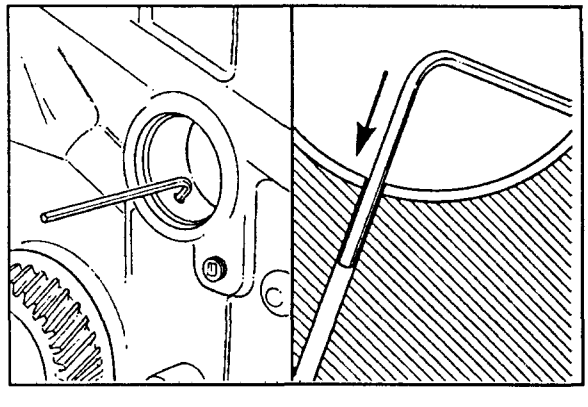

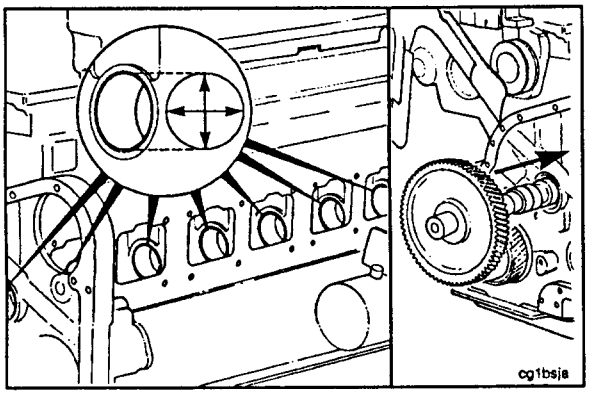

5. Measure the camshaft bushing installed inside diameter.

Camshaft Bushing Installed I.D.		
mm		in
63.457	MIN	2.4983
63.558	MAX	2.5023

6. Install the camshaft. Refer to Procedure 7-36.

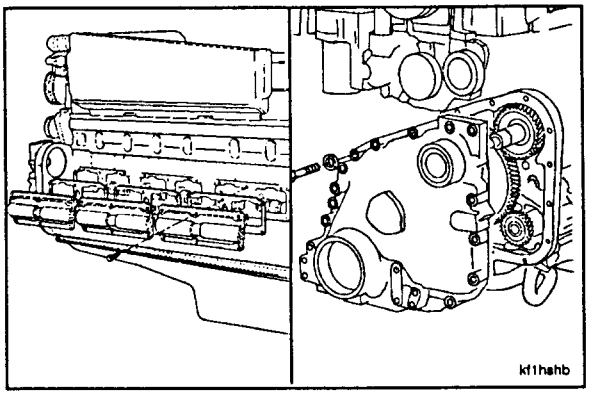

7. Install the cam followers. Refer to Procedure 7-13.
8. Install the gear cover. Refer to Procedure 7-34.

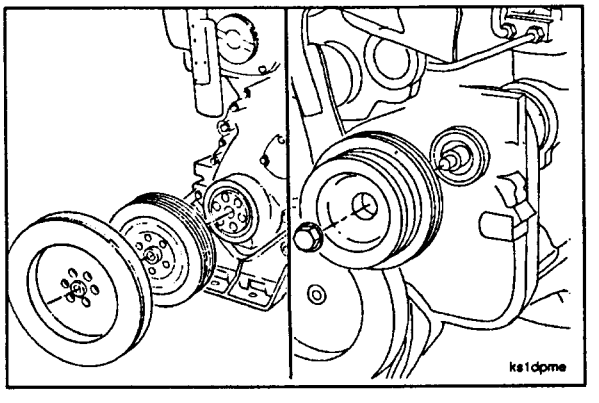

9. Install the crankshaft pulley and the vibration damper. Refer to Procedure 7-30.
10. Install the accessory drive pulley. Refer to Procedure 7-25.

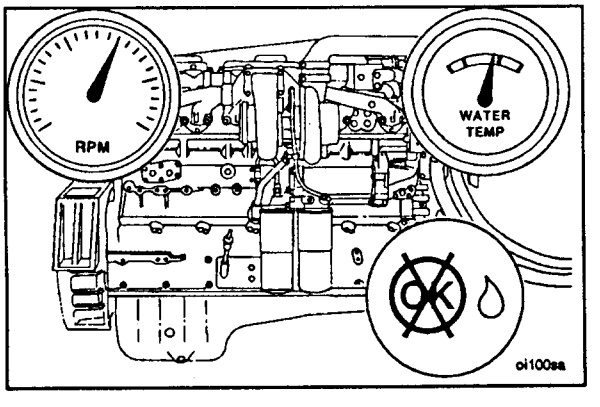

11. Operate the engine until it reaches a temperature of 80°C [180°F], and check for coolant or lubricating oil leaks.

Flywheel - Replace (7-39)

Remove

1. Remove the vehicle driveline and the transmission. Refer to the manufacturer's instructions.
2. Remove the clutch discs and the pressure plate.

NOTE: Hold the flywheel to prevent rotation.

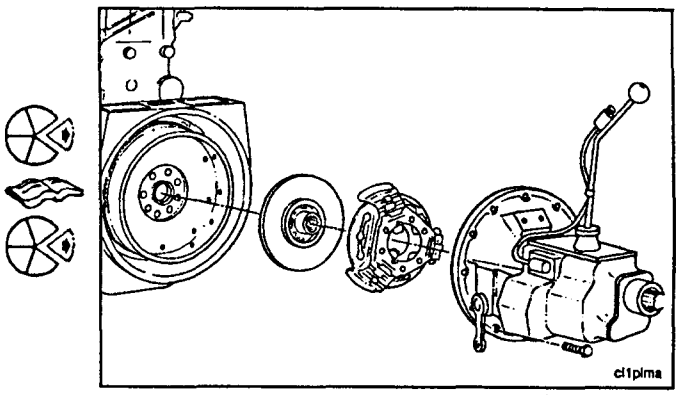

3. Install two 1/2 - 13 x 1 1/2 puller capscrews which have a minimum of 1 1/4-inch threaded area at points (1) and (2).
4. Remove capscrews (3) and (4), and install two 5/8 - 18 x 6-inch guide studs.

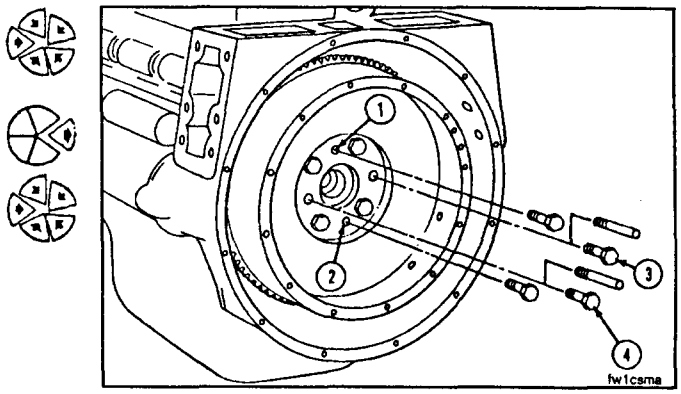

5. Determine the capscrew thread size, and install two "T-handles" in the flywheel at points (4) and (5).
6. Remove the remaining four flywheel mounting capscrews.

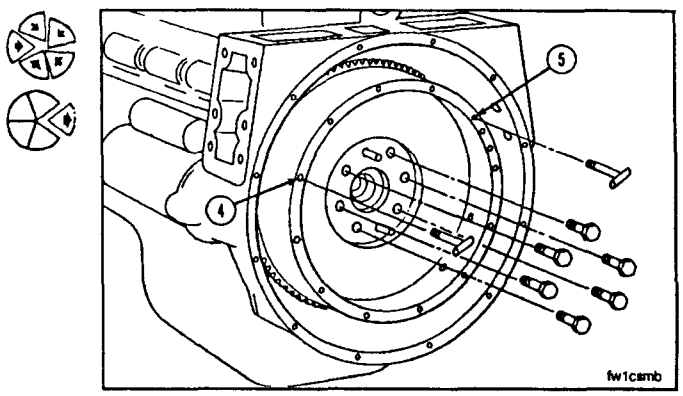

Warning: Because this part weighs more than 23 kg [50 lbs], two people or a hoist will be required to lift the flywheel to avoid personal injury.

7. Tighten capscrews (1) and (2) in alternating sequence to loosen the flywheel.

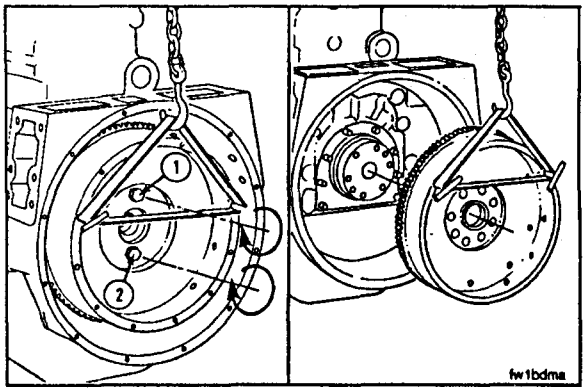

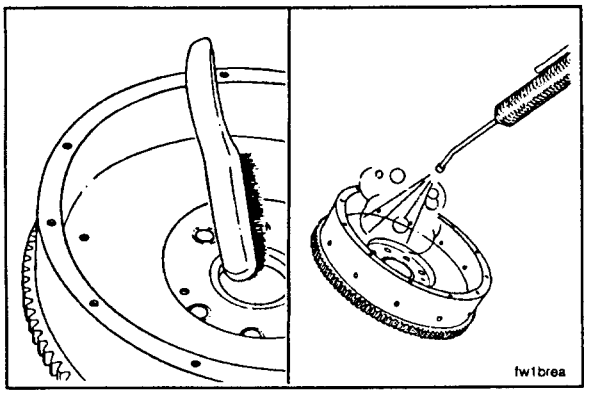

Clean and Inspect

1. Use a wire brush to clean the crankshaft pilot bore.
2. Steam clean or use a solvent, and dry with compressed air.

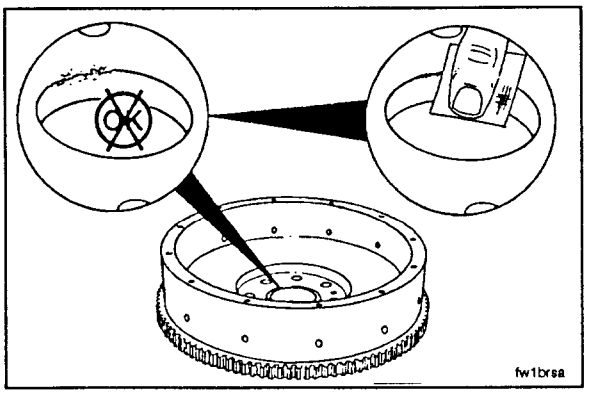

3. Visually inspect for nicks or burrs.
4. Use a fine crocus cloth to remove small nicks and burrs.

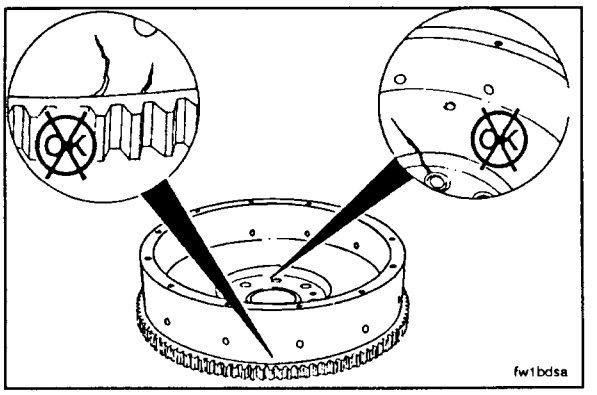

Warning: Do not use a cracked or resurfaced flywheel. These can break, causing serious personal injury or property damage.

5. Use Part No. 3375432 Crack Detection Kit to check for cracks in the flywheel. Follow the instructions provided with the kit.

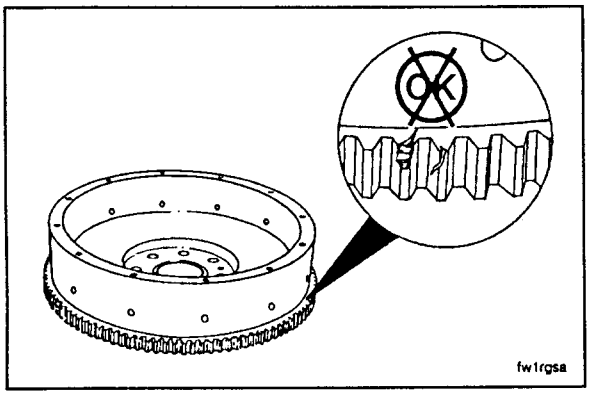

6. Inspect the flywheel ring gear teeth for cracks and chips.

NOTE: If the ring gear teeth are cracked or broken, the ring gear **must** be replaced.

Ring Gear - Replace

Caution: Do not use a cutting torch to heat the ring gear. The flywheel can be damaged.

1. Heat the outside diameter of the ring gear with a heating torch.
2. Use a blunt chisel and a hammer to remove the gear from the flywheel.

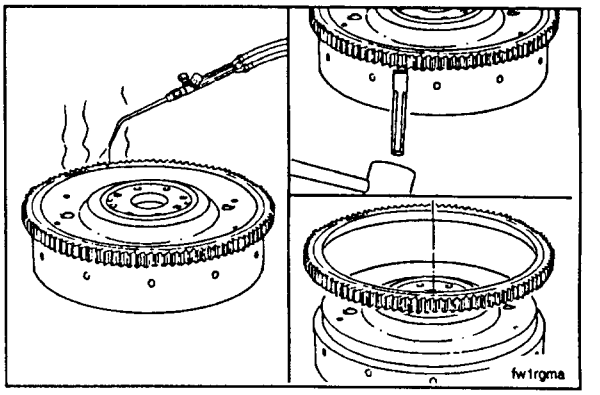

3. Heat the new ring gear in an oven heated to 316°C [600°F] for a minimum of 1 hour.

NOTE: Do **not** overheat the ring gear. The metal hardness will be changed.

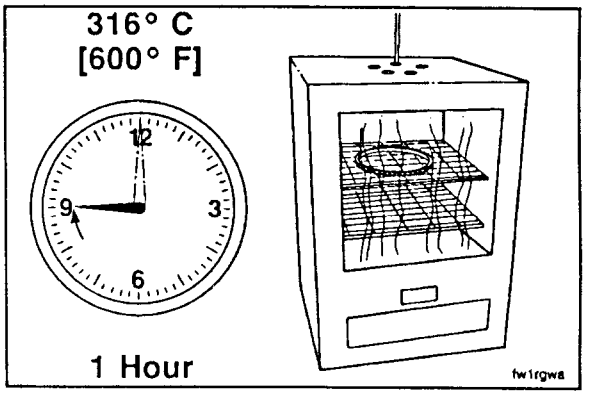

Caution: Wear protective gloves when handling parts that have been heated to prevent personal injury.

4. Remove the gear from the oven, and install it on the flywheel before it cools.

NOTE: If an oven is **not** available, use a heating torch to heat the inside diameter of the new ring gear to 316°C [600°F]. Use a Tempilstik® crayon or its equivalent to check the gear temperature before installing it on the flywheel.

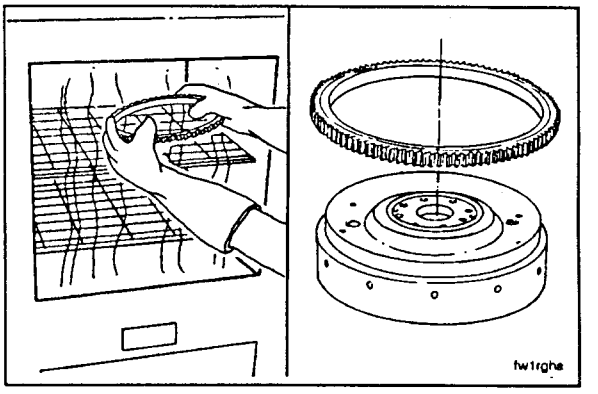

Install

NOTE: Use a new pilot bearing when installing a new or rebuilt clutch.

1. Use a mandrel and a hammer to remove the pilot bearing.
2. Use a 240 grit emery cloth to clean the pilot bore.

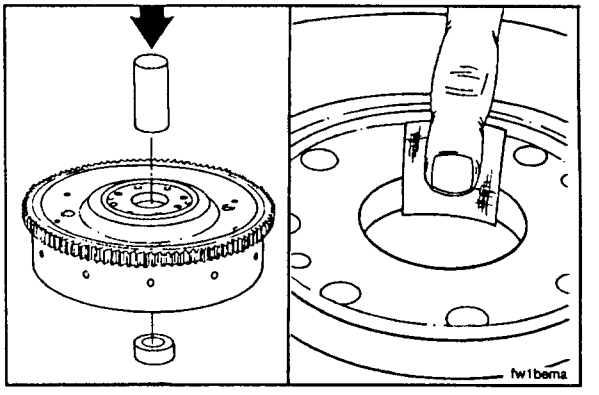

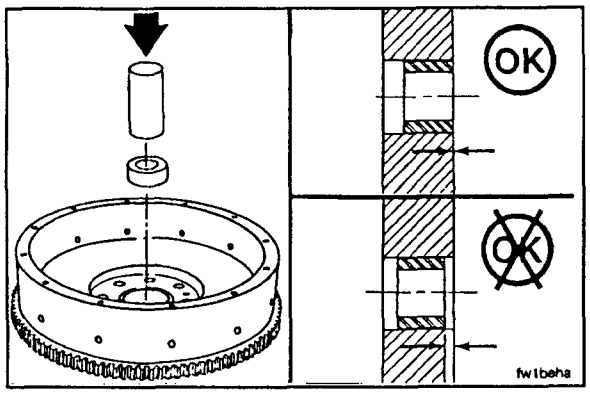

3. Use a mandrel and a hammer to install the pilot bearing.

NOTE: The pilot bearing **must** be installed flush with the pilot bore surface.

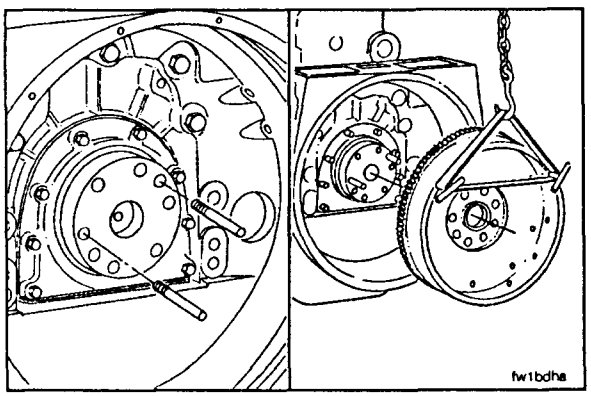

4. Install two 5/8 - 18 x 6-inch guide studs in the crankshaft flange.

Warning: Because this part weighs more than 23 kg [50 lbs], two people or a hoist will be required to lift the part to avoid personal injury.

5. Install the flywheel on the guide stud.

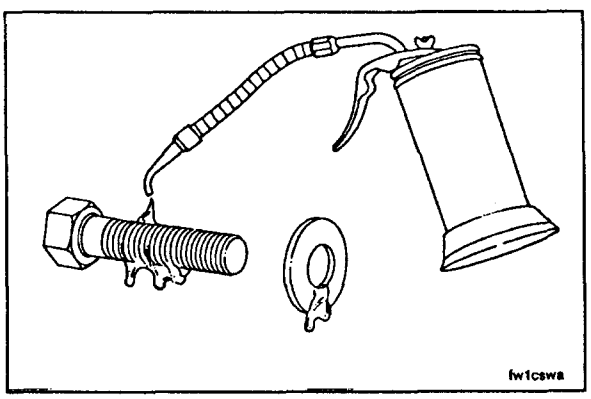

6. Lubricate the threads of the capscrews and the surface of the washers with 15W-40 lubricating oil.

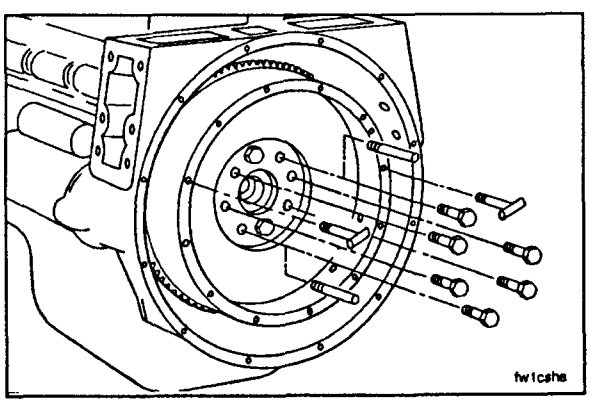

7. Install the four capscrews.
8. Remove the "T-handles" and the guide studs.
9. Install the remaining two capscrews in the holes from which the guide studs were removed.
10. Tighten the capscrews in a star pattern to 270 N•m [200 ft-lbs] torque.

Inspect The Flywheel Bore Runout

Use Part No. 3376050 Dial Indicator Gauge (1) or its equivalent and Part No. ST-1325 Dial Gauge Attachment (2) to inspect the flywheel bore (3) and the surface (4) runout.

1. Install the attachment to the flywheel housing.
2. Install the gauge on the attachment.
3. Install the contact tip of the indicator against the inside diameter of the flywheel bore, and set the dial indicator at "0" (zero).

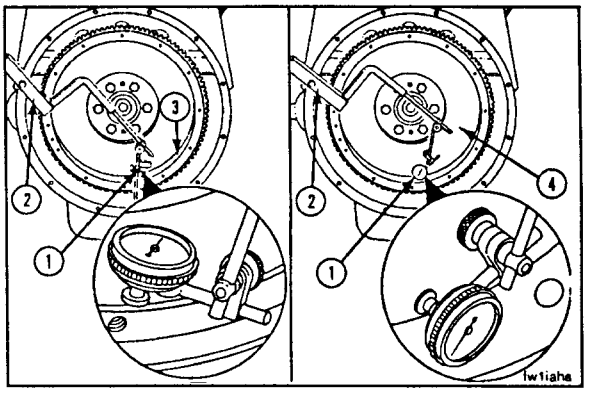

4. Use the accessory drive shaft to rotate the crankshaft one complete revolution.

NOTE: The total indicator reading (TIR) **must not** exceed 0.127 mm [0.0050-inch].

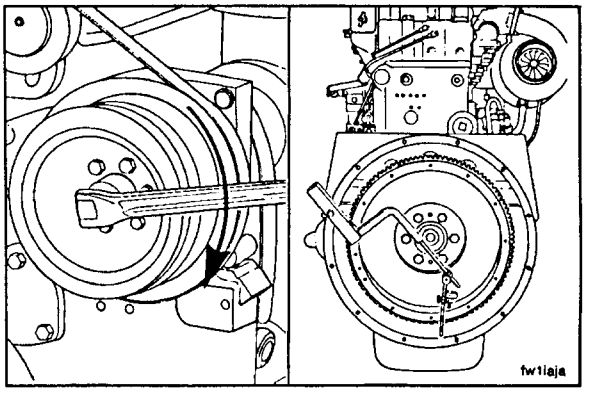

NOTE: If the TIR is greater than the specification, do the following:

a. Remove the flywheel.

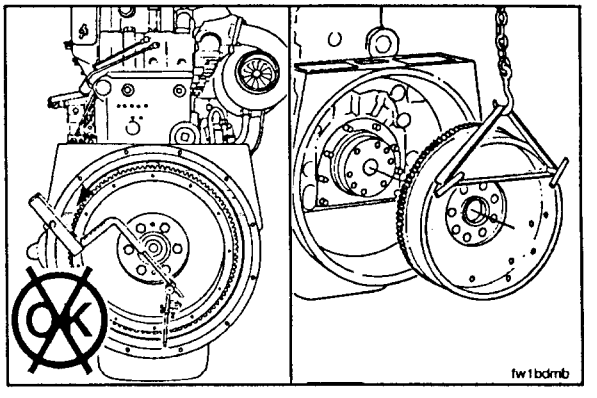

b. Inspect the flywheel mounting surface for dirt or damage.

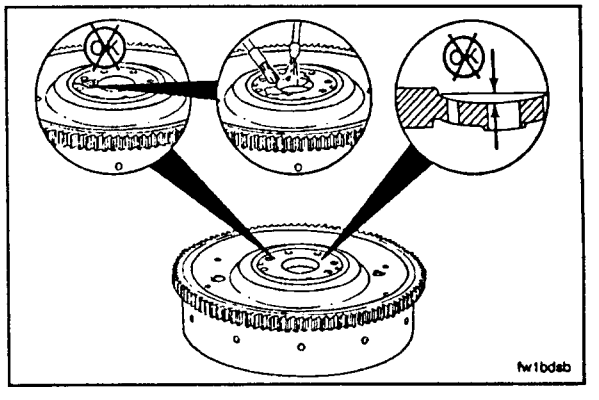

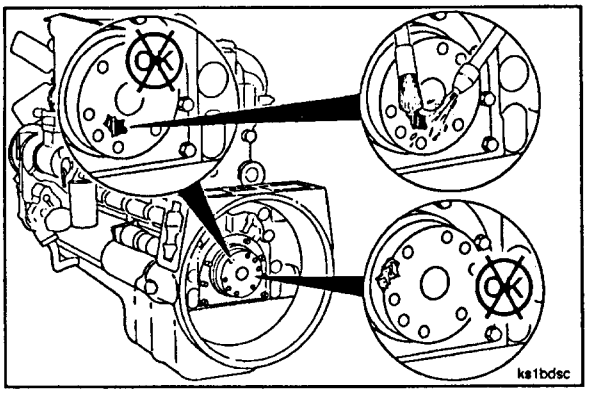

c. Inspect the crankshaft for dirt or damage.

NOTE: Refer to the "NT Engine Shop Manual" to replace the crankshaft.

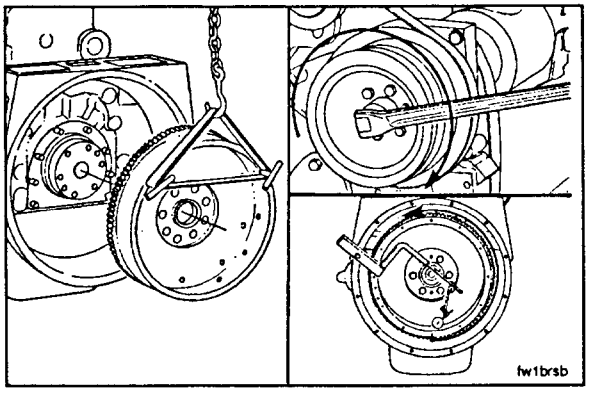

d. Install the flywheel, and inspect the bore runout again.

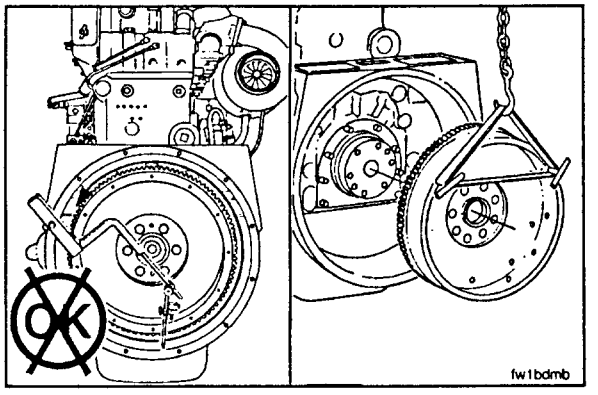

e. Replace the flywheel if the runout does **not** meet specifications.

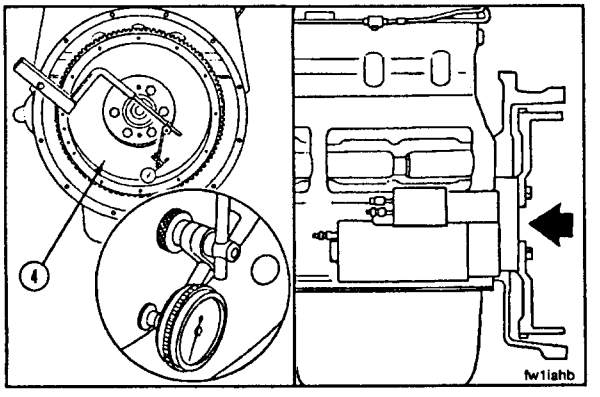

Inspect The Flywheel Face Runout

1. Install the contact tip of the indicator against the flywheel face, as close to the outside diameter as possible, to inspect the face (4) runout.
2. Push the flywheel forward to remove the crankshaft end clearance. Adjust the dial on the indicator until the needle points to "0" (zero).

3. Use the accessory drive shaft to rotate the crankshaft one complete revolution. Measure the flywheel runout at four equal points on the flywheel.

NOTE: The flywheel **must** be pushed toward the front of the engine to remove the crankshaft end clearance each time a point is measured.

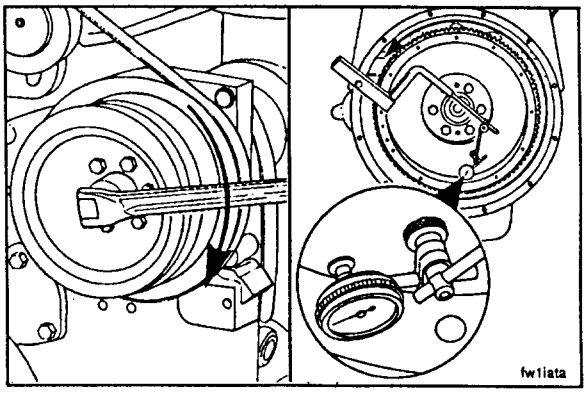

4. The total indicator reading (TIR) **must not** exceed the following specifications:

Flywheel Radius (A)		Maximum (TIR) of Flywheel Face	
mm	in	mm	in
203	8	0.203	0.008
254	10	0.254	0.010
305	12	0.305	0.012
356	14	0.356	0.014
406	16	0.406	0.016

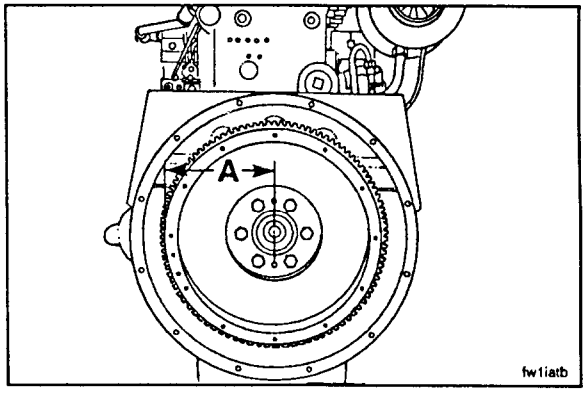

5. If the flywheel face runout is **not** within specifications, remove the flywheel. Check for nicks, burrs, or foreign material between the flywheel mounting surface and the crankshaft flange.

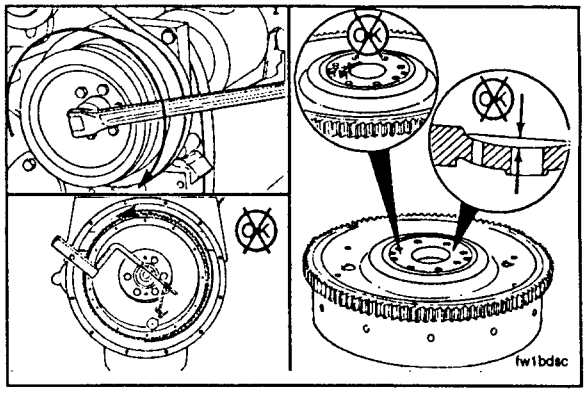

6. Install the clutch discs, the pressure plate, the transmission and the drive line (if equipped) in reverse order of removal. Refer to the manufacturer's instructions.

NOTE: Align the universal joints on each end of the drive shaft to prevent vibration.

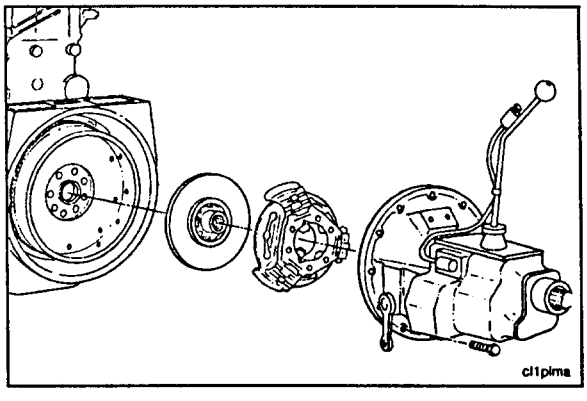

Seal, Rear Crankshaft - Replace (7-40)

Remove

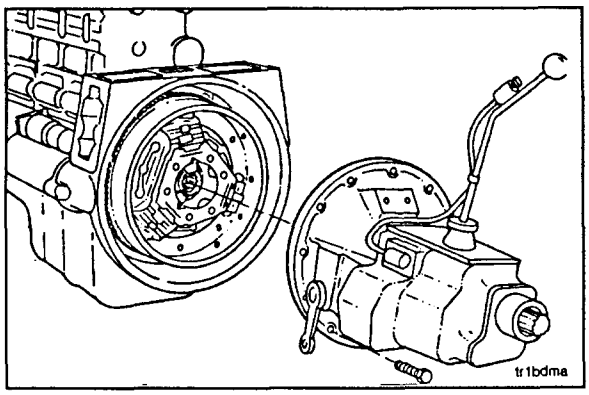

NOTE: On wet housing applications, the flywheel housing must be removed to replace the rear crankshaft seal. Refer to Procedure 7-41.

1. Disconnect the driveline, and remove the transmission (if equipped). Refer to the manufacturer's instructions.

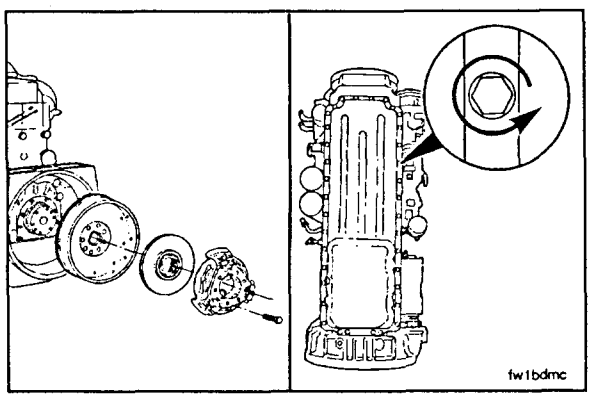

2. Remove the clutch and the flywheel (if equipped). Refer to Procedure 7-39.
3. Loosen the oil pan mounting capscrews four to five turns.

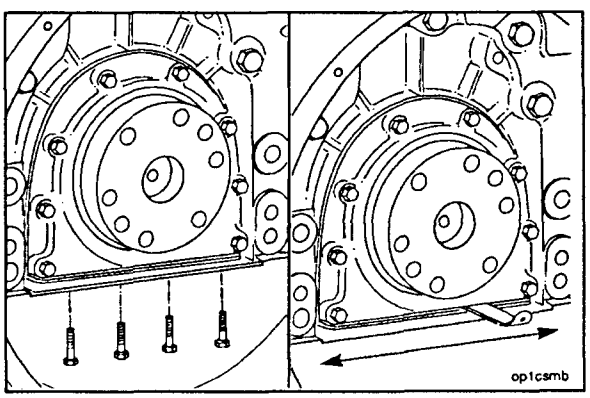

4. Remove the four oil pan mounting capscrews which secure the oil pan to the rear cover.

Caution: Use extreme care when releasing the oil pan gasket from the rear cover to prevent damage to the gasket. If the gasket is damaged, the oil pan must be removed and the gasket replaced. Refer to Procedure 2-16.

5. Insert a feeler gauge or a shim stock between the rear cover and the oil pan gasket. Move the feeler gauge or the shim stock back and forth to release the gasket from the rear cover.

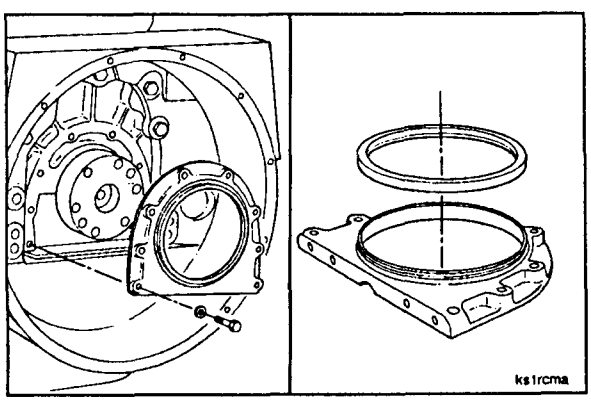

6. Remove the capscrews from the rear cover, and remove the cover from the crankshaft flange.
7. Remove the seal from the rear cover.

Clean and Inspect

1. Clean the gasket surface of the cylinder block and the rear cover.
2. Inspect the rear cover for cracks or other damage.

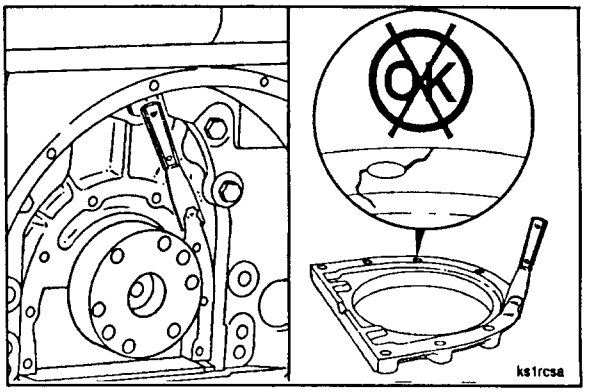

3. Use a crocus cloth to remove any rust or other deposits from the crankshaft flange.
4. Use a clean cloth to clean the crankshaft flange.

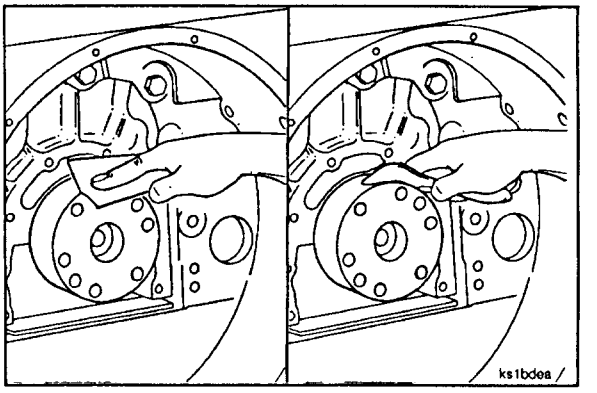

Install

1. Install a new gasket on the cylinder block.
2. Install the rear cover and the eight capscrews and washers. Tighten the capscrews just enough to hold the rear cover in position.

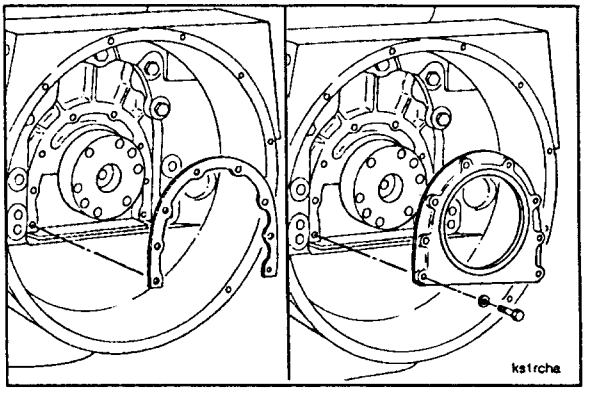

3. Remove the pins from ST-997 Crankshaft Oil Seal Driver, and use the driver to align the rear cover with the crankshaft.
4. Install the seal driver on the crankshaft flange and in the bore of the rear cover.

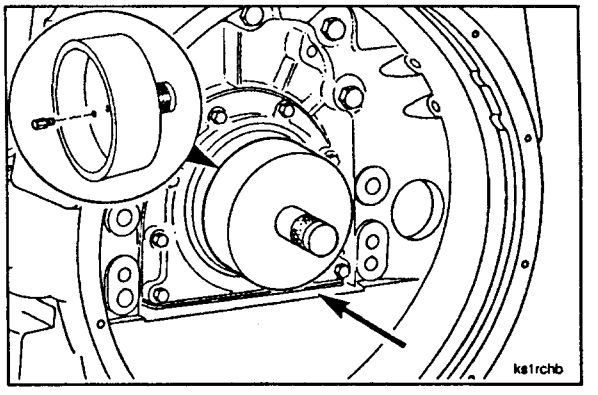

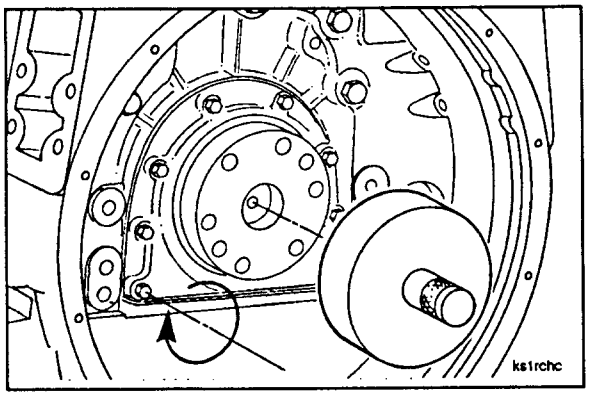

5. Tighten the rear cover mounting capscrews to 45 N•m [35 ft-lbs] torque, and remove the crankshaft oil seal driver, Part No. ST-997.
6. Use a feeler gauge to make sure the rear cover is within 0.10 mm [0.004-inch] of being parallel with the oil pan flange of the cylinder block.

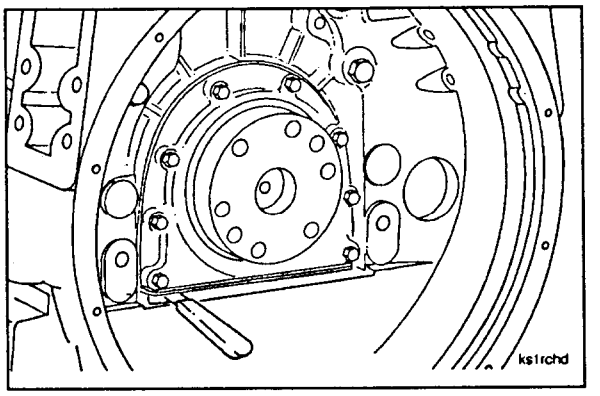

7. Trim the excess gasket material from the ends of the rear cover gasket so the gasket is even or does not extend more than 0.25 mm [0.010-inch] beyond the pan flange.

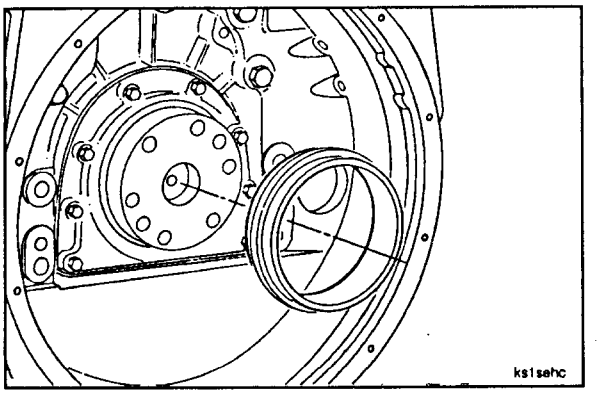

8. Use the installation sleeve provided with the seal to install the seal on the crankshaft.

NOTE: Do not use any kind of lubricant to install the seal. The oil seal must be installed with the lip of the seal and the crankshaft clean and dry.

9. Push the oil seal over the installation sleeve onto the crankshaft, and remove the sleeve.

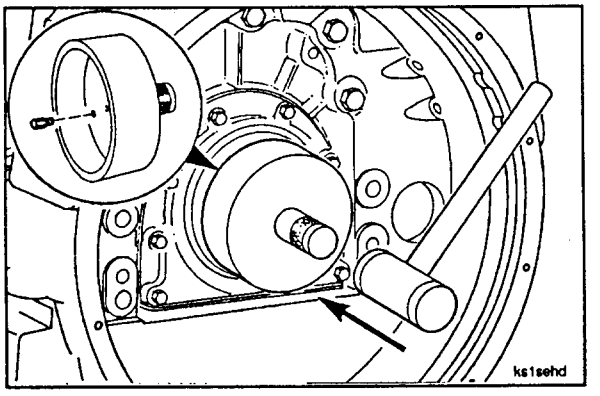

10. Install the pins in ST-997 Crankshaft Oil Seal Driver.
11. Use ST-997 Crankshaft Oil Seal Driver to install the oil seal in the rear cover.

12. Install the four capscrews which hold the oil pan to the rear cover.

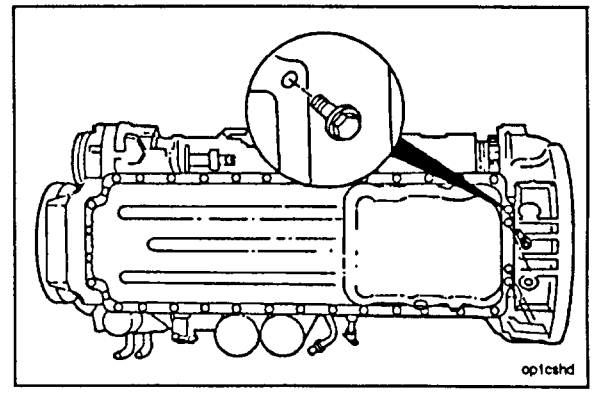

13. Tighten one of the 7/16-inch oil pan mounting capscrews on each side of the oil pan, halfway between the front and the rear of the oil pan, to 20 N•m [15 ft-lbs] torque.

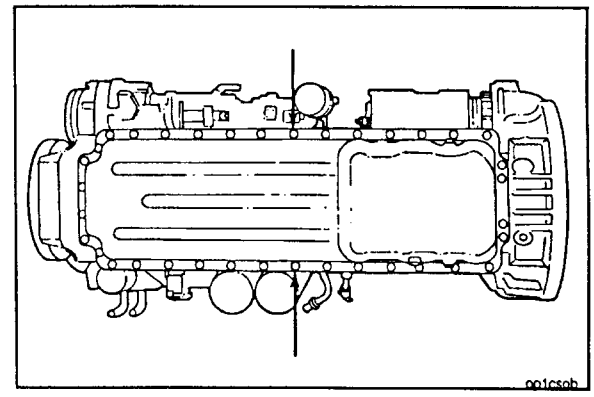

14. Tighten the four 5/16-inch capscrews in the rear of the oil pan to 25 N•m [20 ft-lbs] torque in the sequence shown.
15. Tighten the thirty-two (32) 7/16-inch capscrews to 70 N•m [50 ft-lbs] torque in the sequence shown.

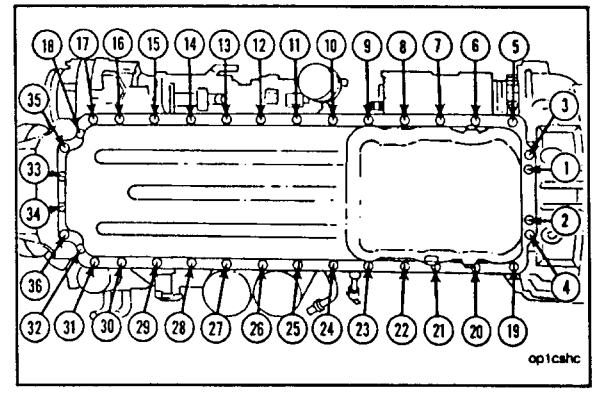

16. Install the flywheel and the clutch (if equipped). Refer to Procedure 7-39.
17. Install the transmission and the driveline. Refer to the manufacturer's instructions.

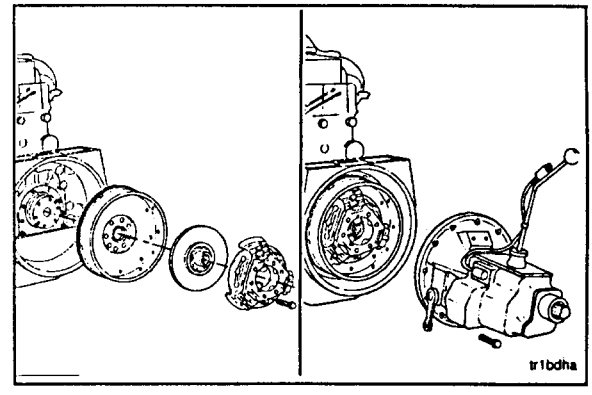

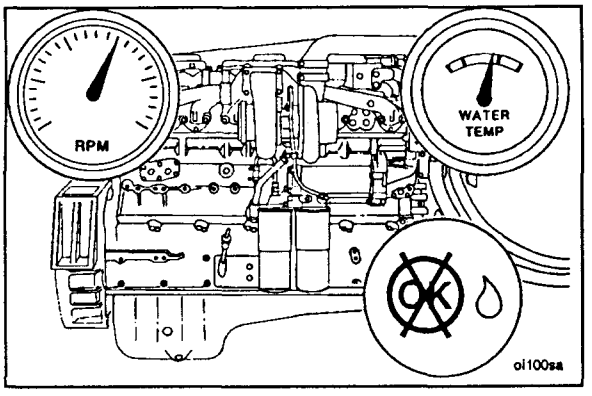

18. Operate the engine until it reaches a temperature of 80°C [180°F], and check for leaks.

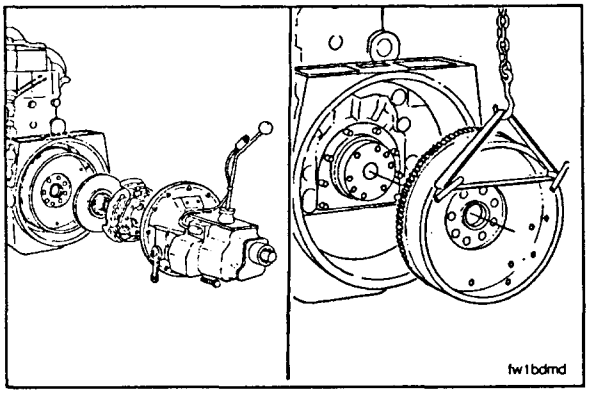

Flywheel Housing - Replace (7-41)

Remove

1. Remove the transmission, the clutch, and all related components. Refer to the manufacturer's instructions.
2. Remove the flywheel. Refer to Procedure 7-39.

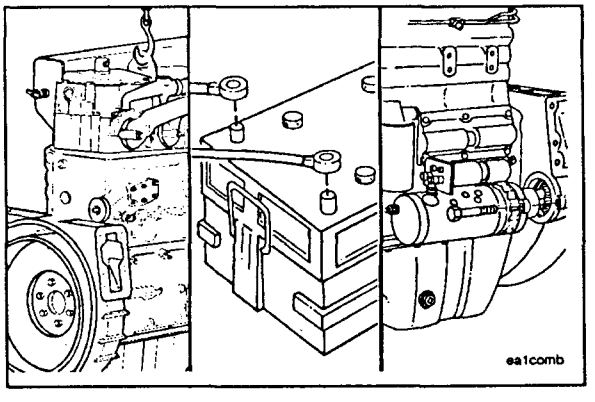

3. Use a suitable lifting fixture to support the rear of the engine.
4. Disconnect the battery cables.
5. Remove the starting motor. Refer to Procedure 6-10.

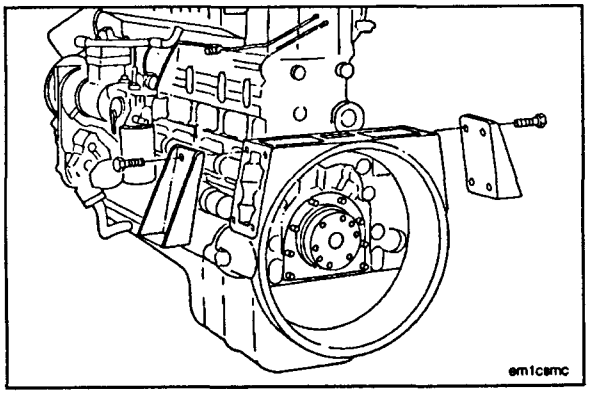

6. Remove the capscrews and both rear engine mounts.

7. Remove capscrews (1) and (2), and install two 5/8 - 18 x 4-inch guide studs.

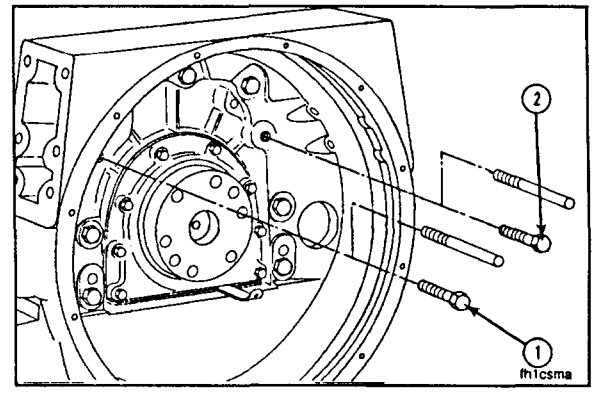

8. Remove the remaining capscrews.
9. Use a rubber hammer to loosen the housing from the dowels in the cylinder block.

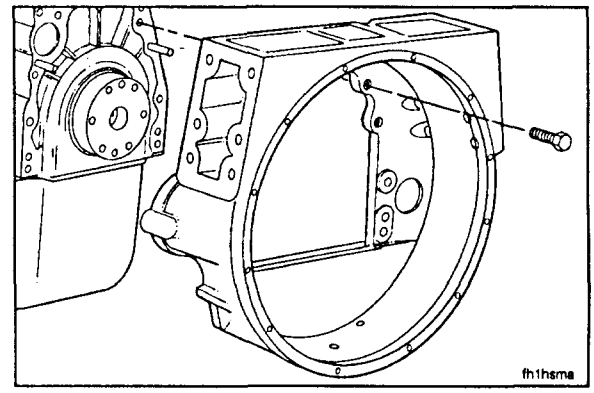

10. On wet-type flywheel housings, remove the O-ring from the rear cover and the 11 rectangular sealing rings from the flywheel housing.

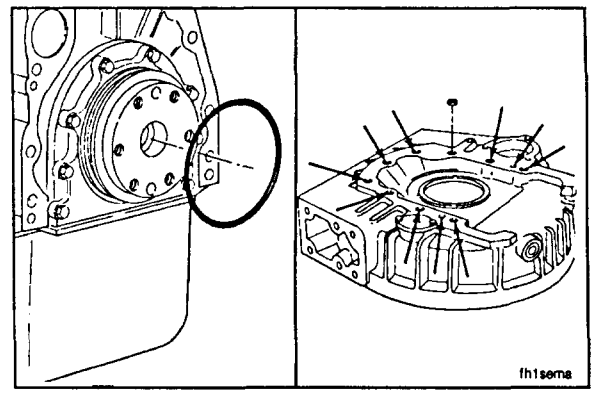

Clean and Inspect

1. Steam clean or use solvent to clean the housing.
2. Dry with compressed air.

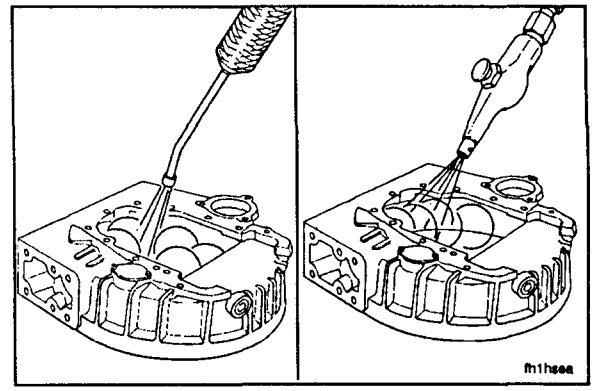

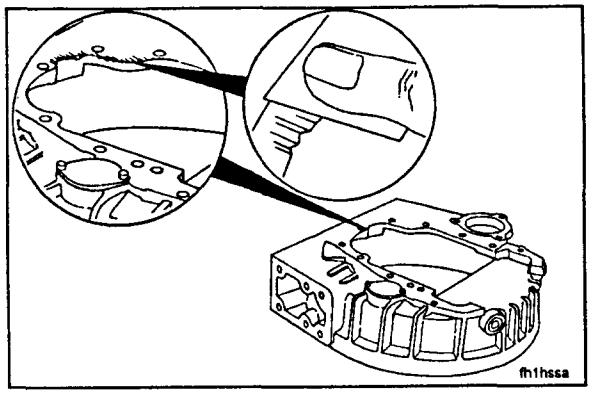

3. Visually inspect all surfaces for nicks, burrs, or cracks.
4. Use a fine crocus cloth to remove small nicks and burrs.

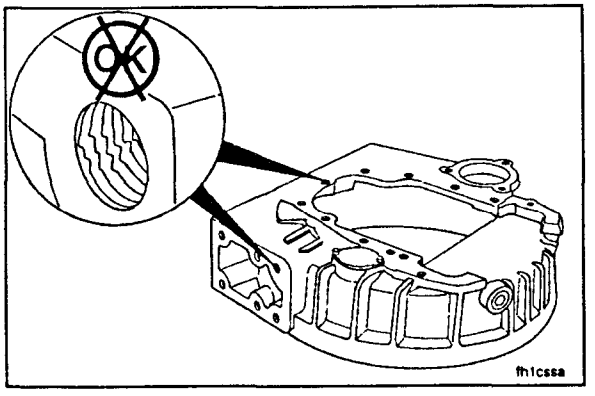

5. Inspect all threaded capscrew holes for damage.
6. Repair or replace the housing if the capscrew holes are damaged.

Install

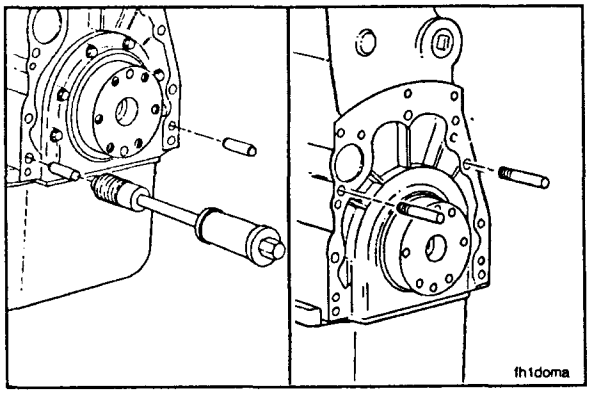

Caution: If a new flywheel housing is being installed, the dowels must be removed from the cylinder block prior to installing the housing to prevent damage to the housing. The housing must be doweled with an oversize dowel after it has been aligned. Refer to Procedure 7-42.

1. Install two 5/8 - 18 x 4-inch guide studs in the cylinder block to help support and align the housing during installation.

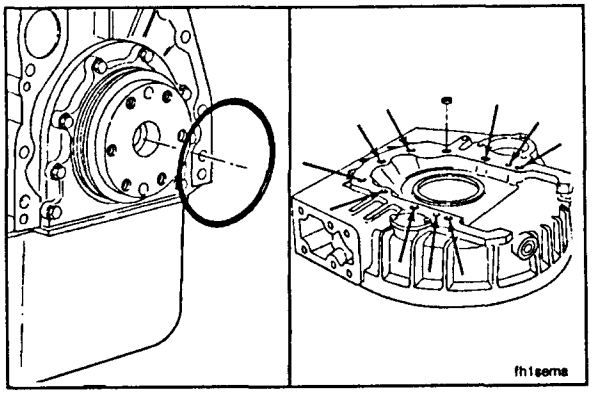

2. If a wet-type flywheel housing is being installed, do the following:
   - Install a new O-ring on the rear cover. Use 15W-40 oil to lubricate the O-ring.
   - Install 11 rectangular sealing rings in the capscrew and dowel pin counterbores in the flywheel housing. Use gasket adhesive to fasten the sealing rings to the housing.

3. Install the flywheel housing over the guide studs.
4. Install the capscrews, and tighten to 205 N•m [150 ft-lbs] torque in the sequence shown.

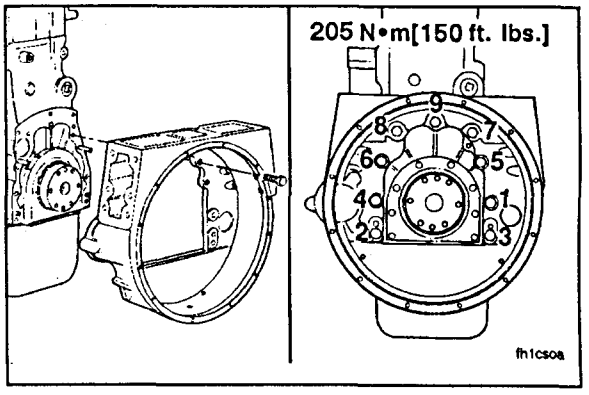

Measure The Flywheel Housing Alignment

Caution: The flywheel housing bore and the surface must be in alignment with the crankshaft to prevent possible damage to the engine, the clutch, or the transmission.

1. Use chalk to mark the housing at the 12:00 o'clock, 3:00 o'clock, 6:00 o'clock, and 9 o'clock positions.
2. Use Part No. 3376050 Dial Gauge Indicator (1) and Part No. ST-1325 Dial Gauge Attachment (2) to measure the bore alignment.
3. Use the accessory drive shaft to rotate the crankshaft.

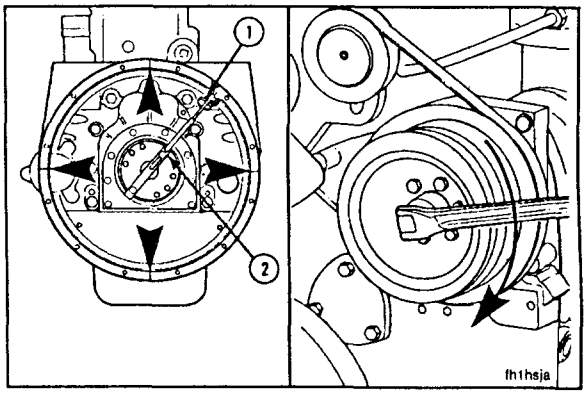

Bore Alignment - Check

1. Attach a dial indicator to the crankshaft as shown.

NOTE: The indicator arm **must** be rigid for an accurate reading. It **must not** sag.

2. Put the indicator at the 12:00 o'clock position. Adjust the dial indicator until the needle points to "0" (zero).

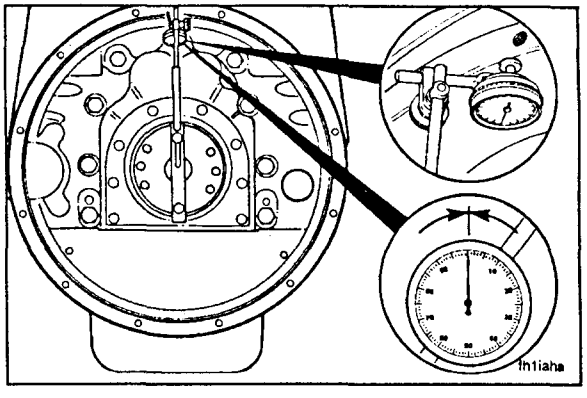

3. Use the accessory drive to rotate the crankshaft in a **clockwise** direction.
4. Record the indicator reading at three different points: 3:00 o'clock, 6:00 o'clock, and 9:00 o'clock.

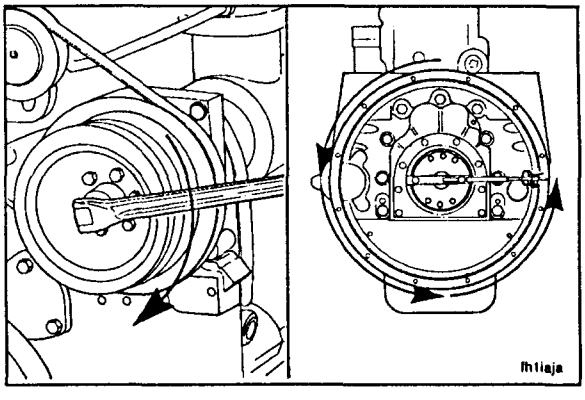

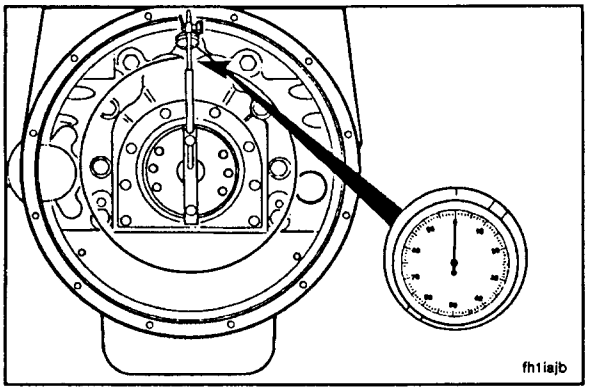

5. Continue rotating the crankshaft until the dial indicator is at the 12:00 o'clock position.
6. Check the dial indicator to make sure the needle still points to "0" (zero).

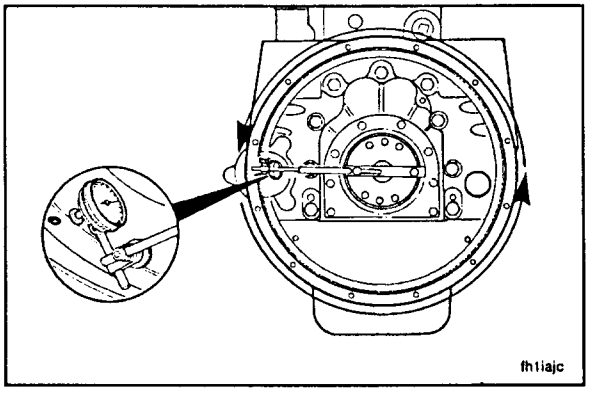

7. Determine the total indicator run out (TIR) as follows:

	mm	in
Example:		
12 o'clock	0.00	0.00
3 o'clock	+ 0.08	+ 0.003
6 o'clock	- 0.05	- 0.002
9 o'clock	+ 0.08	+ 0.003
Equals TIR	0.13	0.005

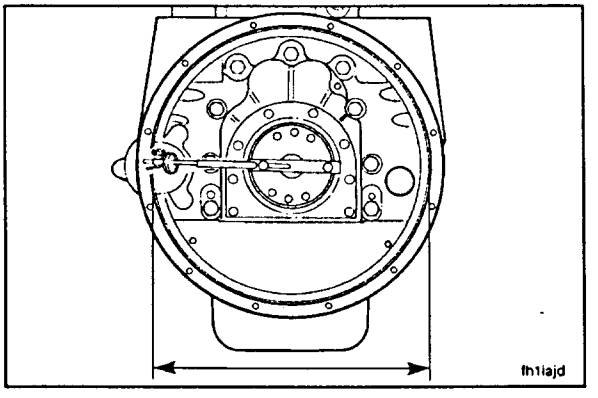

8. The maximum allowable total indicator reading (TIR) depends on the diameter of the housing bore. See the following chart:

SAE	Bore Diameter		Bore Location Tolerance	
No.	mm	in	mm	in
00	787.40 to 787.65	31.000 to 31.010	0.30	0.012 TIR
0	647.70 to 647.95	25.500 to 25.510	0.25	0.010 TIR
1/2	584.00 to 584.20	23.000 to 23.008	0.25	0.010 TIR
1	534.27 to 534.40	20.125 to 20.130	0.20	0.008 TIR
2	447.68 to 447.80	17.625 to 17.630	0.20	0.008 TIR
3	409.58 to 409.70	16.125 to 16.130	0.20	0.008 TIR

9. If the bore alignment does **not** meet the specifications, loosen the housing capscrews. Tighten the capscrews again, and measure the bore alignment again.

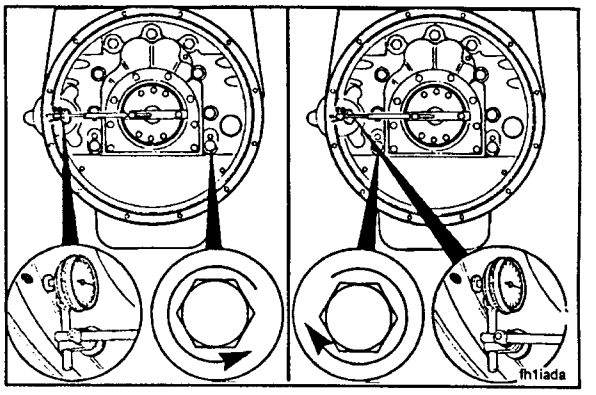

10. If the alignment is **not** within specifications and the bore is round, the housing can be shifted. Refer to Procedure 7-42.
11. If the alignment is **not** within specifications and the bore is **not** round, the housing **must** be replaced.

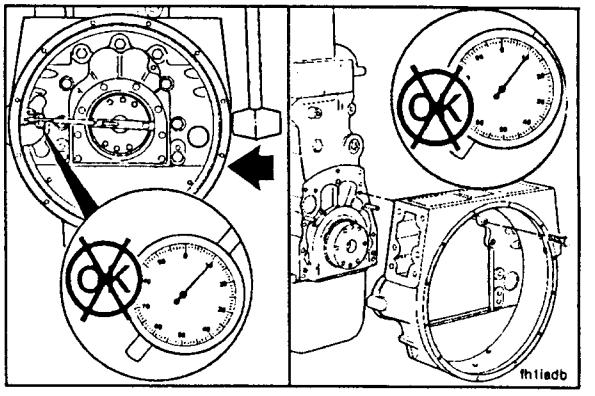

Face Alignment - Check

1. Install the dial indicator as shown.

Caution: The tip of the gauge must not enter the capscrew holes or the gauge will be damaged.

2. Put the tip of the dial indicator gauge against the flywheel housing surface.

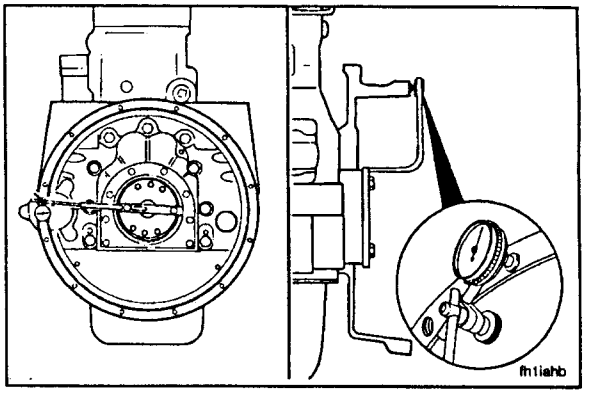

3. Use the accessory drive to rotate the crankshaft until the dial indicator is at the 12:00 o'clock position.
4. Push the crankshaft toward the front of the engine. Adjust the dial on the indicator until the needle points to "0" (zero).

NOTE: The crankshaft **must** be pushed toward the front of the engine to remove the crankshaft end clearance each time a point is measured.

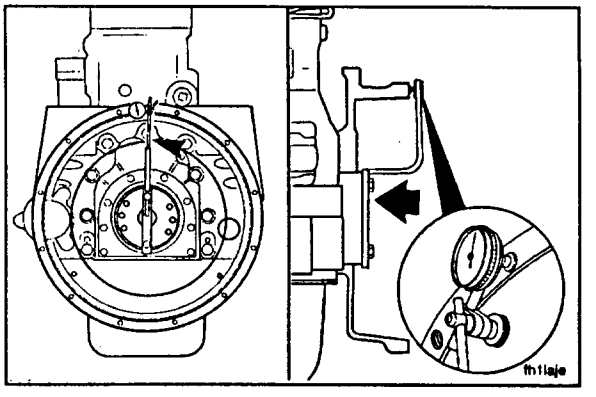

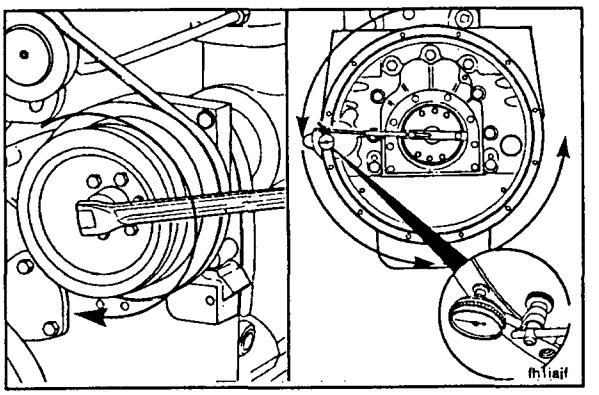

5. Use the accessory drive to rotate the crankshaft in the **clockwise** direction.
6. Record the indicator reading at three different points: 3:00 o'clock, 6:00 o'clock, and 9:00 o'clock.

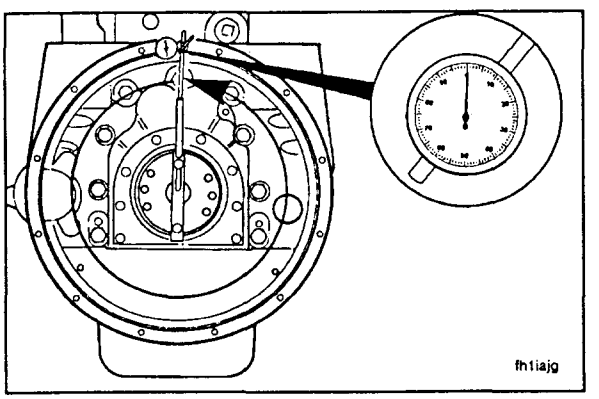

7. Continue rotating the crankshaft until the dial indicator is at the 12:00 o'clock position.
8. Check the dial indicator to make sure the needle still points to "0" (zero).

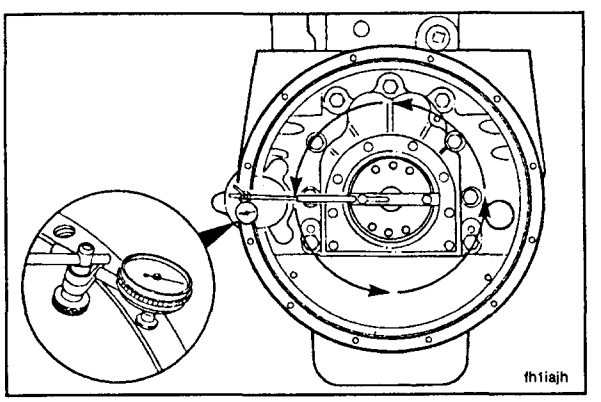

9. Determine the total indicator run out (TIR) as follows:

	mm	in
Example:		
12 o'clock	0.00	0.00
3 o'clock	+ 0.08	+ 0.003
6 o'clock	- 0.05	- 0.002
9 o'clock	+ 0.08	+ 0.003
Equals TIR	0.13	0.005

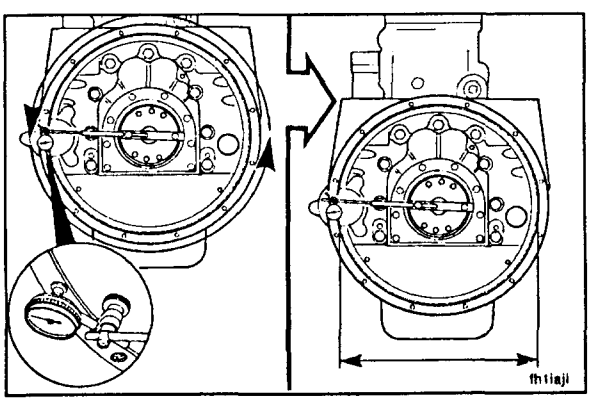

10. The maximum allowable total indicator reading (TIR) depends on the diameter of the housing bore. See the following chart:

SAE No.	Bore Diameter mm	Bore Diameter in	Bore Location Tolerance mm	Bore Location Tolerance in
00	787.40 to 787.65	31.000 to 31.010	0.30	0.012 TIR
0	647.70 to 647.95	25.500 to 25.510	0.25	0.010 TIR
1/2	584.00 to 584.20	23.000 to 23.008	0.25	0.010 TIR
1	534.27 to 534.40	20.125 to 20.130	0.20	0.008 TIR
2	447.68 to 447.80	17.625 to 17.630	0.20	0.008 TIR
3	409.58 to 409.70	16.125 to 16.130	0.20	0.008 TIR

11. If the alignment is **not** within specifications, remove the housing. Check for nicks, burrs, or foreign material between the block and the housing.

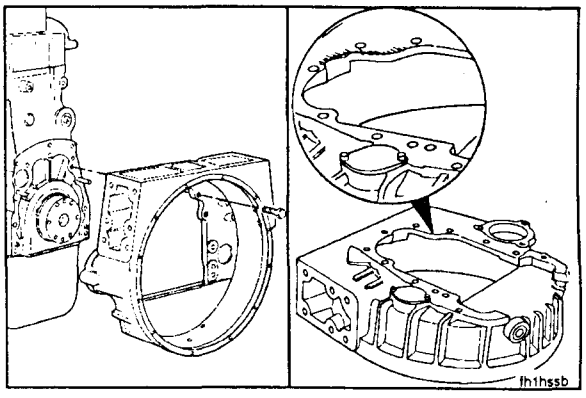

12. Check the alignment again. If the alignment is **not** within specifications, the block or the housing is **not** machined correctly.

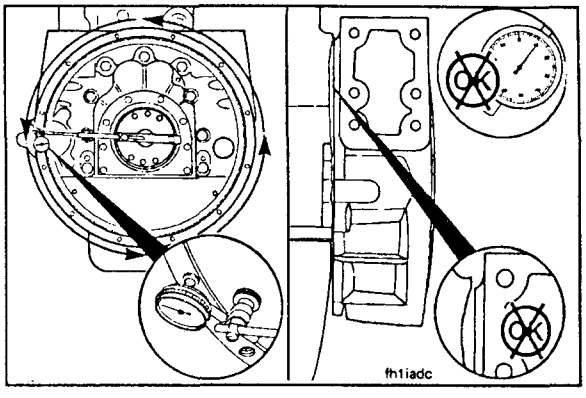

13. Install the two rear engine mounts. Tighten the capscrews to the manufacturer's specifications.

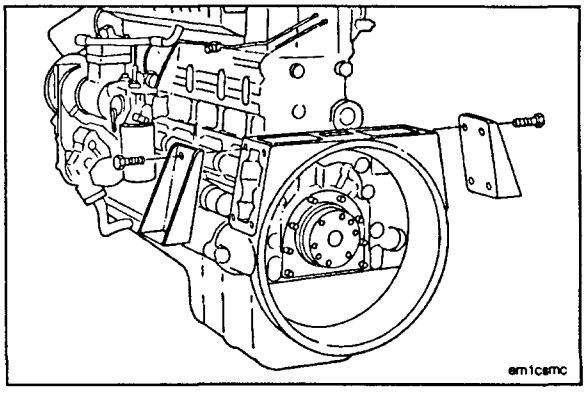

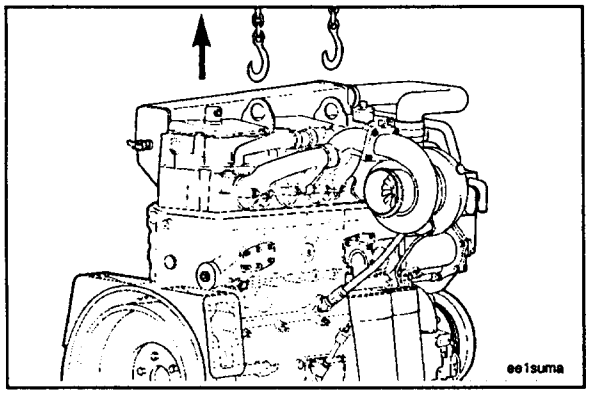

14. Remove the lifting fixture used to support the engine.

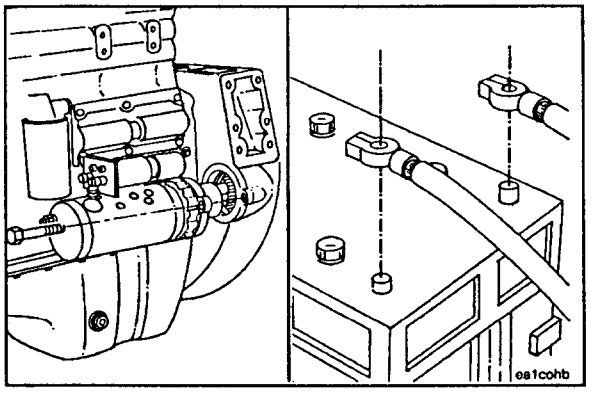

15. Install the starting motor. Refer to Procedure 6-10.
16. Connect the battery cables.

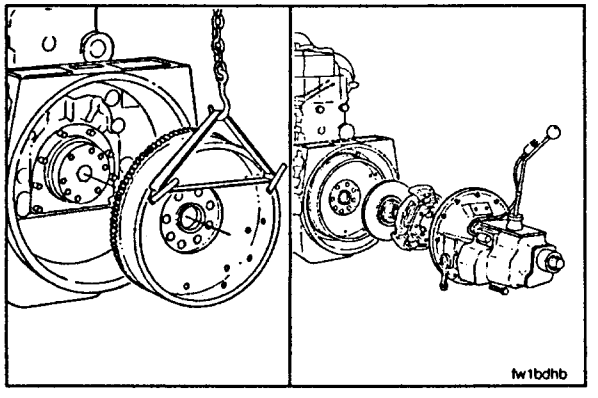

17. Install the flywheel. Refer to Procedure 7-39.
18. Install the clutch, the transmission, and related components. Refer to the manufacturer's instructions.

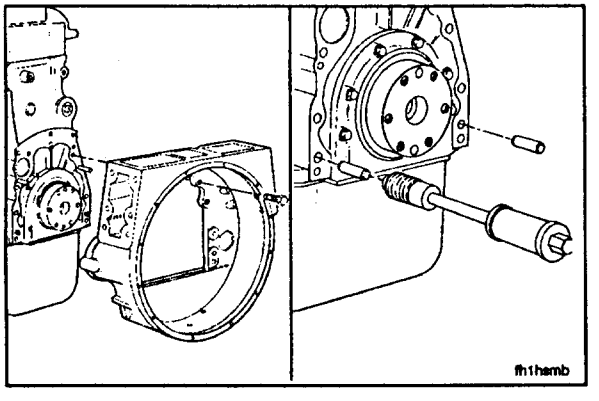

Flywheel Housing Redowel To Cylinder Block - (7-42)

1. Remove the flywheel housing. Refer to Procedure 7-41.
2. Use Part No. ST-1134 Dowel Pin Extractor or equivalent to remove the two dowel pins from the cylinder block.

3. Measure one of the dowel pins which was removed and replace it with the next oversize dowel.
4. Install the flywheel housing. Refer to Procedure 7-41. Tighten the capscrews to 7 N•m [5 ft-lbs] torque.

NOTE: Do **not** tighten the capscrews to the final torque value until the flywheel housing is aligned.

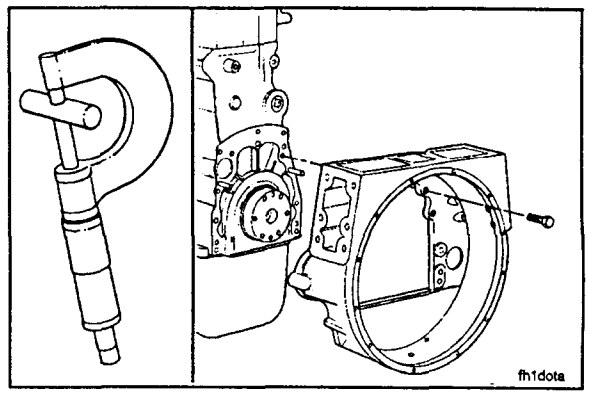

5. Use chalk to mark the housing at the 12:00 o'clock, 3:00 o'clock, 6:00 o'clock, and 9:00 o'clock positions.
6. Attach the dial indicator to the crankshaft. Refer to Procedure 7-41.

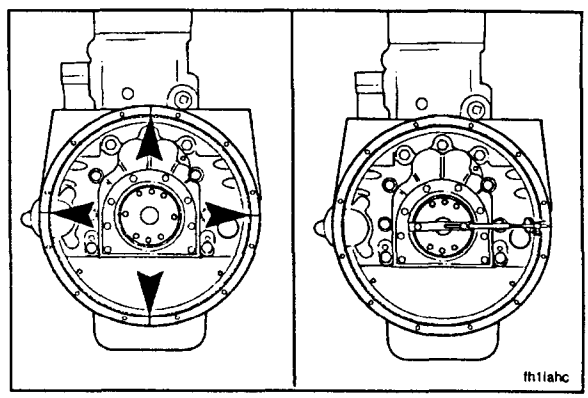

7. Use the accessory drive to rotate the crankshaft until the dial indicator is at the 3:00 o'clock position. Adjust the dial indicator until the needle points to "0" (zero).
8. Rotate the crankshaft until the indicator is at the 9:00 o'clock position. Check the total indicator reading.

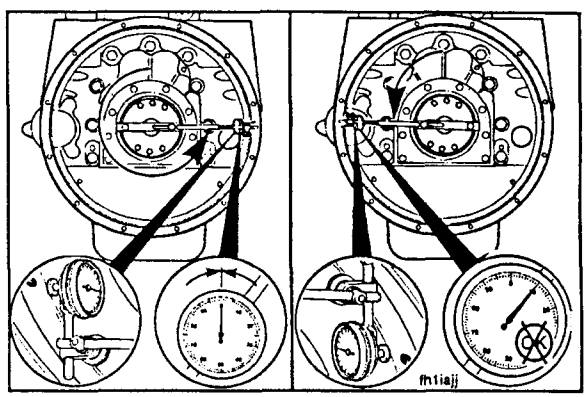

9. If the total indicator reading exceeds the limits in Procedure 7-41, use a mallet to horizontally move the housing one-half the distance of the total indicator reading.
10. Rotate the crankshaft until the indicator is at the 12:00 o'clock position. Adjust the dial until the needle points to "0" (zero).

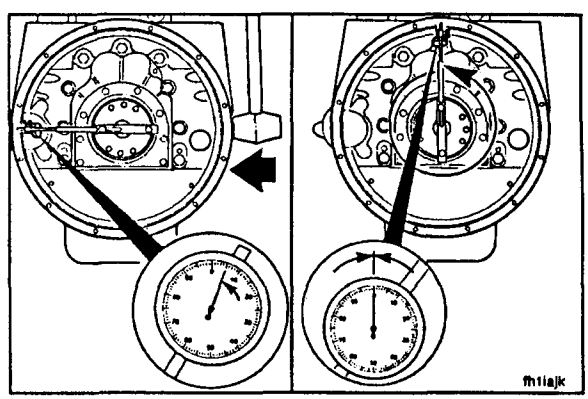

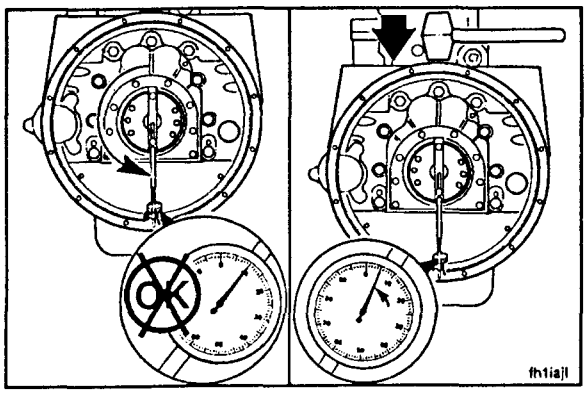

11. Rotate the crankshaft until the indicator is at the 6:00 o'clock position. Check the total indicator reading.
12. If the total indicator reading exceeds the limits in Procedure 7-41, use a mallet to vertically move the housing one-half the distance of the total indicator reading.

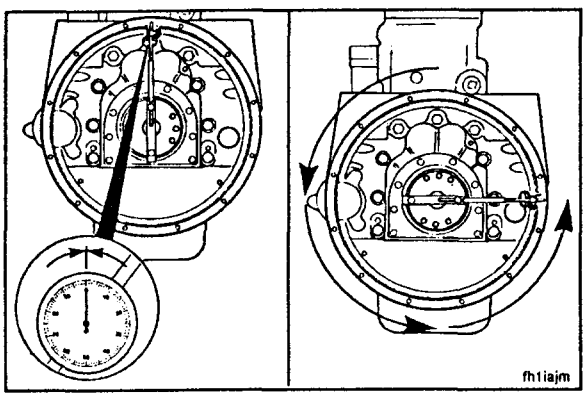

13. Rotate the crankshaft until the indicator is at the 12:00 o'clock position. Adjust the dial until the needle points to "0" (zero).
14. Rotate the crankshaft, and record the indicator reading at the 3:00 o'clock, 6:00 o'clock, and 9:00 o'clock positions.

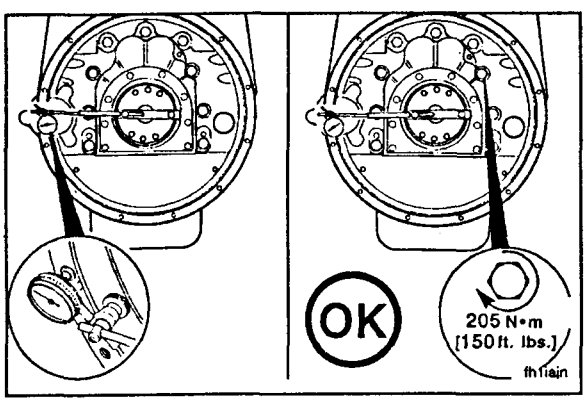

15. After the housing bore is aligned, check to make sure the surface of the housing is in alignment.
16. When the housing alignment is within the limits in Procedure 7-41, tighten the capscrews to 205 N•m [150 ft-lbs] torque. Tighten the capscrews in the sequence outlined in Procedure 7-41.

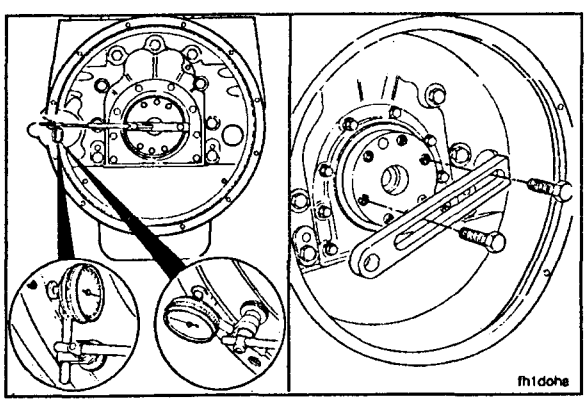

17. After the capscrews are torqued, check the housing bore and the surface alignment again before doweling the housing.
18. Use the appropriate size capscrews. Attach Part No. ST-1232-1 Plate, which is contained in Part No. ST-1232 Drill Ream Fixture.

NOTE: Do not tighten the capscrews so tightly that the plate will not move.

19. Use the locator pin to align the plate with the hole for the dowel pin. Tighten the capscrews. The taper on the pin **must** engage the dowel pin hole.

    The locator pin **must** rotate easily after the capscrews are tightened.

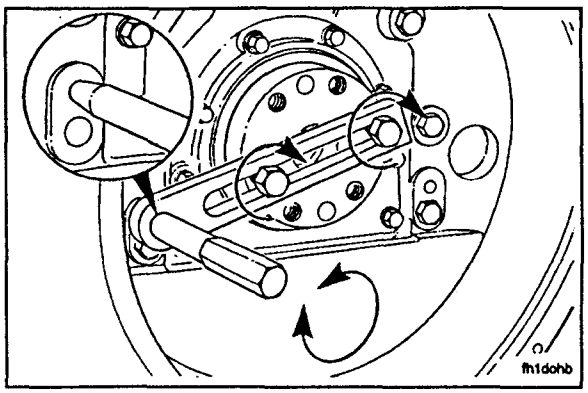

20. Measure the dowel pins which are to be installed.
21. Obtain a reamer (1) that is 0.013 mm to 0.02 mm [0.0005-inch to 0.001-inch] smaller than the dowel.

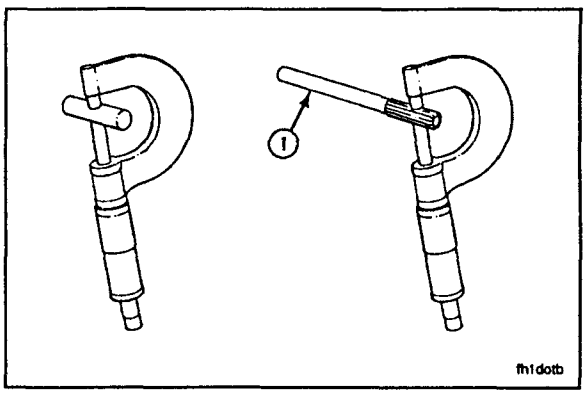

22. The dowel **must** be long enough to protrude from the block one-half of the flywheel housing wall thickness but **must not** protrude past the housing wall.

NOTE: There are three oversize dowel pins available from Cummins Engine Company, Inc.:

Oversize Dowel Pin O.D.			
Overall Dimension		Oversize	
mm	in	mm	in
13.08	[0.515]	0.38	[0.015]
13.46	[0.530]	0.76	[0.030]
13.84	[0.545]	1.14	[0.045]

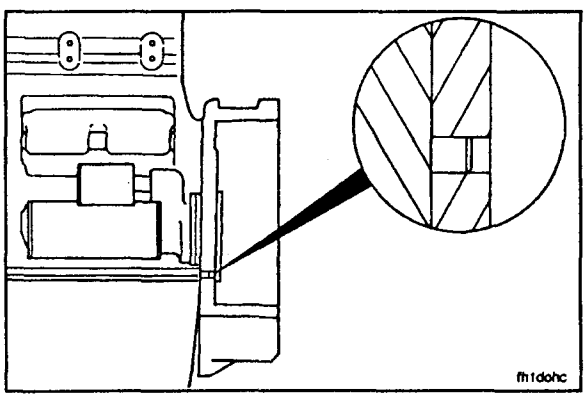

23. Install the appropriate drill bushings. The Table shows the bushings available from Cummins Engine Company, Inc.
24. The drill bushing used **must** be the same size as the reamer (or the drill) which is used.

Drill/Ream Bushing Set 25.4 mm [1 inch] O.D.				
	Oversize mm	Oversize [inch]	Bushing Size mm	Bushing Size [inch]
3376495		Special	12.304	[0.4844]
		Standard	12.700	[0.5000]
	0.38	[0.015]	13.096	[0.5156]
	0.76	[0.030]	13.494	[0.5312]
	1.14	[0.045]	13.879	[0.5464]

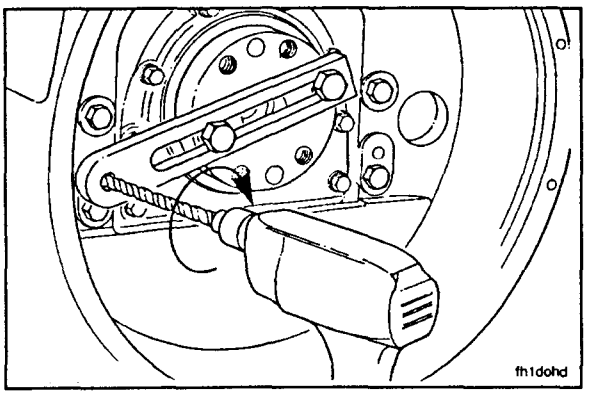

25. If the new dowel pins are more than 0.38 mm [0.015-inch] larger than the old dowels, drill the hole to a size that is slightly smaller than the reamer. Then the reamer will not have to remove an excessive amount of material.

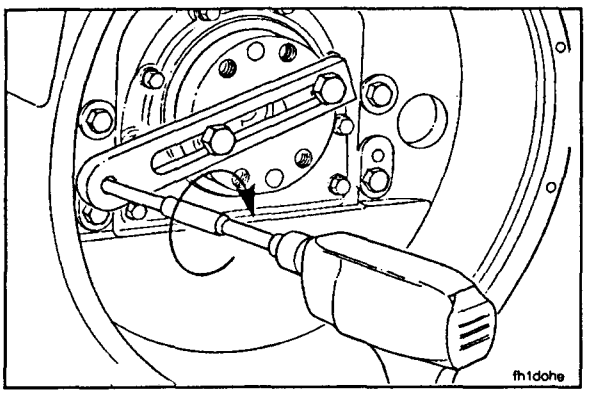

Caution: Do not allow metal chips to enter the engine. Damage to the engine will result.

26. Ream the hole until the reamer touches the bottom of the hole in the block.

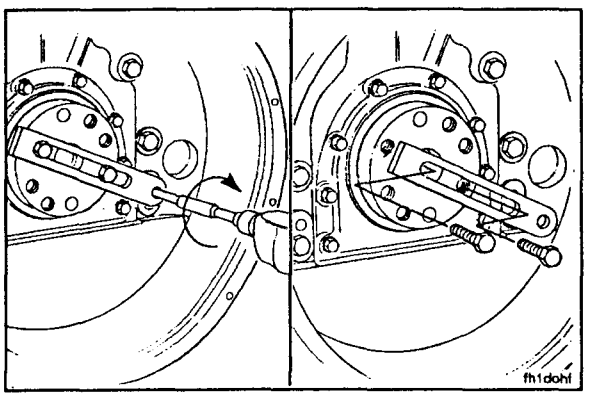

27. After reaming one hole, turn the plate and align it with the second dowel hole. Repeat the procedure in the second hole.
28. Remove the plate from the crankshaft.

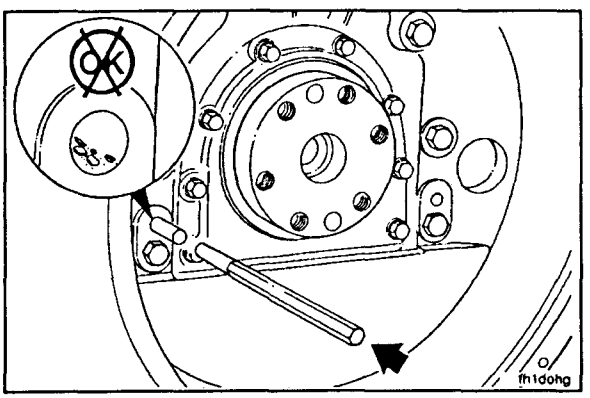

Caution: To avoid possible engine damage, make sure the dowel hole does not contain any metal chips.

29. Use a square nose drift. Drive each dowel in until it touches the bottom of the hole in the block.

30. After the dowels are installed, measure the bore and the surface alignment again.

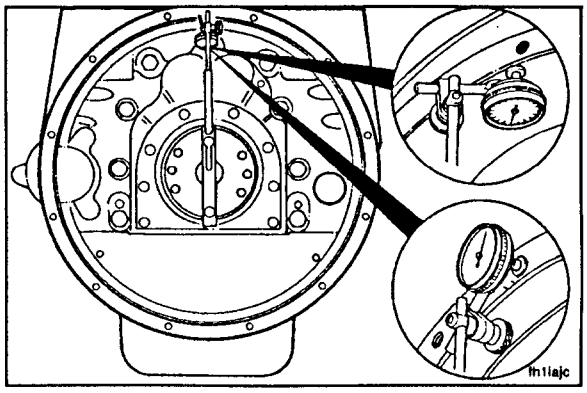

31. Install the two rear engine mounts. Tighten the capscrews to the manufacturer's specifications.

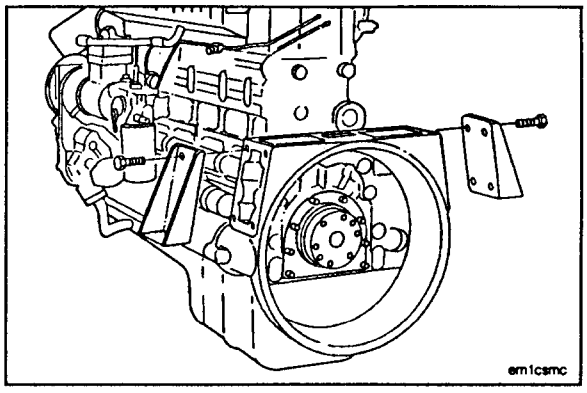

32. Remove the lifting fixture used to support the engine.

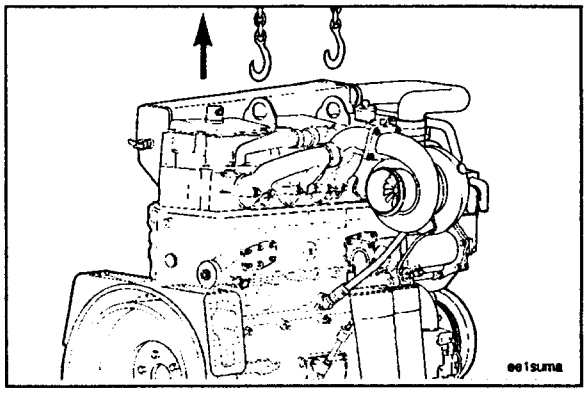

33. Install the flywheel. Refer to Procedure 7-39.
34. Install the clutch, the transmission, and related components. Refer to the manufacturer's instructions.

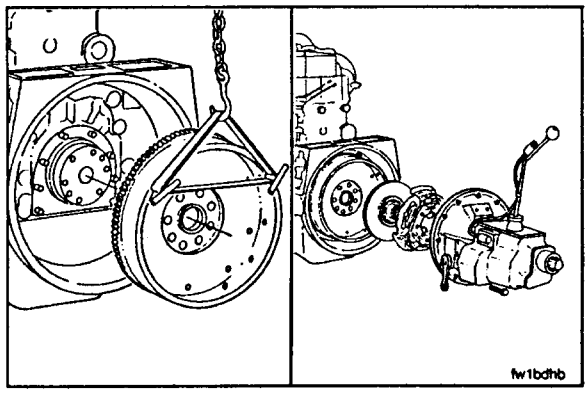

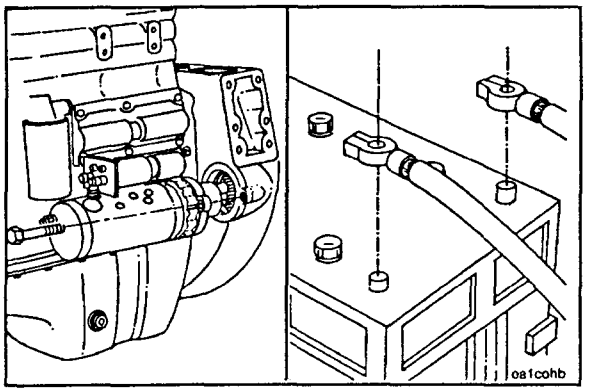

35. Install the starting motor. Refer to Procedure 6-10.
36. Connect the battery cables.

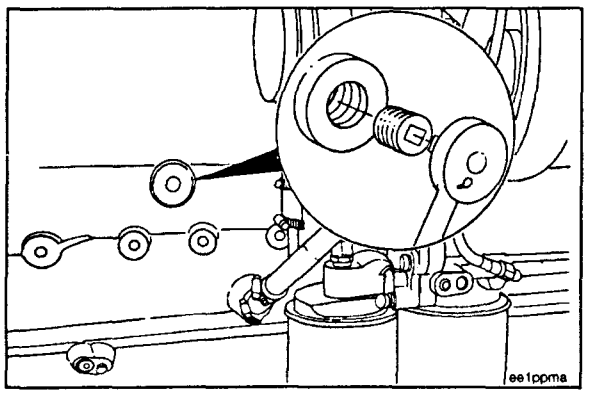

Pipe Plugs and Cup Plugs - Replace (7-43)

Pipe Plugs - Remove

1. Select the appropriate size wrench, and remove the pipe plug.

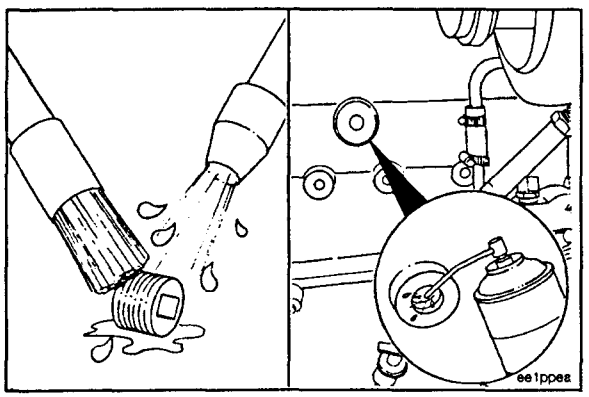

Clean and Inspect

1. Use solvent to clean the threads of the pipe plugs and the threaded bores.

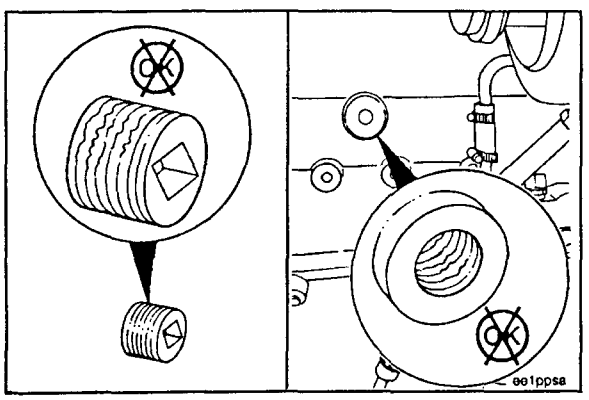

2. Visually inspect the threads of the pipe plugs for mutilation or damage.
3. Visually inspect the threaded bores for damage.
4. Repair the bores if necessary.

Pipe Plugs - Install

1. Apply a film of Part No. 3375068 Cup Plug Sealant to the threads.
2. Install and tighten the pipe plugs.
3. Refer to the following Pipe Plug Torque Values Chart for torque values.

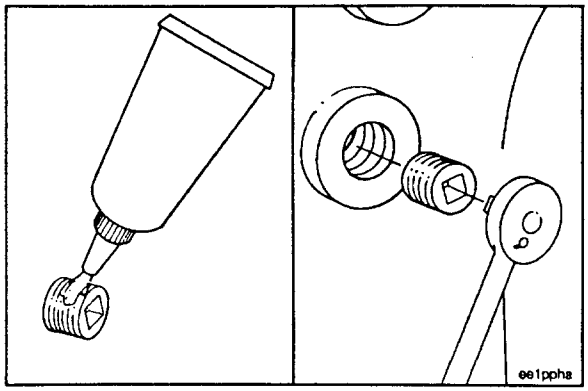

4. Tighten the pipe plugs to the appropriate torque values.

Size			Torque		Torque	
Thread	Actual Thread O.D.		In Aluminum Components		In Cast Iron or Steel Components	
in	mm	[in]	N•m	[ft-lbs]	N•m	[ft-lbs]
1/16	8.1	[0.32]	5	[45 in-lbs]	15	[10]
1/8	10.4	[0.41]	15	[10]	20	[15]
1/4	13.7	[0.54]	20	[15]	25	[20]
3/8	17.3	[0.68]	25	[20]	35	[25]
1/2	21.6	[0.85]	35	[25]	55	[40]
3/4	26.7	[1.05]	45	[35]	75	[55]
1	33.5	[1.32]	60	[45]	95	[70]
1-1/4	42.2	[1.66]	75	[55]	115	[85]
1-1/2	48.3	[1.90]	85	[65]	135	[100]

Cup Plugs - Remove

1. Use a center punch to mark the cup plugs for drilling.

Caution: Do not allow metal shavings to fall in the engine when drilling a hole in the cup plug.

2. Drill a 1/8-inch hole in the cup plug.

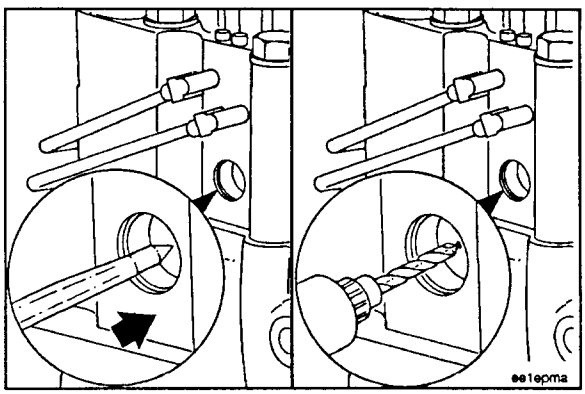

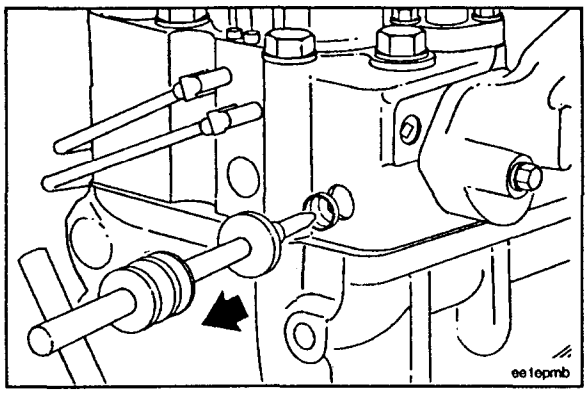

Caution: Discard used cup plugs. Do not use them again.

3. Use a dent puller to remove the plug.

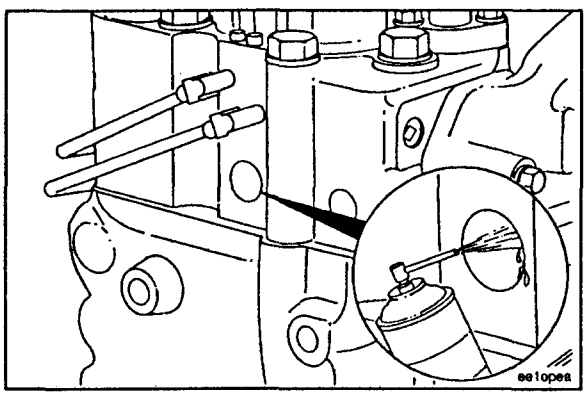

Clean and Inspect

1. Clean the cup plug bores.

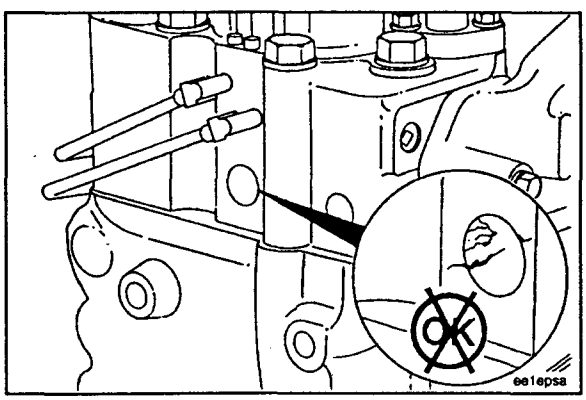

2. Visually inspect the bores for damage.
3. Repair the bores if necessary.

NOTE: Refer to Section 10, "Engine Component Specifications," for cylinder block cup plug bore dimensions and cup plug dimensions.

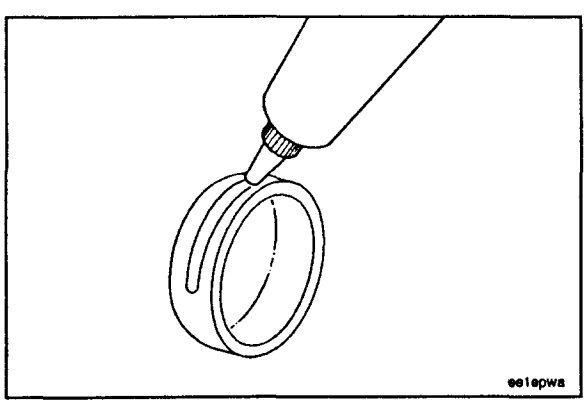

Cup Plugs - Install

Caution: Do not install a used cup plug. Discard all plugs after removal.

Caution: Allow the cup plug sealant to dry for a minimum of 2 hours after the plug is installed before operating the engine. The plug can come out of the bore if the sealant is not dry.

1. Apply a film of Part No. 3375068 Cup Plug Sealant to the outside diameter of the cup plug.

2. Install the cup plug with the appropriate cup plug driver. Refer to "Service Tools Catalog," Bulletin No. 3377971.

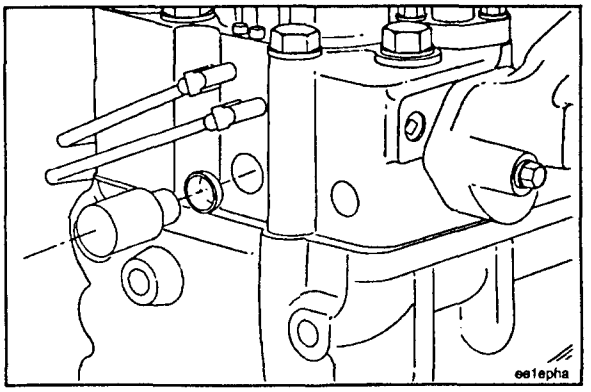

Caution: The plug must be installed with the edge of the plug deeper than the leading chamfer of the bore.

Caution: Do not install the plug too deeply. The cross drillings in the cylinder block may be blocked. If the plug is not installed straight and flat, it must be replaced with a new cup plug.

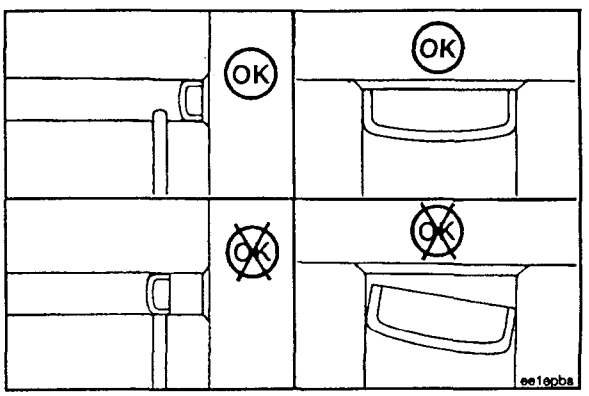

Section 8 - Engine Testing (″In-Chassis″)

Table of Contents

	Reference No.	Page
Service Tools	8-00	2

Troubleshooting and Repair List

	Procedure No.	Page
General Engine Test Specifications and Procedures	8-01	3
Chassis Dynamometer Operation	8-02	7
Engine Run-In Procedure (Chassis Dynamometer)	8-03	9
Engine Run-In Procedure ″In-Chassis″ - (On- and Off-Highway Vehicles)	8-04	11

Required Service Tools - (8-00)

Engine Testing (‘‘In-Chassis’’)

Procedure No.	Part No.	Description
8-01	ST-434	Vacuum Gauge
	ST-435-6	Pressure Gauge (in Part No. 3375932 Snap Rail Pressure Gauge)
	ST-1273	Pressure Gauge
	3375150	Blowby Checking Tool
	3376375	Fuel Measuring Device
	3376859	Coupler

*General Engine Test Specifications And Procedures - (8-01)

Maintain the following limits during a chassis dynamometer test:

Intake Restriction
(Maximum)

- Clean Filter ..... 380cm H_20 [15.0 in.H_20]
- Dirty Filter ..... 635cm H_20 [25.0 in.H_20]
- Exhaust Back Pressure ..... 75cm Hg [3.0 in.Hg]
- Blowby** (at rated Engine Speed and Load)

  New or rebuilt engines (less than 160,000 km [100,000 miles] or 3,600 hours)

  All models **except** NTC-475 ..... 305cm H_20 [12.0 in.H_20]
  NTC-475 ..... 460cm H_20 [18.0 in. H_20]

  Used engines (over 160,000 km [100,000 miles] or 3,600 hours)

  All models **except** NTC-475 ..... 460cm H_20 [18.0 in. H_20]
  NTC-475 ..... 760cm H_20 [30.0 in. H_20]

Oil Pressure

- Low Idle (minimum allowable) ..... 70kPa [10.0 psi]
- At 1300 RPM or Torque Peak (minimum allowable) ..... 205kPa [30 psi]
- At 2100 RPM

  Automotive ..... 240 to 310 kPa [35 to 45 psi]

  Industrial ..... 310 to 375 kPa [45 to 55 psi]

Fuel Filter Restriction
(Maximum)

- Clean Filter ..... 100cm Hg [4.0 in.Hg]
- Dirty Filter ..... 200cm Hg [8.0 in.Hg]

Fuel Return Restriction ..... 64cm Hg [2.5 in.Hg]
(Maximum)

*** Due to variations in ratings of different engine models, refer to the specific ''Engine Data Sheet'' for the particular engine model being tested.**

** Part No. 3375150 Blowby Checking Tool has a special 7.67 mm [0.302-inch] orifice that **must** be used to get an accurate reading.

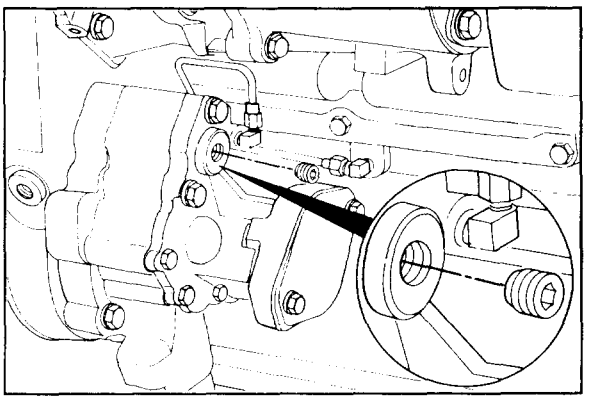

General Engine Test Procedures

Caution: The lubricating oil system must be primed before operating the engine after rebuild to avoid internal component damage. Do not prime the system from the bypass filter; the filter will be damaged.

1. Remove the pipe plug from the lubricating oil pump cover.

NOTE: Lubricating oil pumps on Big Cam IV engines are equipped with a 9/16 - 18 UNF Compuchek® coupling nipple. Use Part No. 3376859 Coupler to connect the priming pump to the coupling.

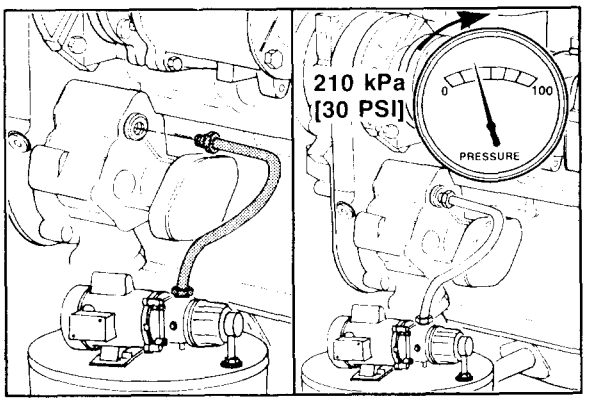

2. Install the priming pump oil supply hose. Use clean 15W-40 lubricating oil out of a bucket or a container. Supply oil to the crossover oil passage.
3. Allow the oil to flow until the oil pressure gauge indicates a maximum pressure of 210 kPa [30 psi] to prime the lubricating oil system.

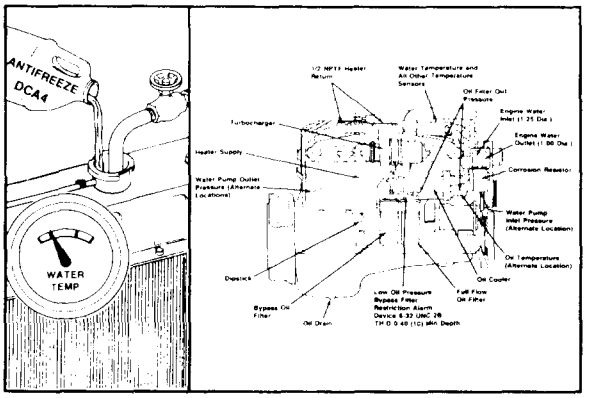

4. Fill the engine with the correct coolant. Refer to Procedure 1-07.

NOTE: The number of instruments and gauges will vary according to the type and the capability of the test equipment used.

5. Refer to the "Engine Diagrams" in Section E for the correct system pressure and temperature gauge connecting locations.

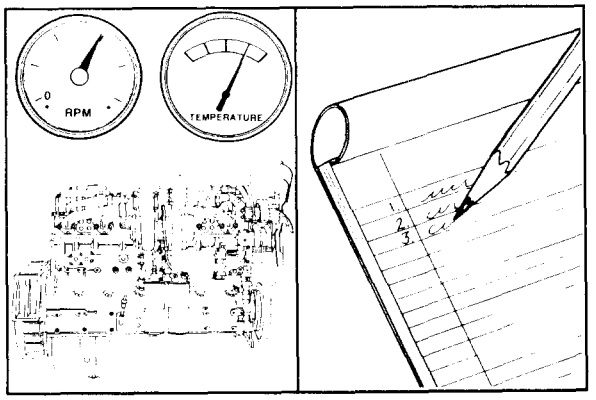

6. To correctly monitor an engine's performance, record the following parameters:

- Lubricating oil pressure (vehicle instrument panel)
- Coolant temperature (vehicle instrument panel)
- Coolant pressure*
- Fuel pressure*
- Fuel rate*
- Intake manifold pressure*
- Inlet air restriction*
- Blowby*
- Engine speed (RPM) (vehicle instrument panel)
- Wheel horsepower (WHP) (dynamometer controls)

* See the following for the Service Tools required and the installation locations on the engine.

7. Measure the coolant pressure at the cylinder block water manifold. The pressure gauge **must** have a minimum capacity of 275 kPa [40 psi].

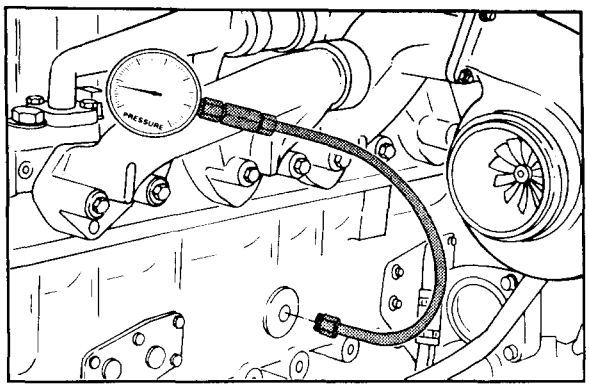

8. Measure the fuel pressure (rail pressure). Install Part No. ST-435-6 Pressure Gauge (in Part No. 3375932 Snap Rail Pressure Gauge) or the pressure gauge in Part No. 3376375 Fuel Measuring Device to the shutoff valve.

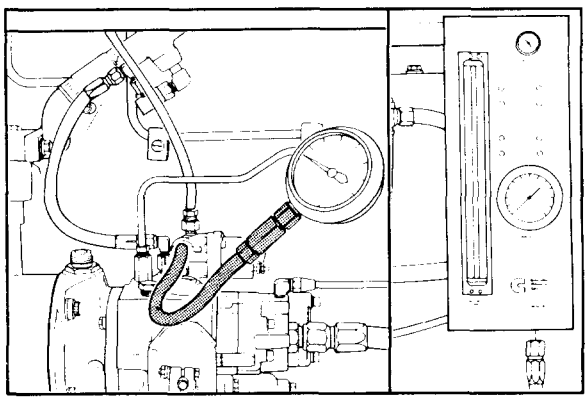

9. Measure the rate of fuel consumption. Install Part No. 3376375 Fuel Measuring Device to the engine as follows:

   - The fuel return hose from the engine to the fuel measuring device.
   - The fuel inlet hose to the fuel filter inlet.
   - The return hose from the device to the tank.
   - The fuel inlet hose to the device from the tank suction hose.

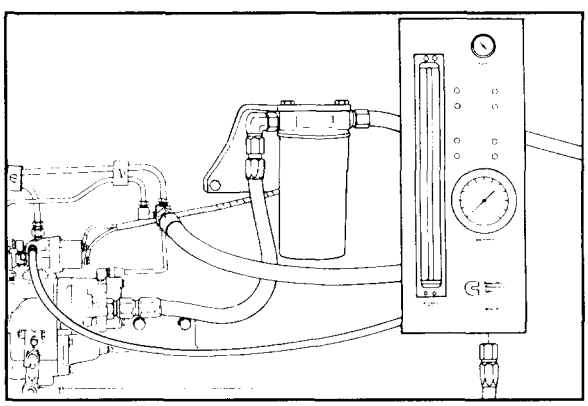

10. Measure the intake manifold pressure (turbocharger boost). Install Part No. ST-1273 Pressure Gauge in the location shown.

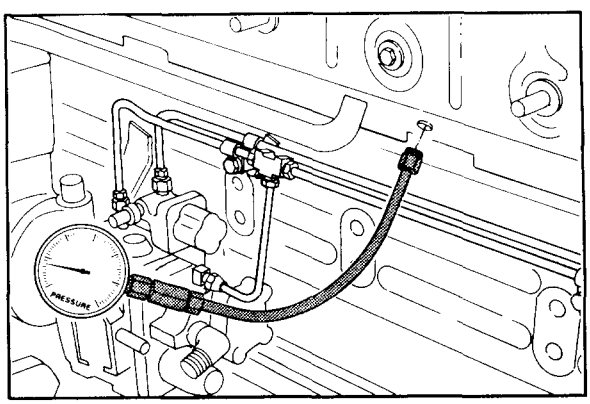

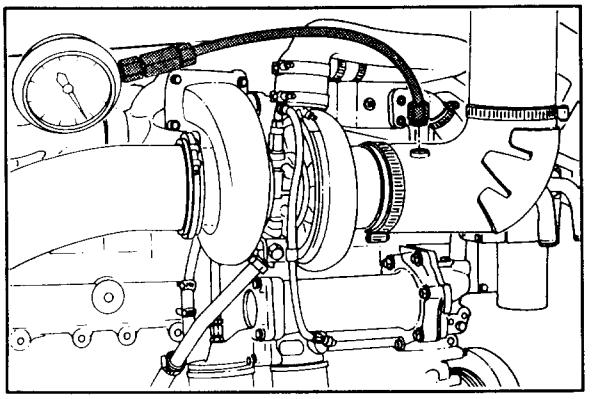

11. Measure the inlet air restriction. Install ST-434 Vacuum Gauge or a manometer in the intake air piping.

NOTE: The gauge adapter **must** be installed at a 90-degree angle to the air flow in a straight section of pipe, a minimum of one pipe diameter before the turbocharger.

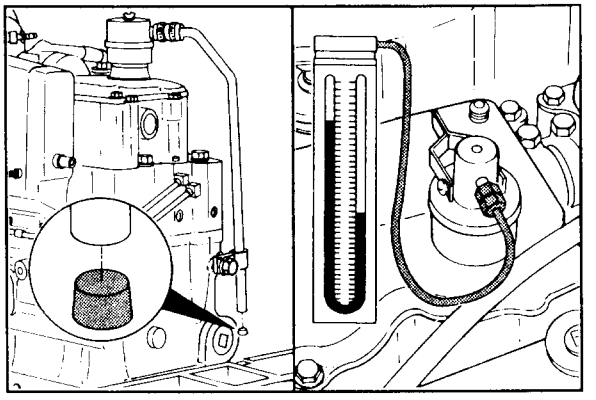

12. Measure the blowby by installing a plug in the crankcase breather vent. Remove the "bottle stopper" oil filler cap. Replace the oil filler cap with Part No. 3375150 Blowby Checking Tool. Connect the blowby tool to a manometer.

NOTE: Excessive blowby indicates a turbocharger malfunction or an engine internal components malfunction, allowing combustion gases to enter the crankcase.

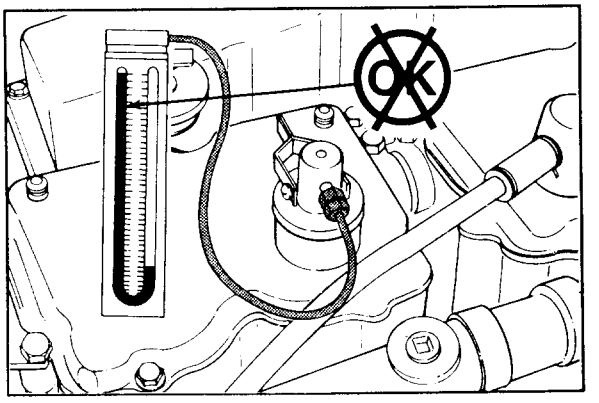

NOTE: If a sudden increase in blowby occurs, or if blowby exceeds the maximum allowable limit during any run-in step, proceed to the next step and continue the run-in. If blowby does **not** reach an acceptable level, discontinue the run-in and determine the cause.

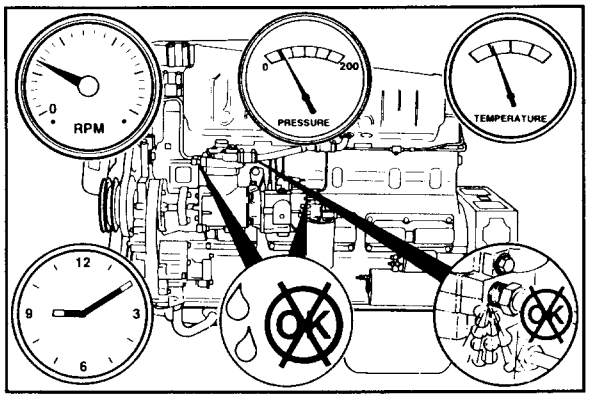

NOTE: Avoid long idle periods. Operate the engine at low idle only long enough (8 to 10 minutes) to check for correct oil pressure and any fuel, oil, water, or air leaks.

Caution: Do not allow the engine speed to exceed 1,000 RPM before run-in. The internal components can be damaged.

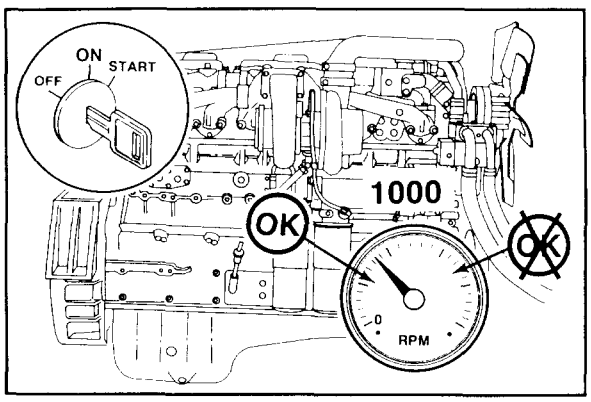

Caution: Do not shut the engine off immediately after the last step of the run-in is completed. Allow the engine to cool by operating at low idle for a minimum of 3 minutes to avoid internal component damage.

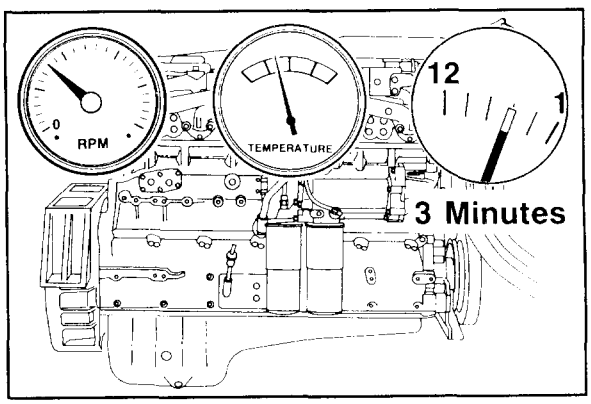

Chassis Dynamometer Operation - (8-02)

1. The performance of an engine installed in "on-highway" vehicles can be tested on a chassis dynamometer.

NOTE: Due to driveline efficiency and engine-driven accessories, the wheel horsepower (WHP) will be reduced by approximately:

- 20 percent for single axle vehicles
- 25 percent for tandem axle vehicles

NOTE: These percentages are used for engines run-in only and are **not** to be used as absolute figures.

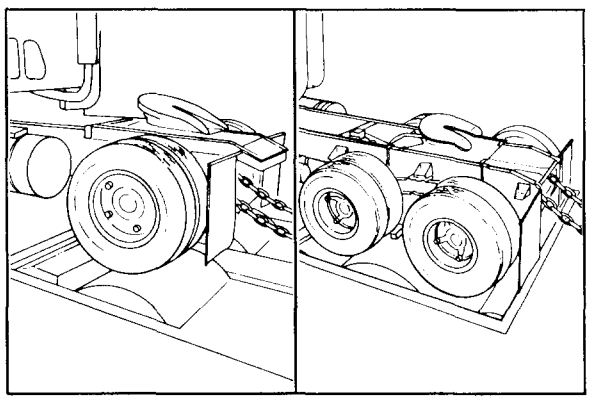

Caution: Follow all the vehicle manufacturer's safety precautions before installing or operating a vehicle on a chassis dynamometer.

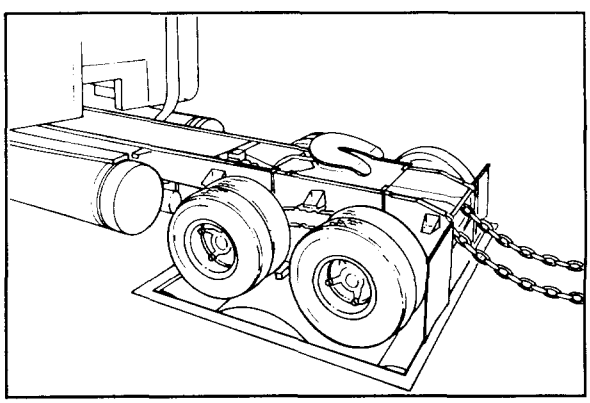

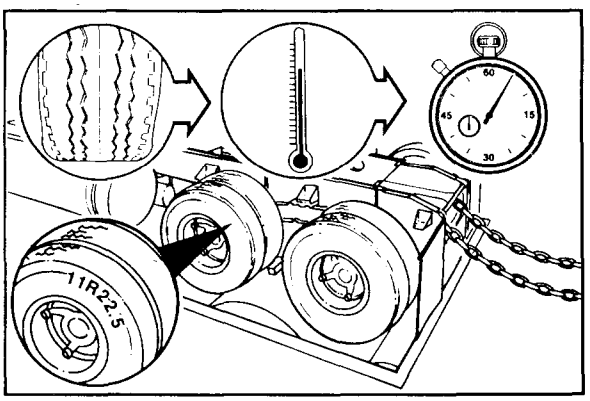

Caution: Low profile radial tires are more sensitive to heat than bias ply tires. Excessive operating time at full load can damage tires due to overheating. Check the tire manufacturer's recommendations for the maximum allowable chassis dynamometer operating time.

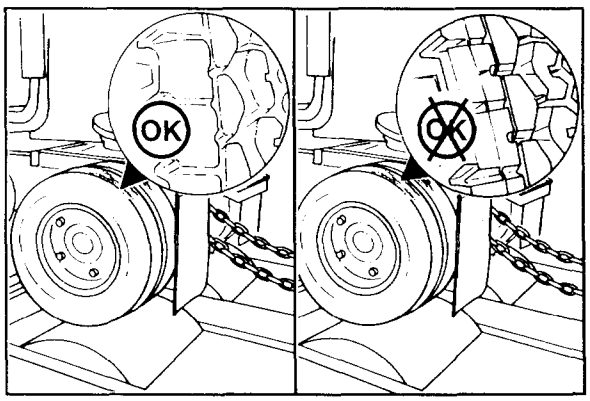

2. Follow the general safety precautions listed below while operating the chassis dynamometer:
   - Use tires that have more than 160 kilometers [100 miles] on them. Do **not** use new tires.
   - Do **not** use recapped tires or tires of different sizes or designs.

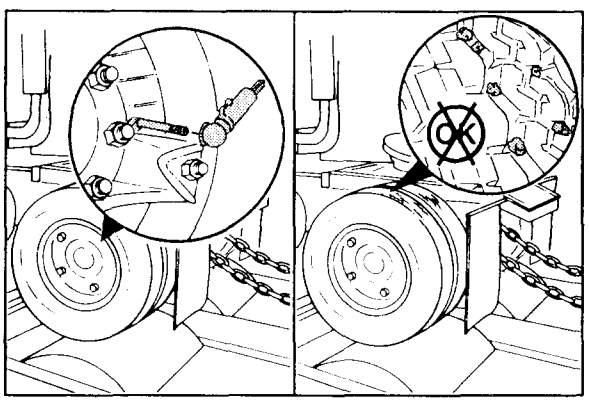

- Make sure the tires are inflated to the manufacturer's specifications.
- Remove all rocks or other material from the tread of all tires that will be rotating on the dynamometer rollers.

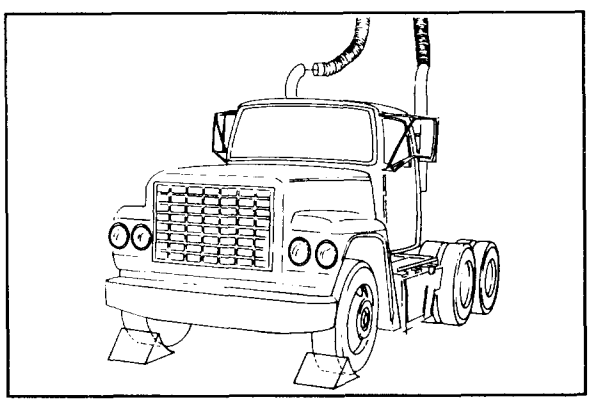

- Make sure there is correct overhead clearance for exhaust stacks, air deflectors, or other attachments above the cab.

- Carefully position the vehicle on the rollers.

Caution: To prevent damage to the chassis dynamometer, there must be some slack in the tension of the "tie down" chains.

- Attach the "tie down" chains to the rear of the vehicle, and put wheel chocks in front of the front wheels.

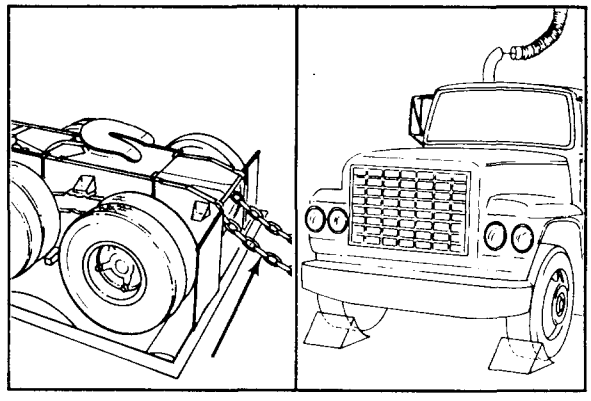

- Adjust the vehicle and dynamometer room exhaust system to make sure all exhaust gases are removed from the room.
- Refer to the chassis dynamometer and vehicle manufacturer's recommendations and specifications for testing procedures.

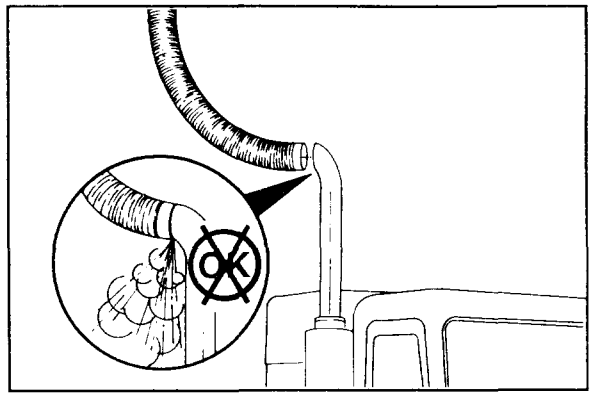

Engine Run-In Procedure (Chassis Dynamometer) - (8-03)

Caution: Refer to "General Engine Test Specifications and Procedures" on page 3 before operating the engine to avoid internal component damage.

NOTE: Refer to "Chassis Dynamometer Operation" on page 7 for general operating procedures and safety precautions.

NOTE: Operate the vehicle in a gear that produces a road speed of 90 to 95 km/h [55 to 60 mph].

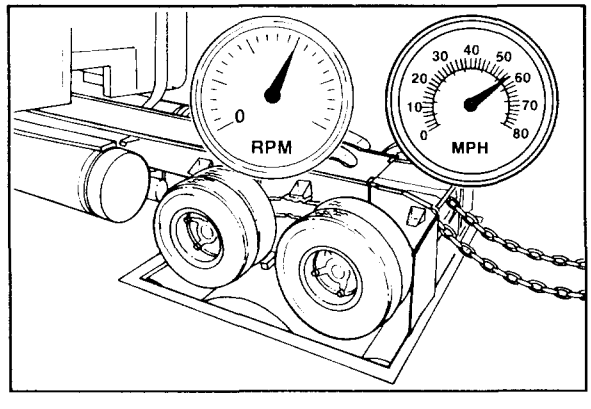

1. Operate the engine at 1,200 RPM and 25 percent of rated load until the water temperature reaches 70°C [160°F].

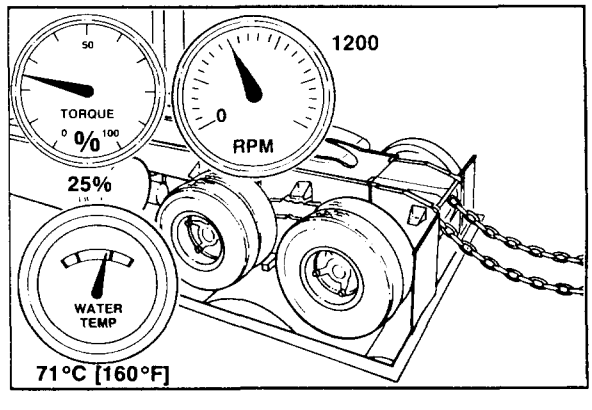

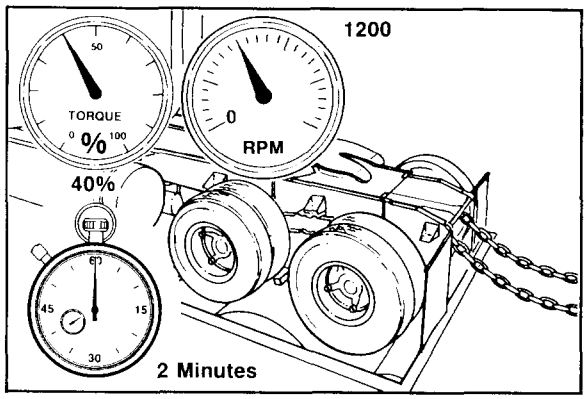

2. Operate the engine at 1,200 RPM and 40 percent of rated load for 2 minutes. Check the gauges, and record the readings.

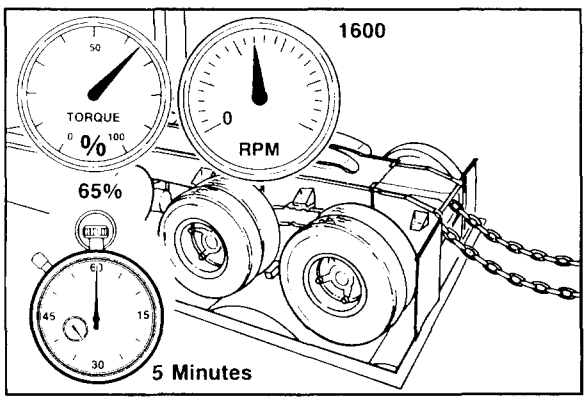

3. Operate the engine at 1,600 RPM and 65 percent of rated load for 5 minutes. Check the gauges, and record the readings.

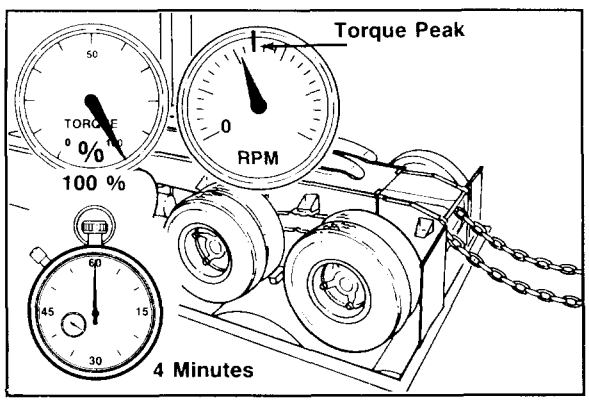

4. Operate the engine at nominal torque peak RPM and full load for 4 minutes. Check the gauges, and record the readings.

NOTE: Refer to the engine "Data-Sheet" for the torque peak RPM of the engine model being tested.

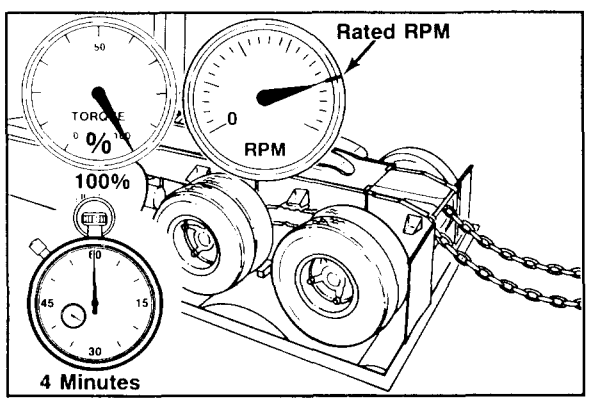

5. Operate the engine at rated speed (RPM) and full load for 4 minutes. Check the gauges, and record the readings. Compare the readings to those published on the appropriate engine "Data-Sheet."

Caution: Do not shut the engine off immediately after the run-in is completed. Allow the engine to cool by operating it at low idle for a minimum of 3 minutes to avoid internal component damage.

6. Make sure all instrumentation is removed before removing the vehicle from the dynamometer.

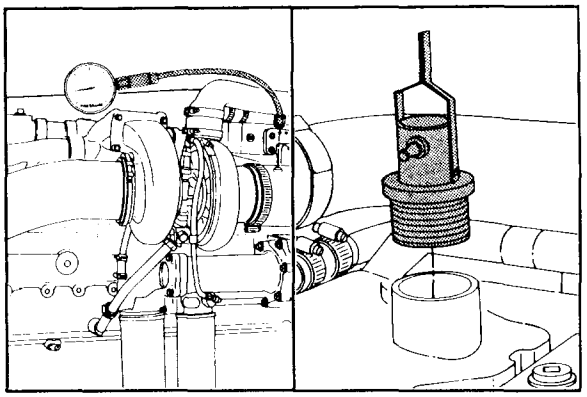

Engine Run-In Procedure "In-Chassis" (On and Off-Highway Vehicles) - (8-04)

On-Highway

Caution: Refer to "General Engine Test Specifications and Procedures" on page 3 before operating the engine to avoid internal component damage.

1. Operate the engine at 1,500 to 1,800 RPM in high gear for the first 80 to 160 kilometers [50 to 100 miles] after rebuild.

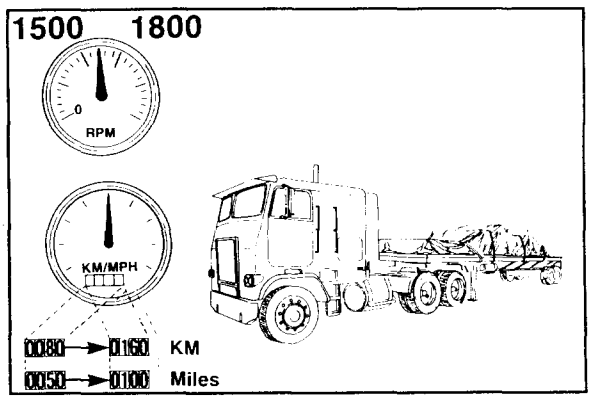

NOTE: Do **not** idle the engine for more than 5 minutes at any one time during the first 160 kilometers [100 miles] of operation.

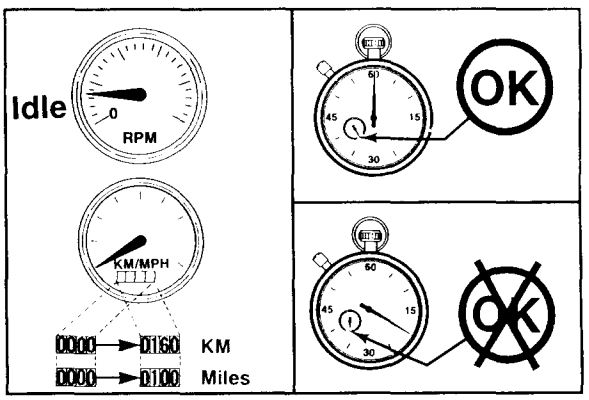

Off-Highway

Caution: Refer to "General Engine Test Specifications and Procedures" on page 3 before operating the engine to avoid internal component damage.

1. Operate the engine as follows during the first 3 hours after rebuild:

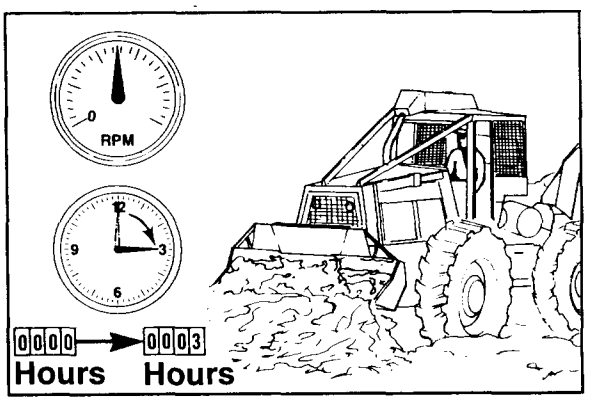

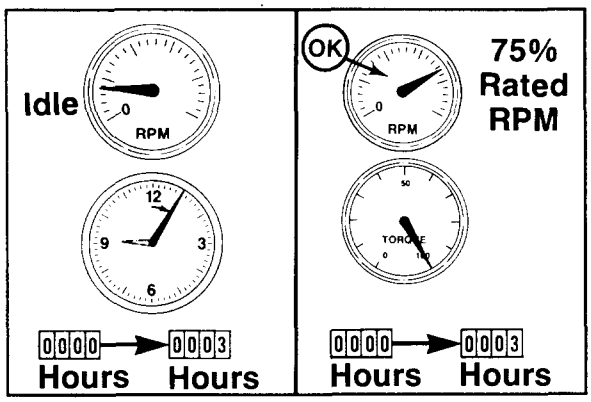

a. Do **not** idle the engine for more than 5 minutes at any one time.

b. Operate the engine at 75 percent throttle while loaded.

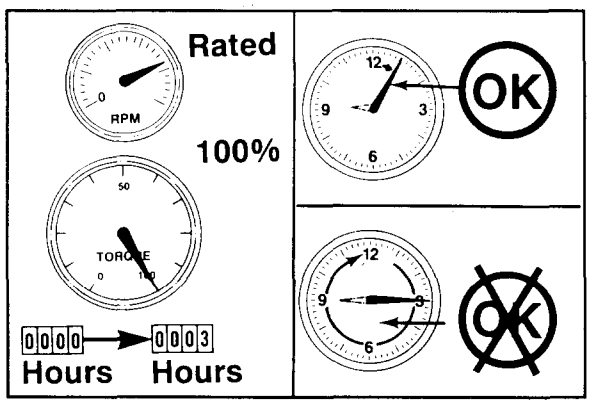

c. Do **not** operate the engine at rated speed (RPM) and full load for more than 5 minutes at any one time.

Section 9 - Engine Remove And Install

Table Of Contents

	Reference No.	Page
General Information	9-01	2
Service Tools	9-02	2

Troubleshooting and Repair List

	Procedure No.	Page
Engine-Remove	9-03	2
Engine Mounts-Inspect	9-04	5
Engine-Install	9-05	5

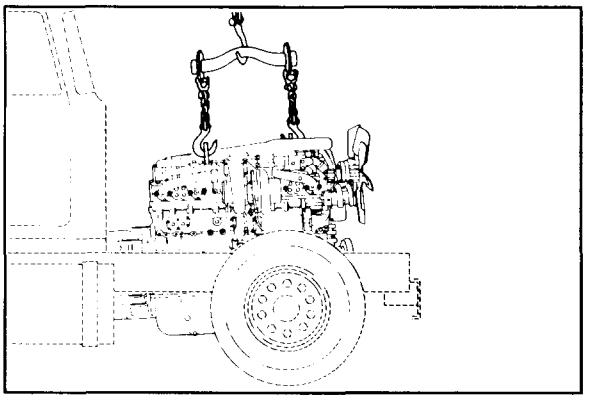

General Information - (9-01)

The procedures required to replace an engine will vary with different engine models, the type of equipment, optional equipment, and the shop facilities. Use the following procedures as a guide.

NOTE: All replacement steps will **not** apply to all types of equipment. Complete only the steps which apply to the equipment involved. Use the equipment manufacturer's recommendations and precautions for removal of chassis parts to gain access to the engine.

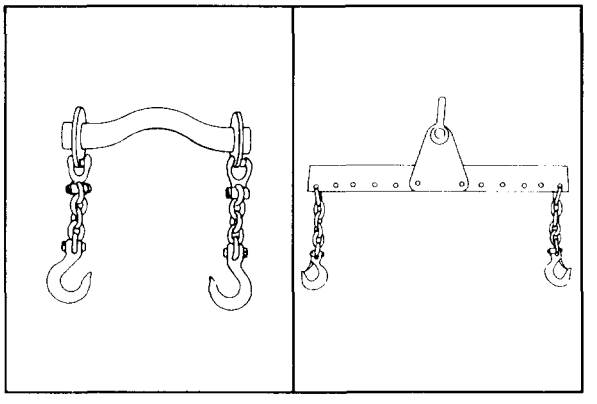

Service Tools - (9-02)

The following Service Tools are required:

- Part No. ST-125 Engine Lifting Fixture
- Part No. ST-1258 Engine Lifting Fixture

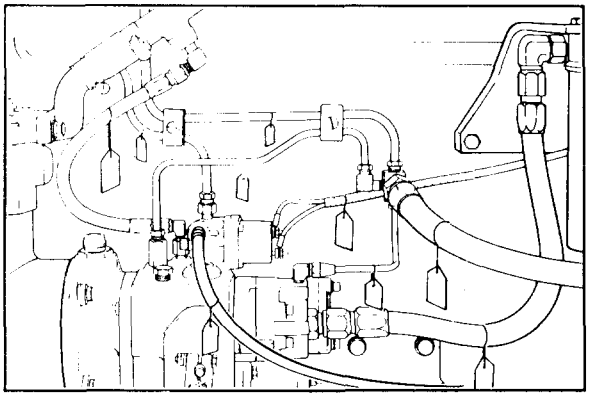

Engine - Remove (9-03)

NOTE: Place a tag on all hoses, lines, linkage, and electrical connections as they are removed to identify their locations on the engine.

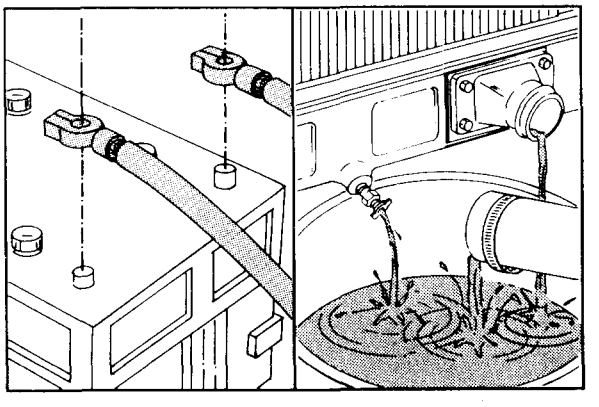

1. Disconnect the battery cables.
2. Drain the engine coolant. Refer to Procedure 1-06.

3. Drain the lubricating oil. Refer to Procedure 2-09.
4. Disconnect the starter cable, the engine ground straps, the cab or chassis to engine hoses, the tubing, the electrical wires, and the hydraulic lines.

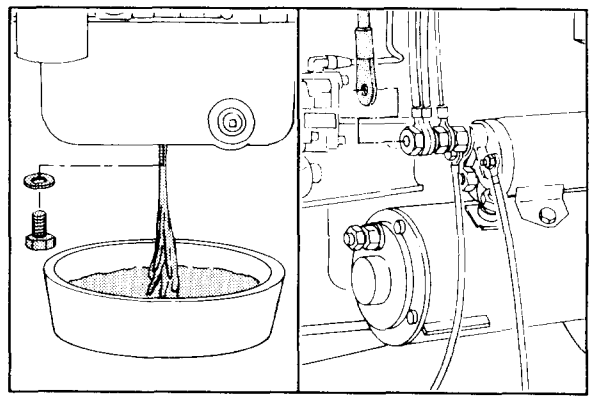

5. Disconnect the intake and the exhaust air pipes.
6. Disconnect all chassis mounted "engine driven" accessories.

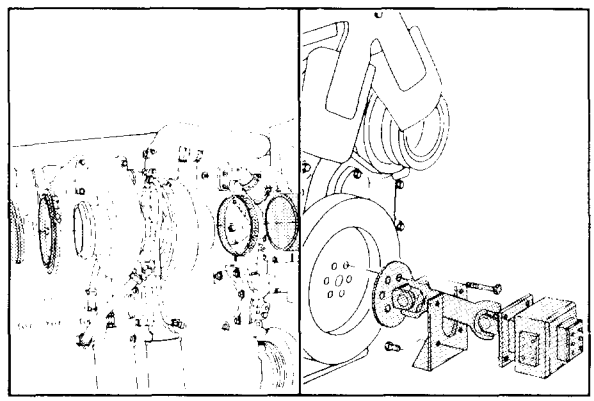

7. Disconnect the throttle linkage from the fuel pump control lever.
8. Disconnect the drive units from the flywheel.

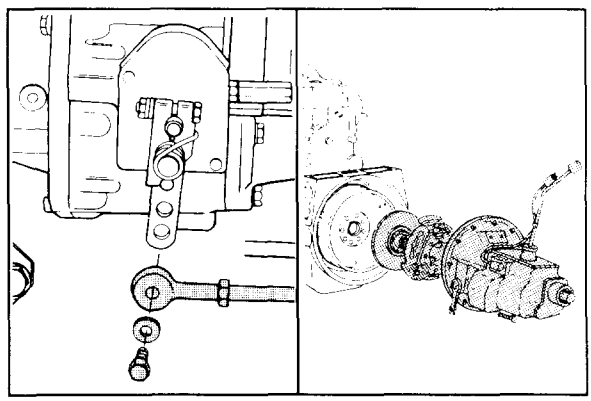

NOTE: If the rear engine mounts are attached to the transmission, it may be necessary to remove the engine and the transmission as an assembly.

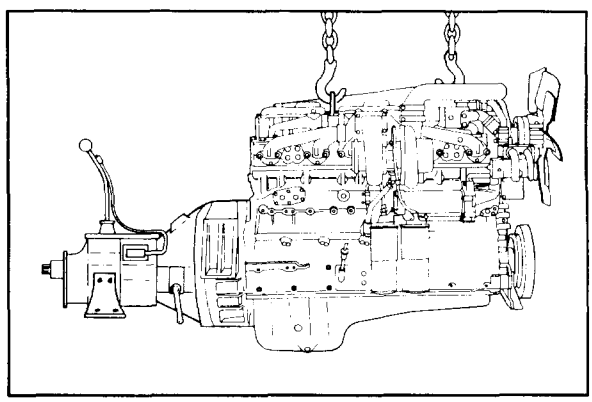

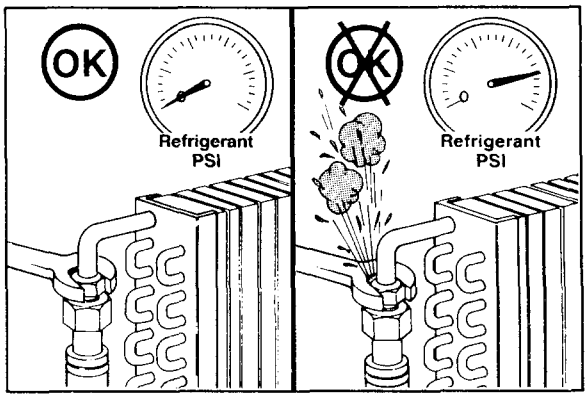

Warning: If a liquid refrigerant system (air conditioning) is used, wear eye and face protection and wrap a cloth around the fittings before removal. Liquid refrigerant can cause serious eye and skin injury.

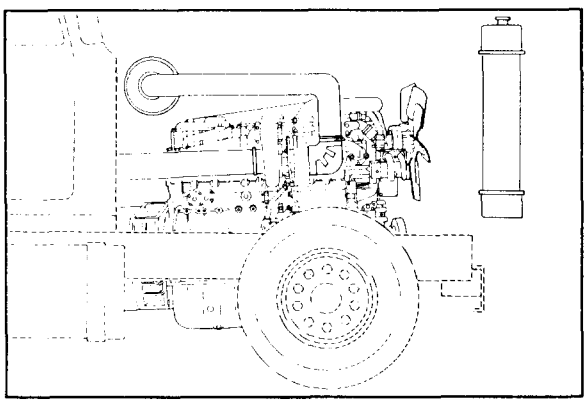

9. Remove all chassis components necessary to remove the engine from the equipment.

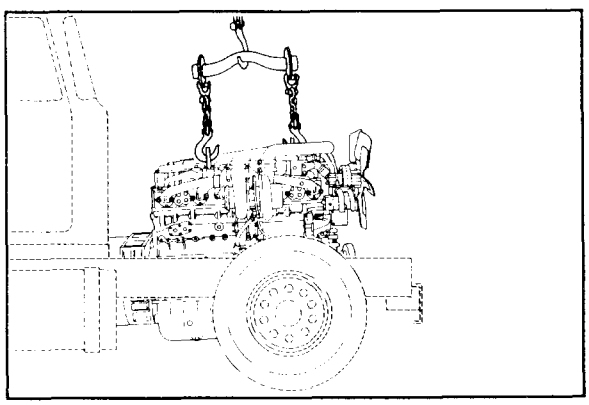

Warning: The engine lifting equipment must be designed to safely lift the engine and the transmission as an assembly. The dry weight of the standard engine with accessories is 1190 kg [2610 lbs]. Refer to the equipment manufacturer's specifications for the transmission weight.

10. Use a correctly rated hoist, and attach Part No. ST-125 or Part No. ST-1258 Engine Lifting Fixture to the engine mounted lifting brackets to remove the engine.

NOTE: If the transmission is **not** removed, place a support under the transmission to prevent it from falling.

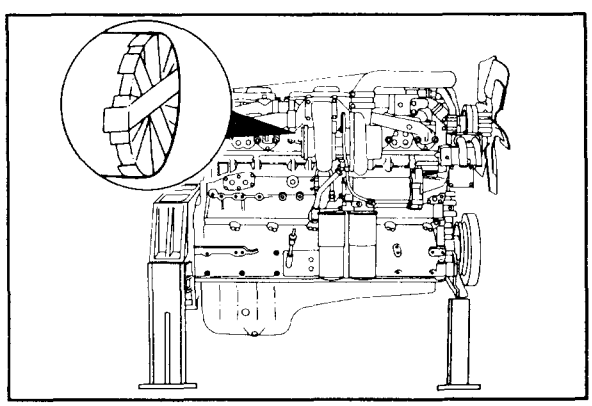

11. Cover all engine openings to prevent dirt and debris from entering the engine.
12. Place the engine on suitable engine support stands.

13. Remove and use all remaining accessories and brackets with the replacement engine.

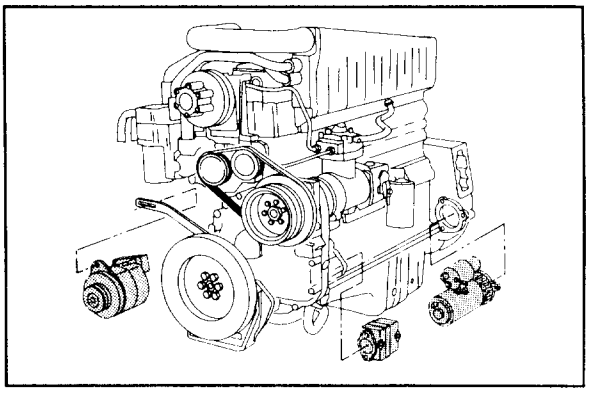

Engine Mounts - Inspect (9-04)

1. Inspect all rubber-cushioned mounts for cracks or damage.
2. Inspect all mounting brackets for cracks or damaged bolt holes.

NOTE: Damaged engine mounts and brackets can cause the engine to move out-of-alignment, can damage the driveline components in the equipment, and can result in vibration complaints.

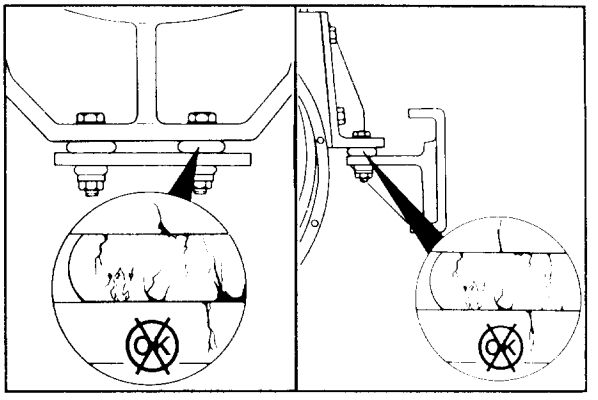

Engine - Install (9-05)

1. Install all accessories and brackets that were removed from the previous engine.

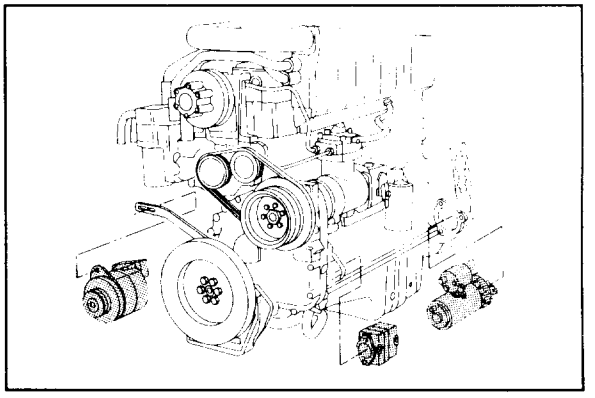

NOTE: If the rear engine mounts are attached to the transmission, it may be necessary to install the engine and the transmission as an assembly.

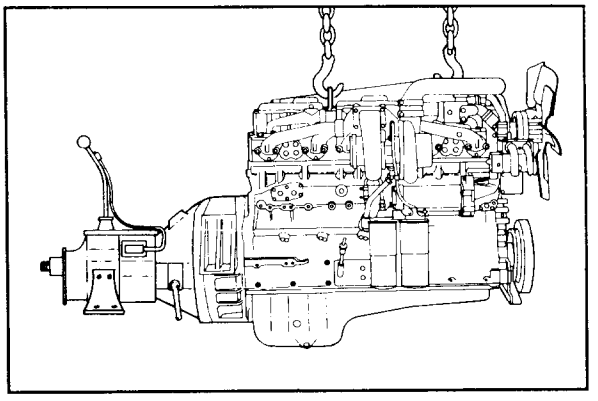

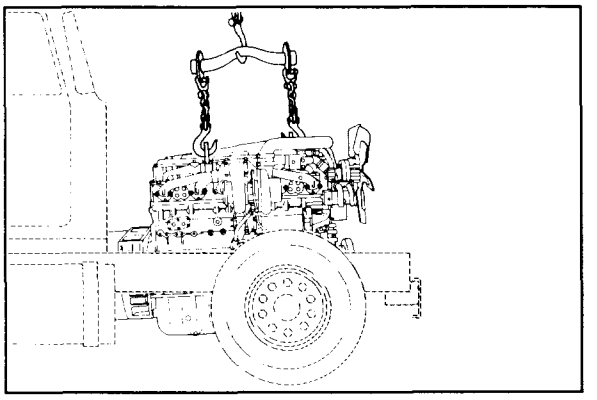

Warning: The engine lifting equipment must be designed to safely lift the engine and the transmission as an assembly. The dry weight of the standard engine with accessories is 1190 kg [2610 lbs.]. Refer to the equipment manufacturer's specifications for the transmission weight.

2. Use a correctly rated hoist, and attach Part No. ST-125 or Part No. ST-1258 Engine Lifting Fixture to the engine mounted lifting brackets to install the engine.

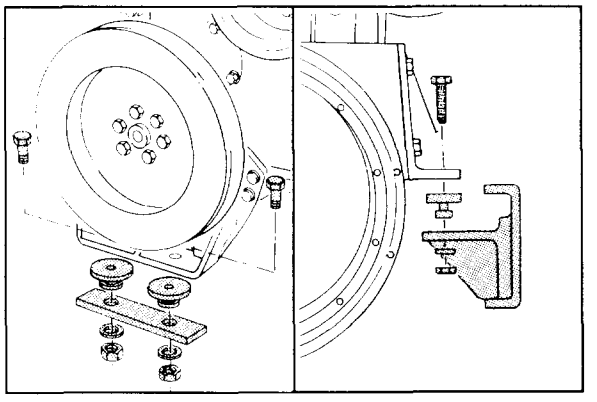

3. Align the engine in the chassis, and tighten the engine mounting capscrews. Refer to the equipment manufacturer's torque specifications.

4. Connect all engine and chassis mounted accessories which were removed.

NOTE: Make sure all lines, hoses, and tubes are correctly routed and fastened to prevent damage.

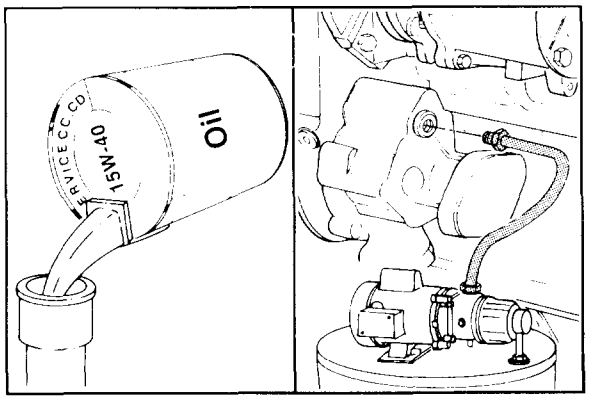

5. Fill the engine with clean 15W-40 lubricating oil. Refer to Procedure 2-10.

NOTE: The total oil capacity of the standard engine, including full flow and bypass filters, is 42 litres (11.0 U.S. Gallons).

NOTE: The engine lubricating oil system must be pressurized. Refer to Procedure 8-01.

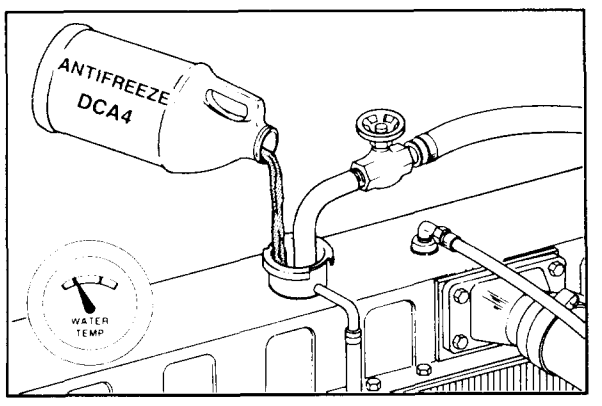

6. Fill the cooling system with 50 percent water, 50 percent ethylene glycol base antifreeze, and DCA corrosion protection. Refer to Procedure 1-07.

NOTE: The total coolant capacity (engine only) for aftercooled engines is 21 litres [22 U.S. Qts.].

NOTE: Refer to the equipment manufacturer's specifications for radiator and system capacity.

7. Make a final inspection to make sure all hoses, wires, linkages, and components have been correctly installed and tightened.

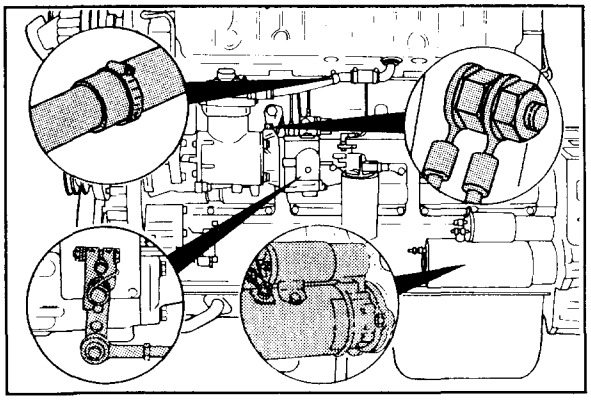

Warning: Do not remove the radiator cap from a hot engine. Hot steam can cause serious personal injury. The engine coolant temperature must be below 70°C [160°F].

8. Operate the engine at low idle for 2 to 3 minutes.
9. Stop the engine and wait 5 to 7 minutes for the oil to drain to the oil pan. Check the oil and the coolant levels again.

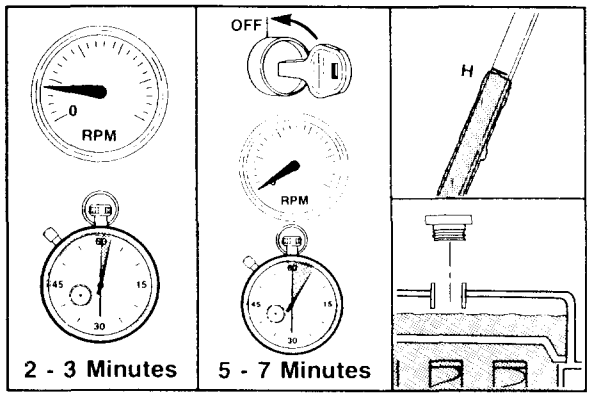

10. Fill the engine to the correct oil and coolant levels if necessary. Refer to Procedures 2-10 and 1-07, respectively.

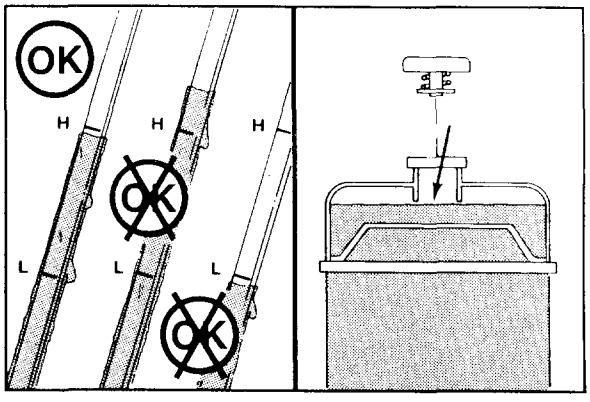

11. Operate the engine for 8-10 minutes to check for correct engine operation, unusual noises, and coolant, fuel or lubricating oil leaks.
12. Repair all leaks and component problems. Refer to the appropriate Sections.

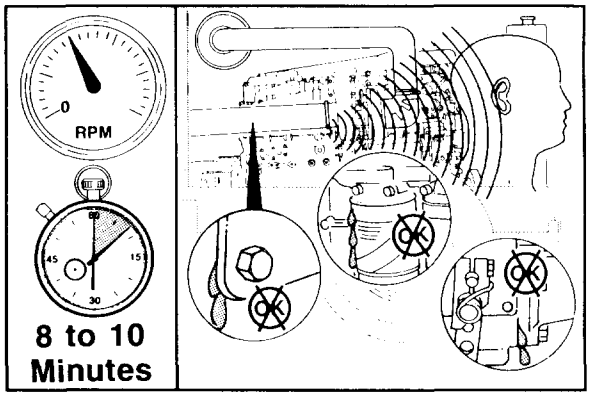

SECTION 10 - Engine Component Specifications
Table of Contents

	Reference No.	Page No.
General Information	10-01	2
Conversion Factors	10-02	3
Pipe Plug Torque Values	10-03	4
Capscrew Markings and Torque Values	10-04	4
Decimal and Metric Equivalents	10-05	6
Cooling System Torque Values	10-06	7
Lubricating Oil System Torque Values	10-07	9
Combustion Air System Torque Values	10-08	11
Compressed Air System Torque Values	10-09	14
Fuel System Torque Values	10-10	16
Electrical System Torque Values	10-11	18
Base Engine Components Torque Values	10-12	19

General Information - (10-01)

This section contains the engine and component specifications used in this manual, separated by systems in the same sequence they appear in the manual. A procedure number will appear with each component description to aid in locating illustrations that describe inspection procedures. Component capscrew installation torques will follow the specifications in each systems section.

Specifications for parts and components that are **not** discussed in this manual can be found in the following publications:

Title of Publication	Bulletin No.
Fuel Pump Rebuild Manual	3379084
Injector Rebuild Manual	3379071
NT Engine Shop Manual	3379076
Single Cylinder Air Compressor Shop Manual	3810242
Turbocharger Rebuild Manual (H2B, H2C, and HC3)	3379461

Refer to Section 12 for literature ordering information.

Conversion Factors - (10-02)

QUANTITY	U.S. CUSTOMARY		METRIC		FROM U.S. CUSTOMARY TO METRIC MULTIPLY BY	FROM METRIC TO U.S. CUSTOMARY MULTIPLY BY
	Unit Name	Abbr.	Unit Name	Abbr.		
Area	sq. inch	in^2	sq. millimeters	m^2	645.16	0.001550
Force	pounds force	lbf	Newton	N	4.4482	0.224809
Length	inch	in	millimeters	mm	25.40	0.039370
Pressure	pounds force per sq. in	psi	kilopascal	kPa	6.8948	0.145037
	inches of mercury	in Hg	kilopascal	kPa	3.3769	0.29613
	inches of water	in H2O	kilopascal	kPa	0.2488	4.019299
	inches of mercury	in Hg	millimeters of mercury	mm Hg	25.40	0.039370
	inches of water	in H2O	millimeters of water	mm H2O	25.40	0.039370
Torque	pound force per foot	lb ft	Newton-meter	N•m	1.35582	0.737562
	pound force per inch	lb in	Newton-meter	N•m	0.113	8.850756
Volume: liquid displacement	gallon (U.S.)	gal.	litre	1	3.7853	0.264179
	gallon (Imp*)	gal.	litre	1	4.546	0.219976
	cubic inch	in^3	litre	1	0.01639	61.02545
Weight (mass)	pounds (avoir.)	lb	kilograms	kg	0.4536	2.204623

* British measurement

Pipe Plug Torque Values - (10-03)

Size			Torque		Torque	
Thread	Actual Thread O.D.		In Aluminum Components		In Cast Iron or Steel Components	
in	mm	[in]	N•m	[ft-lbs]	N•m	[ft-lbs]
1/16	8.1	[0.32]	5	[45 in-lbs]	15	[10]
1/8	10.4	[0.41]	15	[10]	20	[15]
1/4	13.7	[0.54]	20	[15]	25	[20]
3/8	17.3	[0.68]	25	[20]	35	[25]
1/2	21.6	[0.85]	35	[25]	55	[40]
3/4	26.7	[1.05]	45	[35]	75	[55]
1	33.5	[1.32]	60	[45]	95	[70]
1-1/4	42.2	[1.66]	75	[55]	115	[85]
1-1/2	48.3	[1.90]	85	[65]	135	[100]

Capscrew Markings and Torque Values - (10-04)

Caution: When replacing capscrews, always use a capscrew of the same measurement and strength as the capscrew being replaced. Using incorrect capscrews can result in engine damage.

SAE capscrews are graded according to the strength of the capscrew. They are marked on the head so the correct strength and torque value are known.

The table on the following page lists the capscrew markings and the correct value for the capscrew. SAE capscrews are identified by:

U.S. Customary (5/16 X 18 X 1 1/2)		
5/16	**18**	**1 1/2**
Major Thread Diameter in Inches	Number Threads per Inch	Length in Inches

Notes:

1. Always use the torque values listed on page 5 when specific torque values are **not** available.
2. Do **not** use the torque values in place of those specified in other sections of this manual. It is important to use the correct torque values for SAE grade 5 and 8 capscrews.
3. The torque values in the table are based on the use of lubricated threads.

Capscrew Markings and Torque Values - (10-04) (Continued)

Capscrew Markings and Torque Values - U.S. Customary		
SAE Grade Number	5	8
	Capscrew Head Markings These are all SAE Grade 5 (3) line	
		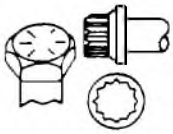

	Capscrew Torque - Grade 5 Capscrew				Capscrew Torque - Grade 8 Capscrew			
Capscrew Body Size	Cast Iron		Aluminum		Cast Iron		Aluminum	
(Inches) - (Thread)	N•m	ft-lb	N•m	ft-lb	N•m	ft-lb	N•m	ft-lb
1/4 - 20	9	7	8	6	15	11	12	9
- 28	12	9	9	7	18	13	14	10
5/16 - 18	20	15	16	12	30	22	24	18
- 24	23	17	19	14	33	24	25	19
3/8 - 16	40	30	25	20	55	40	40	30
- 24	40	30	35	25	60	45	45	35
7/16 - 14	60	45	45	35	90	65	65	50
- 20	65	50	55	40	95	70	75	55
1/2 - 13	95	70	75	55	130	95	100	75
- 20	100	75	80	60	150	110	120	90
9/16 - 12	135	100	110	80	190	140	150	110
- 18	150	110	115	85	210	155	170	125
5/8 - 11	180	135	150	110	255	190	205	150
- 18	210	155	160	120	290	215	230	170
3/4 - 10	325	240	255	190	460	340	365	270
- 16	365	270	285	210	515	380	410	300
7/8 - 9	490	360	380	280	745	550	600	440
- 14	530	390	420	310	825	610	660	490
1 - 8	720	530	570	420	1100	820	890	660
- 14	800	590	650	480	1200	890	960	710

Refer to the notes on page 4.

Decimal and Metric Equivalents - (10-05)

Metric mm	Decimal in.	Fractions	Metric mm	Decimal in.	Fractions
0.39688	0.015625	1/64	13.09687	0.515625	33/64
0.79375	0.03125	1/32	13.49375	0.53125	17/32
1.19062	0.046875	3/64	13.89062	0.546875	35/64
1.58750	0.0625	1/16	14.28750	0.5625	9/16
1.98437	0.078125	5/64	14.68437	0.578125	37/64
2.38125	0.09375	3/32	15.08125	0.59375	19/32
2.77812	0.109375	7/64	15.47812	0.609375	39/64
3.1750	0.125	1/8	15.87500	0.625	5/8
3.57187	0.140625	9/64	16.27187	0.640625	41/64
3.96875	0.15625	5/32	16.66875	0.65625	21/32
4.36562	0.171875	11/64	17.06562	0.671875	43/64
4.76250	0.1875	3/16	17.46250	0.6875	11/16
5.15937	0.203125	13/64	17.85937	0.703125	45/64
5.55625	0.21875	7/32	18.25625	0.71875	23/32
5.95312	0.234375	15/64	18.65312	0.734375	47/64
6.35000	0.250	1/4	19.05000	0.750	3/4
6.74687	0.265625	17/64	19.44687	0.765625	49/64
7.14375	0.28125	9/32	19.84375	0.78125	25/32
7.54062	0.296875	19/64	20.24062	0.796875	51/64
7.93750	0.3125	5/16	20.63750	0.8125	13/16
8.33437	0.328125	21/64	21.03437	0.828125	53/64
8.73125	0.34375	11/32	21.43125	0.84375	27/32
9.12812	0.359375	23/64	21.82812	0.859375	55/64
9.52500	0.375	3/8	22.22500	0.875	7/8
9.92187	0.390625	25/64	22.62187	0.890625	57/64
10.31875	0.40625	13/32	23.01875	0.90625	29/32
10.71562	0.421875	27/64	23.41562	0.921875	59/64
11.11250	0.4375	7/16	23.81250	0.9375	15/16
11.50937	0.453125	29/64	24.20937	0.953125	61/64
11.90625	0.46875	15/32	24.60625	0.96875	31/32
12.30312	0.484375	31/64	25.00312	0.984375	63/64
12.70000	0.500	1/2	25.40000	1.00	1

Cooling System Torque Values - (10-06)

Component	Procedure No.	Torque N•m [ft-lbs]
Fan Clutch - Mounting Capscrews or Nuts (3/8-inch)	1-25	45
Fan Hub - Mounting Capscrews	1-21	110 [80]
Fan Hub Support - Mounting Capscrews	1-28	100 [75]
Hose Clamps (Worm Type)		5 [40 in-lbs]
Idler Pulley Shaft - Lock Nut	1-19	70 [50]
Thermostat Housing Cover - Mounting Capscrews (Big Cam IV)	1-36	45 [35]
Thermostat Housing - Mounting Capscrews (Big Cam III)	1-30	45 [35]
(Big Cam IV)	1-35	45 [35]
Water Filter Head - Insert (Big Cam IV)	1-40	45 [35]
Water Manifold - Mounting Capscrews	1-43	45 [35]
Water Pump - Mounting Capscrews	1-28	45 [35]
Water Transfer Tube - Mounting Capscrews (Big Cam III)	1-28	45 [35]
Water Transfer Cover - Mounting Capscrews (Big Cam IV)	1-35	25 [20]

Water Pump Belt (Refer to Procedure 1-19)

N•m	Belt Tension	lbs
200 - 220	New Belt	150 -160
95 - 165	Used Belt	70 - 120

Fan Drive Belt (Refer to Procedure 1-20)

N•m	Belt Tension	lbs
580 - 670	New Belt	130 -150
360 - 540	Used Belt	80 - 120

Fan Drive - Viscous (Refer to Procedure 1-25)

Operating Temperature Range	
Start Modulation	**Maximum Speed**
85°C [185°F]	93°C [200°F]

Fan Hub (Refer to Procedure 1-26)

End Clearance		
mm		in
0.08	MIN	0.003
0.25	MAX	0.010

Thermostat - Operating Temperature Range - Traditional Aftercooled Engines (Big Cam III) (Refer to Procedure 1-31)

Nominal Setting		Fully Open		Start to Open					
°C	°F	°C	Min	°F	°C	Max	°F	°C	°F
71	160	70		158	72		162	83	182
77	170	76		168	78		172	89	192
79	175	78		173	80		177	92	197
82	180	81		178	83		182	94	202
85	185	84		183	86		187	97	207
Full Open Space between Seal Sleeve and Cross Section 9.50 mm [0.375-in]									

Radiator Thermostat - Operating Temperature Range - Optimized Aftercooled Engines (Big Cam IV) (Refer to Procedure 1-33)

Normal Position	Start to Open						Fully Open					
	°C	Min	°F	°C	Max	°F	°C	Min	°F	°C	Max	°F
Closed	77		171	80		175	89		193	92		197

NOTE: The thermostat operating temperature **must** be checked with the thermostat installed in the engine. Refer to Procedure 1-33.

Bypass Thermostat - Operating Temperature Range - Optimized Aftercooled Engines (Big Cam IV) (Refer to Procedure 1-34)

Normal Position	Fully Closed Temperature					
	°C	Min	°F	°C	Max	°F
Open	84		183	86		187

NOTE: The thermostat operating temperature **must** be checked with the thermostat installed in the engine. Refer to Procedure 1-34.

Lubricating Oil System Torque Values - (10-07)

Component	Procedure No.	Torque N•m [ft-lbs]
Crankcase Breather Tube Bracket Capscrews	**2-12**	**25 [20]**
DFC Signal Line		
Dipstick and Filler Tube Housing Mounting	2-25	15 [120 in-lbs]
Capscrews	2-13	45 [35]
Hose Clamps		5 [40 in-lbs]
Main Oil Pressure Regulator Retainer Plug Capscrew	2-22	25 [20]
Oil Cooler Brace to Cylinder Block Mounting Capscrews	2-19	10 [8]
Oil Cooler Bypass Valve Mounting Capscrews	2-17	40 [30]
Oil Cooler Housing to Support Capscrews	2-20	45 [35]
Oil Cooler Support Mounting Capscrews	2-19	45 [35]
Oil Cooler Water Transfer Tube Retaining Clip Capscrews	2-19	25 [20]
Oil Filter Head Mounting Capscrews (Bypass Filter)	2-19	45 [35]
Oil Filter Restriction Signal Sending Unit Mounting Capscrews	2-20	15 [120 in-lbs]
Oil Pan Drain Plug	2-09	90 [65]
Oil Pan Mounting Capscrews 7/16	2-16	70 [50]
Oil Pan Mounting Capscrews 5/16	2-16	25 [20]
Oil Pump Cover to Body Capscrews	2-24	25 [20]
Oil Pump Mounting Capscrews	2-25	55 [40]
Oil Transfer Tube Mounting Capscrews	2-15	45 [35]
Power Steering Pump Drive Cover Plate Mounting Capscrews	2-25	25 [20]

Main Oil Pressure Regulator (Refer to Procedure 2-22)

Spring Free Length			Spring (A) Load at 46.23 mm [1.820 in.]		
mm		**in**	**N•m**		**lbs**
84.1	(Approximate)	3.310	98	MIN	22
			116	MAX	26

Oil Pump (Refer to Procedure 2-25)

Drive Shaft End Clearance		
mm		**in**
0.050	MIN	0.002
0.203	MAX	0.008

High Oil Pressure Relief Valve (Refer to Procedure 2-27)

Plug Installed Depth			Relief Valve Bore Depth			Spring Tension at 29 mm [1.145 in.] Height		
mm		in	mm		in	N•m		lbs
6.48	MIN	0.255	45.72	MIN	1.800	260	MIN	59
6.98	MAX	0.275	46.74	MAX	1.840	320	MAX	72

Combustion Air System Torque Values - (10-08)

Component	Procedure No.	Torque N•m [ft-lbs]
Aftercooler Air Inlet Hose Clamps	**3-13**	**8 [72 in-lbs]**
Aftercooler Coolant Inlet and Outlet Hose Clamps	3-16	5 [40 in-lbs]
Aftercooler Core Support Capscrews or Studs (Big Cam IV)	3-16	40 [30]
Aftercooler Core Support Capscrews or Studs (Big Cam III)	3-16	35 [25]
Aftercooler Cover to Housing Capscrews (Big Cam III)	3-16	35 [25]
Aftercooler Mounting Capscrews (Big Cam III)	3-16	35 [25]
Aftercooler Mounting Capscrews (Big Cam IV)	3-16	70 [50]
Aftercooler Water Inlet Connection Mounting Capscrews (Big Cam III)	3-16	40 [30]
Aftercooler Water Outlet Connection Mounting Capscrews (Big Cam III)	3-16	30 [20]
Exhaust Manifold Mounting Capscrews	3-15	80 [60]
Exhaust Pipe Clamps	3-13	8 [72 in-lbs]
Flange-type Fitting (Capscrews)	3-13	44 [32]
Intake Air Pipe Clamps	3-13	8 [72 in-lbs]
Turbocharger Mounting Nuts	3-12	65 [45]
Turbocharger Oil Drain Tube-type Fitting	3-13	80 [60]
Turbocharger Oil Supply Hose		
Flange-type (Capscrews)	3-13	44 [32]
Swivel Nut-type	3-13	30 [22]
Turbocharger Oil Supply Line Bracket Capscrews	3-14	7 [60 in-lbs]

Intake Air Restriction (Refer to Procedure 3-08)

Maximum 635 mm H_2O [25.0 in. H_2O]

Exhaust Air Restriction (Refer to Procedure 3-09)

Maximum 1016 mm H_2O [40.0 in. H_2O]

Turbocharger Turbine Housing V-Band or Capscrew Torque (Refer to Procedure 3-10)

Turbocharger T46B	V-Band 4 N•m [34 in-lb]	Capscrew NA
HT3B	13.5 N•m [120 in-lb]	NA
HT4B	16 N•m [144 in-lb]	NA
HC3	13.5 N•m [120 in-lb]	NA
T18A	NA	12 N•m [105 in-lb]

Turbocharger Compressor Housing V-Band or Capscrew Torque (Refer to Procedure 3-10)

Turbocharger T46B	V-Band 4 N•m [34 in-lb]	Capscrew NA
HT3B	NA	8 N•m [70 in-lb]
HT4B	14 N•m [120 in-lb]	NA
HC3	7 N•m [60 in-lb]	NA
T18A	5.5 N•m [50 in-lb]	NA

Turbocharger (Refer to Procedure 3-12)

Turbocharger	Radial Clearance (side to side) Dimension	
Model No.	**Minimum**	**Maximum**
T46B		
• Compressor Impeller	0.15 mm [0.006 in.]	0.45 mm [0.018 in.]
• Turbine Wheel	0.20 mm [0.008 in.]	1.09 mm [0.043 in.]
HT3B		
• Compressor Impeller	0.15 mm [0.006 in.]	0.45 mm [0.018 in.]
• Turbine Wheel	0.20 mm [0.008 in.]	0.53 mm [0.021 in.]
HT4B		
• Compressor Impeller	0.15 mm [0.006 in.]	0.46 mm [0.018 in.]
• Turbine Wheel	0.20 mm [0.008 in.]	0.53 mm [0.021 in.]
HC3		
• Compressor Impeller	0.20 mm [0.008 in.]	0.41 mm [0.016 in.]
• Turbine Wheel	0.28 mm [0.011 in.]	0.48 mm [0.019 in.]
T18A*		
• Compressor Impeller and Turbine Wheel	0.20 mm [0.008 in.]	0.45 mm [0.18 in.]

*Radial clearance on T18A **must** be measured with the dial indicator through the turbocharger oil drain hole.

Turbocharger	Radial Clearance (side to side) Dimension

Turbocharger Model No.	Axial Clearance (end to end) Dimension Minimum	Maximum
T46B	0.15 mm [0.006 in.]	0.35 mm [0.014 in.]
HT3B	0.03 mm [0.001 in.]	0.10 mm [0.004 in.]
HT4B	0.05 mm [0.002 in.]	0.13 mm [0.005 in.]
HC3	0.03 mm [0.001 in.]	0.10 mm [0.004 in.]
T18A	0.10 mm [0.004 in.]	0.23 mm [0.009 in.]

Compressed Air System Torque Values - (10-09)

Component	Procedure No.	Torque N•m [ft-lbs]
Air Compressor Mounting Capscrews	**4-12**	**65 [50]**
Air Compressor Support Bracket Mounting Capscrews	4-12	45 [35]
Air Compressor (Single Cylinder) Cylinder Head Capscrews	4-11	Step a. 7 [60 in-lbs]
		Step b. 15 [10]
		Step c. 20 [15]
		Step d. 25 [20]
Air Compressor (Two Cylinder) Cylinder Head Capscrews	4-11	Step a. 15 [10]
		Step b. 25 [20]
		Step c. 40 [30]
Unloader Body Capscrews	4-11	15 [120 in-lbs]

Air Compressor Exhaust Valve (Refer to Procedure 4-05)

Seating Surface Contact Area	Seat Height			Valve Flatness		
	mm		in	mm		in
Minimum 100%	12.32	MIN	0.485	0.03	MIN	0.001

Air Compressor Intake Valve (Refer to Procedure 4-05)

Seating Surface Contact Area	Seat Height			Valve Flatness		
	mm		in	mm		in
Minimum 100%	6.86	MIN	0.270	0.03	MIN	0.001

Compressor Spring Force Specifications

Spring Part Number

Approx. Free Length mm [inch]

Number of Coils

Wire Diameter mm [inch]

Force Measurement Length

Minimum N kg [lb.]

Maximum N kg [lb.]

128080
Exhaust Valve
17.02 [0.670]
3.0
2.03 [0.080]
7.11 [0.280]
35.6
3.63 [8.00]
46.3
4.72 [10.40]
190334
Intake Valve
12.70 [0.500]
2.8
1.58 [0.062]
7.11 [0.280]
3.45
0.25 [0.55]
4.89
0.50 [1.10]
150631
Unloading Valve (naturally aspirated)
41.91 [1.650]
11.5
2.03 [0.080]
24.89 [0.980]
133.4
13.6 [30.00]
169.0
17.23[38.00]
217557
Unloading Valve (turbocharged up to 1270 mm Hg [50 in Hg])
41.91 [1.650]
12.0
1.83 [0.072]
24.89 [0.980]
75.6

7.72 [17.00]

97.9

9.98 [22.00]
3003101

Unloading Valve
(all turbocharged

engines)
41.91 [1.650]
10.8
2.89 [0.065]
24.89 [0.980]

53.4

5.4 [12.00]

75.6

7.72 [17.00]

Fuel System Torque Values - (10-10)

Component	Procedure No.	Torque N•m [ft-lbs]
AFC No-Air Screw Lock Nut	**5-05**	**5 [40 in-lbs]**
Fuel Pump Mounting Capscrews	5-07	45 [35]
Fuel Pump Priming Hole Plug	5-11	30 [20]
Gear Pump Check Valve Jam Nut	5-08	6 [50 in-lbs]
Injector Hold Down Capscrews	5-06	Step a. 6 [50 in-lbs]
		Step b. 12 [100 in-lbs]
		Step c. 18 [156 in-lbs]
VS Governor Throttle Stop Set Screw	5-09	7 [60 in-lbs]

Engine Low Idle Speed (Refer to Procedure 5-05)

RPM	
MIN	**MAX**
650	725

Fuel Pump Throttle Lever (Refer to Procedure 5-07)

Breakover		
mm		**in**
3.18	MIN	0.125
6.35	MAX	0.250

Fuel Filter (Refer to Procedure 5-15)

Maximum Restriction		
	mm-Hg	**in-Hg**
Clean Filter	102	4
Dirty Filter	203	8

Fuel Drain Line (Refer to Procedure 5-15)

Maximum Restriction		
	mm-Hg	**in-Hg**
Without Check Valves	64	2.5
With Check Valves	165	6.5

Throttle Response (Refer to Procedure 5-18)

Maximum Time Limit
3.5 Seconds

Electrical System Torque Values - (10-11)

Component	Procedure No.	Capscrew Size	Threads/Inch	Torque
Alternator Adjusting Link Capscrew	**6-07**	**5/16**	**18**	**20 N•m [15 ft-lbs]**
(Grade 5 or Higher)		7/16	14	35 N•m [25 ft-lbs]
		1/2	13	65 N•m [50 ft-lbs]
Alternator Mounting Capscrew and Lock Nut	6-07	3/8	16	40 N•m [30 ft-lbs]
(Grade 5 or Higher)		7/16	20	90 N•m [65 ft-lbs]
		1/2	13	110 N•m [80 ft-lbs]
Starting Motor Mounting Capscrews	6-11			175 N•m [130 ft-lbs]

Batteries (Refer to Procedure 6-04)

Specific Gravity at 27°C [80°F]	State of Charge
1.260 - 1.280	**100%**
1.230 - 1.250	75%
1.200 - 1.220	50%
1.170 - 1.190	25%
1.110 - 1.130	Discharged

Alternator Belt (Refer to Procedure 6-07)

Belt Tension (New Belt)

Newtons		lbs
580	MIN	130
670	MAX	150

Belt Tension (Used Belt)

Newtons		lbs
360	MIN	80
530	MAX	120

Base Engine Components Torque Values - (10-12)

Component	Procedure No.	Torque N•m [ft-lbs]
Accessory Drive Mounting Capscrews	**7-28**	**60 [45]**
Accessory Drive Pulley Retaining Nut	7-25	420 [310]
Air Crossover Connection Capscrews (Big Cam III)	7-03	35 [25]
Cam Follower Assembly Mounting Capscrews	7-13 and 7-15	45 [35]
Camshaft Support Thrust Bearing	7-32	25 [20]
Connecting Rod Capscrews	7-21 and 7-22	Step a. 100 [75]
		Step b. 230 [170]
Crosshead Adjusting Screw Lock Nut	7-04	40 [30]
With Part No. ST-669 Adapter		35 [25]
Jacobs Brake Model 401 Crosshead Adjusting Screw		
Without ST-669 Adapter		35 [25]
With ST-669 Adapter		30 [22]
Cylinder Head Mounting Capscrews	7-11	Step a. 35 [25]
		Step b. 135 [100]
		Step c. 385 [285]
Engine Lifting Bracket Capscrews	7-04	80 [60]
Flywheel Housing Mounting Capscrews	7-41	205 [150]
Flywheel Mounting Capscrews	7-39	270 [200]
Front Engine Support Bracket Mounting Capscrews	7-33	70 [50]
Gear Cover Mounting Capscrews	7-34	70 [50]
Hose Clamps:		
T-Bolt Type	--	8 [70 in-lbs]
Worn Screw Type	--	5 [40 in-lbs]
Injector Adjusting Screw Lock Nut	7-04	60 [45]
With Part No. ST-669 Adapter		35 [45]
Injector Hold Down Clamps	7-04	18 [156 in-lbs]
Jacobs Brake Assembly Hold Down Nuts	7-07	80 [60]
Jacobs Brake Slave Piston Adjusting Screw Lock Nut	7-05	35 [25]
With Part No. ST-669 Adapter		30 [22]
Main Bearing Cap Capscrews (3/4-inch Diameter)	7-20	Step a. 120 [90]
		Step b. 230 [170]
		Step c. 345 [255]
		Step d. Loosen completely
		Step e. Repeat a. thru c.
Main Bearing Cap Capscrews (1-inch Diameter)	7-20	Step a. 150 [110]
		Step b. 285 [210]
		Step c. 415 [305]
		Step d. Loosen completely
		Step e. Repeat a. through c.
Mechanical Variable Timing (MVT) Actuator Cap	7-15 and 7-18	40 [30]
MVT Actuator Housing Mounting Capscrews	7-15	25 [20]
MVT Actuator Shaft Retaining Capscrew	7-14 and 7-15	60 [45]
MVT Air Filter	7-15	3 [25 in-lbs]
MVT Air Filter Elbow	7-15	3 [25 in-lbs]
MVT Air Solenoid Valve Jam Nut	7-15	5 [45 in-lbs]
MVT Eccentric Set Screw	7-15	70 [50]
Component	Procedure No.	Torque N•m [ft-lbs]
MVT Spring Retainer Lock Nut	7-14	45 [35]
Oil Pan Mounting Capscrews:		
5/16-inch Capscrews	7-34	25 [20]
7/16-inch Capscrews	7-34	70 [50]
Pipe Plug Torque Values	7-43	Refer to Chart
Piston Cooling Nozzle Mounting Capscrews:		
Hexagon Capscrews	7-19	15 [140 in-lbs]
Slotted Head Screws	7-19	10 [95 in-lbs]

Component	Procedure No.	Torque N•m [ft-lbs]
Accessory Drive Mounting Capscrews	**7-28**	**60 [45]**
Rear Crankshaft Seal Capscrews	7-40	45 [35]
Rocker Lever Cover Mounting Cap	7-02	20 [15]
Rocker Lever Housing Mounting Capscrews	7-10	80 [60]
Valve Adjusting Screw Lock Nut	7-04	60 [45]
With Part No. ST-669 Adapter		45 [35]
Vibration Damper	7-29	260 [190]

Crossheads, Valves, and Injectors — Adjust (Refer to Procedure 7-04)

Crosshead Clearance			Valve Clearance Intake			Valve Clearance Exhaust (Non-Top Stop Injectors)			Injector Plunger Travel (Top Stop Injector)			Injector Preload		
mm		in	mm		in	mm		in	mm		in	N•m		in-lbs
0.00	MAX	0.000	0.28	MAX	0.011	0.58	MAX	0.023	5.79	Big Cam	0.228	0.68	MAX	6
									5.71	NTE Big Cam	0.225			

Valve and Injector Adjustment Recheck Specifications*

Valve Clearance
Injector Plunger Travel
Injector Preload
Intake
Exhaust
(Non-Top Stop Injectors)
(Top Stop Injector)
mm
in
mm
in
mm
in
mm
in-lbs
0.10-0.36
[0.004-0.014]
0.46-0.71
[0.018-0.028]
Big Cam
0.05
[0.002] Lash
5.74-5.84 [0.226-0.230]
NTE Big Cam
5.66-5.76 [0.223-0.227]

***If adjustment is checked during troubleshooting or between the specified 96,000 kilometers [60,000 miles], 1500 hours, or one year service intervals, valve and injector adjustment should not** be performed if measurements are within the recheck specifications.

Jacobs Brake — Adjust (Refer to Procedure 7-05)

Slave Piston Clearance		
mm		in
0.46	MAX	0.018

Rocker Levers and Shafts (Refer to Procedure 7-09)

Bushing Bore I.D. (Installed)			Shaft O.D.			Side Clearance		
mm		in	mm		in	mm		in
28.562	MIN	1.1245	28.50	MIN	1.122	0.30	MIN	0.012
28.666	MAX	1.1286	28.55	MAX	1.124			

Cam Followers (Refer to Procedures 7-13 and 7-15)

Valve Roller Side Clearance			Injector Roller Side Clearance		
mm		in	mm		in
0.24	MIN	0.009	0.24	MIN	0.009
0.60	MAX	0.024	0.060	MAX	0.024

Cam Follower Lever Side Clearance (Installed)

Minimum 0.15 mm [0.006-inch]

Main Bearings (Refer to Procedure 7-20)

Main Bearing Thickness (Standard)		
mm		in
3.086	MIN	0.1215
3.145	MAX	0.1238

Crankshaft Thrust Bearing (Refer to Procedure 7-20)

Bearing Thickness (Standard)		
mm		in
6.223	MIN	0.2450
6.286	MAX	0.2475

Crankshaft End Clearance (Refer to Procedure 7-20)

End Clearance		
mm		in
0.18	MIN	0.007
0.56	MAX	0.022

Connecting Rod Bearings (Refer to Procedure 7-21)

Bearing Thickness (Standard)		
mm		in
2.362	MIN	0.0930
2.405	MAX	0.0947

Pistons (Refer to Procedure 7-22)

Pin Bore I.D.			Pin O.D.			Pin Length			Top Ring Gap		
mm		in	mm		in	mm		in	mm		in
50.762	MIN	1.9985	50.762	MIN	1.9985	119.56	MIN	4.707	0.43	MIN	0.017
50.800	MAX	2.000	50.775	MAX	1.9990	119.86	MAX	4.719	0.68	MAX	0.027

Intermediate Ring Gap Part No. 216983			Intermediate Ring Gap Part No. 214730 & 3012332			Oil Ring Gap		
mm		in	mm		in	mm		in
0.51	MIN	0.020	0.48	MIN	0.019	0.25	MIN	0.010
0.76	MAX	0.030	0.74	MAX	0.029	0.64	MAX	0.025

Connecting Rods (Refer to Procedure 7-23)

Crankshaft Bore I.D.			Piston Pin Bushing I.D.			Side Cap screw O.D.			Gap Clearance		
mm		in	mm		in	mm		in	mm		in
84.219	MIN	3.3157	50.825	MIN	2.0010	14.81	MIN	0.583	0.114	MIN	0.0045
84.244	MAX	3.3167	50.856	MAX	2.0022	14.99	MAX	0.590	0.330	MAX	0.0130

Cylinder Liner Counterbore (Refer to Procedure 7-24)

Counterbore Diameter and Depth (Standard)					
I.D.			Depth		
mm		in	mm		in
166.662	MIN	6.5615	8.89	MIN	0.350
166.713	MAX	6.5635	8.94	MAX	0.352

Cylinder Liners (Refer to Procedure 7-24)

I.D.			Top Press Fit O.D. (Standard Liner)			Top Press Fit O.D. (Oversize Liner)		
mm		in	mm		in	mm		in
139.694	MIN	5.4998	166.72	MIN	6.564	167.23	MIN	6.584
139.827	MAX	5.5050	166.77	MAX	6.566	167.28	MAX	6.586

Protrusion			Clearance to Cylinder Block at Lower Bore			Bore Out-of-Round*		
mm		in	mm		in	mm		in
0.08	MIN	0.003	0.05	MIN	0.002			
0.15	MAX	0.006	0.15	MAX	0.006	0.005	MAX	0.002
	c.*1 Inch Below Top of Liner					0.08	MAX	0.003

Vibration Damper (Refer to Procedure 7-29)

Eccentricity - Max. T.I.R. Per 25.4 mm [1.0 Inch] of Damper Diameter		Wobble - Max. T.I.R. Per 25.4 mm [1.0 Inch] of Damper Diameter		Viscous Damper Thickness Variation		
mm	in	mm	in	mm		in
0.10	0.004	0.18	0.007	0.25	MAX	0.010

Crankshaft Gear (Refer to Procedure 7-35)

Bore I.D.			Crankshaft Gear Journal O.D.		
mm		in	mm		in
95.394	MIN	3.7557	95.504	MIN	3.7600
95.415	MAX	3.7565	95.521	MAX	3.7607

Camshaft (Refer to Procedure 7-36)

Bushing Journals O.D.			End Clearance		
mm		in	mm		in
63.37	MIN	2.495	0.20	MIN	0.008
63.42	MAX	2.497	0.33	MAX	0.013

Gear Backlash (Refer to Procedure 7-36)

Backlash Between the Camshaft and the Crankshaft Gears			Backlash Between the Camshaft and the Accessory Drive Gear		
mm		in	mm		in
0.05	MIN	0.002	0.05	MIN	0.002
0.50	MAX	0.020	0.50	MAX	0.020

Camshaft Gear (Refer to Procedure 7-37)

Flanged Camshaft Design

Gear Bore I.D.			Camshaft Gear Journal O.D.			Thrust Plate Thickness		
mm		in	mm		in	mm		in
44.455	MIN	1.7502	44.526	MIN	1.7530	2.29	MIN	0.090
44.475	MAX	1.7510	44.539	MAX	1.7535	2.49	MAX	0.098

Flangeless Camshaft Design

Gear Bore I.D.			Camshaft Gear Journal O.D.			Thrust Plate Thickness		
mm		in	mm		in	mm		in
45.662	MIN	1.7977	45.733	MIN	1.8005	2.29	MIN	0.090
45.682	MAX	1.7985	45.745	MAX	1.8010	2.49	MAX	0.098

Camshaft Bushings (Refer to Procedure 7-38)

Cylinder Block Camshaft Bore I.D.			Bushing I.D. (Installed)		
mm		in	mm		in
68.237	MIN	2.6865	63.457	MIN	2.4983
68.262	MAX	2.6875	63.558	MAX	2.5023

Cylinder Block Camshaft Bore I.D.		Bushing I.D. (Installed)	
mm	in	mm	in

Flywheel (Refer to Procedure 7-39)

Flywheel Radius (Center to Outside Diameter of Flywheel)		Maximum T.I.R. of Flywheel Face (Measured at Maximum Radius of Flywheel)	
mm	in	mm	in
203	8	0.203	0.008
254	10	0.254	0.010
305	12	0.305	0.012
356	14	0.356	0.014
406	16	0.406	0.016

NOTE: If the T.I.R. can **not** be measured at the maximum radius of the flywheel, measure the distance from the center of the crankshaft to the dial indicator. Multiply the distance by 0.025 mm [0.001-inch] to determine the maximum allowable run out. The T.I.R. **must not** exceed 0.025 mm [0.001-inch] per inch of radius.

Maximum T.I.R. of Flywheel Bore	
mm	in
0.127	0.0050

Flywheel Housing (Refer to Procedure 7-41)

SAE No.	Flywheel Housing Bore and Face Runout			
	Bore I.D.		Maximum T.I.R.	
	mm	in	mm	in
00	788	31.0	0.31	0.012
0	648	25.5	0.25	0.010
1	511	20.0	0.20	0.008
2	448	17.6	0.20	0.008
3	410	16.1	0.20	0.008

Flywheel Housing Oversize Dowels (Refer to Procedure 7-42)

Oversize Dowel Pin O.D.			
Overall Dimension		Oversize	
mm	in	mm	in
13.08	0.515	0.38	0.015
13.46	0.530	0.76	0.030
13.84	0.545	1.14	0.045

Cup Plug Dimensions (Refer to Procedure 7-43)

Cylinder Head 3/4 O.D.			Cylinder Head 1.0 O.D.			Cylinder Head 1 1/4 O.D.		
mm		in	mm		in	mm		in
19.30	MIN	0.760	25.65	MIN	1.010	32.00	MIN	1.260
19.35	MAX	0.762	25.70	MAX	1.012	32.05	MAX	1.262

Cylinder Block 2 11/16 O.D.			Cam Follower Housing 3/4 O.D.		
mm		in	mm		in
68.45	MIN	2.695	19.17	MIN	0.755
68.55	MAX	2.699	19.27	MAX	0.759

Cylinder Head 3/4 O.D.		Cylinder Head 1.0 O.D.		Cylinder Head 1 1/4 O.D.	
mm	in	mm	in	mm	in

Cup Plug Bores (Refer to Procedure 7-43)

Cylinder Head 3/4 I.D.			Cylinder Head 1.0 I.D.			Cylinder Head 1 1/4 I.D.		
mm		in	mm		in	mm		in
19.037	MIN	0.7495	25.387	MIN	0.9995	31.737	MIN	1.2495
19.202	MAX	0.7560	25.527	MAX	1.0050	31.877	MAX	1.2550

Cylinder Block 2 11/16 I.D.			Cam Follower Housing 3/4 I.D.		
mm		in	mm		in
68.237	MIN	2.6865	19.02	MIN	0.749
68.262	MAX	2.6875	19.05	MAX	0.750

Index

	Section No.	Reference/ Procedure No.
Air Compressor		
- Air Governor - Check	4	4-08
- Air Governor and Compressor Unloader Valve - Check	4	4-07
- Carbon Buildup - Check	4	4-05
- Cylinder Head - Replace	4	4-11
- Gasket Leaks - Check	4	4-06
- Lubricating Oil Usage - Check	4	4-09
- Replace	4	4-12
- Unloader Valve - Check	4	4-10
Air Leaks		
- Combustion Air - Check	3	3-10
- Fuel Pump - Check	5	5-12
Accessory Drive		
- Pulley - Replace	7	7-25
- Pulley Wear Sleeve - Replace	7	7-26
- Replace	7	7-28
- Seal - Replace	7	7-27
Aftercooler		
- Filter Screen (Big Cam IV Only) - Clean	1	1-42
- Pressure Test	3	3-17
- Replace	3	3-16
Alternator		
- Belt - Adjust	6	6-07
- Output Test	6	6-08
- Replace	6	6-09
Batteries		
- Check	6	6-04
- Terminals - Check	6	6-05
Bearings		
- Main - Replace	7	7-20
- Thrust - Replace	7	7-20
Cam Followers		
- Fixed Injection Timing - Replace	7	7-13
- MVT Injection Timing - Replace	7	7-15
Camshaft		
- Bearing Support - Replace	7	7-32
- Bushings - Replace	7	7-38
- Gear - Replace	7	7-37
- Replace	7	7-36

	Section No.	Reference/ Procedure No.
Capscrew Markings and Torque Values	10	10-04
Chassis Dynamometer Operation	8	8-02
Cleaning Instructions - General	I	Page 10
Component Manufacturers	13	
Connecting Rods - Replace	7	7-23
Connecting Rod Bearings - Replace	7	7-21
Conversion Factors	10	10-02
Cooling System		
- Clean	1	1-10
- Coolant Filter - Replace	1	1-08
- Coolant Temperature Gauge - Check	1	1-14
- Drain	1	1-06
- Fill	1	1-07
- Hoses - Check	1	1-13
- Maintenance	1	1-05
- Pressure Test	1	1-12
- Test for Air	1	1-11
- Venting	1	1-04
Crankcase Breather and Tube - Replace	2	2-12
Crankshaft		
- Gear - Replace	7	7-35
- Pulley - Replace	7	7-30
- Seal (Front) - Replace	7	7-31
- Seal (Rear) - Replace	7	7-40
Crossheads - Adjust	7	7-04
Cup plugs - Replace	7	7-43
Cylinder Head		
- Gasket(s) - Replace	7	7-10
- Pressure Test	7	7-12
- Replace	7	7-11
Cylinder Liners - Replace	7	7-24
Cylinder Misfiring - Check	5	5-13
Decimal and Metric Equivalents	10	10-05
Definition of Terms	I	Page 8
Demand Flow and Cooling Lubrication System - Operation	2	2-02
Diesel Coolant Additives (DCA4)	1	1-09
Dipstick - Calibrate	2	2-14
Dipstick Tube and Housing - Replace	2	2-13

	Section No.	Reference/ Procedure No.
Engine		
- Cleaning Instructions	I	Page 10
- Component Specifications	10	10-06 - 10-12
- Diagrams	E	Page 5
- Driveability (Low Power) - Check List	5	Page 83
- Identification (Dataplate)	E	Page 2
- Internal Damage - Check	2	2-05
- Install	9	9-05
- Lifting Brackets	7	7-03
- Mounts - Inspect	9	9-04
- Repair Instructions	I	Page 9
- Remove	9	9-03
- Run-in Procedure		
Chassis Dynamometer	8	8-03
In-Chassis	8	8-04
- Support Bracket (Front) - Replace	7	7-33
Exhaust Restriction - Check	3	3-09
Exhaust Manifold - Replace	3	3-15
Fan		
- Pulley - Inspect	1	1-18
- Shroud - Inspect	1	1-18
- Spacer - Inspect	1	1-18
Fan Clutch		
- Air Engaged Type	1	1-22
- Air Disengaged Type	1	1-23
- On-Off Type - Check	1	1-21
- On-Off Type - Replace	1	1-24
Fan Clutch, Viscous Type	1	1-25
Fan Drive Belts - Replace	1	1-20
Fan Hub - Replace	1	1-26
Flow Diagrams		
- Combustion Air	3	3-03
- Compressed Air	4	4-03
- Cooling System	1	1-03
- Fuel System	5	5-03
- Lubricating Oil System	2	2-04
Flywheel - Replace	7	7-39

	Section No.	Reference/ Procedure No.
Flywheel Housing - Replace	7	7-41
Flywheel Housing Redowel to Cylinder Block	7	7-42
Fuel		
- Consumption - Check	5	5-16
- Consumption - Check List	5	Page 85
- Driveability (Low Power) - Check List	5	Page 83
- Line Restriction - Check	5	5-15
- Low Power Check	5	5-17
- Low Power Check List	5	Page 83
- Pump		
Adjust	5	5-05
Flow Check, Prime and Rotation	5	5-11
Replace	5	5-07
Throttle Response Time Check	5	5-18
- Shutoff Valve	5	5-10
- Specifications	5	5-02
- Stall Speed - Check List	5	Page 81
- Stall Speed and Time - Check	5	5-19
- System Maintenance	5	5-08
- Variable Speed Governor Leaking Fuel	5	5-09
Gear Cover - Replace	7	7-34
General Engine Test Specifications and Procedures	8	8-01
General Information		
- Base Engine Components	7	7-01
- Combustion Air System	3	3-01
- Compressed Air System	4	4-01
- Cooling System	1	1-01
- Electrical System	6	6-01
- Engine - Remove and Install	9	9-01
- Engine Component Specifications	10	10-01
- Fuel System	5	5-01
- Lubricating Oil System	2	2-01
Glossary (Definition of Terms)	I	Page 8
Head Gasket, Cylinder Liner, Crevice Seal, or Cylinder Block - Inspect for Coolant Leaks	1	1-48
Idler Pulley Assembly, Water Pump - Replace	1	1-27
Illustrations	I	Page 7
Injection Timing		
- Fixed	7	7-17
- General Information	7	7-16

	Section No.	Reference/ Procedure No.
- MVT	7	7-18
Injectors		
- Adjust	7	7-04
- Replace	5	5-06
Intake Air Restriction - Check	3	3-08
Jacobs Engine Brake		
- Adjust	7	7-05
- Check	7	7-06
- Replace	7	7-07
Literature Ordering		
- Form	12	Page 2
- Instructions and Publications	12	Page 1
- Locations	12	Page 3
Lubricating Oil		
- Cooler Assembly - Replace	2	2-19
- Cooler Bypass Valve - Check	2	2-17
- Cooler Core - Pressure Test	2	2-21
- Cooler Core - Replace	2	2-20
- Dilution with Fuel	5	5-14
- Dipstick - Calibrate	2	2-14
- Dipstick Tube and Housing - Replace	2	2-13
- Filter Head - Replace	2	2-18
- Filters (Full Flow and Bypass) - Replace	2	2-11
- High Oil Pressure Relief Valve - Check	2	2-26
- High Oil Pressure Relief Valve - Replace	2	2-27
- Internal Engine Damage - Check	2	2-05
- Leaks (External) - Check	2	2-06
- Pan		
Drain	2	2-09
Fill	2	2-10
Replace	2	2-16
- Pressure Gauge - Check	2	2-07
- Pressure (Main Regulator) - Replace	2	2-22
- Pump - Replace	2	2-25
- Pump Signal Line Orifice - Clean "In Chassis"	2	2-23
- Pump Signal Line Orifice - Clean "Pump Removed"	2	2-24
- Temperature Gauge - Check	2	2-08
- Transfer Tube - Replace	2	2-15
Manifold, Water, Sealing Ring Balance Orifices (Big Cam IV Only) - Replace	1	1-43

	Section No.	Reference/ Procedure No.
Manual Introduction and Use	I	Page 2
Mechanical Variable Timing (MVT) System	7	7-14
Pipe Plugs - Replace	7	7-43
Pipe Plug Torque Values	10	10-03
Piston Cooling Nozzles - Replace	7	7-19
Piston and Rings - Replace	7	7-22
Push Rods - Replace	7	7-08
Radiator		
- Baffle Leakage (Big Cam IV Only) - Check	1	1-44
- Check Valve Leakage (Big Cam IV Only) - Check	1	1-41
- Fins - Inspect	1	1-16
- Horizontal Flow - Check	1	1-46
- Pressure Cap - Check	1	1-15
- Three-Pass, Vertical-Flow - Check	1	1-47
- Two-Pass, Vertical-Flow - Check	1	1-45
Repair Instructions - General	I	Page 9
Rocker Levers/Rocker Lever Housings	7	7-09
Rocker Housing Covers - Replace	7	7-02
Service Tools		
- Base Engine Components	7	7-00
- Combustion Air	3	3-04
- Compressed Air	4	4-04
- Cooling System	1	1-00
- Electrical System	6	6-03
- Engine - Remove and Install	9	9-02
- Engine Testing (”In-Chassis”)	8	8-00
- Fuel System	5	5-04
- Lubricating Oil System	2	2-00
Shutter Operation - Check	1	1-17
Specifications		
- Components	10	10-06 - 10-12
- Combustion Air	3	3-02
- Compressed Air	4	4-02
- Cooling System	1	1-02
- Electrical System	6	6-02
- Engine Test	8	8-01
- Fuel System	5	5-02
- General Engine	E	Page 3
- Lubricating Oil System	2	2-03

	Section No.	Reference/ Procedure No.
Starting Circuit - Check	6	6-06
Starting Motor - Replace	6	6-10
Symbols	I	Page 3
Table of Contents		
- Base Engine Components	7	
- Combustion Air	3	
- Component Manufacturers	13	
- Compressed Air	4	
- Cooling System	1	
- Electrical System	6	
- Engine Component Specifications	10	
- Engine Identification	E	
- Engine - Remove and Install	9	
- Engine Test	8	
- Fuel System	5	
- Introduction	I	
- Literature Ordering	12	
- Lubricating Oil System	2	
- Troubleshooting	T	
Thermostat(s)		
- Big Cam III - Replace	1	1-30
- Big Cam IV - Replace	1	1-36
- Big Cam III - Test "Thermostat in Chassis"	1	1-29
- Big Cam III - Test "Thermostat Removed"	1	1-31
- Bypass (Big Cam IV) - Check	1	1-34
- Housing (Big Cam IV) - Replace	1	1-35
- Housing Check Valve Assembly (Big Cam IV) - Replace	1	1-40
- Housing Check Valve O-rings (Big Cam IV) - Replace	1	1-39
- Radiator (Big Cam IV) - Check	1	1-33
- Seal, Big Cam III - Replace	1	1-32
- Seat, Bypass (Big Cam IV) - Replace	1	1-37
- Seat, Radiator (Big Cam IV) - Replace	1	1-38
Troubleshooting		
- Charts	T	Page 3
- Procedures and Techniques	T	Page 1
- Symptoms List	T	Page 2
Turbocharger		
- Axial and Radial Clearance - Check	3	3-12
- Blade Damage - Check	3	3-11

	Section No.	Reference/ Procedure No.
- Check for Correct Installation	3	3-07
- Compressor Seal Leakage - Check	3	3-06
- Replace	3	3-13
- Series Turbocharger - Replace	3	3-14
- Turbine Seal Leaks - Check	3	3-05
Valves - Adjust	7	7-04
Vibration Damper	7	7-29
Water Pump - Replace	1	1-28
Water Pump Belt - Replace	1	1-19

Additional Service Literature

The following publications can be purchased by filling in and mailing the Service Literature Order Form:

Bulletin No.	Title of Publication	Price (U.S. $)*
3377550	Compuchek Operation Manual	N/A
3377971	Service Tools Catalog	7.50
3379001	Fuel for Cummins Engines	.65
3379009	Operation - Cold Weather	.65
3379035	Alternative Repair Manual	25.00
3379071	Injectors PT Rebuild Manual	9.00
3379076	NH/NT/NTA/855 C.I.D. Engine Shop Manual	14.00
3379084	Fuel Pump PT (Type G) Rebuild and Calibration Instructions	12.00
3379091	Turbochargers Rebuild Manual	7.25
3379133	Control Parts List	5.20
3379352	Fuel Pump PT (Type G) Calibration Values (1981 to Present)	12.00
3379461	Turbocharger Rebuild Manual (H2-B/HC3-1 Models)	7.25
3379682	NTC Big Cam III Automotive Parts Catalog	3.60
3387074	Analysis and Prevention of Bearing Failures	
	• Slides	12.00
	• Recall Book	4.00
3387266	Color Weather Operation	
	• Slides	32.00
	• Audio Tape	6.00
	• Recall Book	4.00
3810230	HT3B Turbocharger Shop Manual	7.25
3810238	Automotive Operation and Maintenance Manual - NT 855 (U.S.A., Canada, Australia, and New Zealand)	5.50
3810241	HT4B Turbocharger Shop Manual	7.25
3810242	Single Cylinder Air Compressor Shop Manual	7.25
3810249	Operation and Maintenance Manual - NT 855 International	5.50
3810257	ST677 Two Cylinder Air Compressor Shop Manual	7.25
3822016	NTCC Big Cam III Parts Catalog	3.60
3822017	NTC Big Cam IV Parts Catalog	3.60

* Current prices are in effect until January 1, 1987; after this date, contact your Cummins Distributor or Dealer for current pricing information.

Service Literature Order Form

Use this form for prompt handling of your literature order.

Bulletin Number	Literature Description	Quantity	U.S. Price Each*	Amount
			Subtotal	
		Indiana Residents add 5% sales tax		
			Total	

Service Literature Order Form

Use this form for prompt handling of your literature order.

Bulletin Number	Literature Description	Quantity	U.S. Price Each*	Amount
			Subtotal	
		Indiana Residents add 5% sales tax		
			Total	

Service Literature Ordering Location

Order service literature from your nearest regional location; refer to the addresses listed below:

Region	Ordering Location
United States and Canada	Literature Control Service 3400 Robards Court P.O. Box 34470 Louisville, Kentucky 40232-4470
U.K., Europe, Mid-East, Africa and Eastern European Countries	Cummins Daventry Royal Oak Way South Northants, England NN11 5 NU
South and Central America (excluding Brazil and Mexico)	Cummins Americas, Inc. 16085 Northwest 52nd Avenue Hialeah, Florida 33104
Brazil and Mexico	International Parts Order Dept. Cummins Engine Company Columbus, Indiana 47202 Mail Code 40931
Far East (excluding Australia and New Zealand)	Cummins Diesel Sales Corp. Literature Center 100-G Pasir Panjang Road Singapore 0511
Australia and New Zealand	Cummins Diesel Australia Maroondah Highway, P.O.B. 139 Ringwood 3134 Victoria, Australia

---

☐ Payment enclosed. Make certified check or money order payable to Cummins Engine Company, Inc.

From:

Name: _____

Street Address: _____

City: _____ State: _____ Zip Code: _____

Country: _____

Ship To: (Name and address where literature is to be shipped)

Name: _____

Street Address: _____

City: _____ State: _____ Zip Code: _____

Country: _____

COMPONENT MANUFACTURERS

UNITED STATES AND UNITED KINGDOM OFFICES

The following list contains addresses and phone numbers of suppliers of accessories used on Cummins engines. Suppliers may be contacted directly for any specifications **not** covered in this manual.

AIR CYLINDERS

Bendix Ltd.
Douglas Road
Kingswood
Bristol
England
Telephone: 0272-671781

Catching Engineering
2101 Roberts Drive
Broadview, IL 60153
Telephone: (312) 344-2334

AIR HEATERS

Fleetguard, Inc.
Route 8
Cookeville, TN 38501
Telephone: (615) 526-9551

Kim Hotstart Co.
West 917 Broadway
Spokane, WA 99210
Telephone: (509) 534-6171

AIR STARTERS

Ingersoll Rand
Chorley New Road
Horwich
Bolton
Lancashire
England
BL6 6JN
Telephone: 0204-65544

Ingersoll-Rand Engine
Starting Systems
651 Park Avenue
King of Prussia, PA 19406
Telephone: (215) 337-5900

ALTERNATORS

Robert Bosch Ltd.
P.O. Box 166
Rhodes Way
Watford
WD2 41B
England
Telephone: 0923-44233

Butec Electrics
Cleveland Road
Leyland
PR5 1XB
England
Telephone: 0744-21663

C.A.V. Electrical Equip.
P.O. Box 36
Warple Way
London
W3 7SS
England
Telephone: 01-743-3111

A.C. Delco Comp. Group
Civic Offices
Central Milton Keynes
MK9 3EL
England
Telephone: 0908-66001

Delco-Remy
P.O. Box 2439
Anderson, IN 46018
Telephone: (317) 646-7838

Leece-Neville Corp.
1374 E. 51st St.
Cleveland, OH 44013
Telephone: (216) 431-0740

BELTS

Dayco Rubber U.K.
Sheffield Street
Stockport
Cheshire
SK4 1RV
England
Telephone: 061-432-5163

BELTS (CONTINUED)

T.B.A. Ind. Products
P.O. Box 77
Wigan
Lancashire
WN2 4XQ
England
Telephone: 0942-59221

Dayco Corp.
Belt Technical Center
P.O. Box 3258
Springfield, MO 65804
Telephone: (417) 881-7440

Gates Rubber Company
5610 Crawfordsville Road
Suite 2002
Speedway, IN 46224
Telephone: (317) 248-0386

Goodyear Tire and
Rubber Company
49 South Franklin Road
Indianapolis, IN 46219
Telephone: (317) 898-4170

CLUTCHES

Twin Disc Intl. S.A.
Chaussee de Namur
Nivelles
Belgium
Telephone: 067-224941

Twin Disc Clutch Co.
Racine, WI 53403
Telephone: (414) 634-1981

COOLANT HEATERS

Fleetguard, Inc.
Route 8
Cookeville, TN 38501
Telephone: (615) 526-9551

DRIVE PLATES

Detroit Diesel Allison
Div. of General Motors
P.O. Box 894
Indianapolis, IN 46206
Telephone: (317) 244-1511

ELECTRIC STARTERS

Butec Electrics
Cleveland Road
Leyland
PR5 1XB
England
Telephone: 0744-21663

C.A.V. Electrical Equip.
P.O. Box 36
Warple Way
London
W3 7SS
England
Telephone: 01-743-3111

A.C. Delco Comp. Group
Civic Offices
Central Milton Keynes
MK9 3EL
England
Telephone: 0908-66001

Delco-Remy
P.O. Box 2439
Anderson, IN 46018
Telephone: (317) 646-7838

Leece-Neville Corp.
1374 E. 51st Street
Cleveland, OH 44013
Telephone: (216) 431-0740

FANS

Truflo Ltd.
Westwood Road
Birmingham
B6 7JF
England
Telephone: 021-327-4789

Hayes-Albion
1999 Wildwood Avenue
Jackson, MI 49202
Telephone: (517) 782-9421

FAN CLUTCHES

Holset Eng. Co. Ltd.
P.O. Box 9
Turnbridge
Huddersfield
England
Telephone: 0484-22244

FAN CLUTCHES (CONTINUED)

Rockford Division
Borg-Warner Corporation
1200 Windsor Road
P.O. Box 7007
Rockford, IL 61125-7007
Telephone: (815) 633-7460

FILTERS

Fleetguard
Cavalry Hill
Weedon
Northants
NN7 4PP
England
Telephone: 0327-41313

Fleetguard, Inc.
Route 8
Cookeville, TN 38501
Telephone: (615) 526-9551

FLEXPLATES

Corrugated Packing and
Sheet Metal
Hamsterley
Newcastle Upon Tyne
Telephone: 0207-560-505

Detroit Diesel Allison
Div. of General Motors
P.O. Box 894
Indianapolis, IN 46206
Telephone: (317) 244-1511

FUEL WARMERS

Fleetguard, Inc.
Route 8
Cookeville, TN 38501
Telephone: (615) 526-9551

GAUGES

Grasslin U.K. Ltd.
Vale Rise
Tonbridge
Kent
TN9 1TB
England
Telephone: 0732-359888

Icknield Instruments Ltd.
Jubilee Road
Letchworth
Herts
England
Telephone: 04626-5551

GAUGES (CONTINUED)

Superb Tool and
Gauge Co.
21 Princip Street
Birmingham
B4 61E
England
Telephone: 021-359-4876

Smiths Industries
50 Oxgate Lane
Cricklewood
London
NW2 7JB
England
Telephone: 01-452-3333

Kabi Elec. and Plastics
Cranborne Road
Potters Bar
Herts
EN6 3JP
England
Telephone: 0707-53444

Datcon Instrument Co.
P.O. Box 128
East Petersburg, PA 17520
Telephone: (717) 569-5713

Rochester Gauge of Texas
11637 Denton Drive
Dallas, TX 75229
Telephone: (214) 241-2161

GOVERNORS

Woodward Governors Ltd.
P.O. Box 15
663/664 Ajax Avenue
Slough
Bucks
SL1 4DD
England
Telephone: 0753-26835

Colman Nederland
Maalderij 30
1185 ZC Amstelveen
The Netherlands
Telephone: 020-455157

Woodward Governor Co.
1000 E. Drake Road
Fort Collins, CO 80522
Telephone: (303) 482-5811

Barber Colman Co.
1300 Rock Street
Rockford, IL 61101
Telephone: (815) 877-0241

GOVERNORS (CONTINUED)

United Technologies
Diesel Systems
1000 Jorie Blvd.
Oak Brook, IL 60521
Telephone: (312) 325-2020

HYDRAULIC AND POWER STEERING PUMPS

Hobourn Eaton Ltd.
Priory Road
Strood
Rochester
Kent
ME2 2BD
Telephone: 0634-77733

Sundstrand Hydratec Ltd.
Cheney Manor Trading
Estate
Swindon
Wiltshire
SN2 2PZ
England
Telephone: 0793-30101

Sperry Vickers
Washington Road
Oaklands House
Oaklands Drive
Sale
Greater Manchester
England
Telephone: 061-962-4646

Sperry Vickers
1401 Crooks Road
Troy, MI 48084
Telephone: None Available

OIL HEATERS

Fleetguard, Inc.
Route 8
Cookeville, TN 38501
Telephone: (615) 526-9551

Kim Hotstart Co.
West 917 Broadway
Spokane, WA 99210
Telephone: (509) 534-6171

SAFETY CONTROLS

Teddington Ind. Equip.
Windmill Road
Sunburn on Thames
Middlesex
TW16 7HF
England
Telephone: 09327-85500

SAFETY CONTROLS (CONTINUED)

The Nason Company
10388 Enterprise Drive
Davisburg, MI 48019
Telephone: (313) 625-5381

TORQUE CONVERTERS

Twin Disc Intl. S.A.
Chaussee de Namur
Nivelles
Belgium
Telephone: 067-224941

Twin Disc Clutch Co.
Racine, WI 53403
Telephone: (414) 634-1981

Rockford Division
Borg-Warner Corporation
1200 Windsor Road
P.O. Box 7007
Rockford, IL 61125-7007
Telephone: (815) 633-7460