MITSUBISHI MOTORS

Shop Manual

0C8222

diesel engine

6D2.8DC (for industrial use)

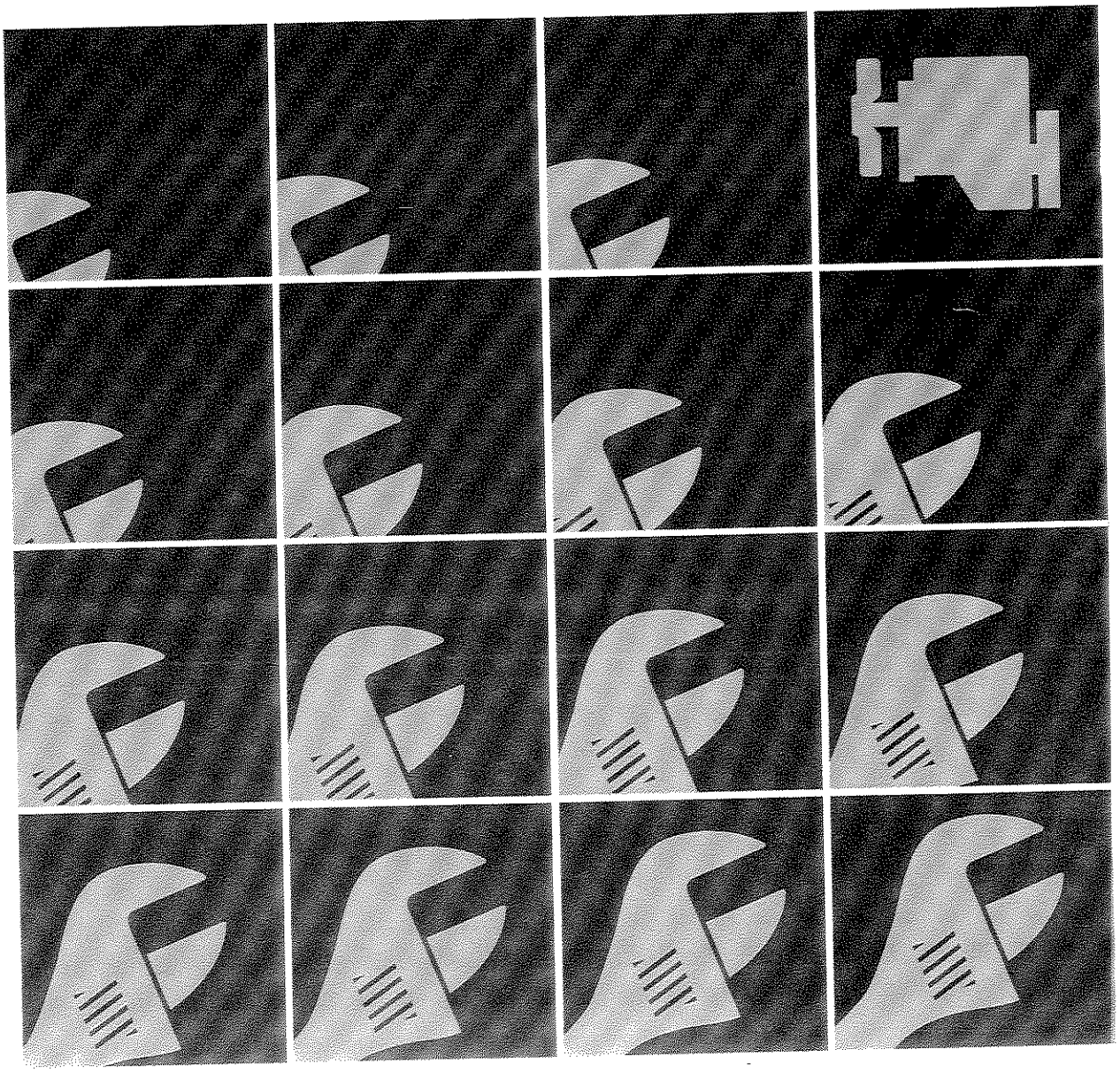

Pub. No. 97841-02010

6D2.8DC

diesel engine

Shop Manual

FOREWORD

This shop manual contains the specification, construction, operation, adjustment and service procedures of the Model 6D2. 8DC diesel engine for service mechanics engaged in servicing of the Mitsubishi diesel engines.
Please make the most of this shop manual to perform correct servicing and wasteless operations.
Note that some of the contents of this shop manual are subject to change owing to improvements, etc. that may be introduced after publication of this shop manual.

JULY 1995

Applicable Engine Models
- 6D22
- 6D22-T
- 6D22-TC
- 6D24-T
- 6D24-TC
- 8DC9
- 8DC9-T
- 8DC9-TC
- 8DC9-TL

GROUP INDEX

GENERAL 00
ENGINE <6D2> 11A
ENGINE <8DC> 11B
LUBRICATION 12
FUEL AND ENGINE CONTROL 13
COOLING 14
INTAKE AND EXHAUST 15
ENGINE ELECTRICAL 16
CLUTCH 21
SPECIAL EQUIPMENT 61

COMPILATION OF THIS MANUAL

CONTENTS

1. GROUP CLASSIFICATION 4
2. TERMS AND UNITS 5
3. CONVERSION TABLE FOR SI UNITS INTO FOOT-POUND UNITS 6
4. READING THE ILLUSTRATION 7

1. GROUP CLASSIFICATION

This manual is organized into several groups classified according to the engine basic elements.

No.	Group name	Description
00	General	External view, major specifications, engine outputs classified by application, engine numbers, caution plate, general precautions for servicing, general bolts and nuts tightening torque table
11A	Engine <6D2>	Engine proper (cylinder head, valve mechanism, camshaft, piston, crankshaft, timing gear, flywheel), specifications, service standards, special tools, troubleshooting
11B	Engine <8DC>	
12	Lubrication	Lubrication system (oil pump, oil filter, oil cooler), specifications, service standards, special tools, troubleshooting
13	Fuel and engine control	Fuel system (injection pump, injection nozzle, fuel filter, pump drive case, water separator), specifications, service standards, special tools, troubleshooting
14	Cooling	Cooling system (water pump, thermostat, radiator, cooling system cleaning procedures, fan), specifications, service standards, special tools, troubleshooting
15	Intake and exhaust	Air cleaner, turbocharger, aftercooler, specifications, service standards, special tools, troubleshooting
16	Engine electrical	Starter, alternator, preheating system, relays, automatic stop device, specifications, service standards, special tools, troubleshooting
21	Clutch	Clutch proper, bearing case, specifications, service standards, special tools, troubleshooting
61	Special equipment	Air compressor, pressure governor, specifications, service standards, special tools

NOTE:

Page number begins with 1 for each guoup.

2. TERMS AND UNITS

The following terms and units are used throughout the entire texts of this manual.

(1) Front and rear
The terms "front" is the fan side and "rear" the flywheel side of the engine.

(2) Right and left
The terms "right" and "left" shall be used to indicate the side as viewed from the flywheel side of the engine.

(3) Service standard terms

- Nominal value
  Shows the nominal dimensions, dimension of an individual part, standard clearance between parts in an assembly, or the standard performance of an assembly.
- Limit
  Shows the value of a part at which the part is no longer serviceable from the performance as well as strength viewpoints, requiring replacement or repair.

(4) Tightening torque
Over- or undertightening of bolts and nuts has critical effects on performance and functions. Tightening torque is therefore specified for some tightening points.
All tightening torque specifications may be considered as "dry" unless "wet" is specified.
Where no tightening torque is specified, use a torque value specified in the General Bolts and Nuts Tightening Torque Table.

(5) Units
Length, weight, surface area and capacity are given in International Systems of Units with metric units indicated in ( ).
Temperatures are given in degrees Celsius.
For the conversion into the foot-pound system, refer to the following conversion table.

3. CONVERSION TABLE FOR SI UNITS INTO FOOT-POUND UNITS

A system of units used in this manual is SI (International System of Units). When the units are converted to those used in the foot-pound system, use the following conversion table.

Unit	Sign of SI unit	Sign of foot-pound unit	Conversion rate
Mass quantity of matter	kg g	lb oz	1 kg = 2.2046 lb 1 g = 0.035274 oz
Dimension	m mm	ft. in.	1 m = 3.2808 ft. 1 mm = 0.03937 in.
Capacity	L cm^3 cm^3	gal. oz cu.in.	1 L = 0.2642 gal. (U.S.) 1 L = 0.220 gal. (Imp.) 1 cm^3 = 0.033814 oz (U.S.) 1 cm^3 = 0.035195 oz (Imp.) 1 cm^3 = 0.061023 cu.in.
Force	N (Newton)	lbf	1 N = 0.2248 lbf
Pressure	kPa (kilopascal)	lbf/in^2	1 kPa = 0.145 lbf/in^2 1 kPa = 0.2953 in.Hg
Stress	N/cm^2	lbf/in^2	1 N/cm^2 = 1.45 lbf/in^2
Moment of force	N·m	lbf.ft	1 N·m = 0.7375 lbf.ft
Output	kW (kilowatt)	HP	1 kW = 1.34 HP
Temperature	°C	°F	t°C = (1.8t°C + 32)°F

4. READING THE ILLUSTRATION

(Ex. 1: Disassembly and Inspection)

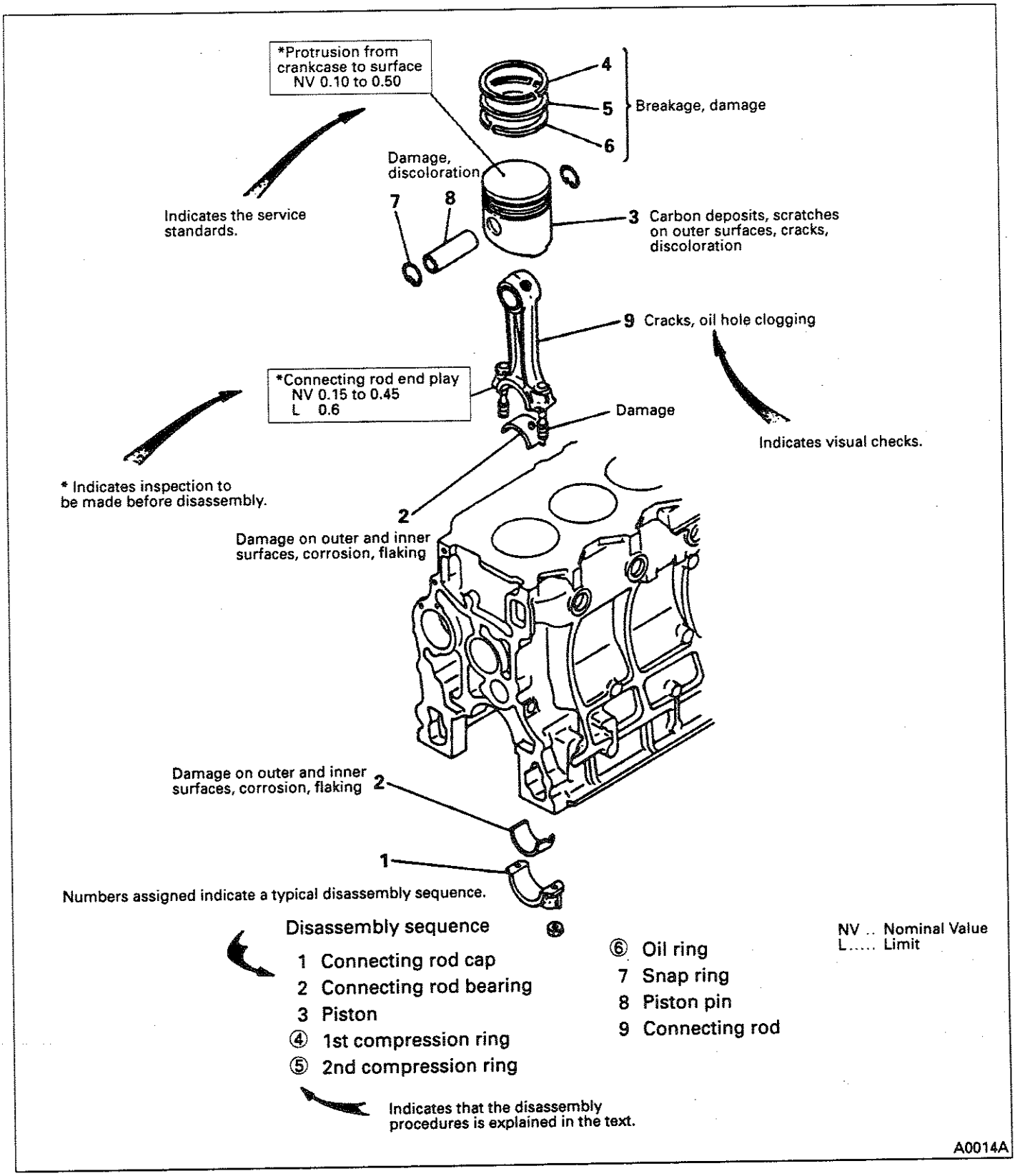

(Ex. 2: Reassembly)

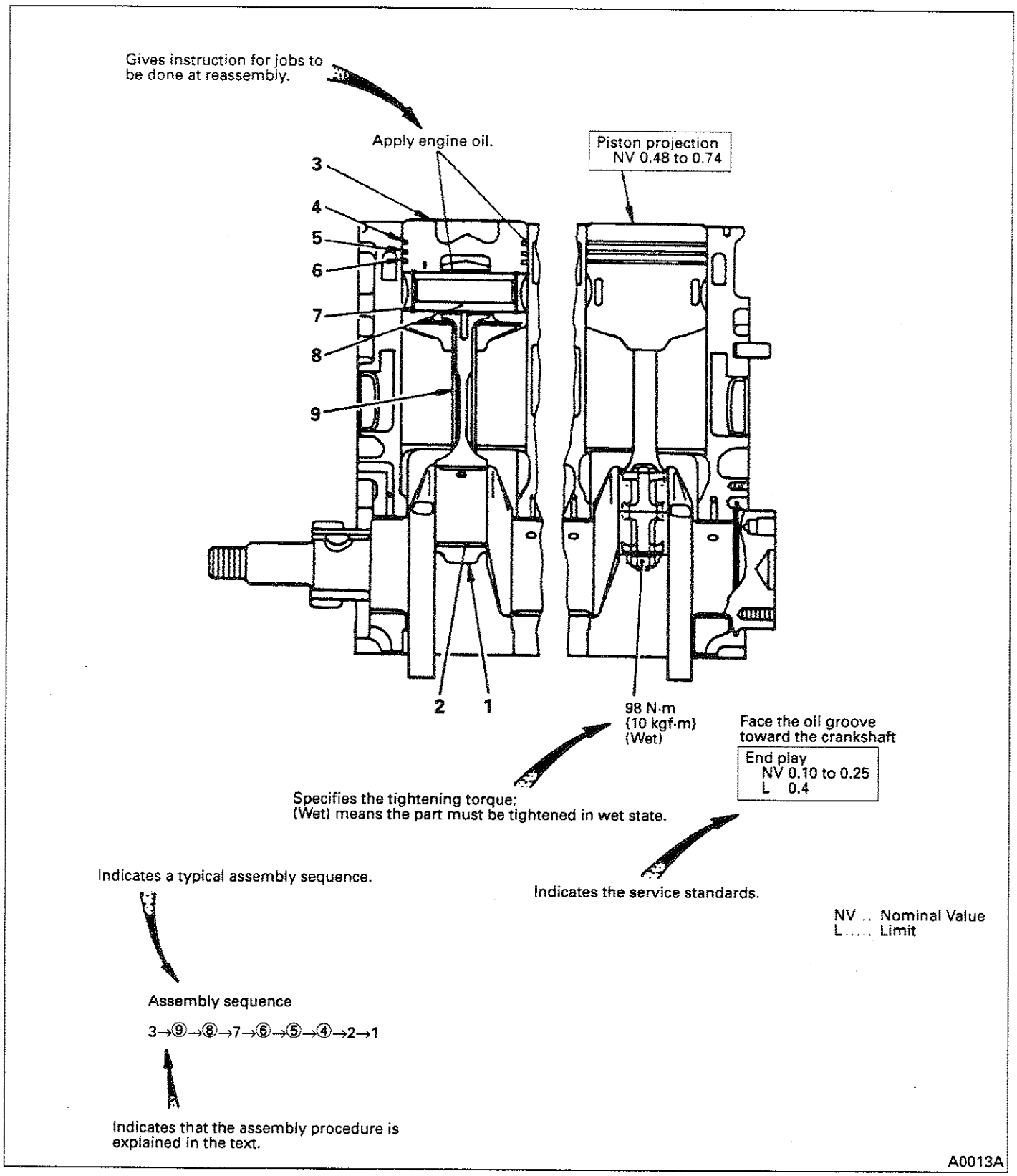

Illustrations (exploded views and assembly drawings) shows a typical service procedures if it is identical among various types of available systems and units.

GENERAL

CONTENTS

1. EXTERNAL VIEW 2
2. MAJOR SPECIFICATIONS 4
2.1 Major Specifications 4
2.2 Engine Outputs Classified by Application 4
3. ENGINE NUMBER AND CAUTION PLATE 5
4. GENERAL PRECAUTIONS FOR SERVICING 7
5. GENERAL BOLTS AND NUTS TIGHTENING TORQUE TABLE 8

1. EXTERNAL VIEW

<6D2>
Natural-aspirated engine

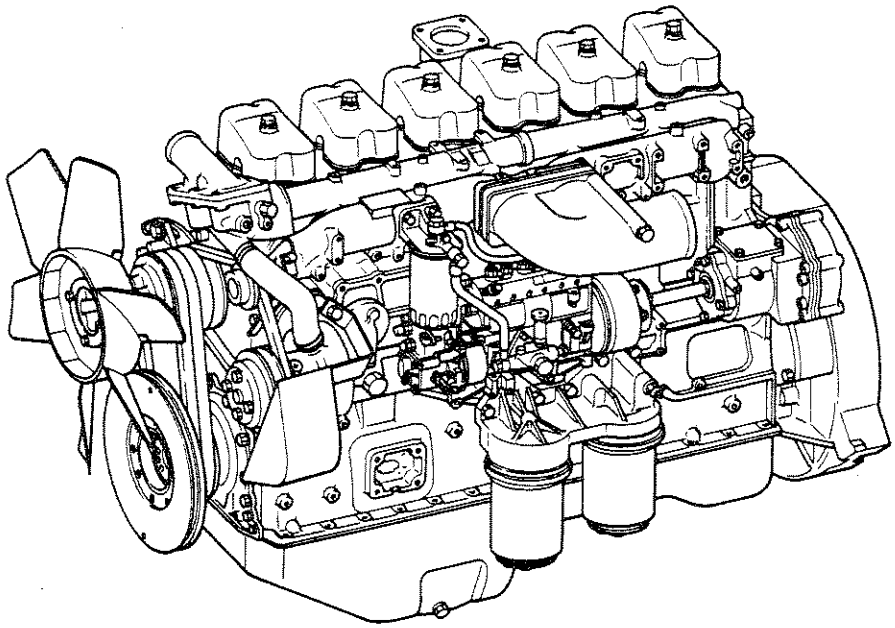

A0243A

Turbocharged engine

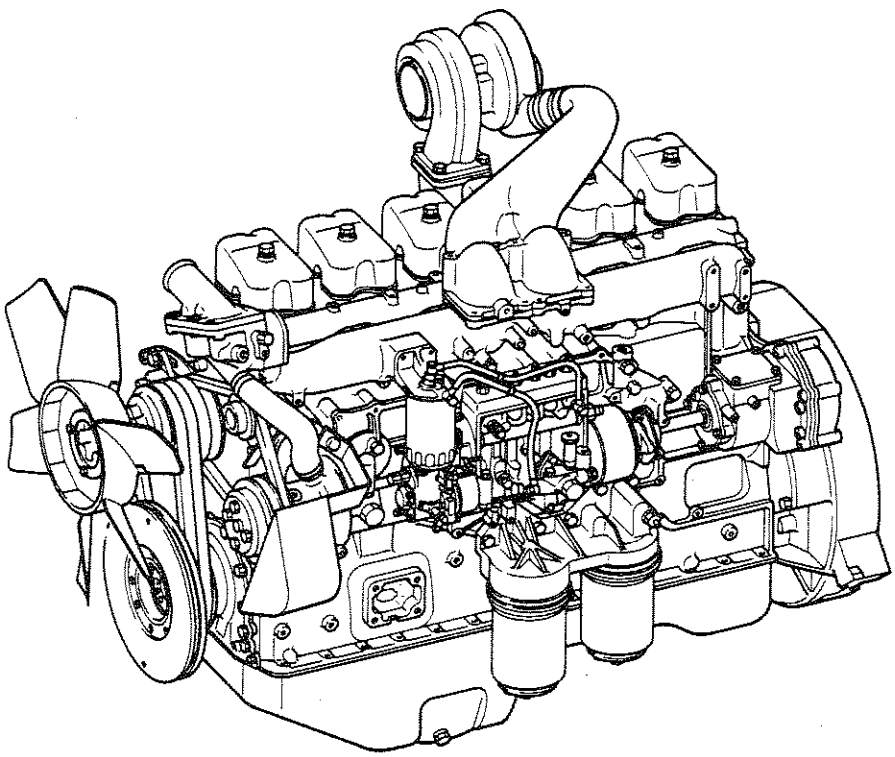

A0244A

<8DC>
Natural-aspirated engine

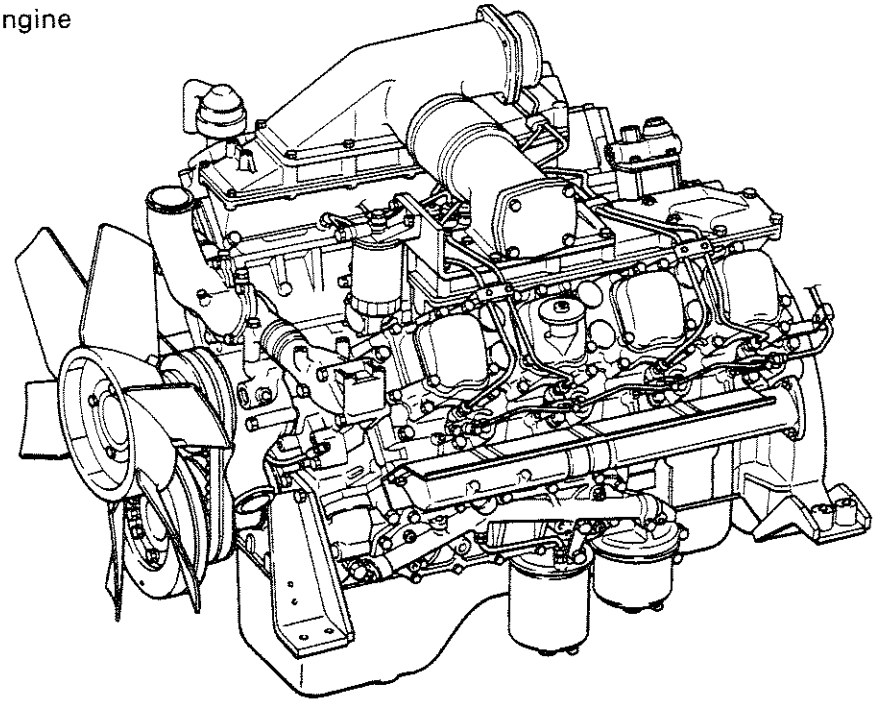

Turbocharged engine

A0245A

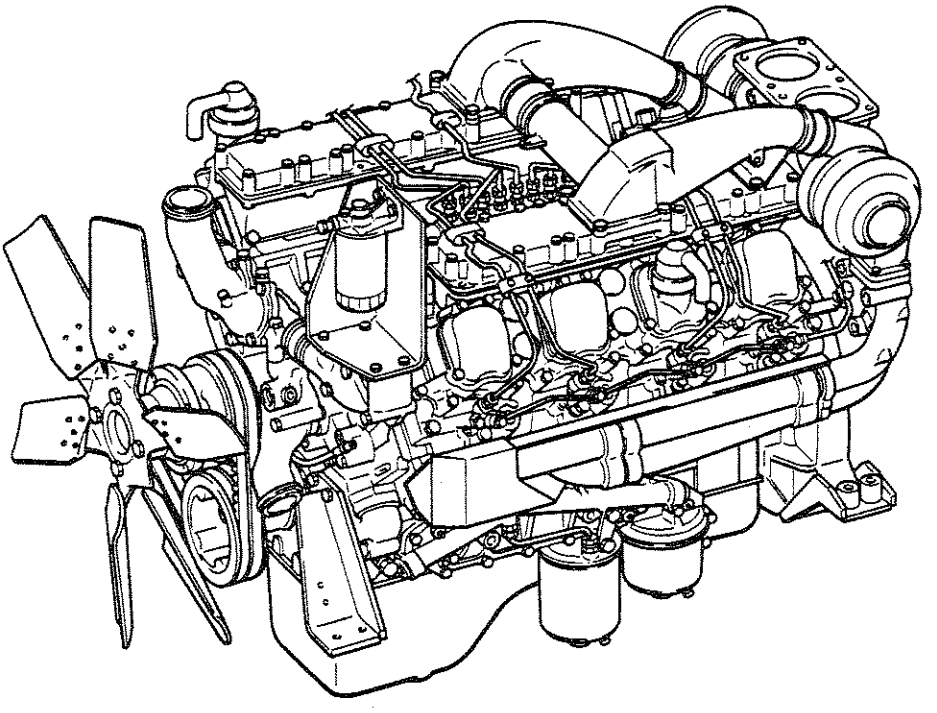

A0246B

2. MAJOR SPECIFICATIONS

2.1 Major Specifications

Item \ Engine model	6D22	6D22-T	6D22-TC	6D24-T	6D24-TC	8DC9	8DC9-T (2-turbo)	8DC9-TC	8DC9-TL
Type	Diesel, 4-cycle, water-cooled								
Combustion method	Direct injection								
No. and arrangement of cylinder	6, in-line					8-90°V			
Cylinder bore x stroke mm	130 x 140			130 x 150		135 x 140			
Total displacement cm^3	11149			11945		16031			
Engine dimension (with fan)									
Overall length mm	1473	1473	1473	1473	1473	1238	1518	1525	1598
Overall width mm	866	881	881	881	881	1028	1140	1140	1160
Overall height mm	1058	1169	1209	1169	1209	1126	1165	1232	1177
Empty weight kg*	895	920	950	930	960	1120	1300	1350	1255

* Empty weight as measured according to Mitsubishi Motors Corporation standard.

2.2 Engine Outputs Classified by Application

Application \ Engine speed rpm \ Engine model		6D22	6D22-T Turbocharged	6D22-TC Turbocharged with Aftercooler	8DC9-T Twin Turbocharged	8DC9-TC Twin Turbo-charged with Aftercooler
Intermittent rated output kW (HP)	1500	109 (146)	161 (216)	179 (240)	212 (284)	247 (331)
	1800	129 (173)	186 (249)	207 (277)	242 (325)	291 (390)
	2000	141 (189)	195 (261)	219 (294)	257 (345)	306 (410)
	2200	149 (200)	201 (269)	227 (304)	265 (355)	314 (421)
Continuous rated output kW (HP)	1500	99 (132)	146 (196)	163 (218)	193 (259)	225 (302)
	1800	117 (157)	169 (226)	188 (252)	220 (295)	265 (355)
	2000	128 (171)	178 (238)	199 (267)	234 (314)	278 (373)
	2200	135 (181)	183 (245)	206 (276)	241 (323)	285 (382)

NOTE:

1. **The output (SAE, gross) is corrected to standard ambient conditions based on SAE J1349.**
2. **The continuous rated output allows 10% (one hour) overload operation.**

3. ENGINE NUMBER AND CAUTION PLATE

(1) Engine number

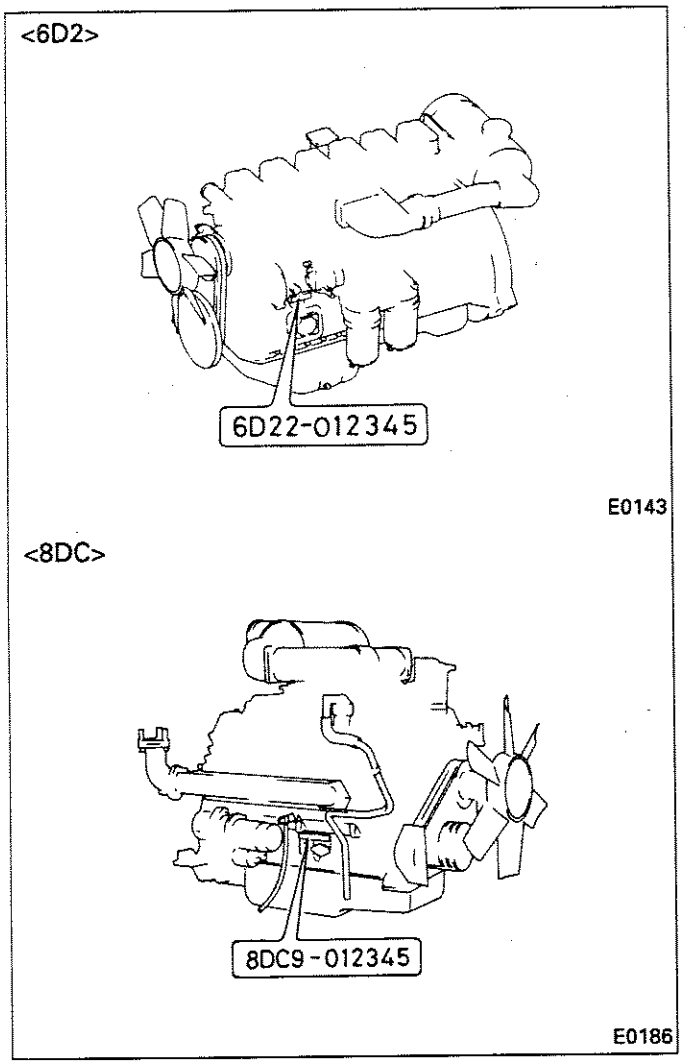

The engine number is stamped on the following positions.

6D2: Left front of the crankcase
8DC: Right center of the crankcase

Example: 6D22 – 012345
Engine number
Engine model

The engine number is important in knowing the history of the engine.

(2) Caution plate

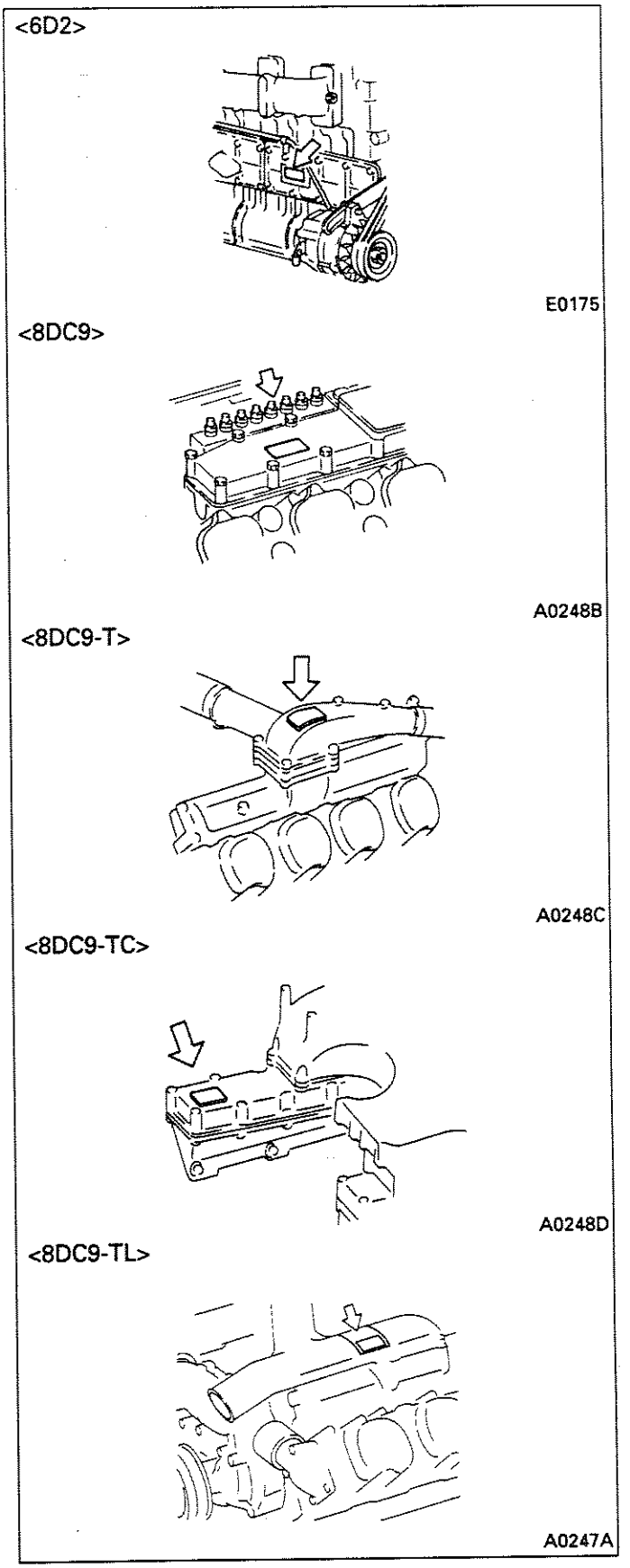

The caution plate is attached to the portion shown in the illustration. The caution plate indicates the following items.

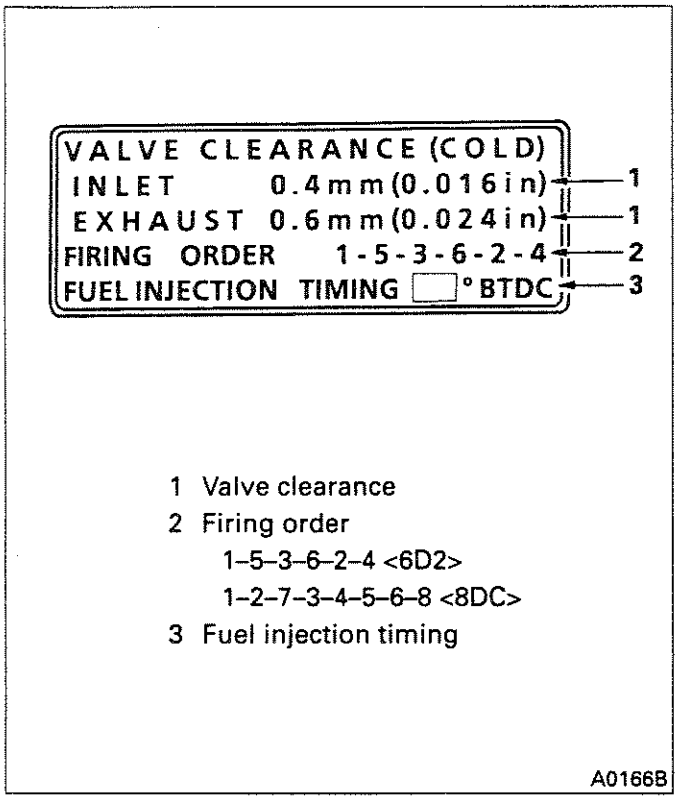

1 Valve clearance
2 Firing order
1–5–3–6–2–4 <6D2>
1–2–7–3–4–5–6–8 <8DC>
3 Fuel injection timing

4. GENERAL PRECAUTIONS FOR SERVICING

Before starting the service procedures, check the vehicle for total time driven, use conditions, and user's complaints and requests to know exactly the engine conditions. Record information where necessary.
To ensure you are doing correct and efficient service jobs, observe the following precautions:

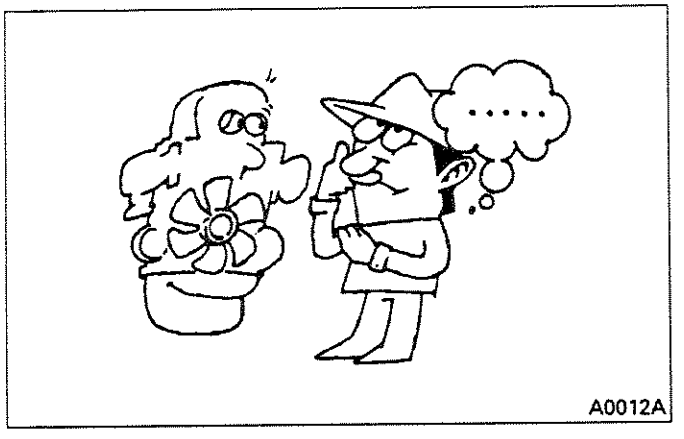
A0012A

(1) Before performing the service procedures given in this manual, know the trouble spots and isolate the possible cause to determine whether the removal or disassembly procedure is required.
(2) Select a flat surface for the service job.
(3) When servicing the electrical system, be sure to disconnect the negative cable from the battery.
(4) Carefully check parts for oil leaks before cleaning. After cleaning, it may become difficult to spot defective areas.
(5) Ready and make the most of the special tools required for servicing. Use the right tools (specified special tools) in the right place to prevent damages to parts and personal injury.
(6) Make alignment marks and keep disassembled parts neatly arranged to ensure that they are reassembled into the right positions.

- Special care must be taken for assemblies involving a number of parts, similar parts, or parts identical at right- and left-hand sides to ensure correct reassembly.
- For alignment and punching markings, select a position that would not mar the appearance and function.
- Clearly distinguish parts to be replaced from those reused.

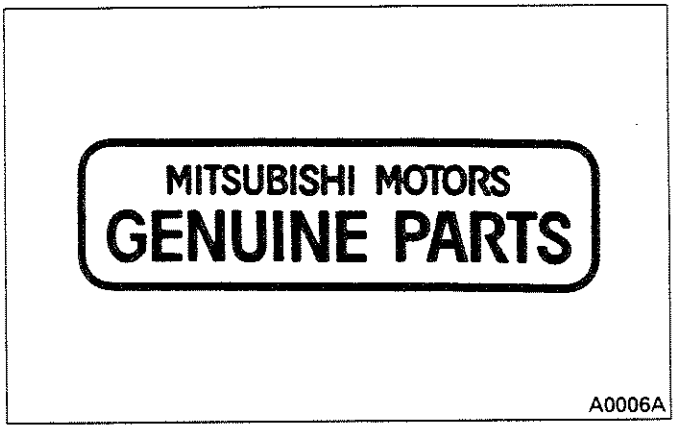

A0006A

(7) The oil seals, packings, O-rings, and other rubber parts, gaskets, and split pins must be replaced with a new one whenever they are removed. For replacement, use Mitsubishi Genuine parts.

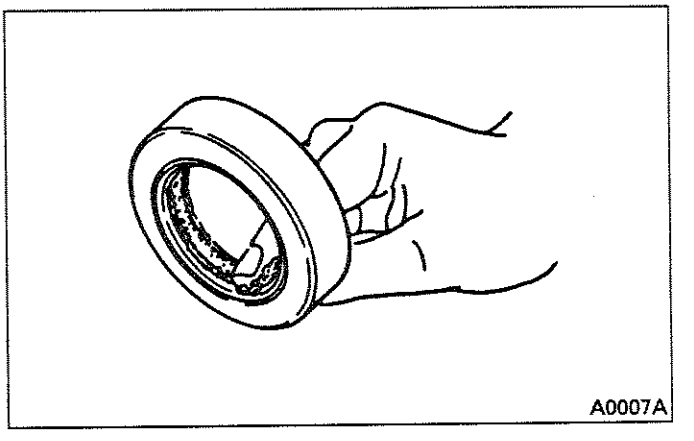
A0007A

(8) Apply the specified grease to U-packings, oil seals, dust seals, and bearings before installation.
(9) When work requires an assistant or two, always make sure of the safety each other. Never play with switches and levers.
(10) Make sure that your shoes are free from grease and oil especially when working on a heavy item.
(11) When checking or changing lubricants, wipe off grease and oil from parts immediately with a waste.
(12) Special care must be taken in handling sensors and relays which are suspectible to shocks and heat.
(13) Use care so that hands and fingers are not injured by sharp edges or corners of the parts.
(14) Wear safety goggles whenever handling a grinder or welding machine. Wear gloves as required to ensure utmost safety.

5. GENERAL BOLTS AND NUTS TIGHTENING TORQUE TABLE

- Use specified bolts and nuts and tighten them with the applicable torques according to the following table, unless otherwise specified.
- Threads and contact seats shall be dry.
- Where there is difference in strength classification between nut and bolt (or stud bolt), the torque specified for bolt shall apply.

Hex-head Bolt and Stud Bolt

Unit: N·m {kgf·m}

Strength classification	4T		7T		8T	
Representation / Diameter symbol	4 (Stud)		7 (Stud)		8 (Stud)	
M5	2 to 3 {0.2 to 0.3}	–	4 to 6 {0.4 to 0.6}	–	5 to 7 {0.5 to 0.7}	–
M6	4 to 6 {0.4 to 0.6}	–	7 to 11 {0.7 to 1.1}	–	8 to 12 {0.8 to 1.2}	–
M8	9 to 14 {0.9 to 1.4}	–	17 to 26 {1.7 to 2.6}	–	20 to 29 {2.0 to 3.0}	–
M10	19 to 28 {1.9 to 2.8}	18 to 26 {1.8 to 2.7}	36 to 52 {3.5 to 5.5}	33 to 49 {3.5 to 5.0}	45 to 60 {4.5 to 6.0}	41 to 59 {4.3 to 6.9}
M12	35 to 50 {3.4 to 5.0}	31 to 46 {3.1 to 4.7}	70 to 95 {7.0 to 9.5}	65 to 85 {6.5 to 8.5}	85 to 110 {8.5 to 11}	75 to 100 {7.5 to 10}
M14	60 to 85 {6.0 to 8.5}	55 to 75 {5.5 to 7.5}	120 to 160 {12 to 16}	110 to 140 {11 to 14}	130 to 180 {13 to 18}	120 to 160 {12 to 17}
M16	90 to 130 {9.5 to 13}	90 to 120 {9.0 to 12}	180 to 240 {18 to 24}	160 to 220 {16 to 22}	200 to 270 {20 to 27}	190 to 260 {19 to 26}
M18	140 to 190 {14 to 19}	120 to 160 {12 to 16}	260 to 340 {25 to 35}	220 to 290 {22 to 30}	290 to 390 {30 to 40}	260 to 340 {26 to 35}
M20	190 to 260 {19 to 26}	170 to 230 {17 to 23}	350 to 470 {36 to 48}	320 to 420 {32 to 43}	410 to 550 {41 to 56}	370 to 490 {37 to 50}
M22	260 to 340 {26 to 35}	230 to 300 {23 to 31}	470 to 640 {48 to 65}	430 to 570 {43 to 58}	550 to 740 {56 to 75}	490 to 670 {50 to 68}
M24	340 to 450 {34 to 46}	290 to 390 {29 to 40}	630 to 840 {63 to 86}	540 to 730 {55 to 74}	730 to 980 {74 to 100}	630 to 840 {64 to 86}

Hex-head Flange Bolt

Unit: N·m {kgf·m}

Strength classification	4T		7T		8T	
Representation / Diameter symbol	4		7		8	
M6	4 to 6 {0.4 to 0.6}	–	8 to 12 {0.8 to 1.2}	–	9 to 14 {0.9 to 1.4}	–
M8	10 to 15 {1.0 to 1.5}	–	19 to 28 {1.9 to 2.8}	–	22 to 32 {2.2 to 3.3}	–
M10	21 to 30 {2.1 to 3.1}	20 to 28 {1.9 to 2.9}	39 to 58 {3.9 to 6.0}	37 to 53 {3.6 to 5.4}	50 to 65 {5.0 to 6.5}	45 to 65 {4.5 to 6.5}
M12	38 to 54 {3.8 to 5.5}	35 to 51 {3.4 to 5.2}	80 to 110 {8.0 to 11}	70 to 95 {7.0 to 9.5}	90 to 120 {9.0 to 12}	85 to 110 {8.5 to 11}

Hex-head Nut

Unit: N·m {kgf·m}

Strength classification	4T		6T	
Representation				
Diameter symbol	Standard screw	Coarse screw	Standard screw	Coarse screw
M5	2 to 3 {0.2 to 0.3}	–	4 to 6 {0.4 to 0.6}	–
M6	4 to 6 {0.4 to 0.6}	–	7 to 11 {0.7 to 1.1}	–
M8	9 to 14 {0.9 to 1.4}	–	17 to 26 {1.7 to 2.6}	–
M10	19 to 28 {1.9 to 2.8}	18 to 26 {1.8 to 2.7}	36 to 52 {3.5 to 5.5}	33 to 49 {3.5 to 5.0}
M12	35 to 50 {3.4 to 5.0}	31 to 46 {3.1 to 4.7}	70 to 95 {7.0 to 9.5}	65 to 85 {6.5 to 8.5}
M14	60 to 85 {6.0 to 8.5}	55 to 75 {5.5 to 7.5}	120 to 160 {12 to 16}	110 to 140 {11 to 14}
M16	90 to 130 {9.5 to 13}	90 to 120 {9.0 to 12}	180 to 240 {18 to 24}	160 to 220 {16 to 22}
M18	140 to 190 {14 to 19}	120 to 160 {12 to 16}	260 to 340 {25 to 35}	220 to 290 {22 to 30}
M20	190 to 260 {19 to 26}	170 to 230 {17 to 23}	350 to 470 {36 to 48}	320 to 420 {32 to 43}
M22	260 to 340 {26 to 35}	230 to 300 {23 to 31}	470 to 640 {48 to 65}	430 to 570 {43 to 58}
M24	340 to 450 {34 to 46}	290 to 390 {29 to 40}	630 to 840 {63 to 86}	540 to 730 {55 to 74}

Hex-head Flange Nut

Unit: N·m {kgf·m}

Strength classification	4T	
Representation		
Diameter symbol	Standard screw	Coarse screw
M6	4 to 6 {0.4 to 0.6}	–
M8	10 to 15 {1.0 to 1.5}	–
M10	21 to 30 {2.1 to 3.1}	20 to 28 {1.9 to 2.9}
M12	38 to 54 {3.8 to 5.5}	35 to 51 {3.4 to 5.2}

ENGINE <6D2>

CONTENTS

1. GENERAL 2
2. SPECIFICATIONS 8
3. SERVICE STANDARDS 9
3.1 Service Standards Table 9
3.2 Tightening Torque Table 11
4. SPECIAL TOOLS 12
5. SERVICE PROCEDURES 16
5.1 Measuring Compression Pressure 16
5.2 Cylinder Head and Valve Mechanism ... 17
5.2.1 Disassembly 17
5.2.2 Inspection 20
5.2.3 Reassembly 26
5.3 Flywheel, Timing Gears, and Camshaft 31
5.3.1 Disassembly 31
5.3.2 Inspection 35
5.3.3 Reassembly 41
5.4 Crankcase and Main Moving Parts 46
5.4.1 Disassembly 46
5.4.2 Inspection 50
5.4.3 Reassembly 60
5.5 Inspecting and Adjusting Valve Clearances 66
6. TROUBLESHOOTING 68

1. GENERAL

(1) Combustion chamber

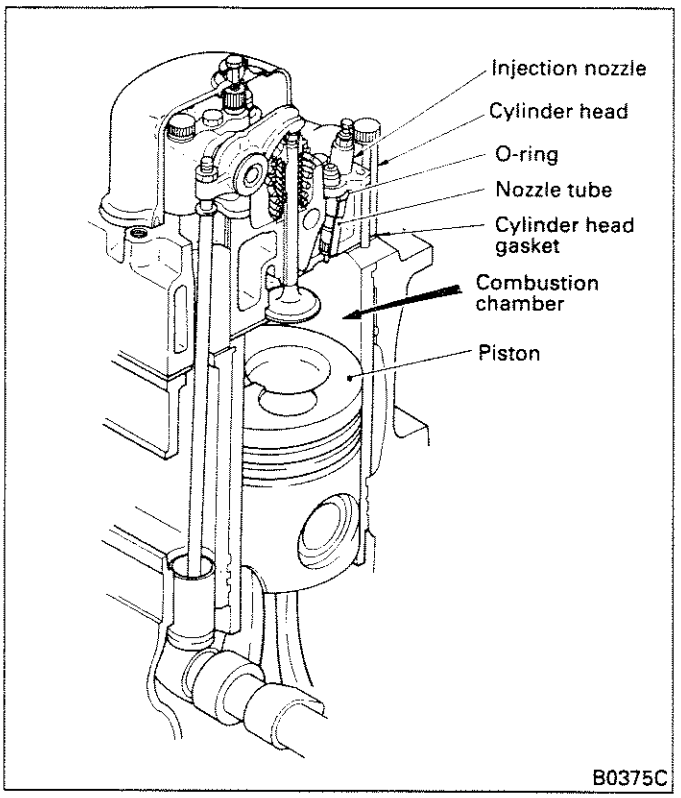

The combustion chambers are formed by the cylinder head and pistons. The injection nozzles, sheathed by the nozzle tubes, are mounted on the cylinder head. The nozzle tubes hold the nozzles and protect them from cooling water. Since the nozzles are exposed to the water in the water jacket, they are sealed by O-rings at the top and by staking at the bottom. Combustion is effected by compression of fuel injected directly into the combustion chambers.

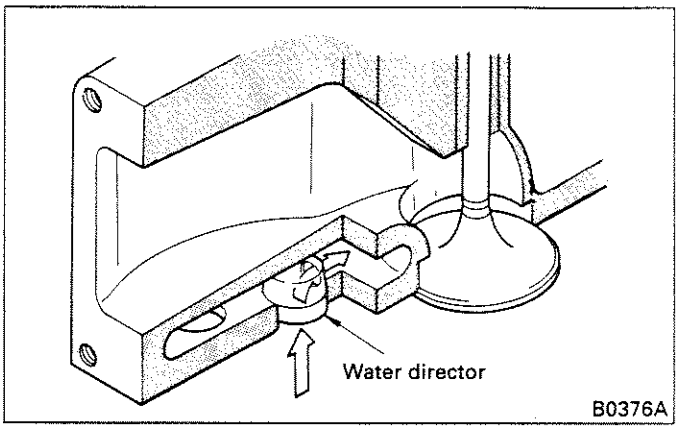

Water directors pressed into the bottom of the cylinder head optimize cooling of the combustion chambers by directing the flow of coolant.

(2) Valve mechanism

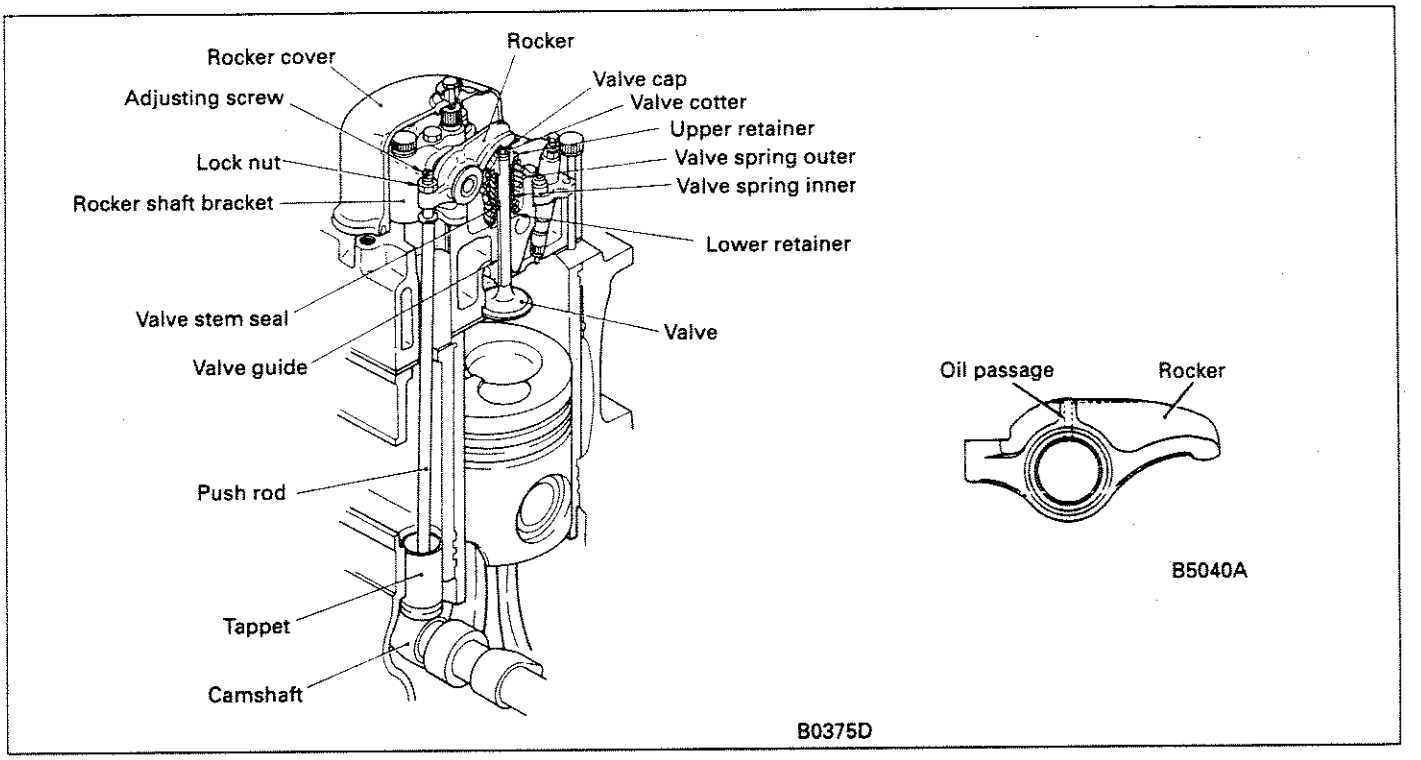

The valve mechanism is of an overhead-valve (OHV) type and is constructed as shown in the diagram.

(a) Valve stem seals are fitted to the inlet and exhaust valve stems to control the amount of lubricant flowing onto the sliding surfaces of the valves and valve guides.

(b) The inlet and exhaust valve springs are unevenly pitched. Two springs are mounted for each valve, and the inner and outer springs are wound in opposite directions.

(c) The rocker and rocker shaft are supported by the rocker shaft bracket and are installed independently for each cylinder. The same type of rocker is used for both inlet and exhaust valves, and the center of each rocker forms an oil passage.
The rocker shaft is a hollow rod sealed by a thrust plate at each end. The inside of the rocker shaft forms an oil passage.

(d) A steel ball is welded to the bottom end of each push rod, and a spherical concave piece is welded to the top end.

(e) The tappets are cylindrical. To help prevent localized wear, the areas that make contact with the camshaft are curved. The overall design enables the tappets to be removed via the side of the crankcase.

(f) The camshaft is held by camshaft bushings that are pressed into the crankcase. The cam profiles are specially curved to achieve smooth acceleration.

(3) Crankcase and cylinder liner

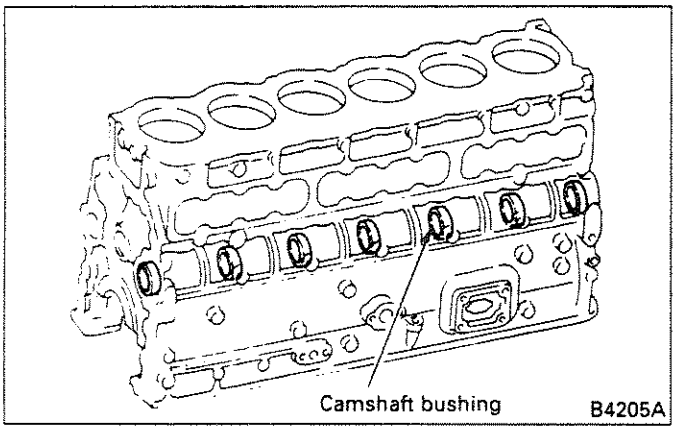

(a) Seven camshaft bushings are fitted in the camshaft bearing section of the crankcase. To facilitate removal and reinstallation of the camshaft, the diameter of each bearing is smaller toward the front.

(b) Coolant is fed in from the water pump (located at the front left of the crankcase). After cooling the oil cooler, it flows through the water jacket holes and around the cylinders, then reaches the cylinder head.

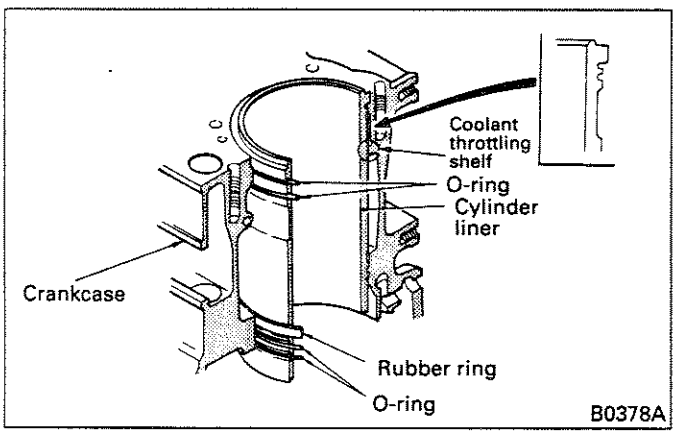

(c) The cylinder liner is a removable wet type. It is press-fitted into the crankcase, with its top held by the top of the crankcase and its bottom held by the water jacket.
Rubber rings and O-rings are provided at the top and bottom of the cylinder liner to prevent the ingress of coolant.
The water jacket has a water throttling shelf to optimize cooling performance.

(4) Piston and piston rings

(a) Pistons

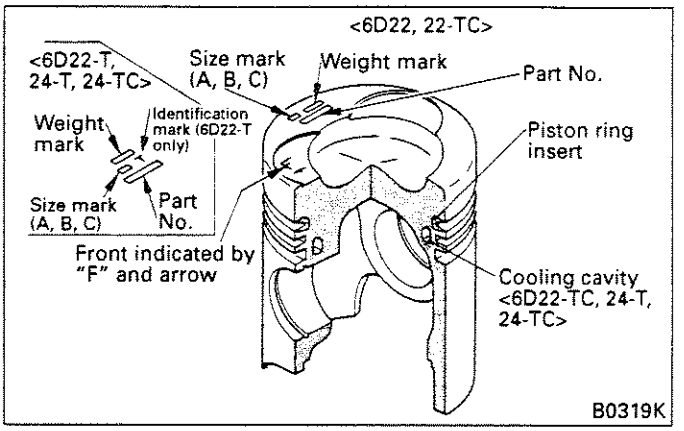

The piston is an aluminum casting, and a combustion space is recessed into its crown. A piston ring insert is cast into the 1st piston ring groove to improve durability.
Stamped on top of the piston are a size mark, a piston weight mark, the piston's part number, an identification mark, plus an "F" and arrow, which indicate the piston installation direction. The size mark is provided to enable selection of the correct cylinder liner size. In the case of an oversize piston, the size mark shows the degree of oversize.
The piston pin is fully floating and is held in position by a snap ring at either end.

(b) Piston rings

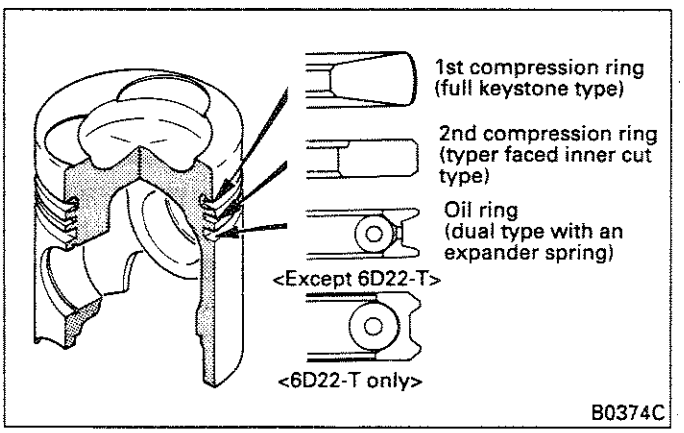

Two compression rings and one oil ring are fitted to each piston. They are shaped as shown in the illustration.

(5) Connecting rod and connecting rod bearing

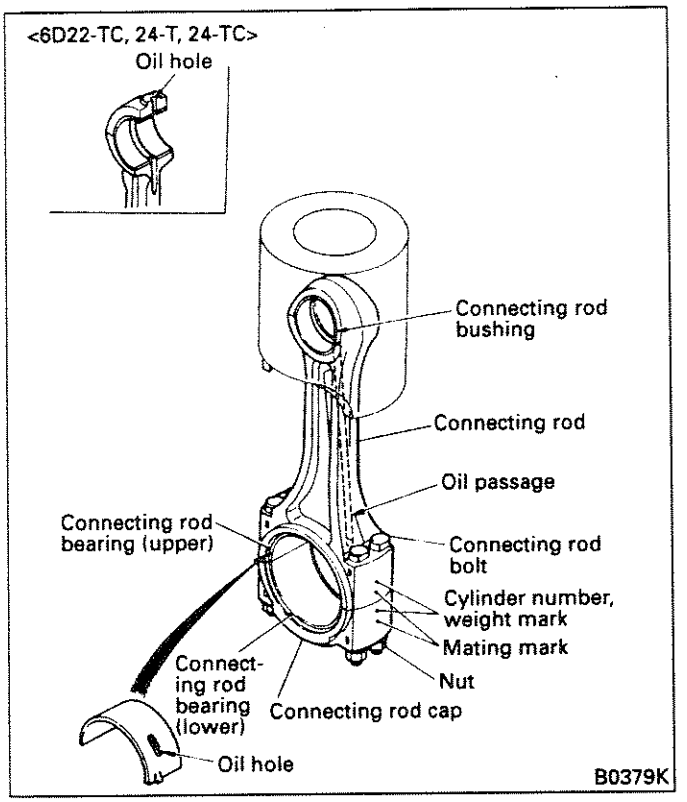

The connecting rod is a highly rigid I-section forging. A bushing is pressed into the small end, and a split-type plain bearing is used at the big end.
Since it is a split-type bearing, the connecting rod bearing has an upper half and a lower half. The upper half has an oil hole. This oil hole is in line with the oil passage inside the connecting rod. Engine oil for lubrication of the small end bushing is supplied via the oil hole and oil passage. In the 6D22-TC, 24-T, 24-TC, an oil hole is provided at the top of the connecting rod to help cool the piston.
The connecting rod and connecting rod cap are held together by four connecting rod bolts.

(6) Crankshaft and crankshaft main bearings

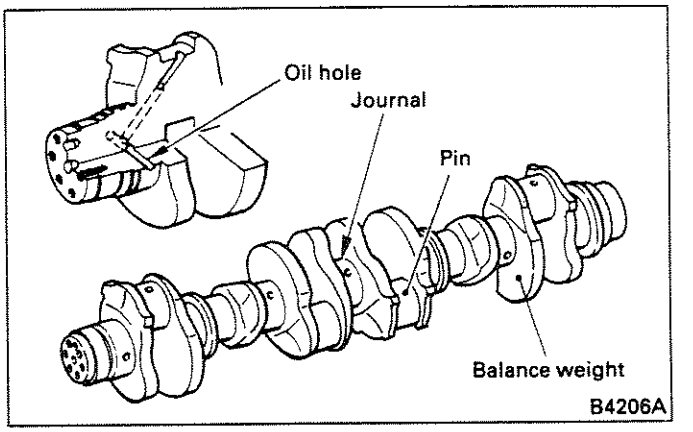

(a) The crankshaft is highly rigid and is cast in one piece with its balance.
Between each journal and pin is an oil hole. Some of the main bearing oil is fed through this hole to lubricate the connecting rod bearing.

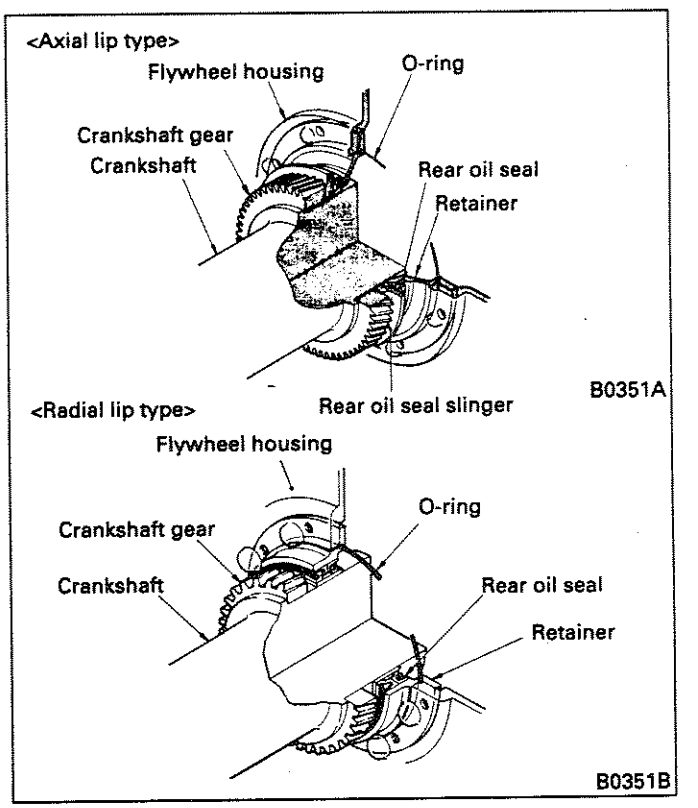

(b) The crankshaft gear that drives the timing gears is press-fitted onto the rear of the crankshaft. Note that a radial- or axial-lip-type oil seal is fitted to the front and rear ends of the crankshaft.

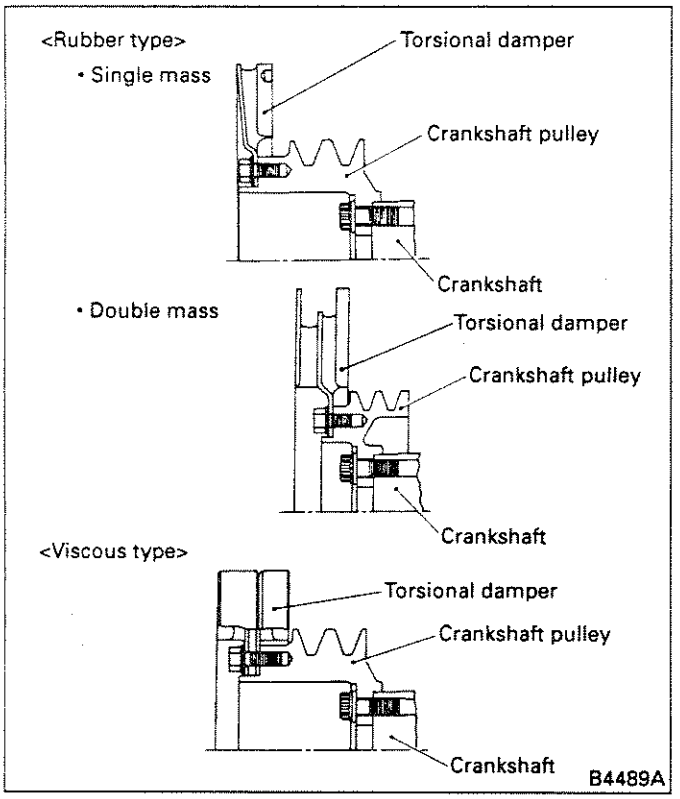

(c) The front end of the crankshaft is flanged, and the crankshaft pulley is bolted to the flange. A torsional damper is mounted on the crankshaft pulley to absorb the crankshaft's torsional vibration.

(d) Main bearings

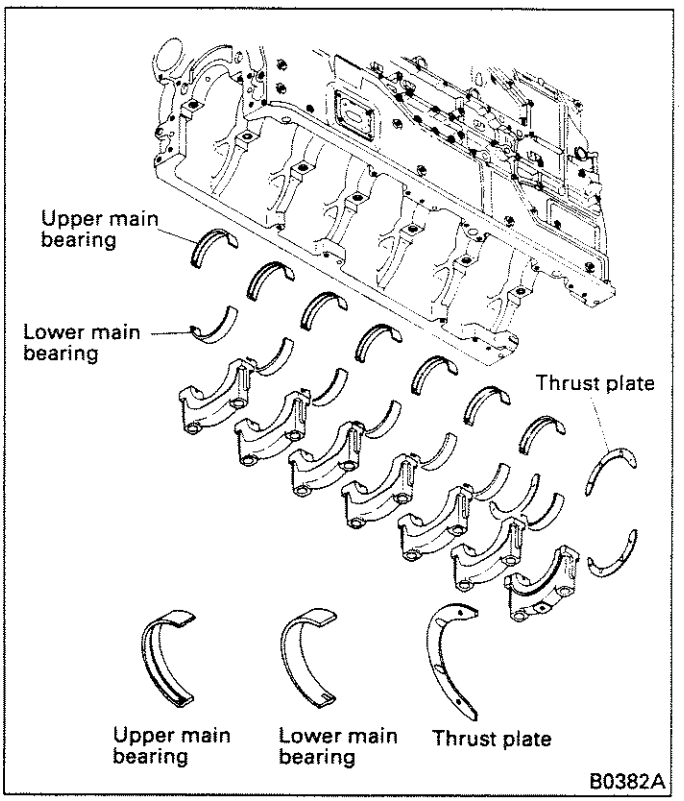

Each main bearing is a split-type plain bearing made of special alloy-plated kelmet metal with backing material.
Since they are split-type bearings, the main bearings have upper halves and lower halves. Each upper half has an oil groove on its inside surface, plus an oil hole. The oil hole lines up with an oil hole in the crankcase. There are 7 main bearing pairs. A split-type thrust plate is fitted to the rearmost bearing.

(7) Timing gears

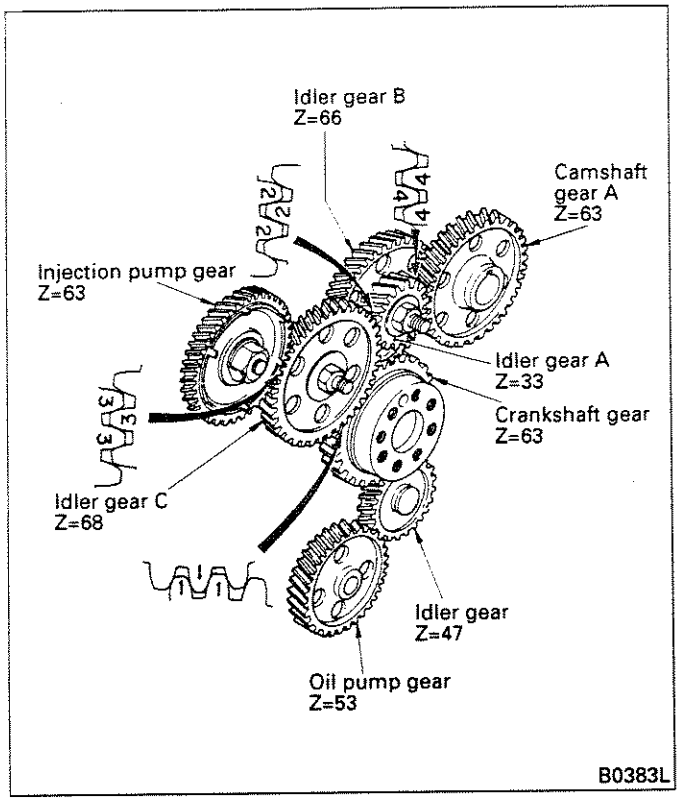

The timing gears are located in the flywheel housing at the rear of the engine. The geartrain is as shown in the illustration.
The timing gears are helical, and each is stamped with a timing mark. The timing marks ensure that the gears mesh correctly when reassembled.

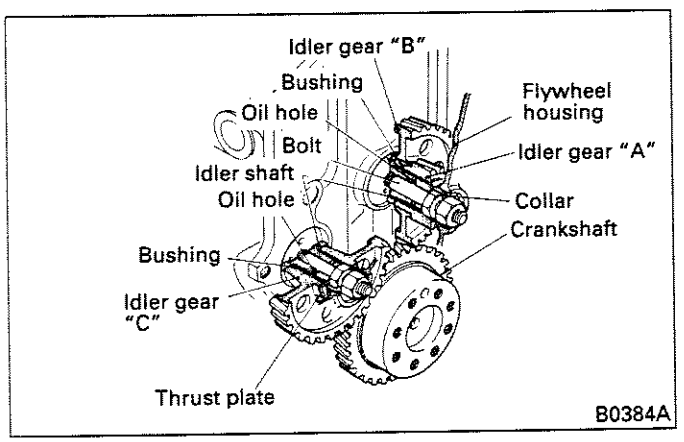

The crankshaft gear is press-fitted onto the crankshaft and held in place by a dowel pin. The crankshaft gear drives the other gears.

Each idler gear is mounted onto the crankcase with an idler shaft bolt and is supported at the other end by the flywheel housing.
The idler gears turn on the idler shafts by means of pressed-in bushings. The bushings are lubricated by oil that flows through the inside of the idler shafts via the crankcase oil holes.

(8) Flywheel

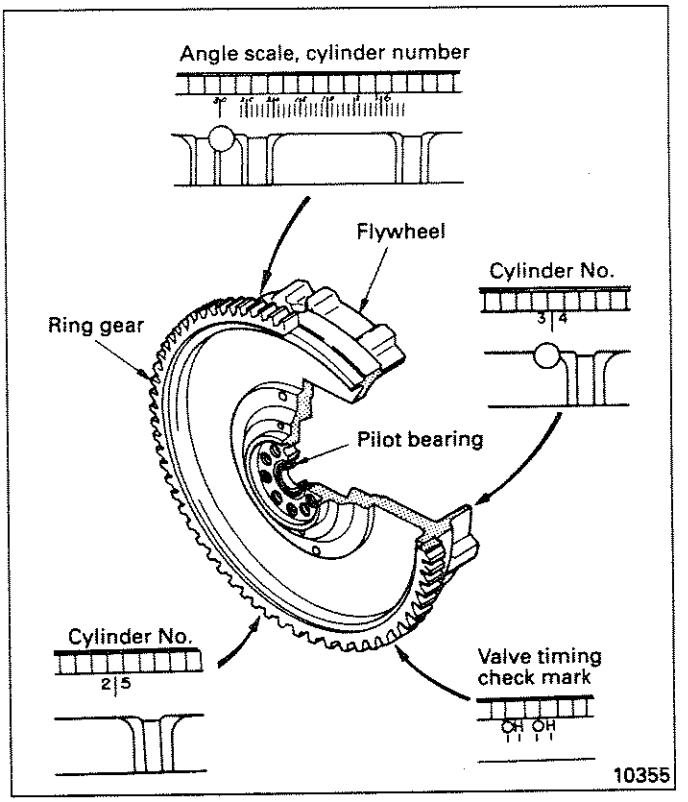

The flywheel is made of cast iron, and at its center is a pilot bearing for the clutch shaft. The outer ring gear that meshes with the starter pinion is shrink-fitted.
The ring gear teeth are chamfered on one side to ensure that the starter pinion fits easily.
Cylinder numbers, an angle scale, and valve timing check marks are stamped on the outside of the flywheel, as shown in the illustration.

2. SPECIFICATIONS

Item	Specification		
Engine model	6D22	6D22-T	6D22-TC
Type	6-cylinder, in-line, water-cooled, 4-cycle diesel	←	←
Combustion chamber type	Direct injection	←	←
Valve mechanism	Overhead valve	←	←
Cylinder bore x stroke (mm)	130 x 140	←	←
Total displacement (cm^3)	11149	←	←
Compression ratio	17	16	15.5
Fuel injection sequence	1-5-3-6-2-4	←	←
Cylinder liner type	Wet	←	←
Piston type	Trunk-type slipper skirt	←	← (with cooling cavity)
No. of piston rings	Compression ring: 2 Oil ring: 1	←	←

Item	Specification	
Engine model	6D24-T	6D24-TC
Type	6-cylinder, in-line, water-cooled, 4-cycle diesel	←
Combustion chamber type	Direct injection	←
Valve mechanism	Overhead valve	←
Cylinder bore x stroke (mm)	130 x 150	←
Total displacement (cm^3)	11945	←
Compression ratio	16.5	←
Fuel injection sequence	1-5-3-6-2-4	←
Cylinder liner type	Wet	←
Piston type	Trunk-type slipper skirt (with cooling cavity)	←
No. of piston rings	Compression ring: 2 Oil ring: 1	←

3. SERVICE STANDARDS

3.1 Service Standards Table

Unit: mm

Maintenance item		Nominal value (Basic diameter in [ ])	Limit	Remedy and remarks
Compression pressure (at 200 rpm)		2.75 MPa {28 kgf/cm²}	1.96 MPa {20 kgf/cm²}	Difference between cylinders: 390 KPa {4 kgf/cm²} or less
Rocker bushing-to-rocker shaft clearance		[28] 0.03 to 0.08	0.2	Replace bushing
Outer valve spring	Free length	89.38	85	Replace
	Installed load/installed length	450 N {46.1 kgf} / 58.35	380 N {39 kgf} / 58.35	
Inner valve spring	Free length	65.04	62	Replace
	Installed load/installed length	115 N {12 kgf} / 50.35	100 N {10.2 kgf} / 50.35	
	Squareness	–	2.5	
Tappet-to-crankcase clearance		[35] 0.06 to 0.10	0.2	Replace
Push rod runout		–	0.5	Replace
Cylinder head bottom surface distortion		0.07 or less	0.08	Correct or replace
Height of cylinder head from top to bottom surface		130	129.8	Replace
Valve stem outside diameter	Inlet	11.95 to 11.96	11.85	Replace
	Exhaust	11.91 to 11.93		
Valve stem-to-valve guide clearance	Inlet	[12] 0.05 to 0.09	0.2	Replace valve guide
	Exhaust	[12] 0.09 to 0.12		
Valve margin	Inlet	2.2	1.7	Reface or replace
	Exhaust	2.5	2.0	
Valve seat angle		45°	–	
Valve sinkage from cylinder head bottom surface	Inlet	0.25 to 0.75	1.0	Replace valve seat insert (– shows projection)
	Exhaust	–0.05 to 0.45	0.7	
Valve seat insert seat width		2.69 to 2.96	3.5	Correct or replace
Timing gear backlash	Between crankshaft gear and idler gear B	0.08 to 0.20	0.4	Inspect
	Between idler gear A and camshaft gear	0.07 to 0.18	0.4	Inspect
	Between idler gear A and idler gear C	0.07 to 0.18	0.4	Inspect
	Between injection pump gear and idler gear C	0.08 to 0.20	0.4	Inspect
Idler gear end play		0.05 to 0.15	0.4	Replace thrust plate
Camshaft gear end play		0.05 to 0.22	0.4	
Flywheel	Friction surface distortion	0.1 or less	0.2	Correct or replace
	Distance from clutch cover mounting surface to friction surface	47.8 to 48.2	49.5	Replace
	Friction surface runout (when fitted)	–	0.2	Correct or replace
Idler gear A-to-idler shaft A clearance		[40] 0.03 to 0.06	0.2	Replace bushing
Idler gear C-to-idler shaft C clearance		[46] 0.03 to 0.06	0.2	Replace bushing

Unit: mm

Maintenance item			Nominal value (Basic diameter in [ ])	Limit	Remedy and remarks	
Cam profile (difference between lobe height and base circle diameter)		Inlet	8.83	8.3	Replace	Lobe height: 56.167 Base circle diameter: 47.334
		Exhaust	8.82	8.3	Replace	Lobe height: 56.036 Base circle diameter: 47.216
Camshaft journal-to-camshaft bushing clearance		No. 1	[65.00] 0.03 to 0.08	0.25	Replace bushing	
		No. 2	[65.25] 0.03 to 0.08			
		No. 3, 4	[65.50] 0.03 to 0.08			
		No. 5, 6	[65.75] 0.03 to 0.08			
		No. 7	[66.00] 0.03 to 0.08			
Camshaft bend			0.05 or less	0.08	Replace	
Camshaft gear-to-camshaft interference			[40] 0.02 to 0.05	–	Can be reassembled up to 3 times	
Flywheel housing eccentricity			–	0.2	Correct	
Connecting rod end play			0.2 to 0.5	1.0	Replace	
Projection of piston from top surface of crankcase			0.87 to 1.33	–	Inspect	
Crankshaft end play			0.09 to 0.23	0.4	Replace thrust plate	
Flatness of cylinder liner supporting flange			–	0.1	Replace crankcase	
Crankcase top surface distortion			0.07 or less	0.2	Correct	
Cylinder liner		Inside diameter	130.014 to 130.054	130.25	Replace or grind to oversize	
		Flange projection	0.01 to 0.08	–		
		Cylindricity	0.02 or less	–		
Piston-to-cylinder liner clearance		6D22	[130] 0.178 to 0.204	–	Correct or replace cylinder liner, or replace piston	
		6D22-T	[130] 0.173 to 0.199	–		
		6D22-TC	[130] 0.188 to 0.214	–		
		6D24-T, 24-TC	[130] 0.193 to 0.219	–		
Piston ring groove-to-piston ring clearance	1st compression ring	6D22	0.05 to 0.12	0.25	Replace piston ring or piston	
		6D22-T	0.03 to 0.10			
		6D22-TC	0.01 to 0.09			
		6D24-T, 24-TC	0.02 to 0.10			
	2nd compression ring	6D22	0.05 to 0.08	0.25	Replace piston ring or piston	
		6D22-T, 22-TC, 24-T, 24-TC	0.07 to 0.10			
	Oil ring		0.03 to 0.06	0.15		
Piston ring end gap	1st compression ring	6D22, 22-T, 22-TC	0.4 to 0.6	1.5	Replace	
		6D24-T, 24-TC	0.4 to 0.55			
	2nd compression ring	6D22, 22-T, 22-TC	0.4 to 0.6	1.5		
		6D24-T, 24-TC	0.5 to 0.65			
	Oil ring		0.4 to 0.6	1.5		

Unit: mm

Maintenance item		Nominal value (Basic diameter in [ ])	Limit	Remedy and remarks
Piston pin-to-piston pin hole clearance		[50] 0.01 to 0.02	0.1	Replace piston or piston pin
Piston pin-to-connecting rod small end bushing clearance		[50] 0.02 to 0.05	0.1	Replace bushing
Connecting rod bend and torsion		–	0.05 or less	Correct or replace
Connecting rod bearing span when free		–	Less than 90.5	Replace
Connecting rod bearing-to-crankshaft pin clearance		[84] 0.07 to 0.13	0.25	Replace bearing
Main bearing-to-crankshaft journal clearance		[100] 0.08 to 0.15	0.25	Replace bearing
Main bearing span when free		–	Less than 106.5	Replace
Crankshaft pin and journal	Roundness	0.01 or less	0.08	Correct
	Cylindricity	0.006 or less	–	
Crankshaft bend		0.04 or less	0.1	Correct or replace
Valve clearance (when cold)	Inlet	0.4	–	Adjust
	Exhaust	0.6	–	

3.2 Tightening Torque Table

Location tightened	Screw size O. D. x pitch (mm)	Tightening torque N·m {kgf·m}	Remarks
Cylinder head bolt	M14 x 2	–	Wet. See item (6) of section 5.2.3 for tightening procedure.
Rocker shaft bracket mounting bolt	M10 x 1.5	34 {3.5}	
Rocker cover bolt	M8 x 1.25	4.9 {0.5}	
Rocker adjusting screw lock nut	M10 x 1.25	59 {6}	
Flywheel mounting bolt	M16 x 1.5	315 {32}	Wet
Idler shaft bolt A	M16 x 2	155 {16}	
Idler shaft bolt C	M16 x 2	155 {16}	
Idler shaft nut (for mounting collar)	M16 x 1.5	98 {10}	
Flywheel housing bolt	M12 x 1.75	69 {7}	
Oil jet check valve	M12 x 1.75	34 {3.5}	Cannot be reused
Connecting rod cap nut	M13 x 1.25	115 {12}	Wet
Main bearing cap bolt	M18 x 2.5	–	Wet. See item (7) of section 5.4.3 for tightening procedure.
Crankshaft pulley mounting bolt	M14 x 1.5	175 {18}	
Front cover mounting bolt	M12 x 1.75	33 {3.4}	

4. SPECIAL TOOLS

Unit: mm

Tool name	Shape
Compression Gauge Adapter MH061461 Measuring compression pressure	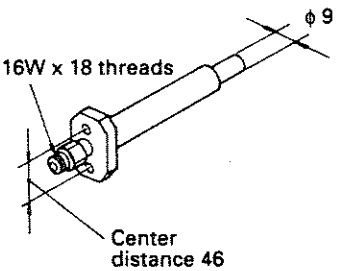 01942
Valve Lifter MH061668 Removing and installing valve cotters Valve Lifter Hook MH061679 Removing and installing valve cotters	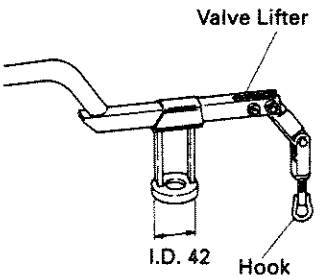 01956
Nozzle Tube Remover MH061232 Removing nozzle tubes	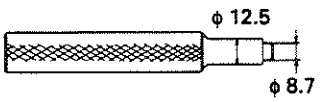 13597
Rocker Bushing Puller MH061236 Replacing rocker bushings	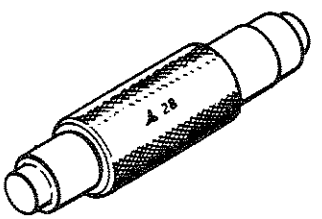 10593
Valve Guide Puller 30091-08100 Replacing valve guides	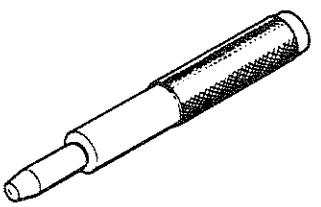 B5111A

Unit: mm

Tool name	Shape
Caulking Tool Body MH061360 Installing and caulking valve seat inserts Caulking Ring (Inlet) MH061650 Installing and caulking valve seat inserts Caulking Ring (Exhaust) MH061651 Installing and caulking valve seat inserts	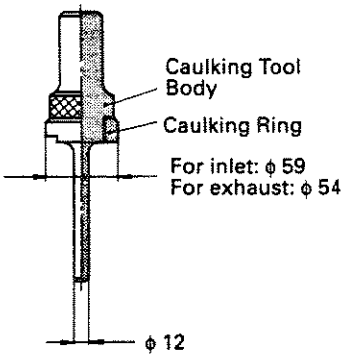 B5202A
Valve Lapper 30091-07500 Valve lapping	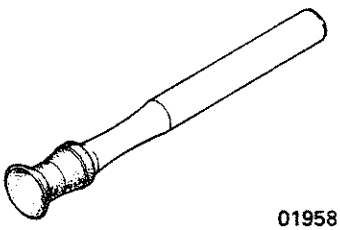 01958
Nozzle Tube Stamp MH061229 Installing nozzle tubes Nozzle Tube Installer Flange MH061416 Installing nozzle tubes Nozzle Tube Installer Bolt MH061231 Installing nozzle tubes	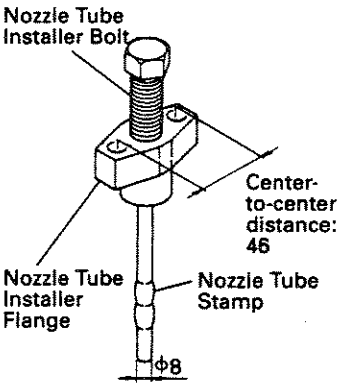 B5181A
Valve Stem Seal Installer ME067431 Installing valve stem seals	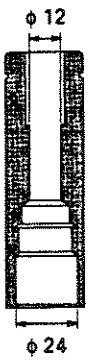 B5191A

Unit: mm

Idler Gear Bushing Puller MH061228 Replacing idler gear bushing (for idler gear A)	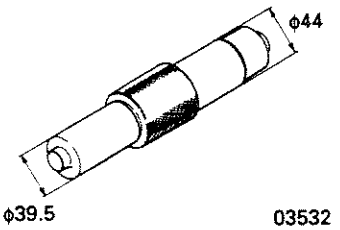 03532
Idler Gear Bushing Puller MH062046 Replacing idler gear bushing (for idler gear C)	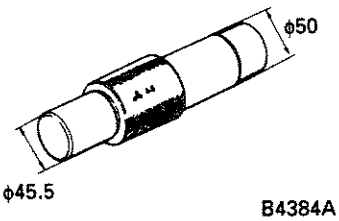 B4384A
Gear Puller MH061061 Removing gears and pulleys	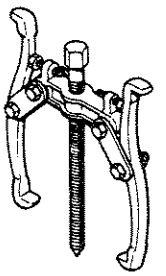 Maximum pulling outside dia. 200 B5071A
Socket Wrench MH061540 Tightening cylinder head bolts	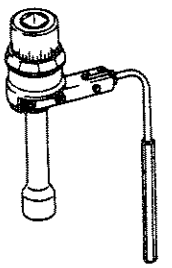 B0598A
Socket Wrench MH063365 Tightening main bearing cap bolts	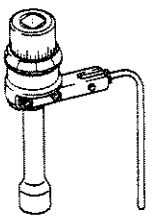 13204

Unit: mm

Camshaft Bushing Extractor Bar MH062118 Removing camshaft bushings Nos. 1 to 6	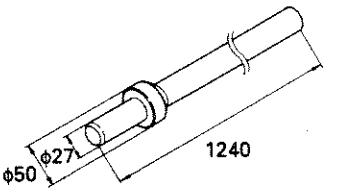 B4867A
Camshaft Bushing Extractor Guide MH062119 Removing camshaft bushings Nos. 1 to 6	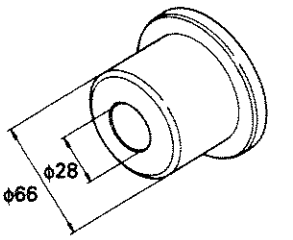 B4868A
Camshaft Bushing Extractor Adapter MH062120 MH062121 MH062122 MH062123 Removing camshaft bushings Nos. 1 to 6	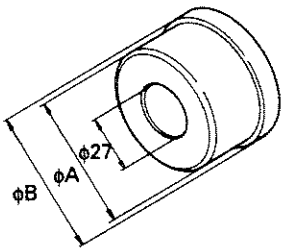 B4869A
Camshaft Bushing Extractor MH062124 Removing camshaft bushing No. 7	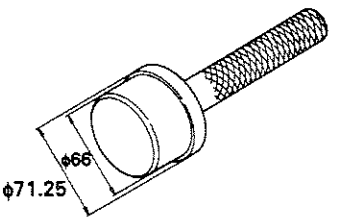 B4870A

Part No.	ϕ A	ϕ B	Applicable bushing
MH062120	69.75	65	No.1
MH062121	70	65.25	No.2
MH062122	70.25	65.5	No.3, 4
MH062123	70.75	65.7	No.5, 6

Unit: mm

Camshaft Bushing Installer Bar
MH062125

Installing camshaft bushings Nos. 2 to 6

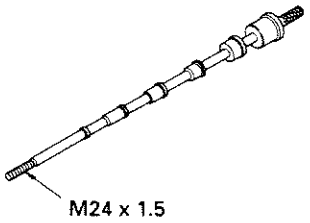

B4871A

Camshaft Bushing Installer Guide
MH062127

Installing camshaft bushings Nos. 2 to 6

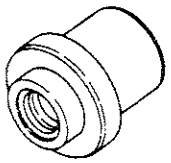

B4872A

Camshaft Bushing Installer Adapter
MH062133
MH062134
MH062135
MH062136
MH062137

Installing camshaft bushings Nos. 2 to 6

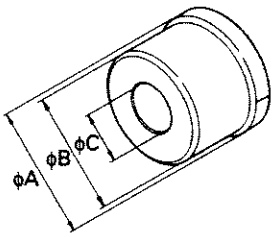

Part No.	ϕ A	ϕ B	ϕ C	Applicable bushing
MH062133	71	65.25	27	No.2
MH062134	71.25	65.5	35	No.3
MH062135	71.5	65.5	43	No.4
MH062136	71.75	65.75	51	No.5
MH062137	72	65.75	59	No.6

B4873A

Camshaft Bushing Installer Nut
MH062130

Installing camshaft bushings Nos. 2 to 6

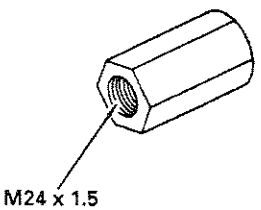

B4874A

Unit: mm

Camshaft Bushing Installer
MH062131
MH062143

Installing camshaft bushings Nos. 1 and 7

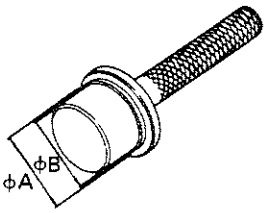

Part No.	ϕ A	ϕ B	Applicable bushing
MH062131	70.75	65	No.1
MH062143	72.25	66	No.7

B4875A

Oil Seal Slinger Installer
MH061652

Installing rear oil seal slinger

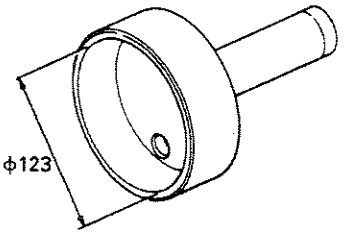

B5161B

Piston Ring Tool
31191-02900

Removing piston rings

For ϕ102 to 178

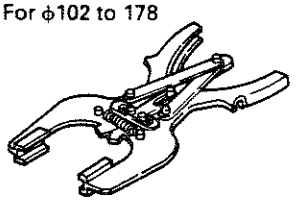

02013

Crankcase Table
MH061889

Measuring flatness of cylinder-liner-supporting flanges on crankcase

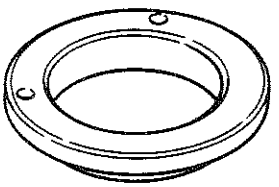

B1480A

Unit: mm

Cylinder Liner Extractor MH061490 Removing cylinder liners	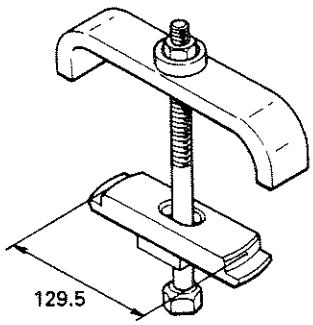 B5131A
Cylinder Liner Installer MH061759 Installing cylinder liners	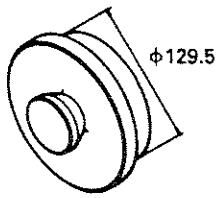 B5141A
Guide Plate Assembly MH063368 Removing connecting rod bushings Mandrel 31291-75200 Removing connecting rod bushings Collar A MH063370 Removing connecting rod bushings Collar B MH062189 Removing connecting rod bushings Nut 31291-75500 Removing connecting rod bushings	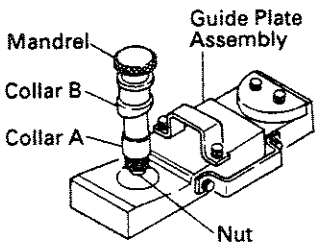 B5151A
Oil Seal Installer 31191-04300 Installing rear oil seal (radial lip type)	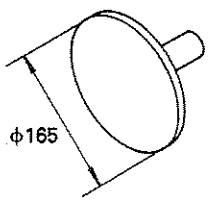 PE7263

Unit: mm

Oil Seal Sleeve Installer 31191-07100 Installing rear oil seal sleeve	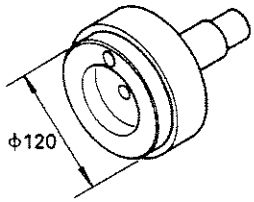 PE7264
Oil Seal Slinger Installer MH061817 Installing front oil seal slinger	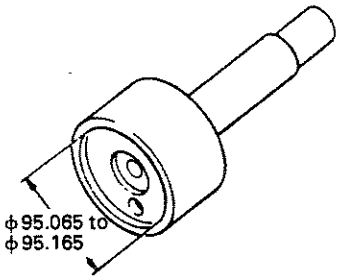 B0585A
Piston Guide Clamp MH061666 Installing pistons Piston Guide Lever MH061658 Installing pistons	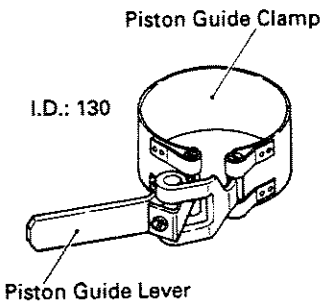 B5171B
Thickness Gauge MH061359 Measuring valve clearances	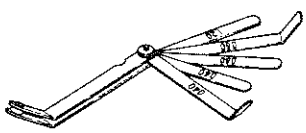 11605

5. SERVICE PROCEDURES

5.1 Measuring Compression Pressure

Compression pressure should be measured prior to disassembly of the engine. Take measurements regularly and keep track of changes. During the engine's running-in period or after parts have been replaced, the compression pressure will increase slightly as the piston rings and valve seats fit snugly in position. The pressure will come down as parts wear.

Measurement procedure

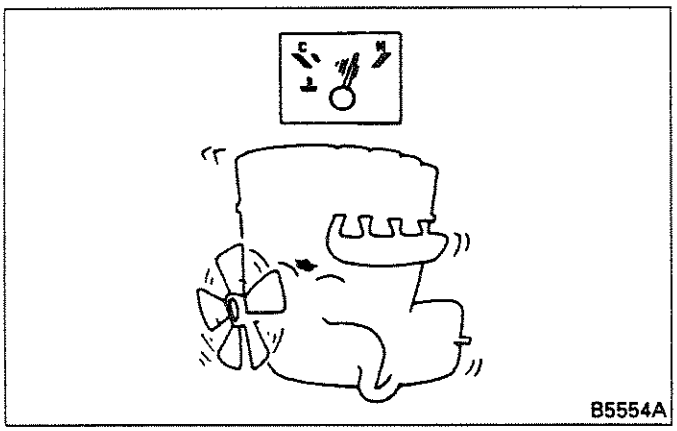

(1) Warm up the engine until the coolant temperature reaches 75 to 85°C, then turn off the ignition.

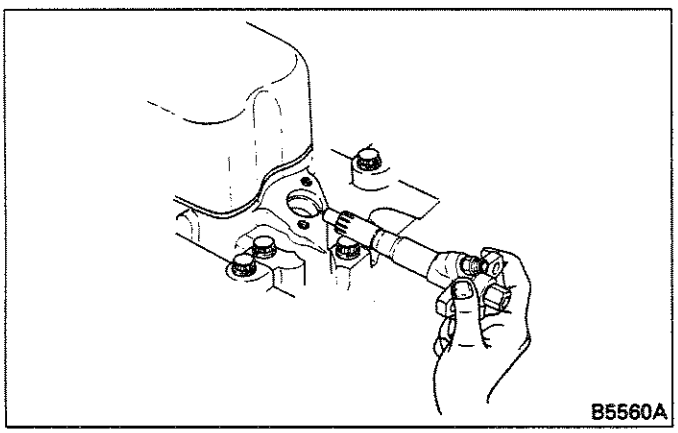

(2) Remove all injection nozzles from the cylinder head.

NOTE:

Cover all mounting holes and injection pipes to prevent the entry of dust and dirt.

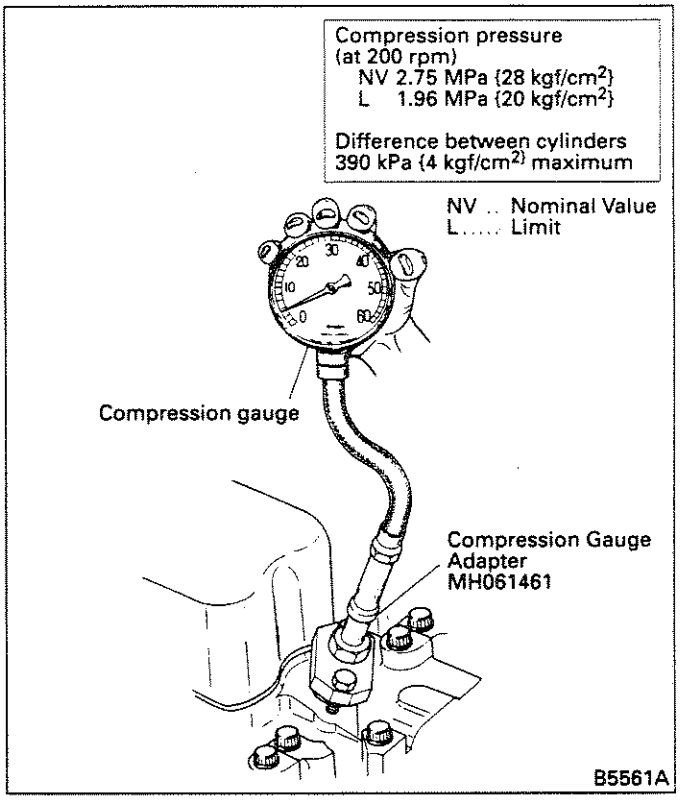

(3) Mount the Compression Gauge Adapter (special tool) onto an injection nozzle hole together with a gasket. Connect the compression gauge.

(4) To prevent fuel from being pumped into the cylinder by the injection pump, pull the injection pump governor's stop lever fully in the "stop" direction.

(5) Turn the engine over with the starter and measure the compression pressure at 200 rpm.

NOTE:

1. **Be sure to measure at the correct engine speed since changes in engine speed cause changes in compression pressure.**
2. **Since wear and other factors vary from one cylinder to another, measure the compression pressure in every cylinder.**

5.2 Cylinder Head and Valve Mechanism

5.2.1 Disassembly

<6D22, 22-T, 22-TC>

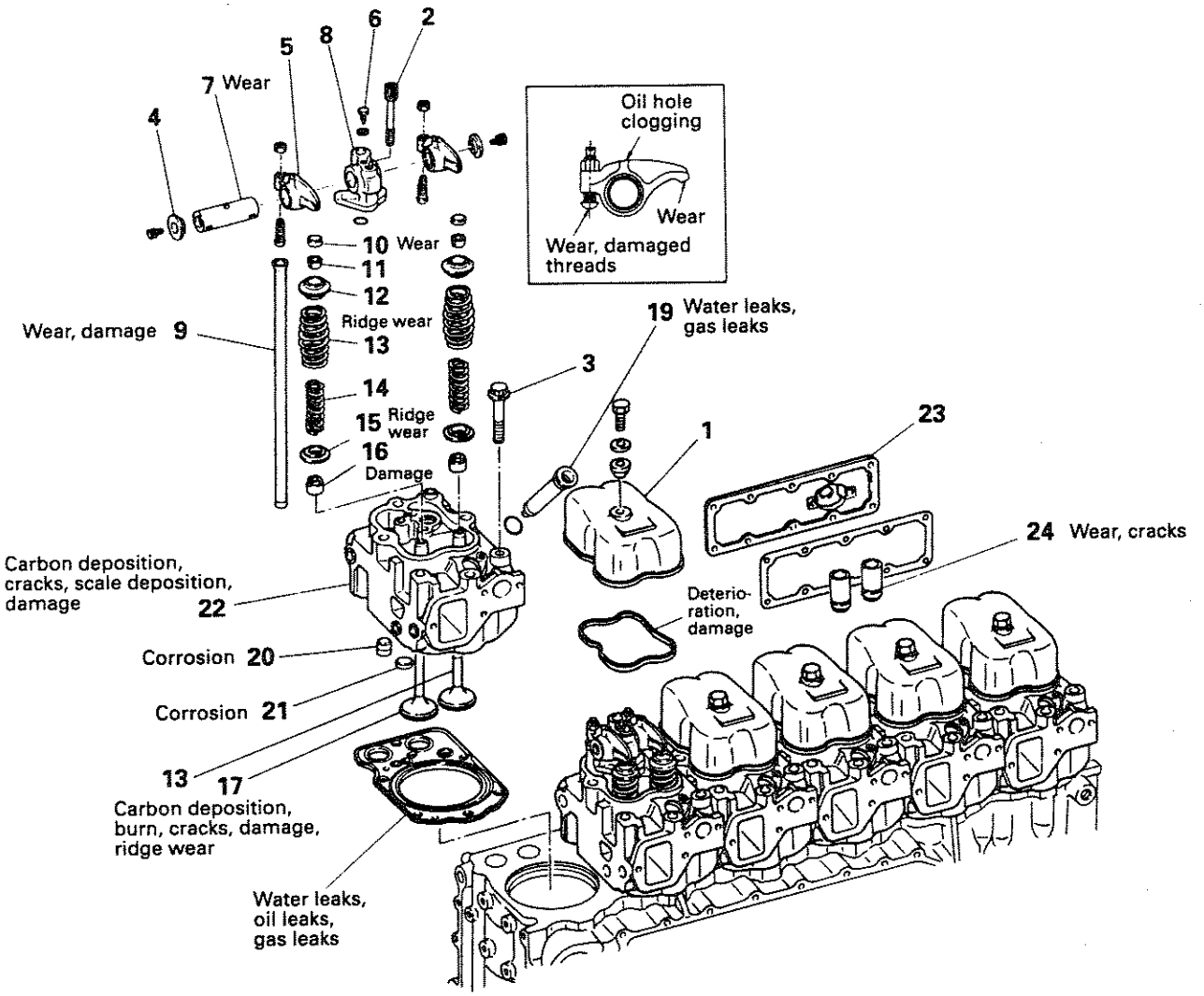

Disassembly sequence

1 Rocker cover
2 Rocker shaft bracket mounting bolt
3 Cylinder head bolt
4 Thrust plate
5 Rocker
6 Set screw
7 Rocker shaft
⑧ Rocker shaft bracket
9 Push rod
10 Valve cap
⑪ Valve cotter
12 Upper retainer
13 Outer valve spring
14 Inner valve spring
15 Lower retainer
*1 16 Valve stem seal
17 Inlet valve
18 Exhaust valve
*2 ⑲ Nozzle tube
*2 20 Water director
*2 21 Sealing cap
㉒ Cylinder head
23 Crankcase side cover
24 Tappet

For parts wit circled numbers, refer to the following section, "Disassembly Procedure".
Parts marked with "*1" should be replaced and not reused, even if only the valve is removed.
Parts marked with "*2" should not be removed unless defects are evident.

C1542A

<6D24-T, 24-TC>

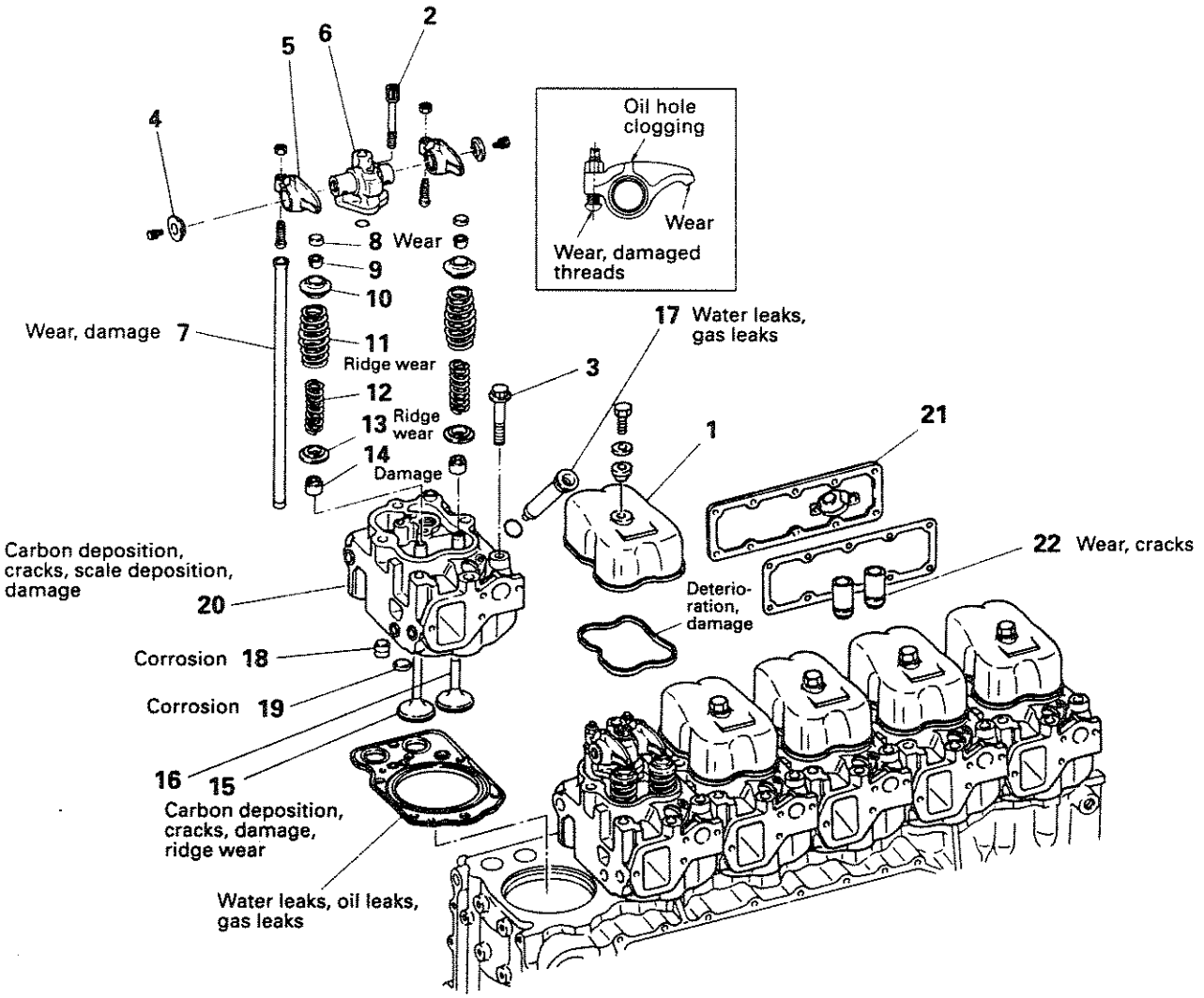

Disassembly sequence

1 Rocker cover
2 Rocker shaft bracket mounting bolt
3 Cylinder head bolt
4 Thrust plate
5 Rocker
⑥ Rocker shaft bracket
7 Push rod
8 Valve cap
⑨ Valve cotter
10 Upper retainer
11 Outer valve spring
12 Inner valve spring
13 Lower retainer
*1 14 Valve stem seal
15 Inlet valve
16 Exhaust valve
*2 ⑰ Nozzle tube
*2 18 Water director
*2 19 Sealing cap
⑳ Cylinder head
21 Crankcase side cover
22 Tappet

For parts with circled numbers, refer to the following section, "Disassembly Procedure."
Parts marked with "*1" should be replaced and not reused, even if only the valve is removed.
Parts marked with "*2" should not be removed unless defects are evident.

13208

Disassembly Procedure

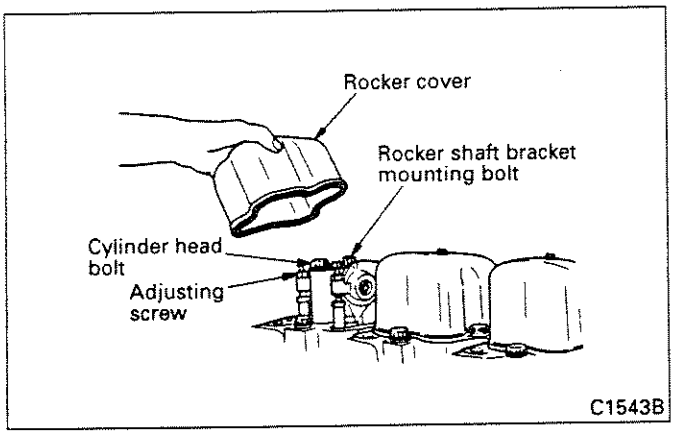

(1) Before removing the bolts, loosen the adjusting screw on every rocker that is being pushed up by its push rod.

(2) Removing rocker shaft bracket assembly

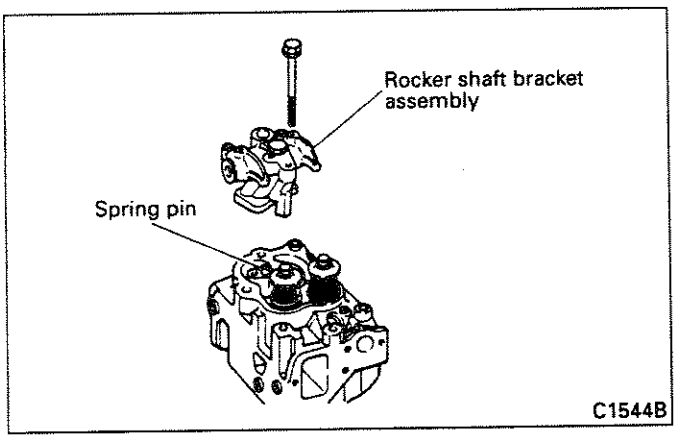

The rocker shaft bracket assembly is held in place in the cylinder head by a spring pin. To remove the assembly, lift it straight upward.

(3) Removing cylinder head assembly

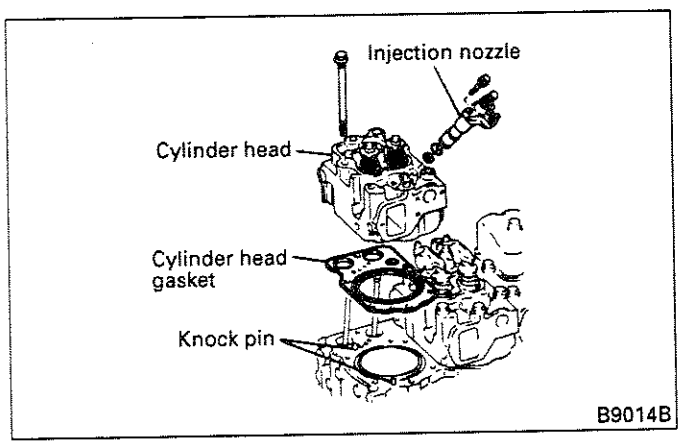

The cylinder head is located on the top surface of the crankcase by dowel pins. To remove the cylinder head, lift it straight upward.

NOTE:

1. **Remove the injection nozzles before taking off the cylinder head. (Refer to Group 13, Fuel and Engine Control.) If the cylinder head is placed on a work bench with the nozzles still mounted, the ends of the nozzles projecting from the bottom of the cylinder head will be damaged.**
2. **When removing the cylinder head gasket, take care not to scratch or dent the cylinder head and crankcase mounting surfaces.**

(4) Removing valve cotters

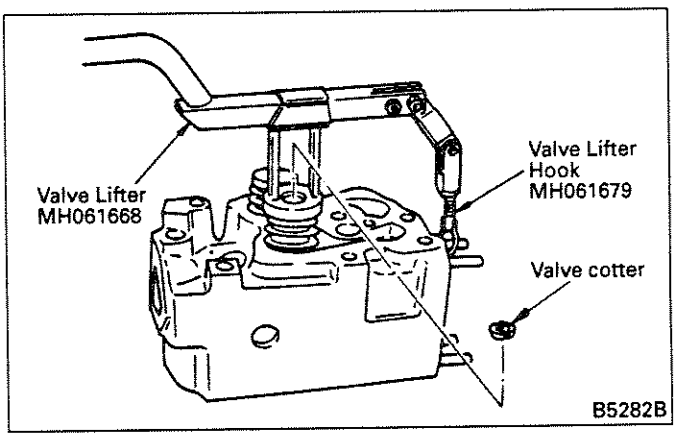

To remove the valve cotters, use the Valve Lifter and Valve Lifter Hook (special tools) to evenly compress the valve springs.

(5) Removing nozzle tubes

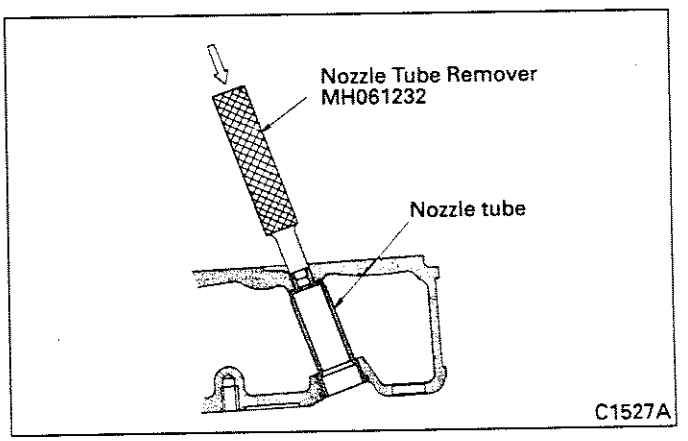

NOTE:
Whenever a nozzle tube is removed, it must be replaced with a new one.

5.2.2 Inspection

Item		NV	L
Free length	Outer valve spring	89.38	85
	Inner valve spring	65.04	62
Installed load/installed length	Outer valve spring	450 N {46.1 kgf}/58.35	380 N {39 kgf}/58.35
	Inner valve spring	115 N {12 kgf}/50.35	100 N {10.2 kgf}/50.35
Inner valve spring squareness		–	2.5

BD .. Basic Diameter
NV .. Nominal Value
L..... Limit

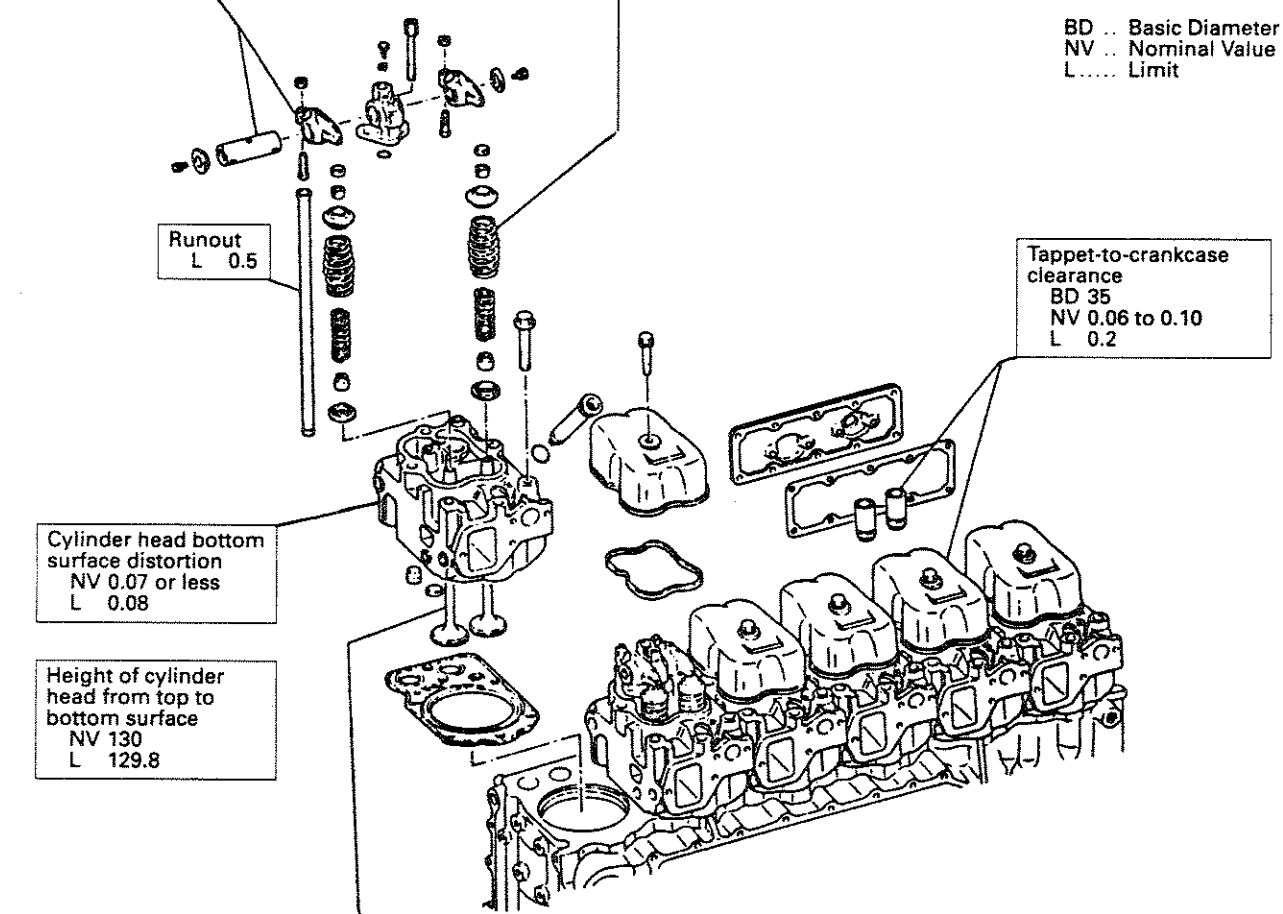

Item		BD	NV	L
Valve stem O. D.	Inlet valve	–	11.95 to 11.96	11.85
	Exhaust valve	–	11.91 to 11.93	
Valve stem-to-valve guide clearance	Inlet valve	12	0.05 to 0.09	0.2
	Exhaust valve	12	0.09 to 0.12	
Valve seat insert seat width	Inlet valve	–	2.69 to 2.96	3.5
	Exhaust valve			
Valve sinkage from cylinder head bottom surface	Inlet valve	–	0.25 to 0.75	1.0
	Exhaust valve	–	–0.05 to 0.45	0.7
Valve margin	Inlet valve	–	2.2	1.7
	Exhaust valve	–	2.5	2.0
Valve seat angle		–	45°	–

C2757B

Inspection Procedure

(1) Rocker bushing-to-rocker shaft clearance

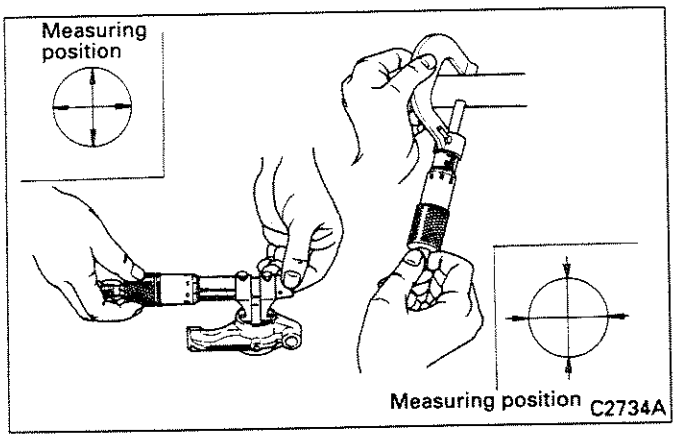

If the clearance exceeds the specified limit, replace the rocker bushing.

(2) Replacing rocker bushing

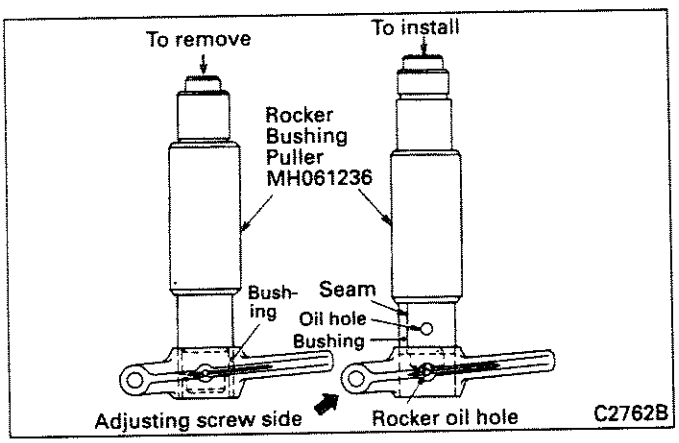

When installing a bushing, face the bushing's seam toward the rocker adjusting screw and align the bushing and rocker oil holes.

(3) Inspecting valve springs

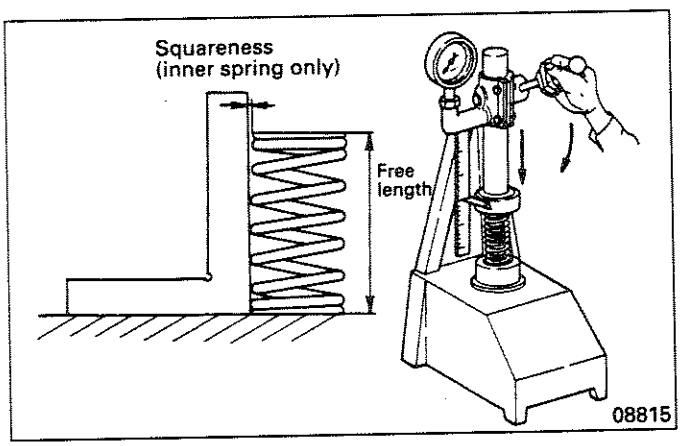

Measure the free length and installed load of each valve spring. Replace any spring that is not up to specification. With inner springs, check also for squareness.

(4) Tappet-to-crankcase tappet hole clearance

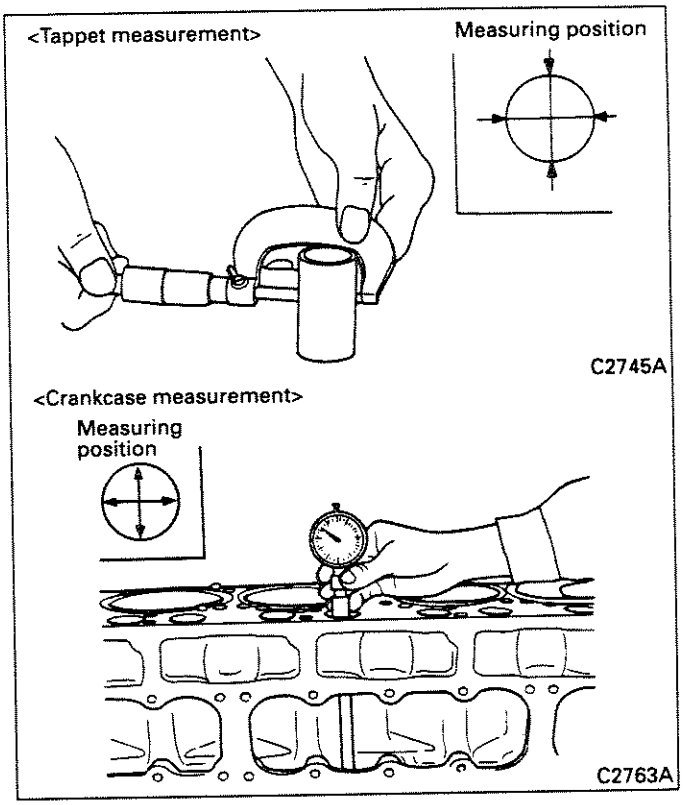

If the clearance exceeds the specified limit, replace the tappet.

(5) Push rod runout

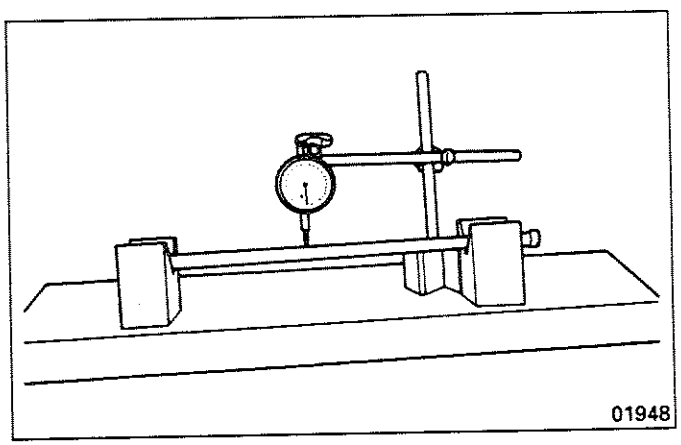

Check for runout and replace the push rod if the dial reading exceeds the specified limit.

(6) Cylinder head bottom surface distortion

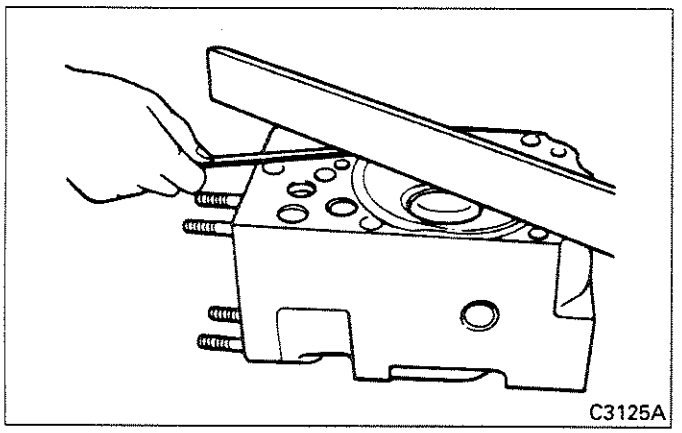

If distortion exceeds the specified limit, correct it using a surface grinder.

NOTE:

Replace the cylinder head if grinding causes the height from its top surface to bottom surface to fall below 129.8 mm.

(7) Valve stem outside diameter

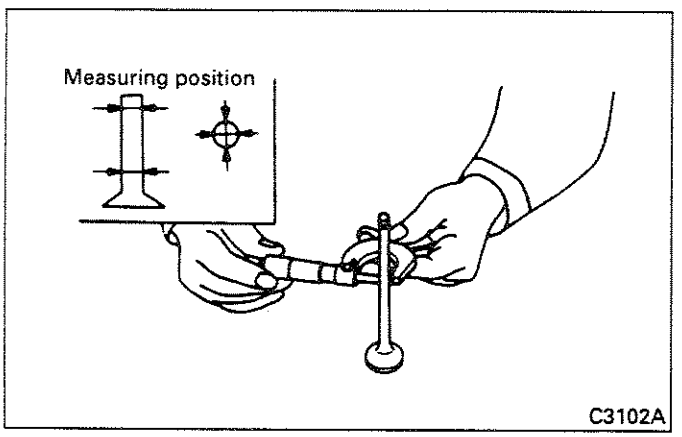

Replace the valve if its stem's outside diameter is below specification or if it is severely worn.

(8) Valve stem-to-valve guide clearance

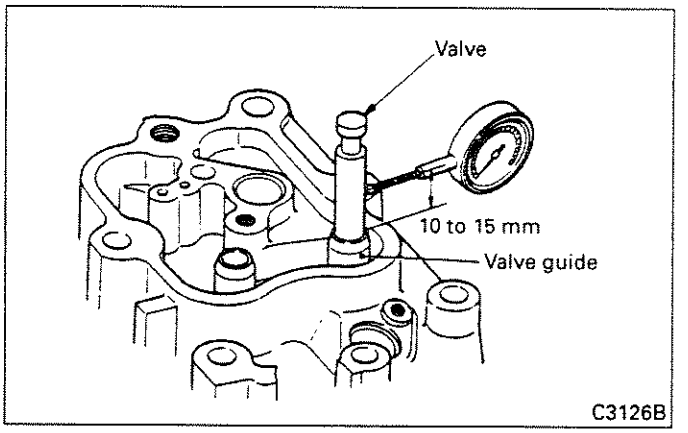

Insert the valve in the valve guide and measure the play at the specified distance from the valve guide's top (as illustrated). If the amount of play exceeds the specified limit, replace the valve guide.

(9) Replacing valve guide

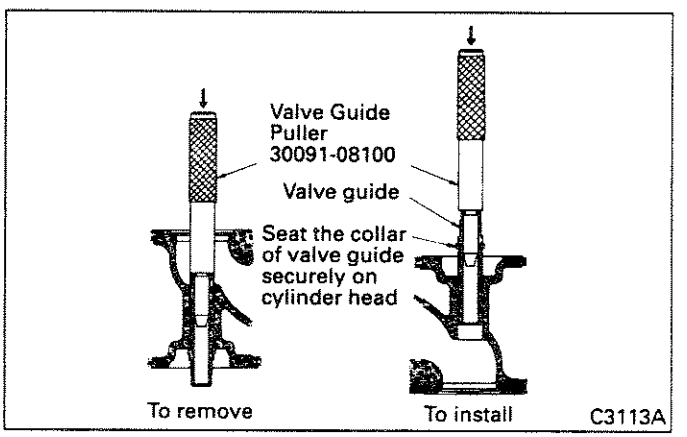

To install a valve guide, insert it with the Valve Guide Puller (special tool) until its flange sits securely on the cylinder head.

(10)Contact between valve and valve seat insert

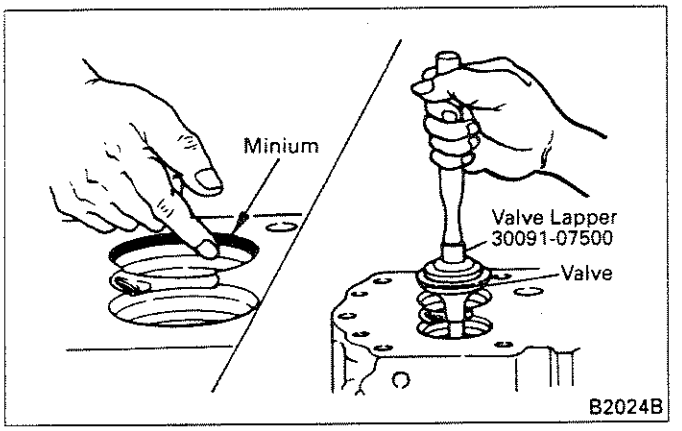

(a) Apply an even coat of minium to the valve seat insert surface that comes into contact with the valve.
(b) Using the Valve Lapper (special tool), strike the valve against the valve seat insert once.

NOTE:
1. **Do not turn the valve when striking it against the valve seat insert.**
2. **The contact pattern should be checked whenever a valve guide is inspected or replaced.**

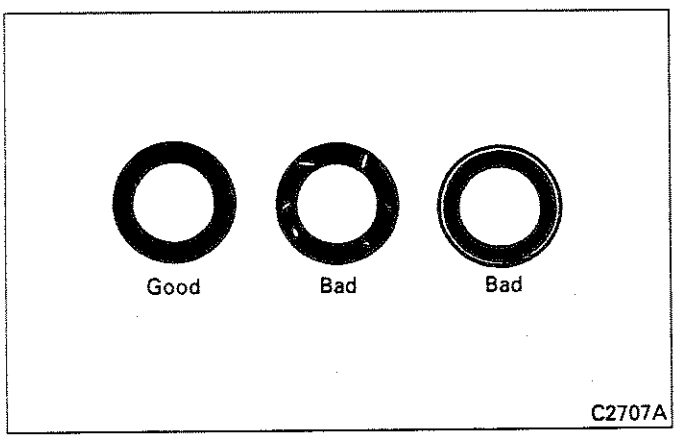

If the minium indicates a poor contact pattern, rectify it as follows:

Minor defect: Lapping
Serious defect: Rectify valve and valve seat

(11)Rectifying valve face

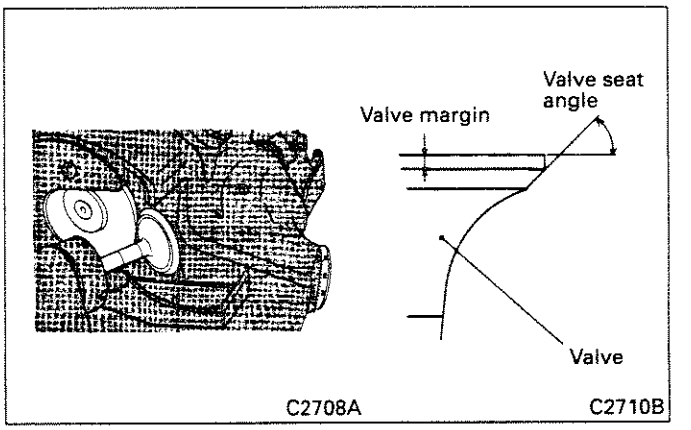

With a valve refacer, grind the valve face to achieve the specified valve seat angle.

NOTE:
1. **Keep grinding to a minimum.**
2. **If the valve margin is below specification after grinding, replace the valve.**
3. **After grinding, be sure to lap the valve and valve seat insert. [See item (14) for details].**

(12)Rectifying valve seat insert

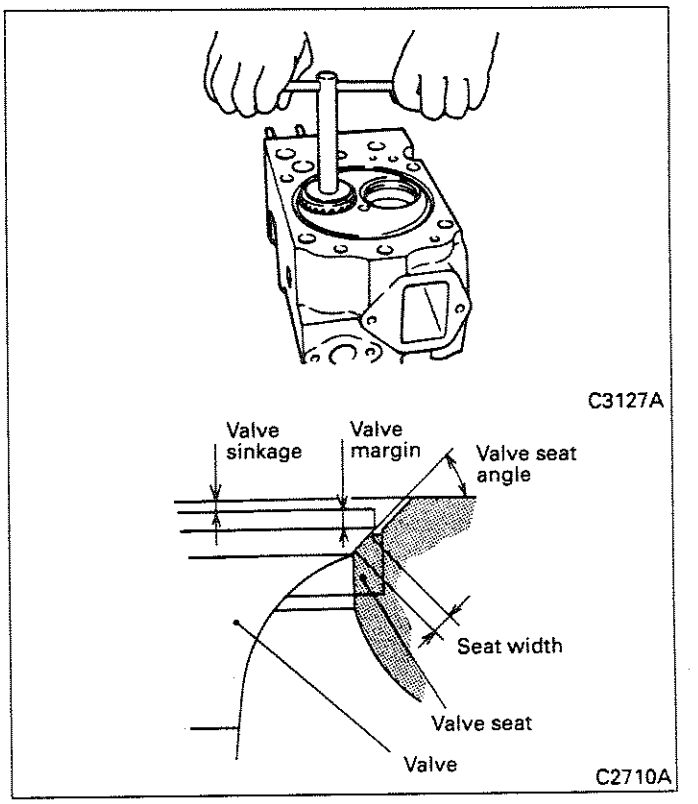

(a) Using a valve seat cutter, cut the insert to achieve the specified valve seat angle and seat width. Use a 15° or 75° cutter first, followed by a 45° cutter.

NOTE:

1. **Keep cutting to a minimum.**
2. **If the valve sinkage exceeds the specified limit after cutting, replace the valve seat insert.**

(b) After cutting, put some sandpaper of around #400 grade between the cutter and valve seat insert and grind the valve seat insert lightly.

NOTE:

After rectification, be sure to lap the valve and valve seat insert. [Refer to item (14) for details.]

(13) Replacing valve seat insert

Valve seats are installed by expansion fitting and should therefore be replaced according to the following procedure.

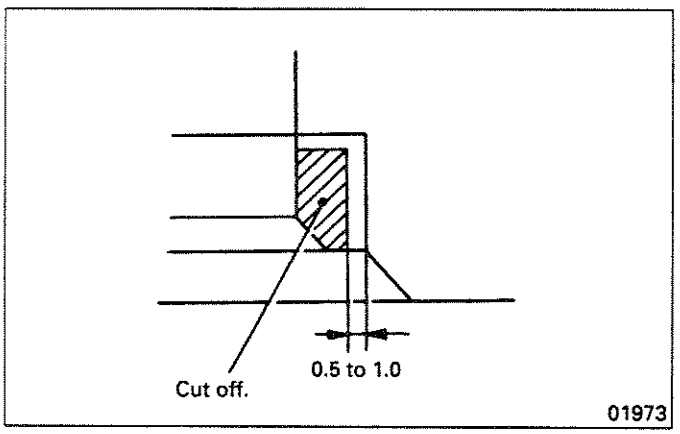

(a) Grind the inside surface of the valve seat insert to reduce its thickness. Remove the valve seat insert at room temperature.

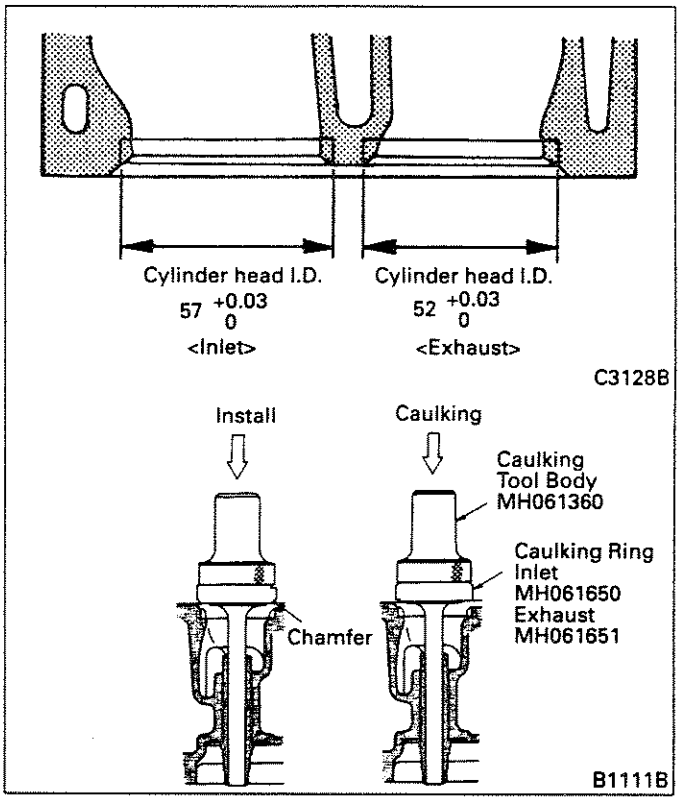

(b) Check that there is sufficient interference between the cylinder head and valve seat insert.

(c) Cool the valve seat insert by immersing it in liquid nitrogen. Heat the cylinder head.

(d) Install the valve seat insert using the Caulking Tool Body and Caulking Ring (special tools), and caulk the periphery of the valve seat insert.

NOTE:

When installing the valve seat insert, ensure that the chamfered side of the Caulking Ring faces the valve seat insert.

(e) Reface the valve seat insert to achieve the specified seat width and valve sinkage. [See item (12) for details.]

(14) Lapping valve and valve seat insert

Contact between the valve and valve seat insert must be even over the entire contact area. Lapping should be carried out whenever the valve or valve seat insert has been rectified or replaced.

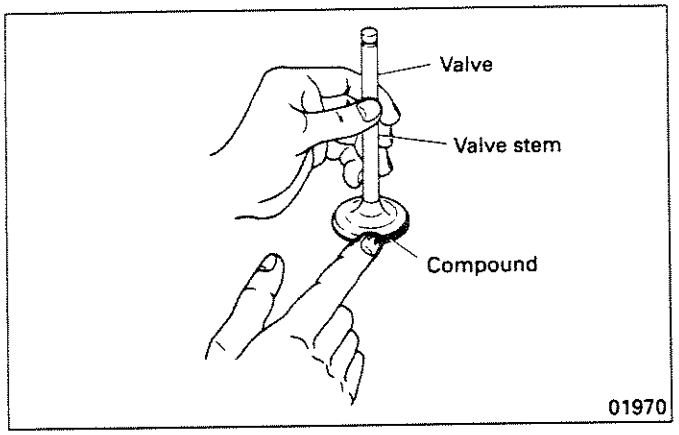

(a) Apply a thin, even coat of lapping compound to the seating surface of the valve.

NOTE:

1. **Ensure that no compound adheres to the valve stem.**
2. **Start with intermediate-mesh compound (120 to 150 mesh), and finish with fine-mesh compound (200 mesh or more).**
3. **The addition of a small amount of engine oil makes lapping compound easier to apply.**

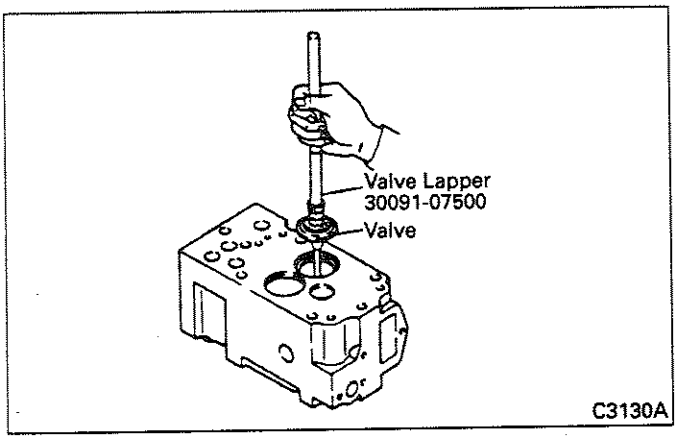

(b) Using the Valve Lapper (special tool), lightly strike the valve against the valve seat insert while turning it little by little.

(c) Wash away the compound with gas oil or a similar fluid.

(d) Apply engine oil to the contact surfaces and rub it in so that the contact surfaces are lubricated and mate together snugly.

(e) Check that the valve is properly seated. [Refer to item (10) for details.]

5.2.3 Reassembly

<6D22, 22-T, 22-TC>

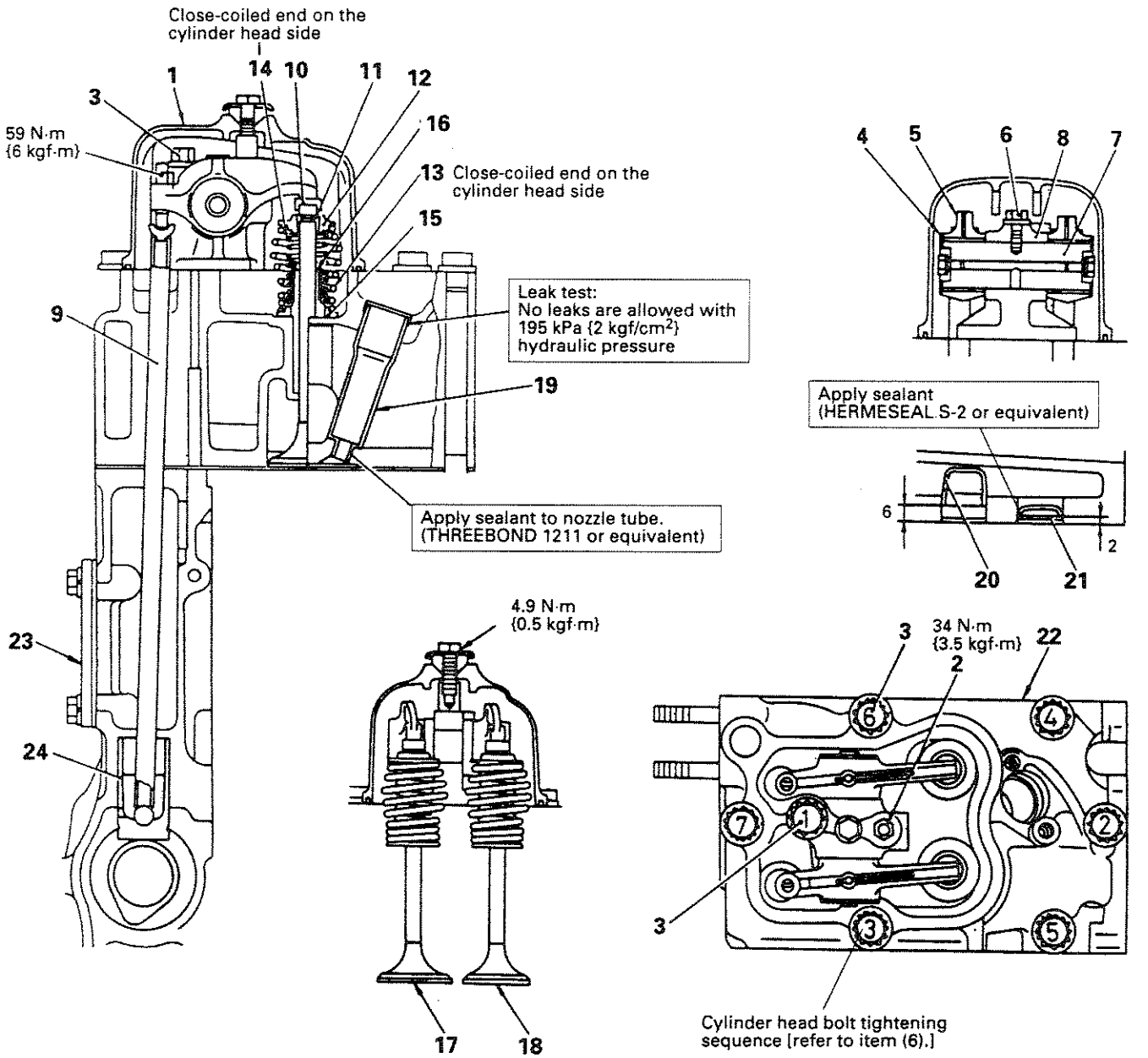

Assembly sequence

㉒→⑳→㉑→⑲→⑯→15→14→13→12→⑪→10→
18→17 24→23

9→⑧→7→6→5→4→③→2→1

For parts with circled numbers, refer to the following section, "Reassembly Procedure."

C6641E

<6D24-T, 24-TC>

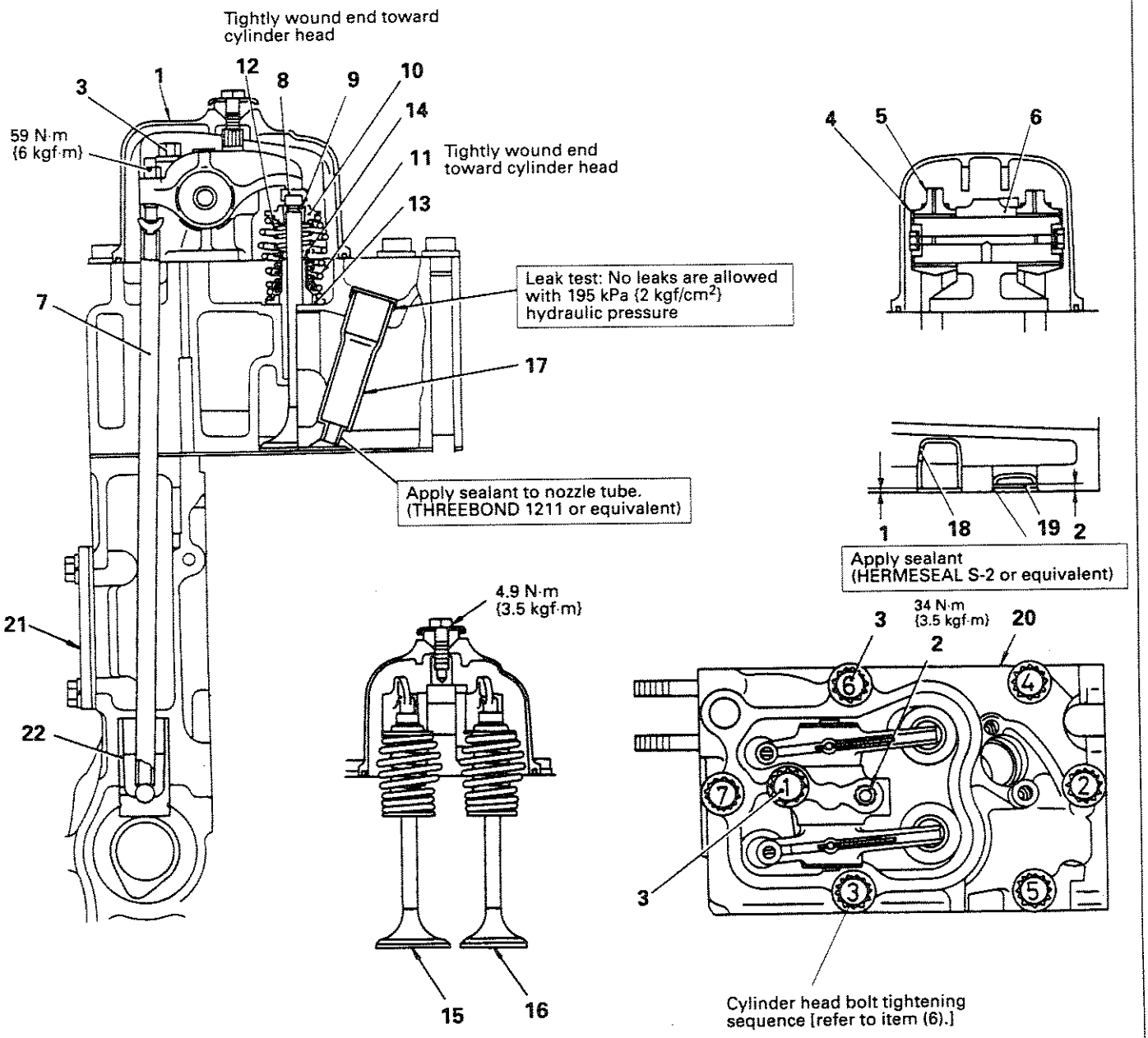

Assembly sequence

⑳→⑱→⑲→⑰→⑭→13→12→⑨→8→7→6→5→4→3→2→1
16→15 ↑ 22→21 ↑

For parts with circled numbers, refer to the following section, "Reassembly Procedure."

10369

Reassembly Procedure

(1) Water director and sealing cap installation

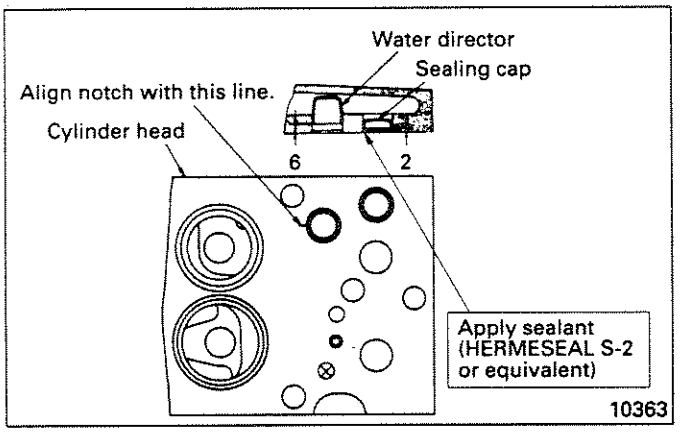

Align each water director with the notch provided, as shown in the illustration.

(2) Nozzle tube installation

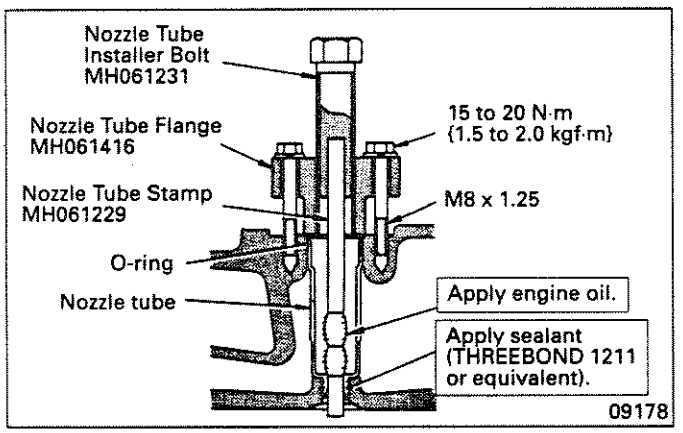

(a) Clean the cylinder head nozzle tube holes. Take care to remove dirt, oil, water and carbon deposits from the seating surfaces.
(b) Apply sealant to the new nozzle tube, and insert the nozzle tube into the cylinder head.
(c) Using the Nozzle Tube Installer Flange (special tool), press the nozzle tube into the cylinder head.
(d) Apply engine oil to the Nozzle Tube Stamp (special tool) and insert it into the nozzle tube.
(e) Screw in the Nozzle Tube Installer Bolt (special tool) until the Nozzle Tube Stamp can be pulled out of the bottom of the cylinder head.
(f) After installing the nozzle tube, carry out a leak test to verify air-tightness.

(3) Valve stem seal installation

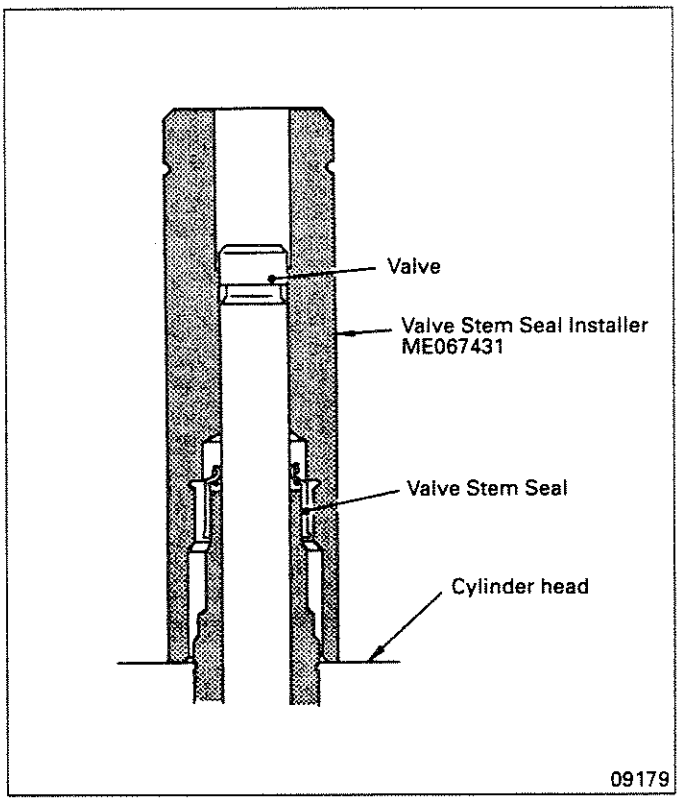

To install a valve stem seal, first apply engine oil to the seal lip. Then, push in the seal using the Valve Stem Seal Installer (special tool), striking the tool until it touches the cylinder head.

NOTE:

1. **When installing a valve, apply a small amount of engine oil to its stem.**
2. **After installing a valve stem seal, check that its spring has not been deformed or damaged.**

(4) Valve cotter installation

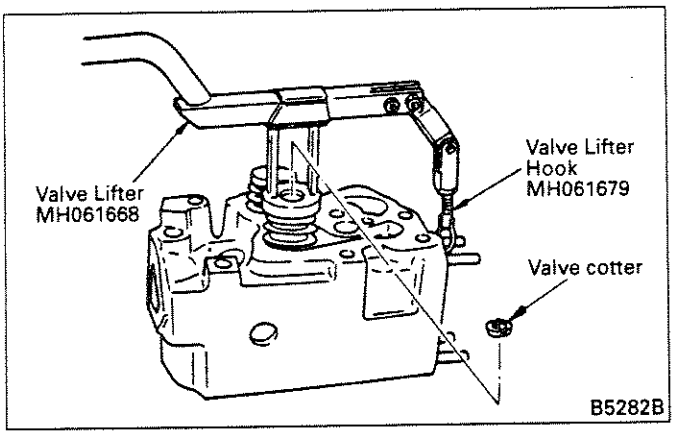

Install the valve cotter while evenly compressing the spring using the Valve Lifter and Valve Lifter Hook (special tools).

NOTE:
Valve springs must be installed with their tightly wound portions toward the cylinder head.

(5) Mounting rocker shaft bracket and cylinder head

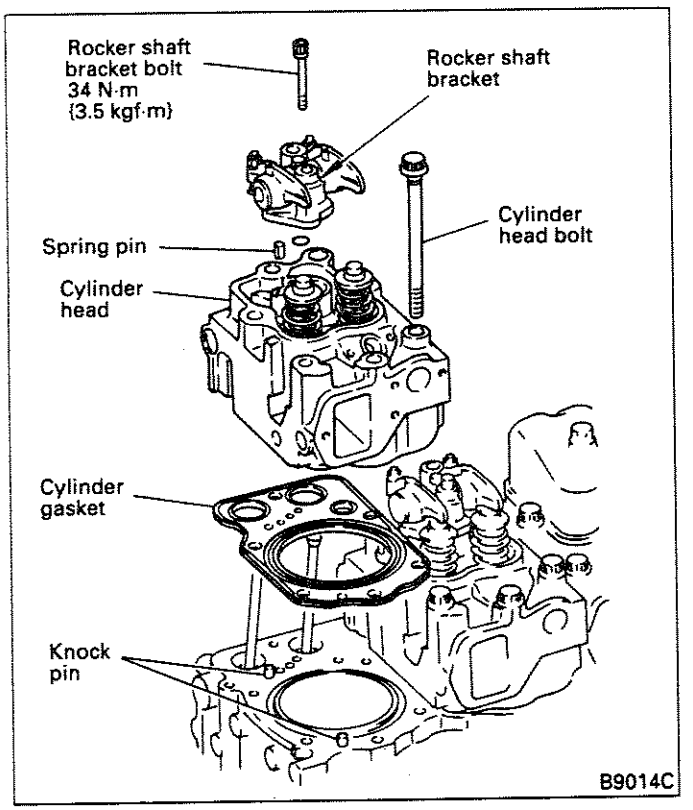

Install the rocker shaft bracket by positioning it on the spring pin in the cylinder head. Mount the cylinder head by positioning it on the dowel pins in the crankcase.

(6) Tightening cylinder head bolts

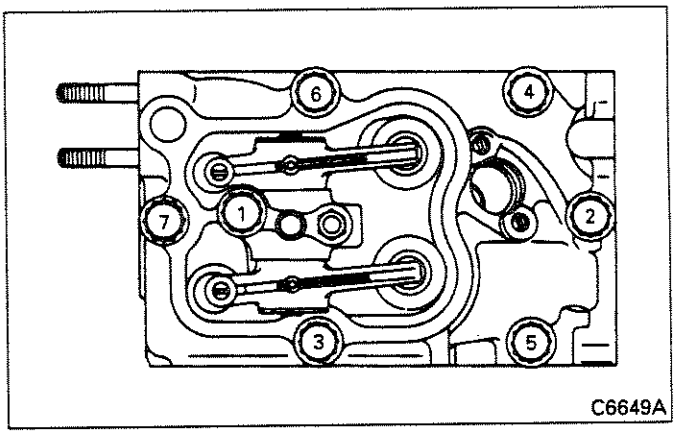

Tighten the cylinder head bolts to 175 N·m {18 kgf·m} (wet) in the order shown.
After confirming that the bolts are tightened to 175 N·m {18 kgf·m}, give each one an extra turn in accordance with the following procedure.

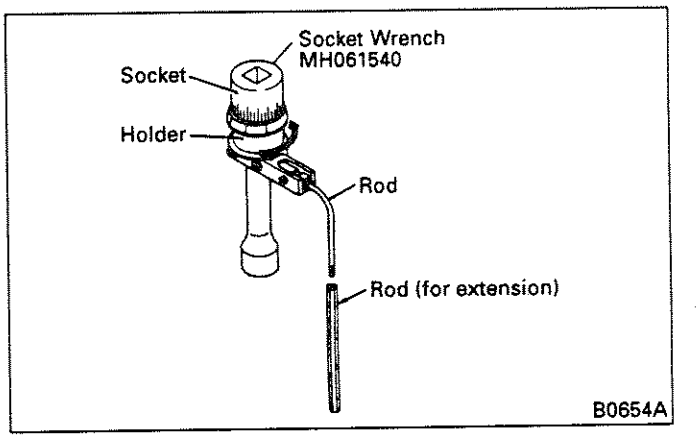

(a) Before fitting the Socket Wrench (special tool) over a cylinder head bolt, turn the holder counter-clockwise to tension the built-in socket spring.

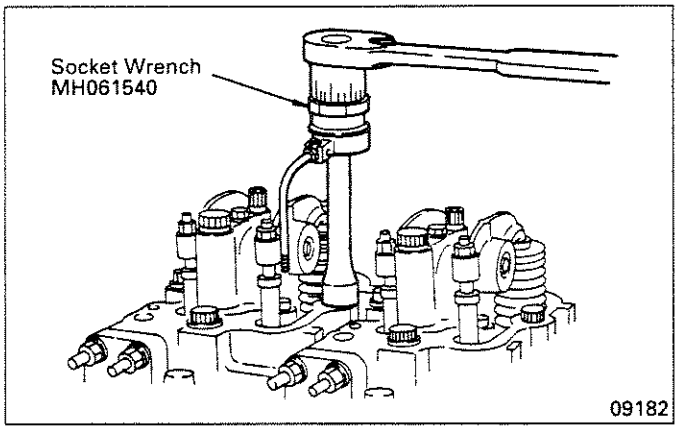

(b) Fit the socket over the cylinder head bolt and set it such that the built-in spring forces the rod against the rocker shaft bracket, an injection pipe, or another nearby part.

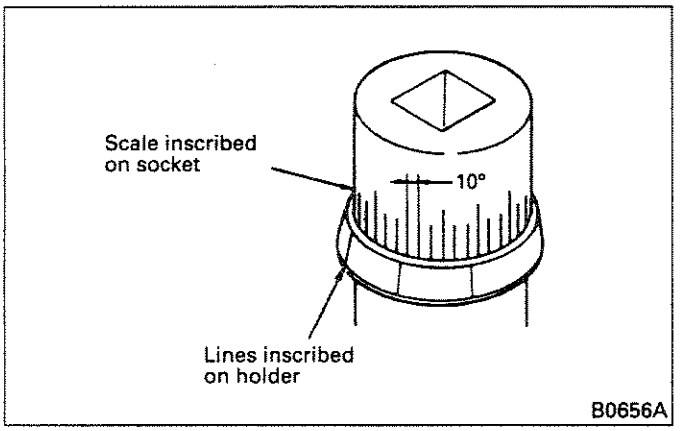

(c) Observing the inscribed lines on the holder and socket, turn the socket clockwise by 90 to 110° (1 pitch = 10°) to fully tighten the bolt.

5.3 Flywheel, Timing Gears, and Camshaft

5.3.1 Disassembly

<With axial-lip-type oil seal>

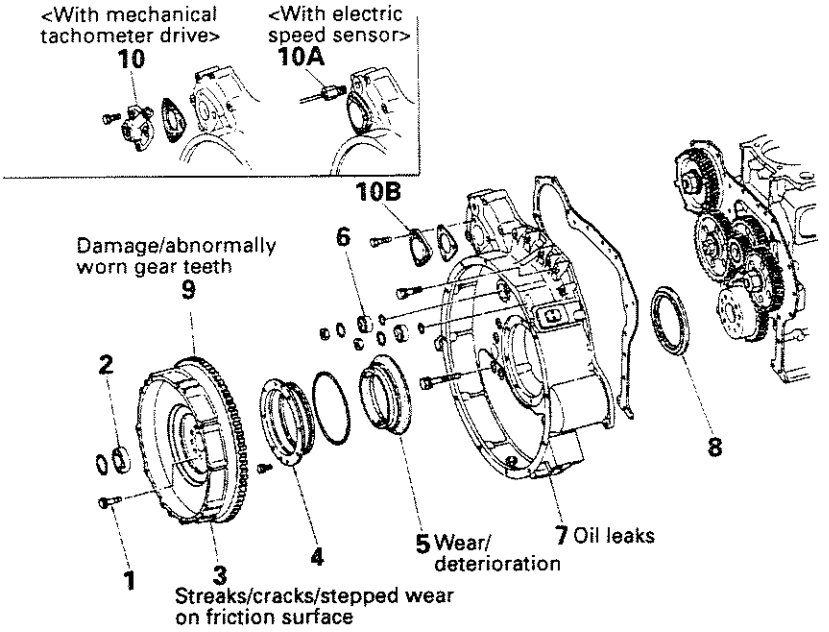

<With radial-lip-type oil seal>

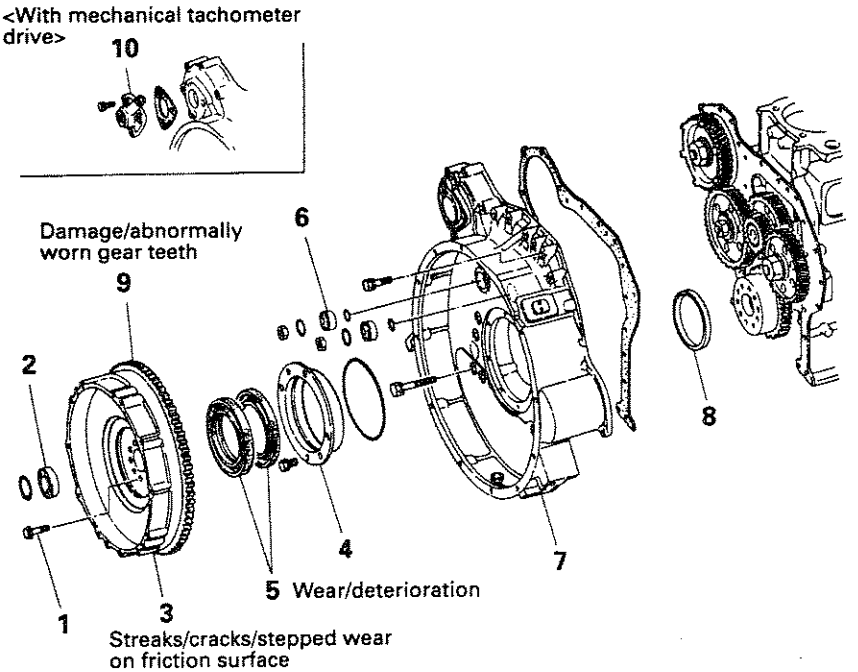

C1926F

Disassembly sequence

1 Flywheel mounting bolt
*2 Pilot bearing
③ Flywheel
④ Oil seal retainer
5 Oil seal
⑥ Collar
7 Flywheel housing
*8 Rear oil seal slinger <models with axial-lip-type oil seal only> Sleeve <models with wet type clutch only>
*⑨ Ring gear
10 Tachometer drive
*10A Speed sensor
10B Cover

For parts with circled numbers, refer to the following section, "Disassembly Procedure."
Parts marked with "*" should not be removed unless defects are evident.

C1926L

✻ Timing gear backlash

Item	NV	L
Between crankshaft gear and idler gear B	0.08 to 0.20	0.4
Between idler gear A and camshaft gear	0.07 to 0.18	0.4
Between idler gear A and idler gear C	0.07 to 0.18	0.4
Between injection pump gear and idler gear C	0.08 to 0.20	0.4

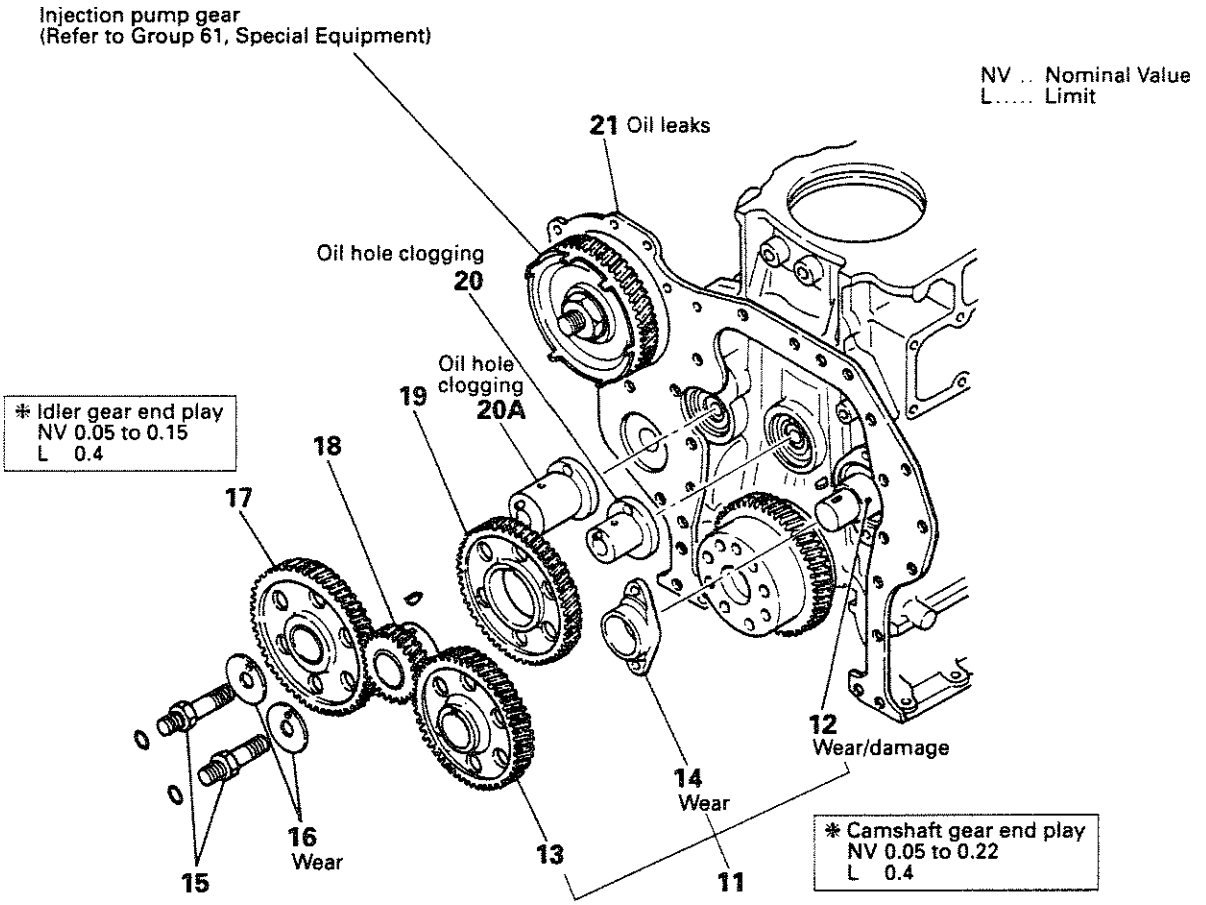

Disassembly sequence

⑪ Camshaft assembly	15 Idler shaft bolt	19 Idler gear B
*⑫ Camshaft	16 Thrust plate	20 Idler shaft A
*⑬ Camshaft gear	17 Idler gear C	20A Idler shaft C
14 Thrust plate	18 Idler gear A	*21 Rear plate

For parts with circled numbers, refer to the following section, "Disassembly Procedure."
Parts marked with "✻" should be inspected prior to disassembly.
Parts marked with "*" should not be removed unless defects are evident.

C1927D

Disassembly Procedure

(1) Removing flywheel

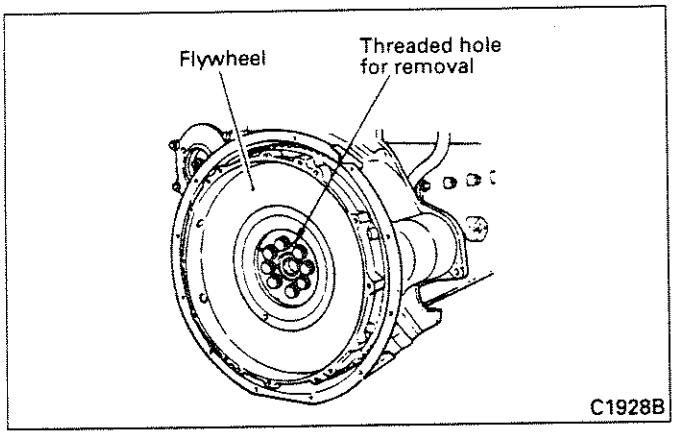

To remove the flywheel, screw its mounting bolts into the threaded removal hole.

(2) Removing collar and oil seal retainer

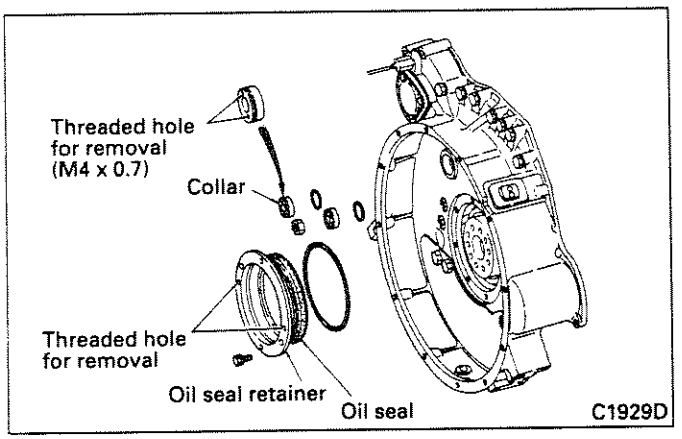

- To remove the collar, screw M4 x 0.7 bolts into the threaded removal holes.
- To remove the oil seal retainer, screw its mounting bolts into the threaded removal holes. Remove the oil seal retainer with the oil seal attached.

(3) Removing ring gear

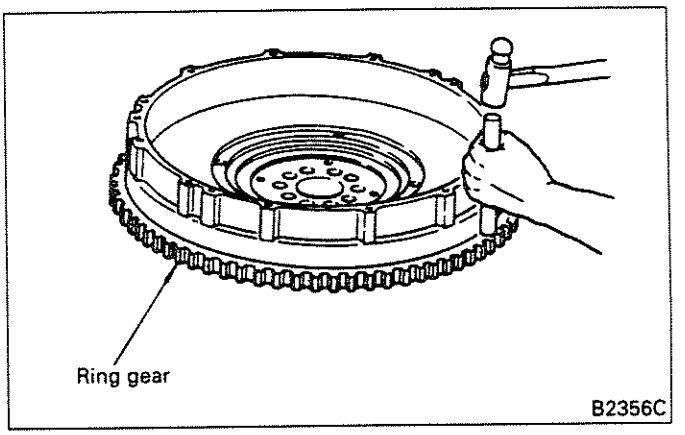

To remove the ring gear, heat it evenly with an acetylene torch, then tap around its entire periphery with a hammer and rod.

(4) Measuring gear backlash

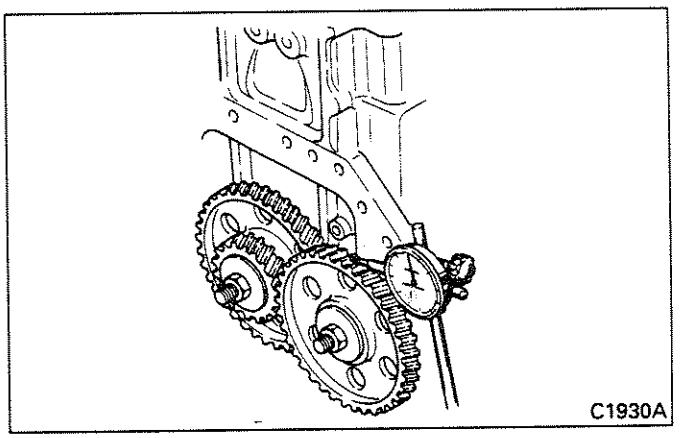

If backlash exceeds the specified limit, inspect the idler gear bushings and gears, and replace parts as required.

NOTE:

For any pair of gears, measure backlash at more than 3 points to determine whether it is acceptable.

(5) Measuring idler gear and camshaft gear end play

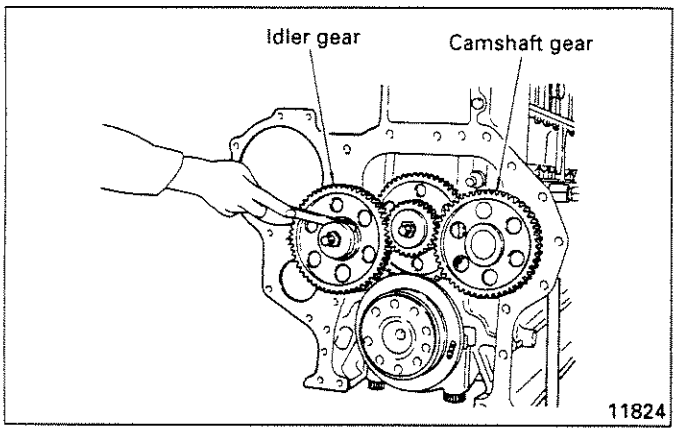

If the end play exceeds the specified limit, replace the thrust plate.

(6) Removing camshaft

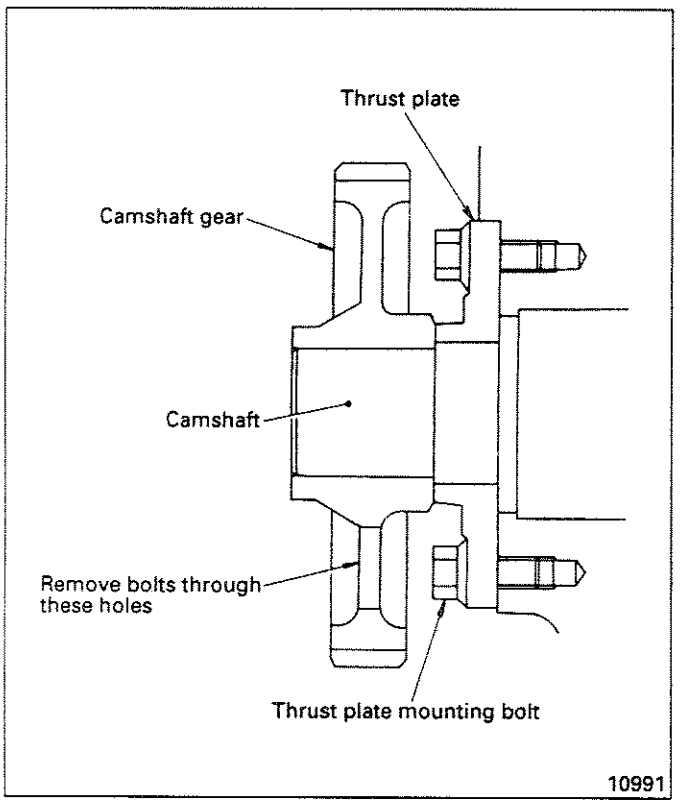

Remove the thrust plate mounting bolts via the holes in the camshaft gear. Remove the camshaft together with the camshaft gear and thrust plate.

(7) Removing camshaft gear

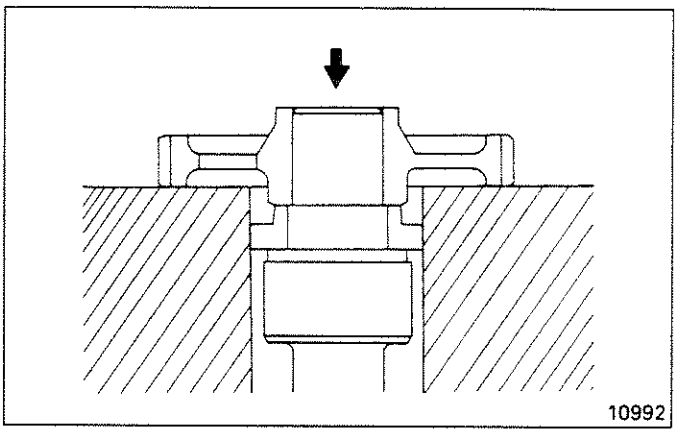

To remove the camshaft gear, push out the camshaft using a press.

NOTE:

Do not attempt to remove the gear by striking it with a hammer. Be sure to use a press.

5.3.2 Inspection

Item	NV	L
Friction surface distortion	0.1 or less	0.2
Distance from clutch cover mounting surface to friction surface	47.8 to 48.2	49.5

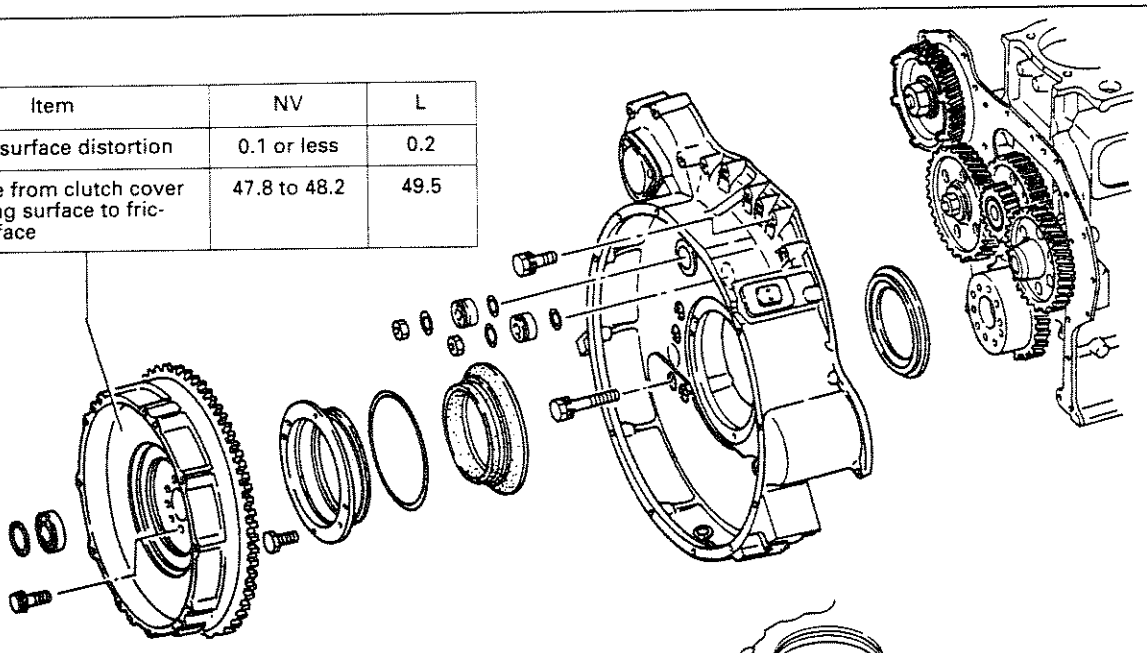

C2758F

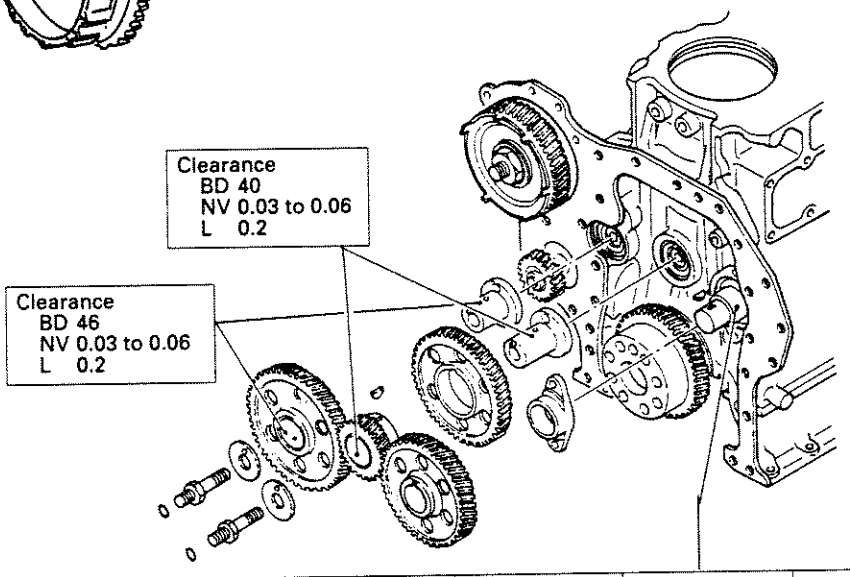

BD .. Basic Diameter
NV .. Nominal Value
L..... Limit

Item		BD	NV	L
Cam profile (difference between base circle diameter and lobe height)	Inlet	–	8.83	8.3
	Exhaust	–	8.82	8.3
Camshaft bend		–	0.05 or less	0.08
Camshaft journal-to-camshaft bushing clearance	No. 1	65.00	0.03 to 0.08	0.25
	No. 2	65.25		
	No. 3, 4	65.50		
	No. 5, 6	65.75		
	No. 7	66.00		
Camshaft gear-to-camshaft interference		40	0.02 to 0.05	Can be reassembled up to 3 times

C2759D

Inspection Procedure

(1) Friction surface distortion

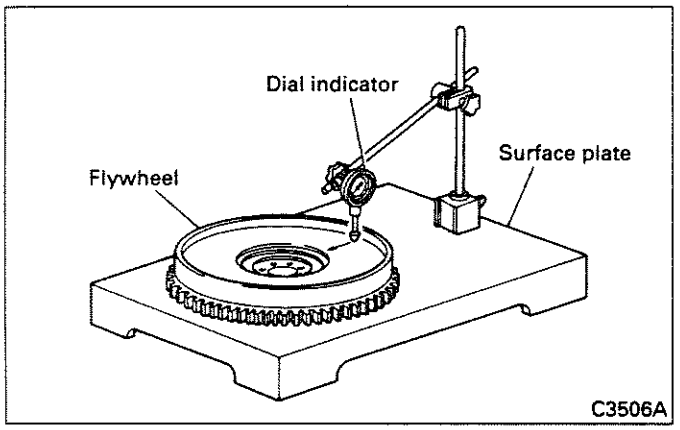

Place the flywheel on a surface plate. To measure distortion, pass a dial indicator over the flywheel from its periphery toward its center.
If distortion exceeds the specified limit, grind the friction surface as necessary.

NOTE:
If the ring gear appears abnormal in any way, replace it before measuring distortion. [For details, refer to item (3) of section 5.3.1.]

(2) Rectifying flywheel friction surface

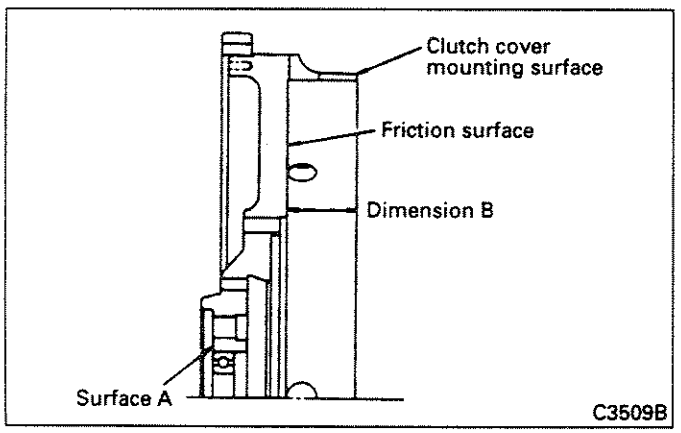

Grind the friction surface such that dimension B (the distance from the clutch cover mounting surface to the friction surface) is below the specified limit. The friction surface must be parallel with surface A to within 0.1 mm.
If dimension B exceeds the specified limit, replace the flywheel.

(3) Idler gear-to-idler shaft clearance

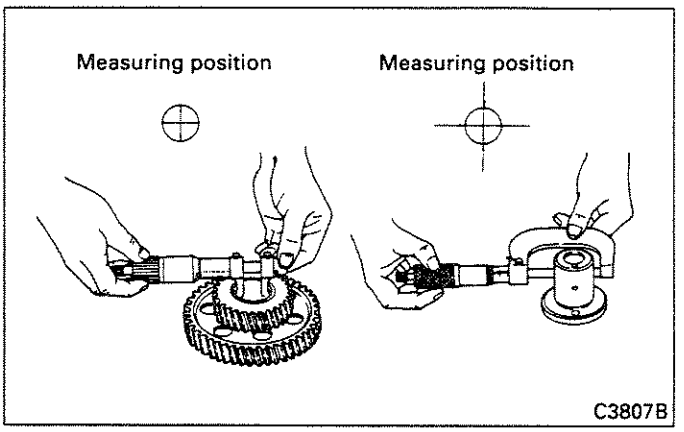

If the clearance exceeds the specified limit, replace the bushing in the idler gear.

(4) Replacing idler gear bushing

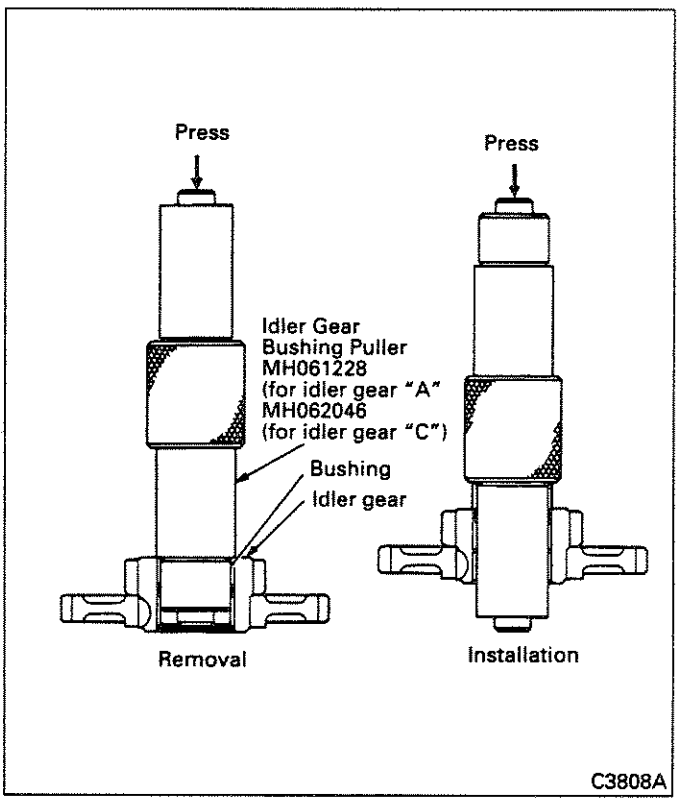

Install the bushing from the side of the idler gear whose internal diameter is chamfered.
After installation, confirm that the bushing-to-idler shaft clearance is within the nominal value. If the clearance is smaller than the nominal value, ream the bushing.

(5) Cam profile (difference between base circle diameter and lobe height)

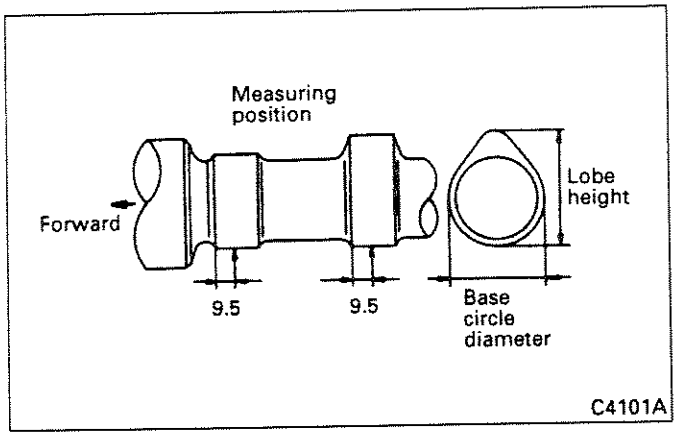

Measure the lobe heights and base circle diameters. Replace the camshaft if the difference between them is below the limit.

NOTE:
Since the cams are tapered, they must be measured at the points shown in the illustration.

(6) Camshaft journal-to-crankcase camshaft bushing clearance

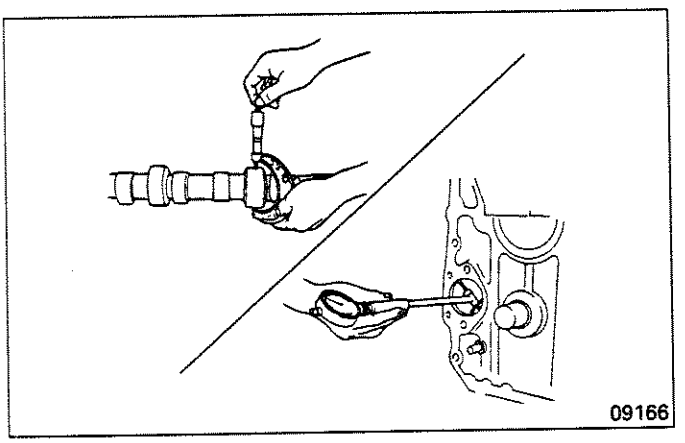

If the clearance exceeds the specified limit, replace the camshaft bushing. [Refer to item (7) for details.]

(7) Replacing camshaft bushings

(a) Removal
Remove the camshaft bushings in the following order: No.6 → No.5 → No.4 → No.3 → No.2 → No.1 → No.7. Remove them in accordance with the following instructions.

1) Removing camshaft bushings Nos. 6 to 1

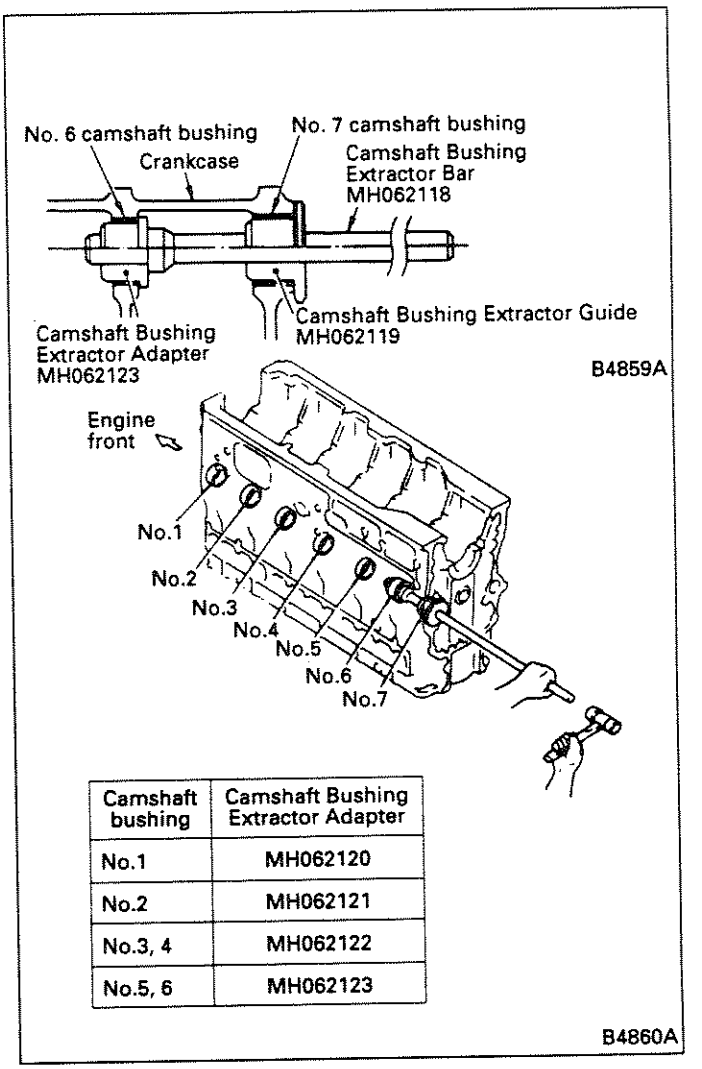

Camshaft bushing	Camshaft Bushing Extractor Adapter
No.1	MH062120
No.2	MH062121
No.3, 4	MH062122
No.5, 6	MH062123

a) Mount the Camshaft Bushing Extractor Adapter and Camshaft Bushing Extractor Guide (special tools) onto the Camshaft Bushing Extractor Bar (special tool). Insert this assembly into the crankcase. When doing this, fit the Guide onto the No. 7 camshaft bushing to support the Bar.

b) Hold the Camshaft Bushing Extractor Adapter against the No. 6 camshaft bushing. As shown in the illustration, remove the No. 6 bushing by striking the Bar with a hammer.

c) After removing the No. 6 bushing, remove bushings Nos. 5 to 1 in that order using the appropriate Camshaft Bushing Extractor Adapter for each one.

2) Removing camshaft bushing No. 7

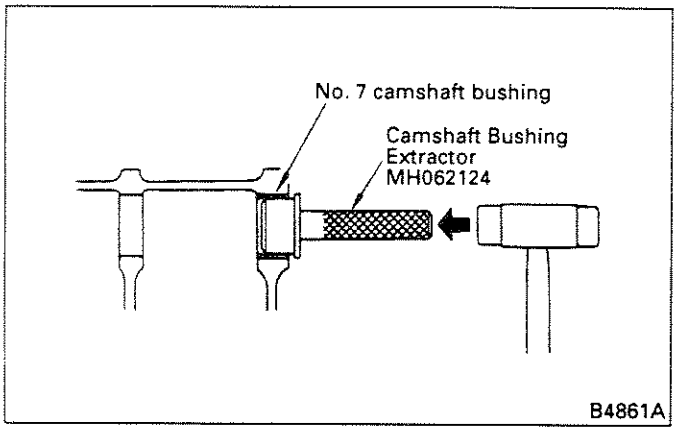

(b) Installation

In accordance with the following instructions, install camshaft bushings Nos. 2, 3, and 4 simultaneously, then bushings Nos. 5 and 6 simultaneously, then bushings Nos. 1 and 7 in that order.

1) Simultaneous installation of bushings Nos. 2, 3, and 4

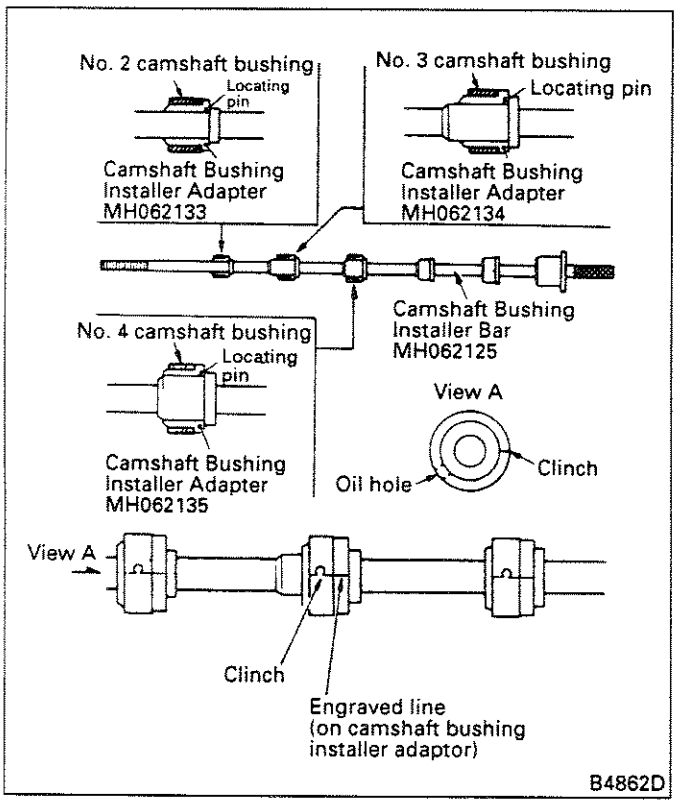

a) Mount the Camshaft Bushing Installer Adapters (special tool) and bushings Nos. 2 to 4 on the Camshaft Bushing Installer Bar (special tool). When doing this, align the inscribed lines on the Adapters with the clinches (seams) on the bushings and position the oil holes as shown in the illustration.

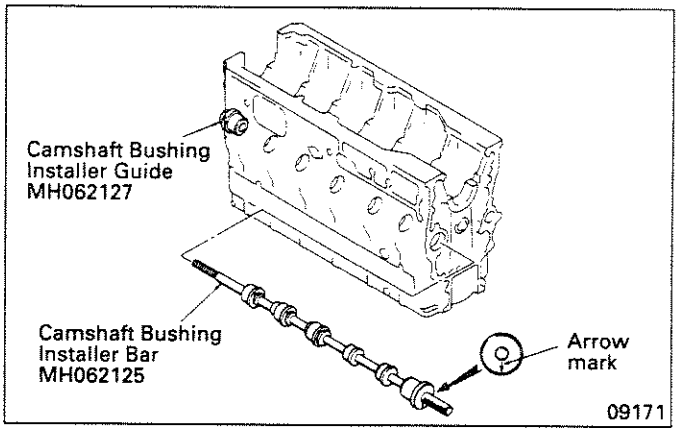

b) Fit the Camshaft Bushing Installer Guide (special tool) in the place where the No. 1 camshaft bushing is to be installed so that the Camshaft Bushing Installer Bar (special tool) may be supported by it. Then, insert the Camshaft Bushing Installer Bar into the crankcase, making sure that the arrow on it points toward the top of the crankcase.

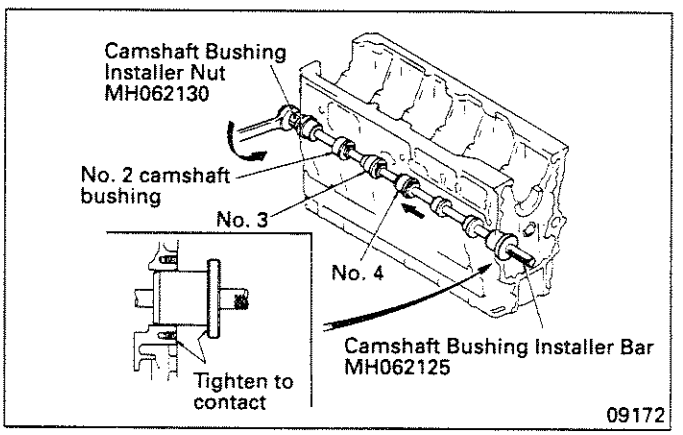

c) Confirm that the clinches (seams) on the bushings are aligned with the inscribed lines on the Camshaft Bushing Installer Adapters [refer to item (a) for details]. Then, screw the Camshaft Bushing Installer Nut (special tool) onto the end of the Camshaft Bushing Installer Bar, and tighten the Nut to press-fit the bushings. Continue turning the Nut until the Bar's flange touches the crankcase.

d) After installing the bushings, remove the Camshaft Bushing Installer Nut and gently withdraw the Camshaft Bushing Installer Bar.

NOTE:
When removing the Camshaft Bushing Installer Bar, take care not to damage the inside surfaces of the bushings.

2) Simultaneous installation of bushings Nos. 5 and 6

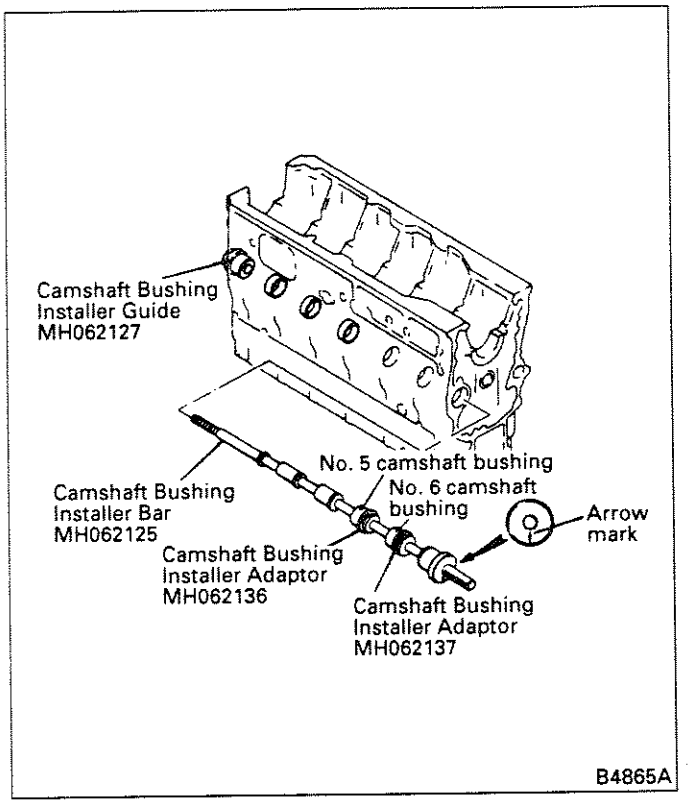

Follow the procedure in section 1) using the appropriate Camshaft Bushing Installer Adapters (special tool) for bushings Nos. 5 and 6.

3) Installation of bushings Nos. 1 and 7

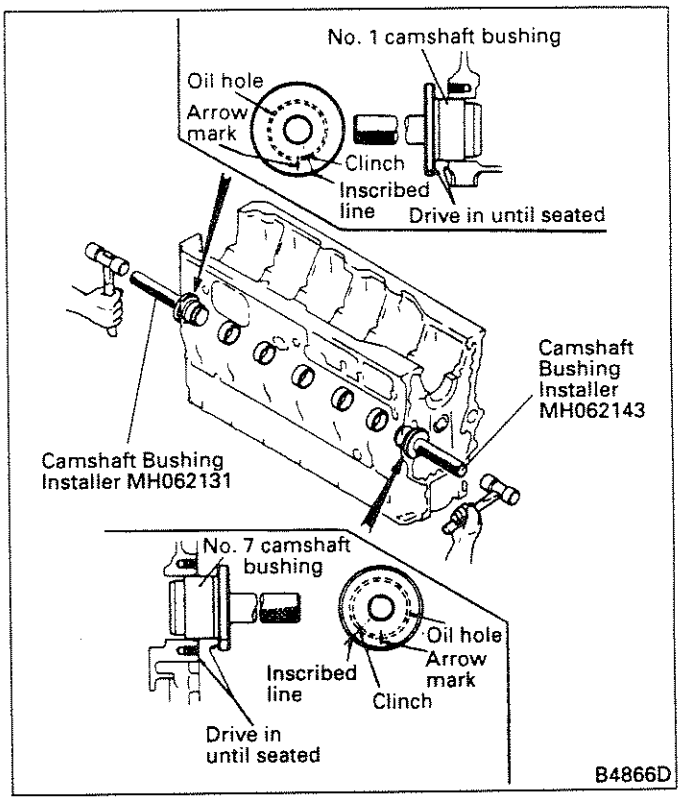

Install bushings Nos. 1 and 7 as follows: Align the inscribed lines on the Camshaft Bushing Installer (special tool) with the clinches (seams) on the bushing and position the oil holes as shown in the illustration. Face the arrow on the Installer toward the top of the crankcase. Drive in the Installer until its flange touches the crankcase.

(8) Camshaft bend

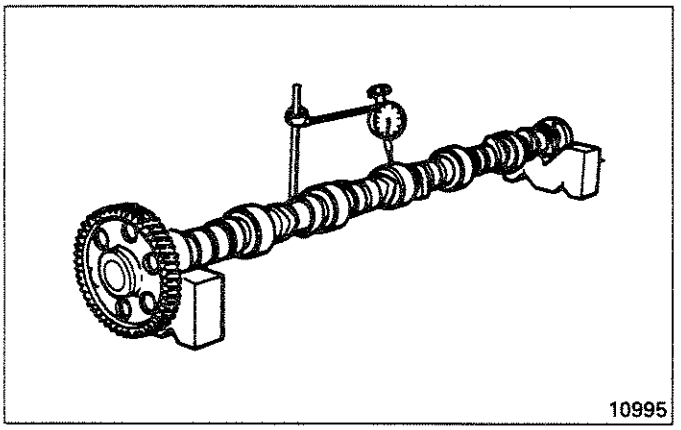

Measure the extent of bending in the crankshaft. If it exceeds the specified limit, replace the crankshaft.

NOTE:

Apply a dial indicator to the camshaft and turn the camshaft through one revolution. One-half of the dial indicator reading represents the amount of bending.

(9) Camshaft-to-camshaft gear interference

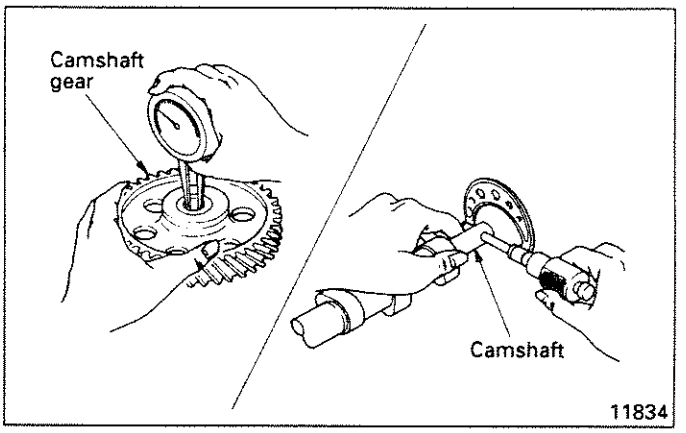

If the interference is below the specified nominal value, replace the camshaft or camshaft gear.

NOTE:

Even if the interference is up to specification, reassembly should be carried out no more than 3 times.

5.3.3 Reassembly

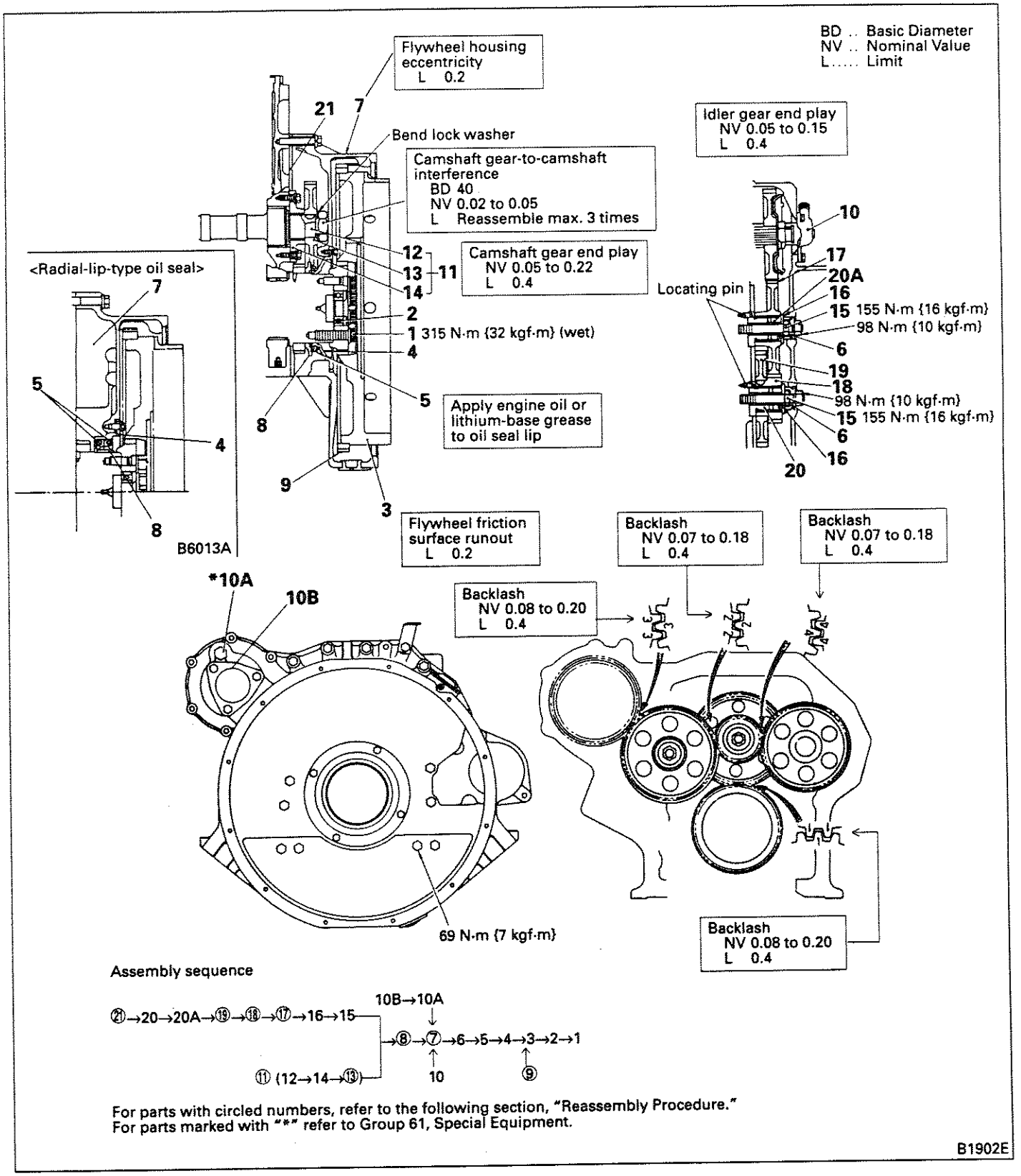

Reassembly Procedure

(1) Mounting rear plate

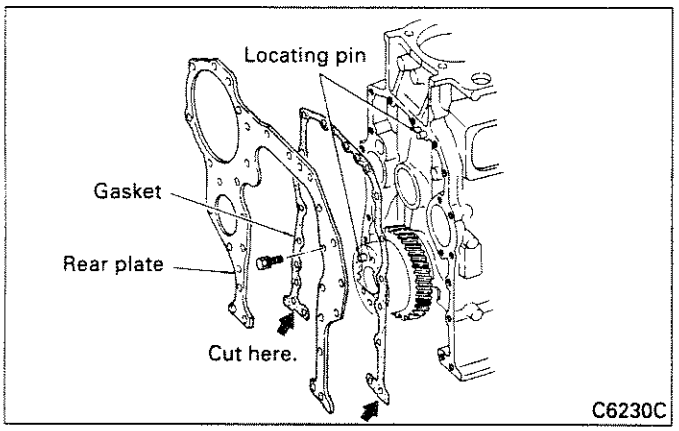

Mount the rear plate and gasket, ensuring that they are aligned with the locating pins on the crankcase.
After the gasket is fitted, its bottom (oil pan mounting surface) will protrude. Cut off the protruding part of the gasket after fitting the flywheel housing.

(2) Installing idler gears

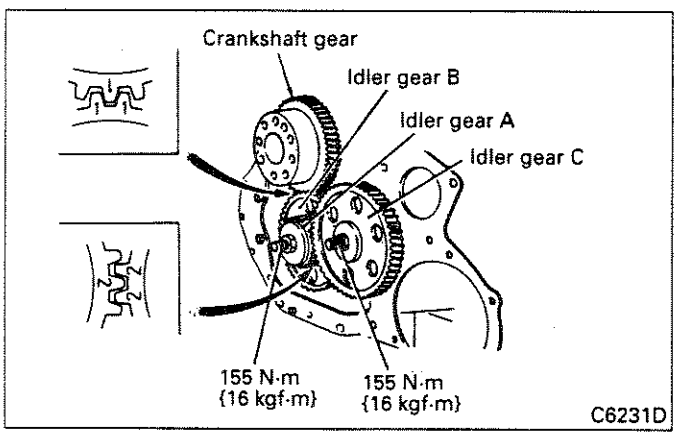

Fit idler gear B and the crankshaft gear such that their "1" alignment marks are aligned with each other. Then, fit idler gears A and C such that their "2" alignment marks are aligned with each other. Tighten the idler shaft bolts to the specified torques.

NOTE:

1. **Align the "1" marks with pistons Nos. 1 and 6 at top dead center.**
2. **Ensure that the "1" marks are aligned before aligning the "2" marks.**

(3) Fitting camshaft gear

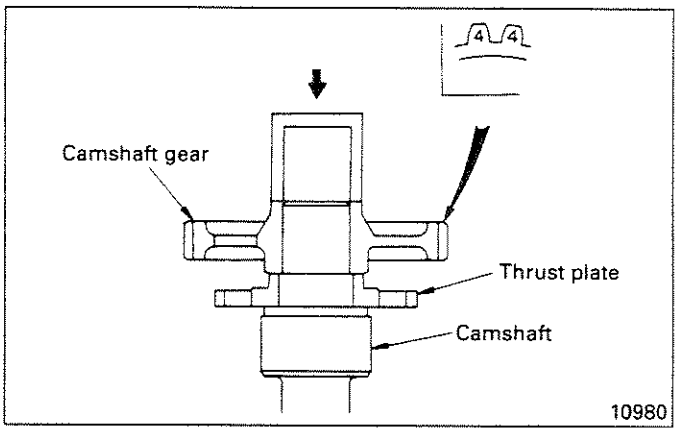

Fit the camshaft gear using a press, ensuring that the side stamped with "4" marks is facing away from the thrust plate.

NOTE:

1. **When fitting the camshaft gear, press down on its central section using a tube. Do not press down on the gear's periphery.**
2. **Reassembly should be carried out no more than 3 times.**

(4) Installing camshaft

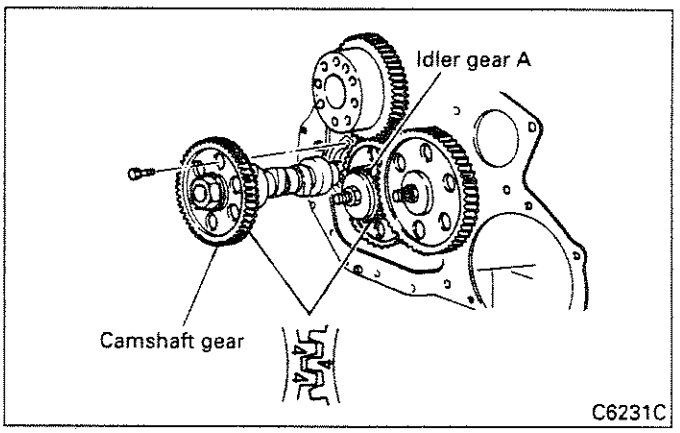

Install the camshaft such that the "4" alignment marks on the camshaft gear and idler gear A are aligned with each other.

NOTE:

1. **When inserting the camshaft, take care not to damage the camshaft bushings.**
2. **Ensure that the "1" marks on the crankshaft gear and idler gear B are aligned before aligning the "4" marks.**

(5) Check the end play in the camshaft gear and idler gears. [Refer to item (5) of section 5.3.1 for details.]

(6) Check the backlash in the gears. [Refer to item (4) of section 5.3.1 for details.]

(7) Installing rear oil seal slinger <With axial-lip-type oil seal>

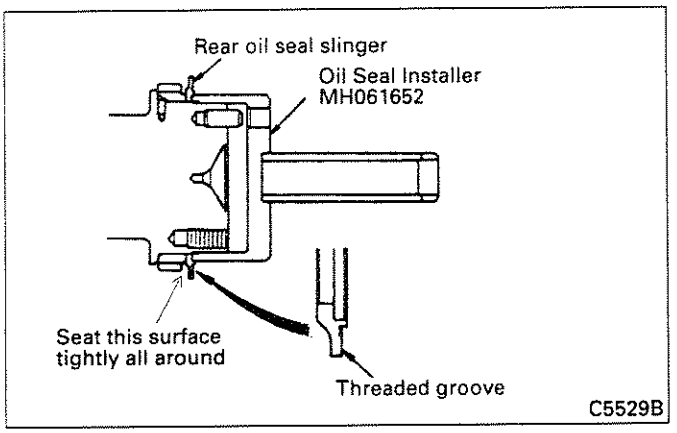

Face the threaded groove toward the flywheel. Using the Oil Seal Slinger Installer (special tool), evenly press the oil seal slinger until it is seated tightly on the crankshaft gear.

(8) Fitting oil seal sleeve <With radial-lip-type oil seal>

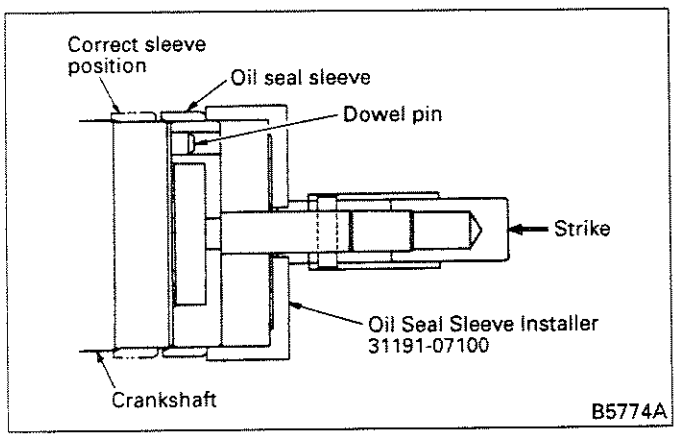

Apply engine oil to the crankshaft and to the inside diameter of the sleeve. Using the Oil Seal Sleeve Installer (special tool), press the sleeve into position on the crankshaft.

NOTE:

1. **The sleeve's inside diameter is chamfered on one side. When fitting the sleeve, face the chamfered side toward the crankshaft.**
2. **Since the sleeve must be pushed into the correct position (shown in the illustration), you must use the Oil Seal Sleeve Installer. The sleeve is in the correct position when the Installer can be driven in no further.**

(9) Fitting ring gear

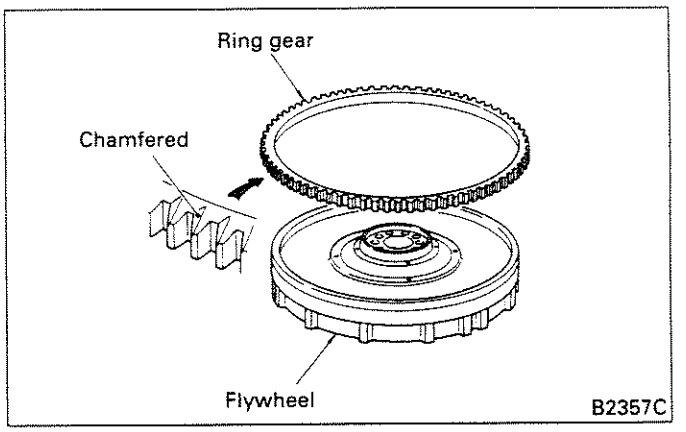

Using a piston heater, heat the ring gear to approximately 100°C for 3 minutes. Fit the ring gear with the non-chamfered side of its teeth toward the flywheel.

(10) Fitting flywheel housing

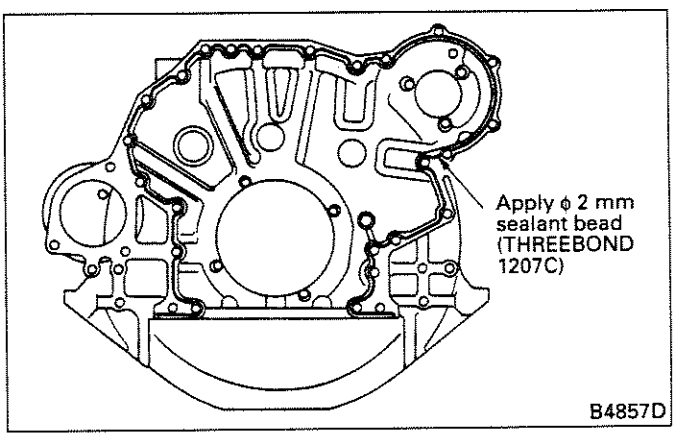

(a) Apply a bead of sealant to the flywheel housing as shown in the illustration. Fit the flywheel housing within 3 minutes of applying the sealant.

NOTE:

1. **Apply a new bead of sealant whenever the flywheel housing mounting bolts have been loosened.**
2. **Keep the flywheel housing sealing surface free of dirt and oil.**
3. **Apply the sealant evenly and without breaks.**
4. **When fitting the flywheel housing, hold it firmly in position to prevent spreading the sealant.**
5. **After fitting the flywheel housing, wait at least 1 hour before starting the engine.**

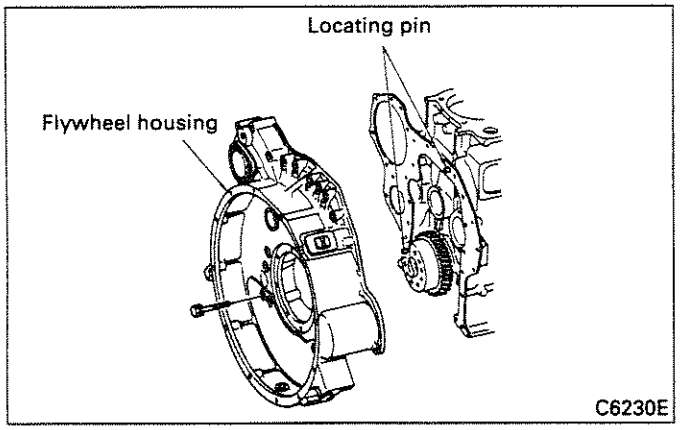

(b) Fit the flywheel housing such that it is aligned with the locating pins in the crankcase.

(11) Checking flywheel housing eccentricity

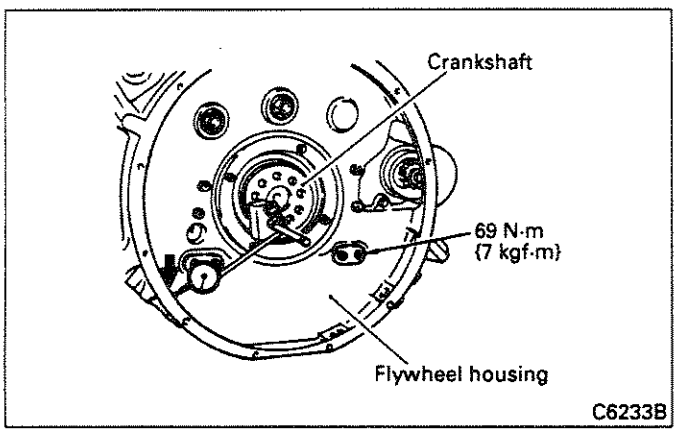

Tighten the flywheel housing mounting bolts to the specified torque. Then, rotate the flywheel and check for eccentricity at the flywheel housing joint. If eccentricity exceeds the specified limit, remove the flywheel housing, refit it according to the instructions in item (10), and measure the eccentricity again.
If the eccentricity exceeds the specified limit even after remedial measures have been taken, replace the flywheel housing.

(12) Installing oil seal

<Axial-lip-type oil seal>

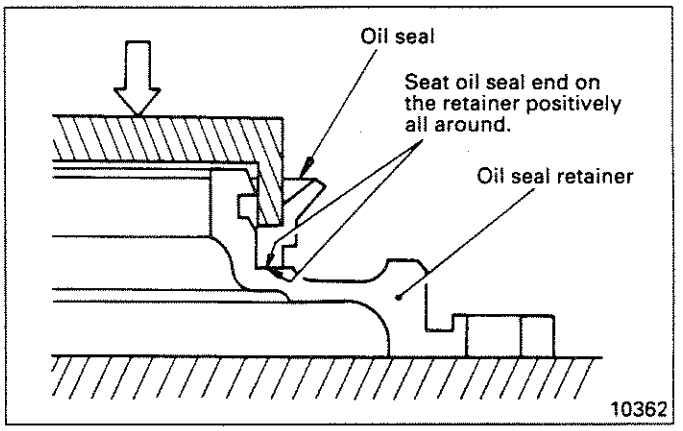

To fit the oil seal onto its retainer, apply pressure evenly to its entire periphery until it is seated tightly in the retainer.

<Radial-lip-type oil seal>

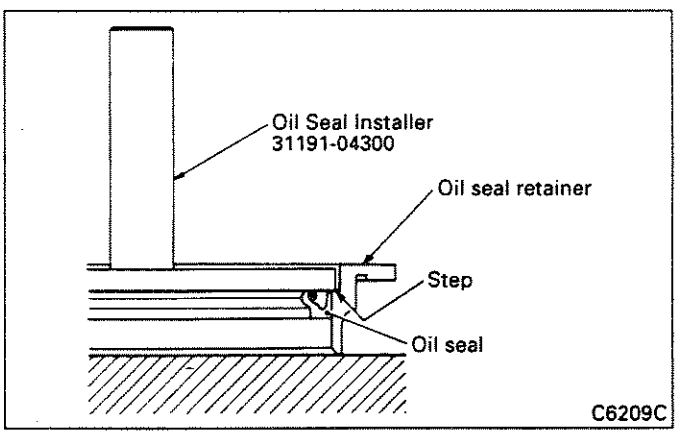

(a) To install the oil seal, apply pressure evenly to its entire periphery using the Oil Seal Installer (special tool) until it reaches the step in the oil seal retainer.

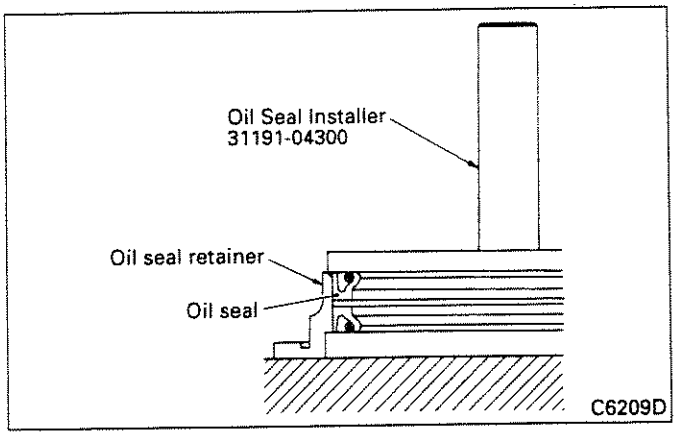

(b) Turn the oil seal retainer over, then apply the Oil Seal Installer (special tool) to the oil seal from the opposite direction until the oil seal reaches the retainer's outer surface.

NOTE:
Different oil seals have different installation directions. Be sure to install the oil seal in the correct direction.

(13) Checking flywheel runout

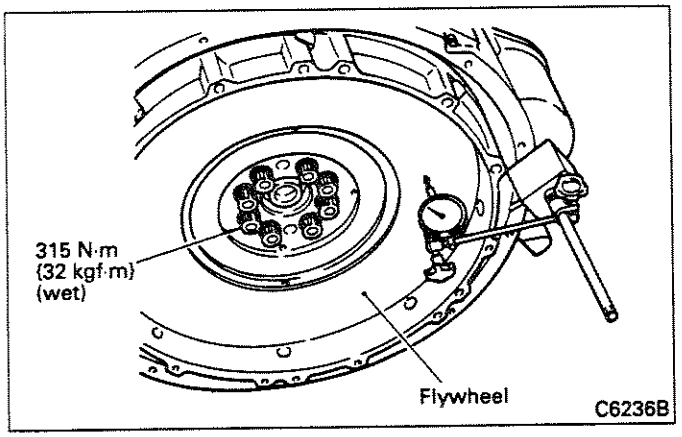

After tightening the flywheel mounting bolts to the specified torque, rotate the flywheel and check for runout. If runout exceeds the specified limit, check the bolts' tightness and/or check the mounting surface.

(14) Checking valve timing

If you need to recheck the valve timing after reassembling the engine, do so according to the following procedure.

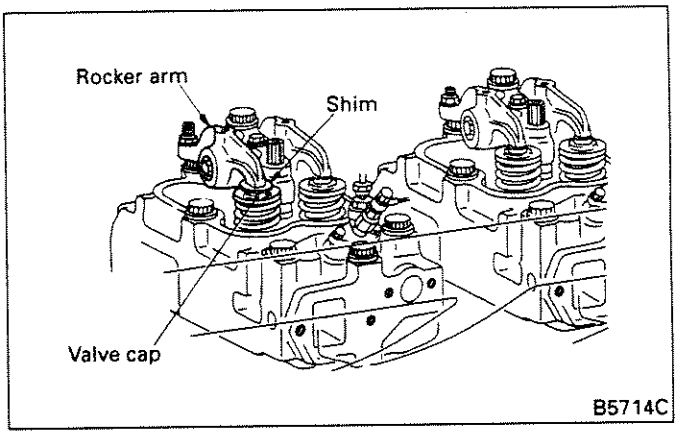

(a) Bring cylinder No.1 to its compression-stroke top dead center position.

(b) Insert a 3 mm shim between cylinder No.1's exhaust valve rocker arm and valve cap. Make any adjustments necessary using the adjusting screw, then tighten the lock nut.

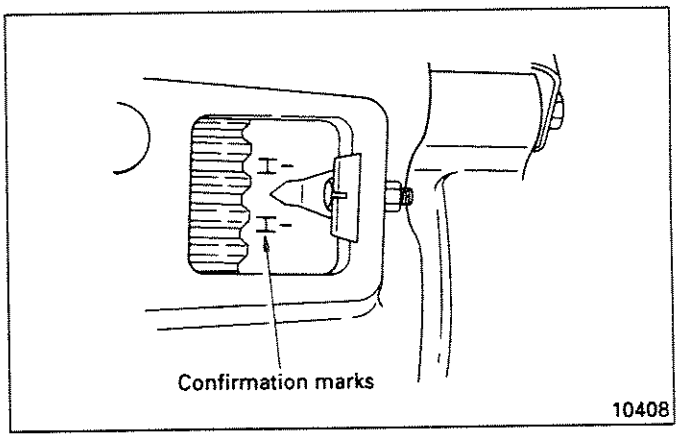

(c) Crank the engine in its normal direction of rotation (clockwise when viewed from the front). When cylinder No.1's exhaust valve begins to lift, confirm that the pointer on the flywheel housing is between the valve timing confirmation marks on the flywheel's outer periphery. If the timing marks are in the wrong position, refer to items (2) and (4), and check the timing marks again.

5.4 Crankcase and Main Moving Parts

5.4.1 Disassembly

NV .. Nominal Value
L..... Limit

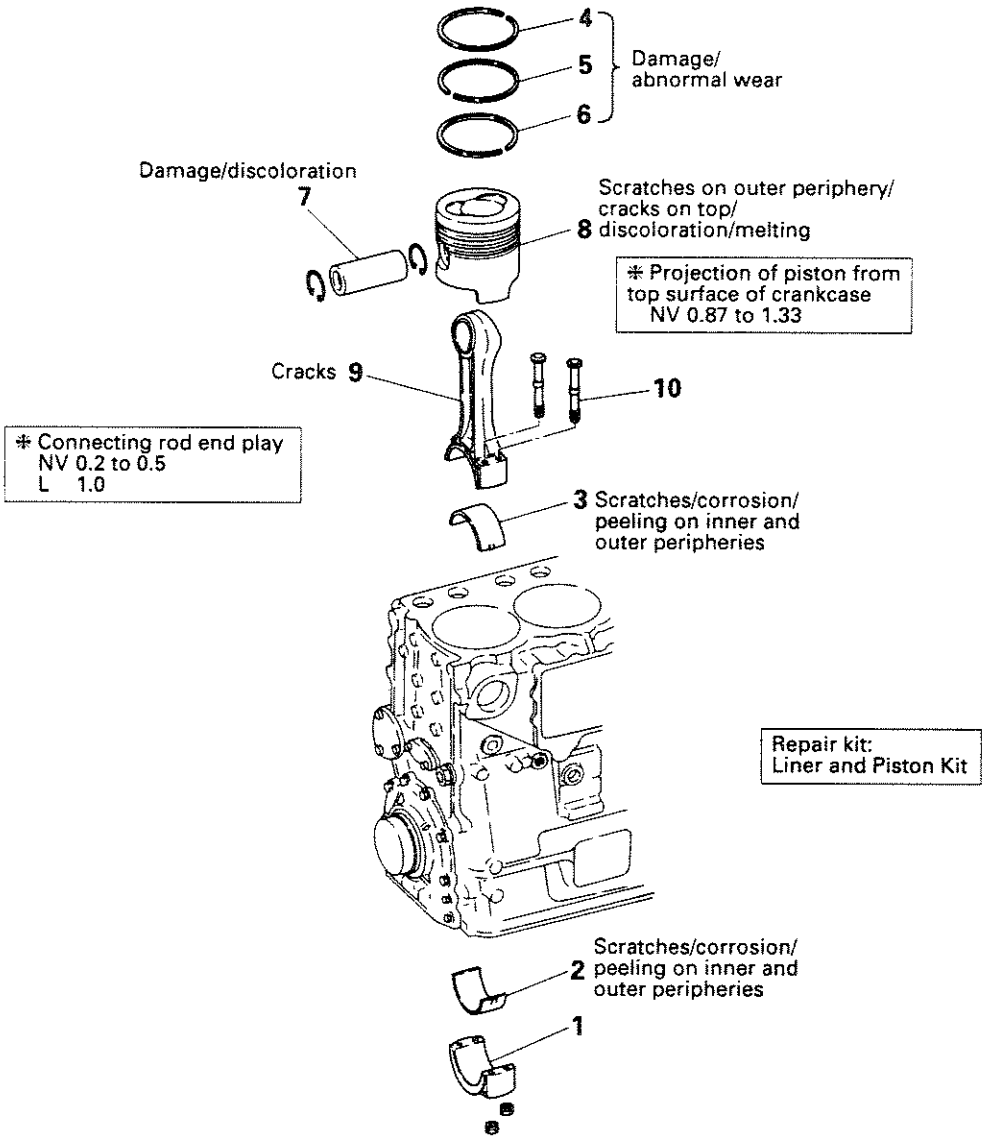

Disassembly sequence

1 Connecting rod cap
2 Lower connecting rod bearing
3 Upper connecting rod bearing
④ 1st compression ring
⑤ 2nd compression ring
⑥ Oil ring
7 Piston pin
⑧ Piston
⑨ Connecting rod
*10 Connecting rod bolt

For parts with circled numbers, refer to the following section, "Disassembly Procedure."
Parts marked with "✻" should be inspected prior to disassembly.
Parts marked with "*" should not be removed unless defects are evident.

C2337G

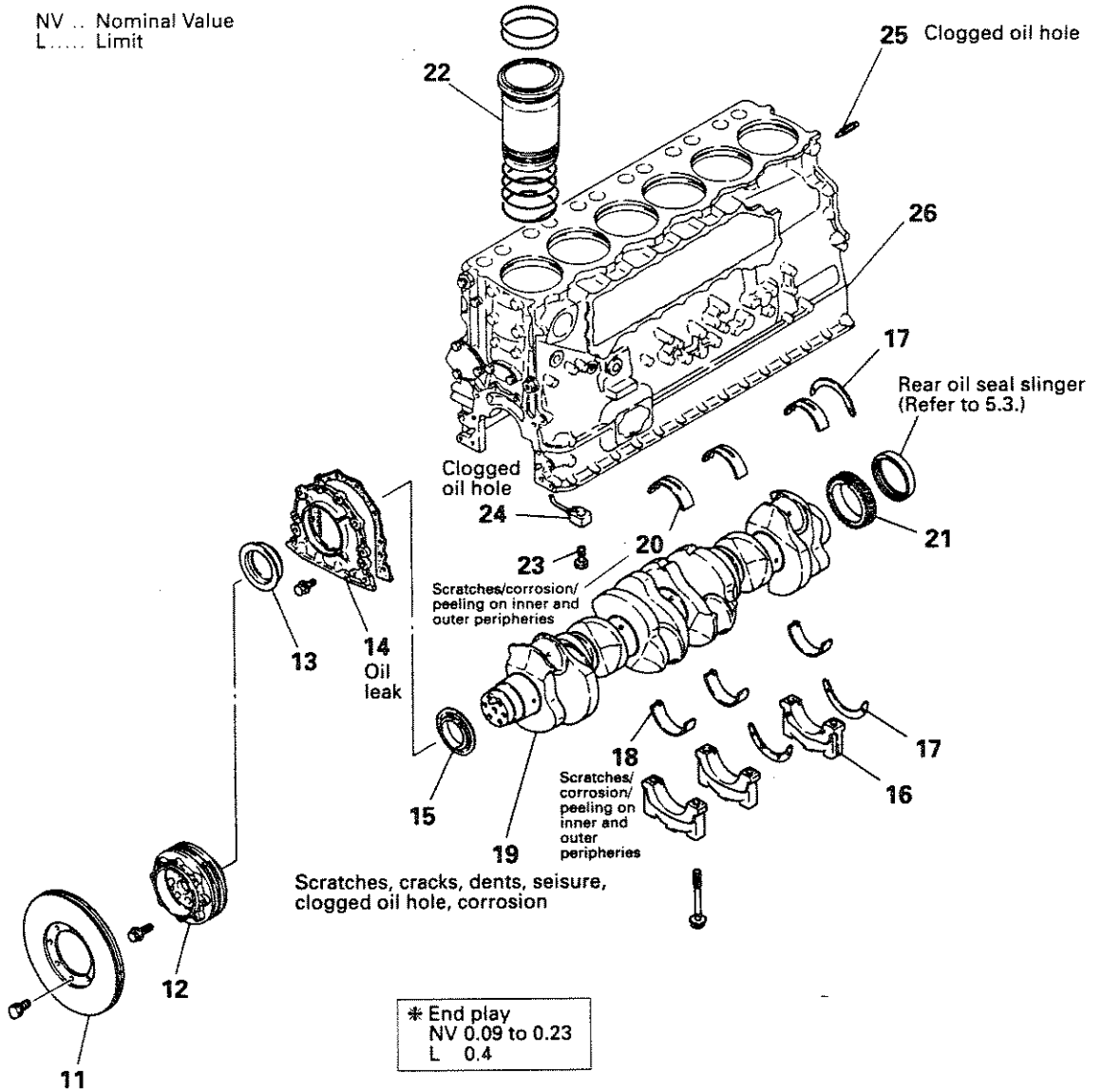

✻ End play
NV 0.09 to 0.23
L 0.4

Disassembly sequence

11 Torsional damper
12 Crankshaft pulley
*1 13 Front oil seal
14 Front cover
*1 15 Front oil seal slinger
16 Main bearing cap
17 Thrust plate
18 Lower main bearing
19 Crankshaft
20 Upper main bearing
*1 ㉑ Crankshaft gear
*1 22 Cylinder liner
*2 23 Check valve
24 Oil jet
25 Oil spray plug
26 Crankcase

For parts with circled numbers, refer to the following section, "Disassembly Procedure."
Parts marked with "✻" should be inspected prior to disassembly.
Parts marked with "*1" should not be removed unless defects are evident.
Parts marked with "*2" must not be reused since they are held in place by thread-lock cement and may be deformed during disassembly.

B0599G

Disassembly Procedure

(1) Piston projection

The piston projection measurements must conform with specifications, partly since they affect engine performance, and partly since the pistons must not interfere with the valves.

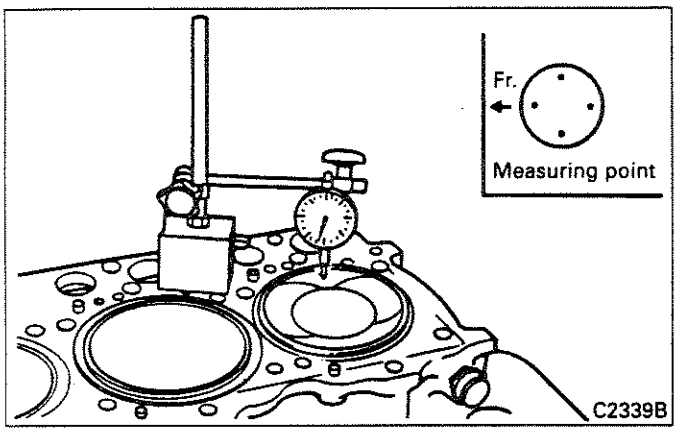

(a) Attach a dial indicator to the top surface of the crankcase and adjust it to zero.
(b) Using the dial indicator, find the piston's top dead center position.
(c) Take measurements at 4 points on the piston's top surface and determine their average.
(d) If the piston projection does not conform with specifications, check the clearances between piston/connecting rod and neighboring parts.

(2) Connecting rod end play

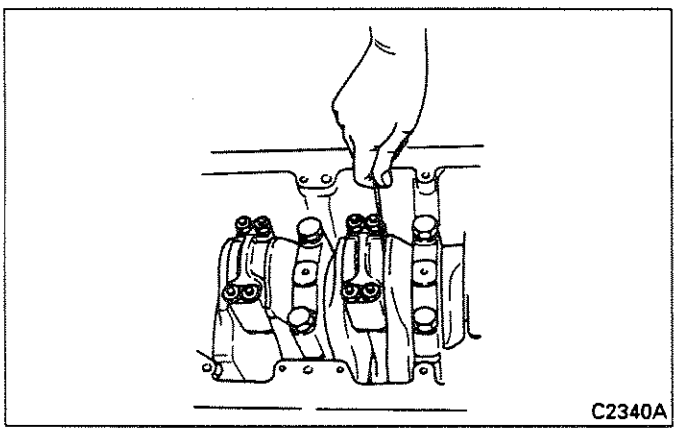

Measure each connecting rod's end play. If any measurement exceeds the specified limit, replace the connecting rod.

(3) Removing pistons

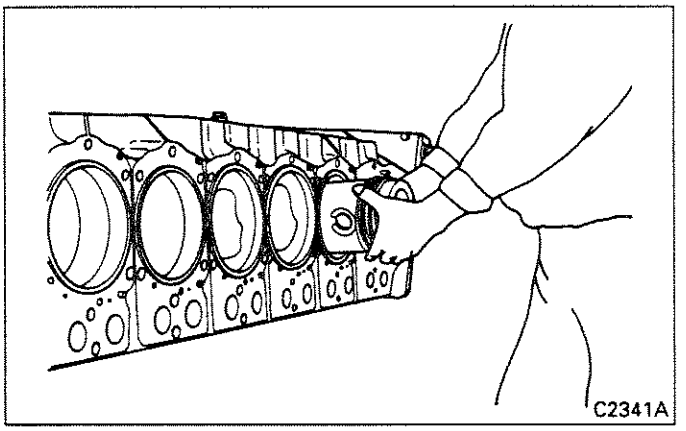

Withdraw the piston from the crankcase together with its connecting rod, working from the top surface of the crankcase.

NOTE:
When removing a piston, take care not to damage the cylinder liner.

(4) Separating piston from connecting rod

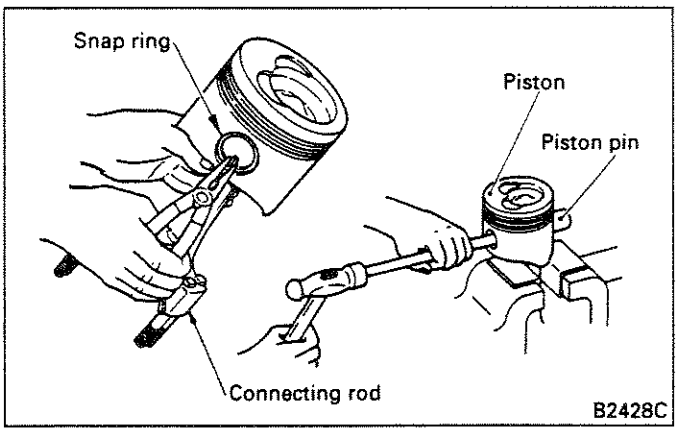

Remove the snap rings, then use a rod and hammer to tap the piston pin out. If the piston pin is hard to remove, heat the piston in hot water or with a piston heater.

(5) Removing piston rings

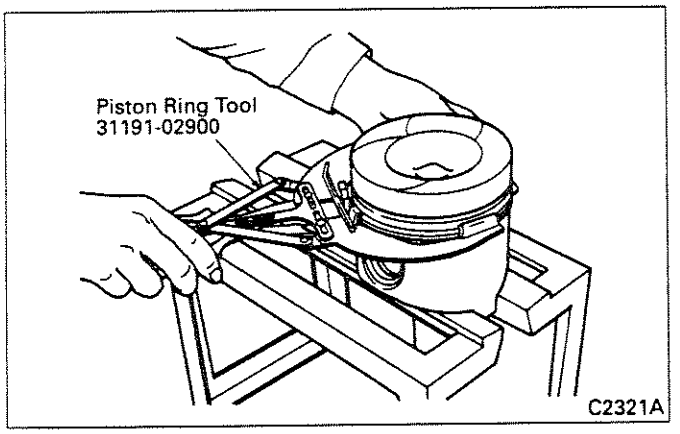

(6) Crankshaft end play

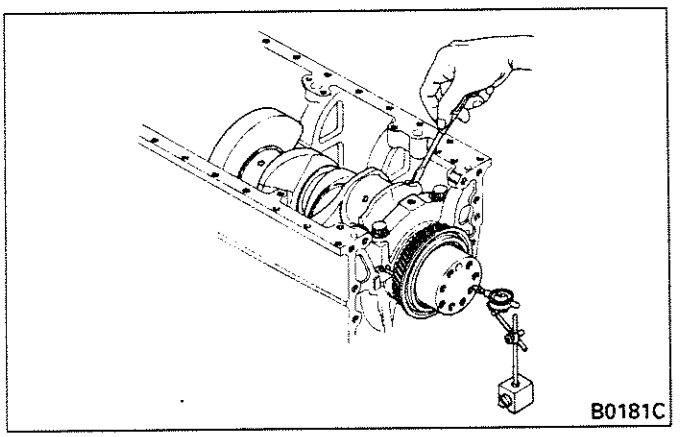

Before removing the main bearing caps, measure the end play in the crankshaft. If it exceeds the specified limit, replace the thrust plate with an oversized one. [Refer to item (3) of section 5.4.3 for details.]

(7) Removing main bearing caps

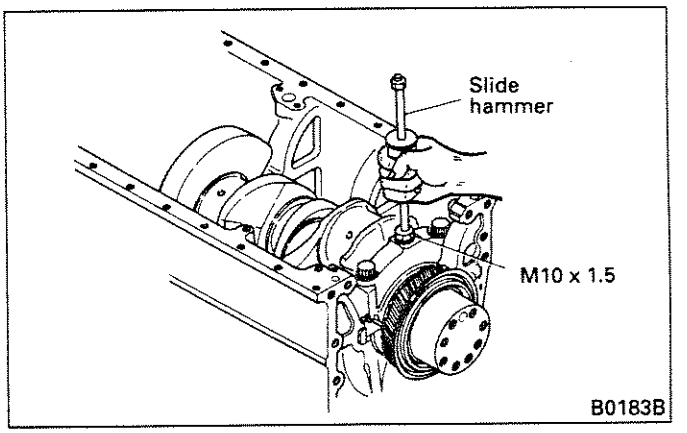

The rearmost main bearing cap is located on dowel pins and must therefore be removed with a slide hammer.

(8) Removing crankshaft gear

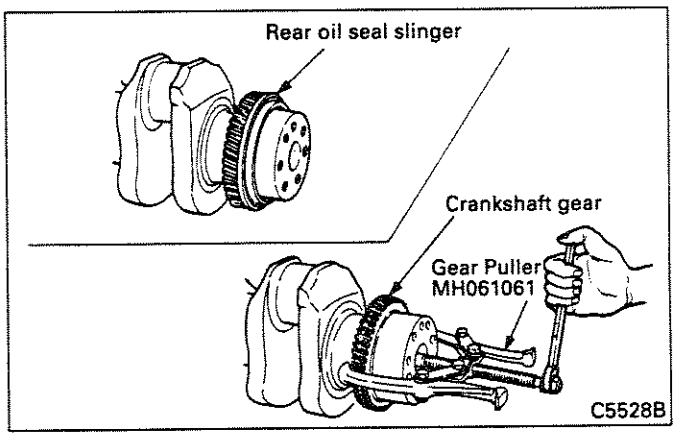

(a) Split the rear oil seal slinger with a chisel and remove it from the crankshaft.
(b) Remove the crankshaft gear from the crankshaft using the Gear Puller (special tool).

NOTE:
Do not attempt to remove the crankshaft gear by striking it.

5.4.2 Inspection

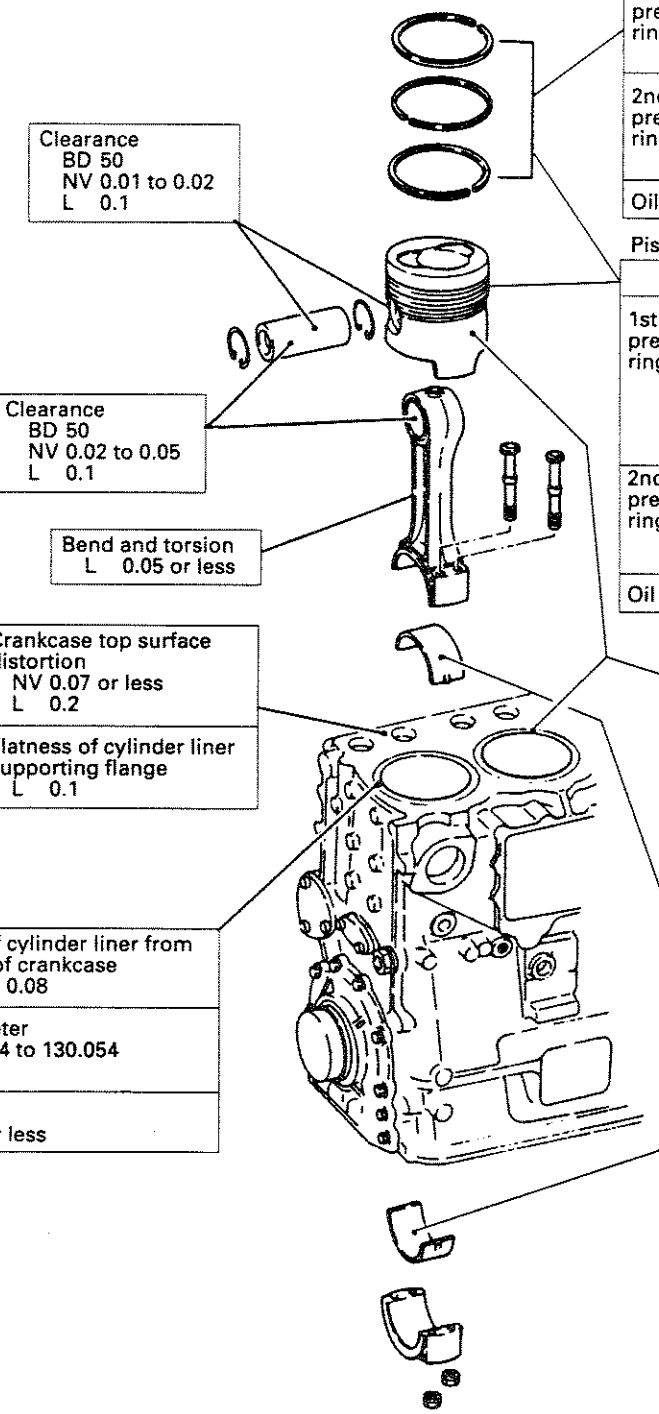

End gap

Item		NV	L
1st compression ring	6D22, 22-T, 22-TC	0.4 to 0.6	1.5
	6D24-T, 24-TC	0.4 to 0.55	
2nd compression ring	6D22, 22-T, 22-TC	0.4 to 0.6	1.5
	6D24-T, 24-TC	0.5 to 0.65	
Oil ring		0.4 to 0.6	1.5

Piston ring groove-to-piston ring clearance

Item		NV	L
1st compression ring	6D22	0.05 to 0.12	0.25
	6D22-T	0.03 to 0.10	
	6D22-TC	0.01 to 0.09	
	6D24-T, 24-TC	0.02 to 0.10	
2nd compression ring	6D22	0.05 to 0.08	0.25
	6D22-T, 22-TC, 24-T, 24-TC	0.07 to 0.10	
Oil ring		0.03 to 0.06	0.15

Clearance

Item	BD	NV
6D22	130	0.178 to 0.204
6D22-T		0.173 to 0.199
6D22-TC		0.188 to 0.214
6D24-T, 24-TC		0.193 to 0.219

Clearance
BD 50
NV 0.01 to 0.02
L 0.1

Clearance
BD 50
NV 0.02 to 0.05
L 0.1

Bend and torsion
L 0.05 or less

Crankcase top surface distortion
NV 0.07 or less
L 0.2

Flatness of cylinder liner supporting flange
L 0.1

Projection of cylinder liner from top surface of crankcase
NV 0.01 to 0.08

Inside diameter
NV 130.014 to 130.054
L 130.25

Cylindricity
NV 0.02 or less

Connecting rod bearing-to-crankshaft pin clearance
BD 84
NV 0.07 to 0.13
L 0.25

Connecting rod bearing span when free
L Less than 90.5

BD .. Basic Diameter
NV .. Nominal Value
L..... Limit

C2760C

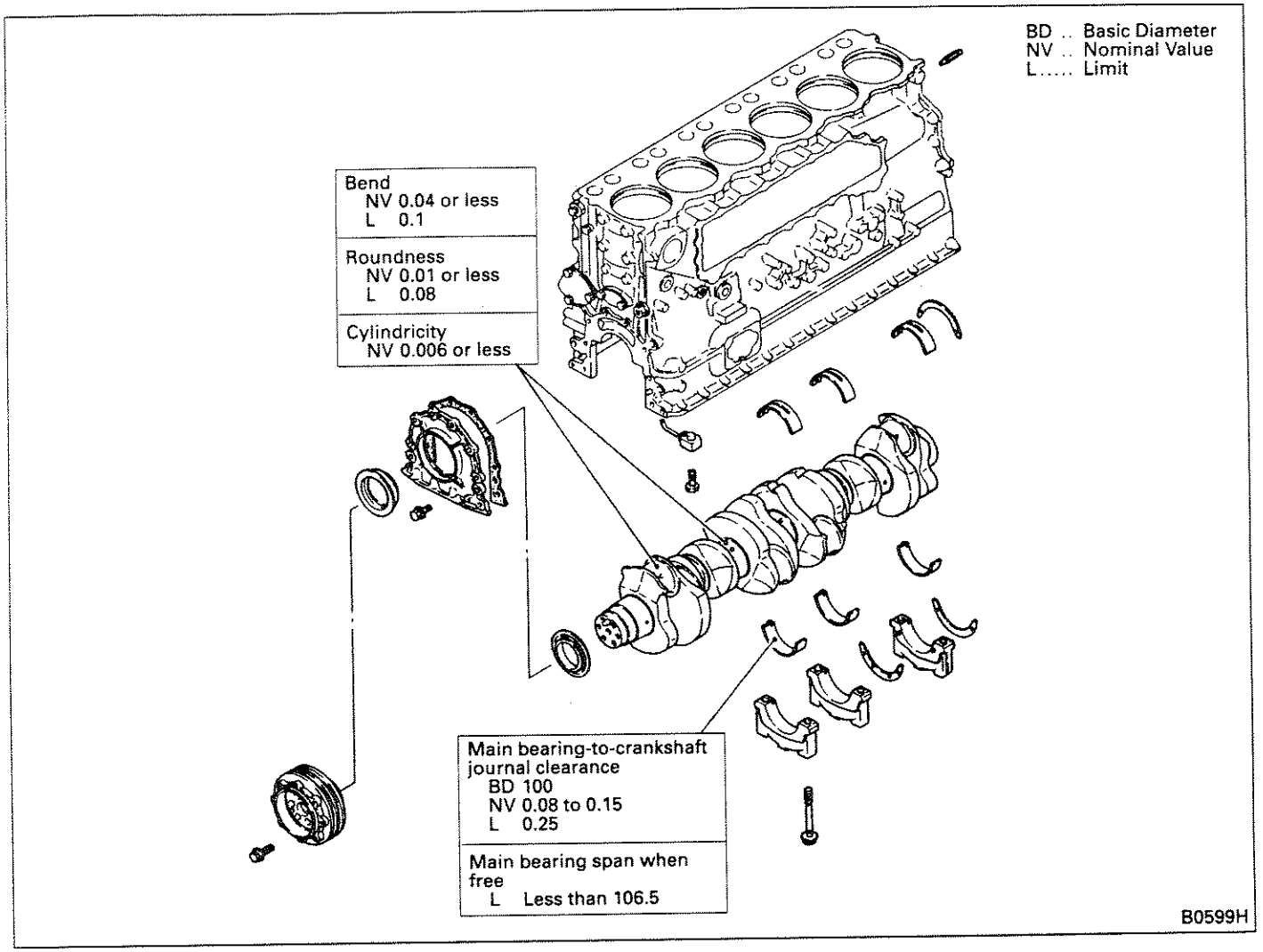

Inspection Procedure

(1) Flatness of cylinder-liner-supporting flange on crankcase

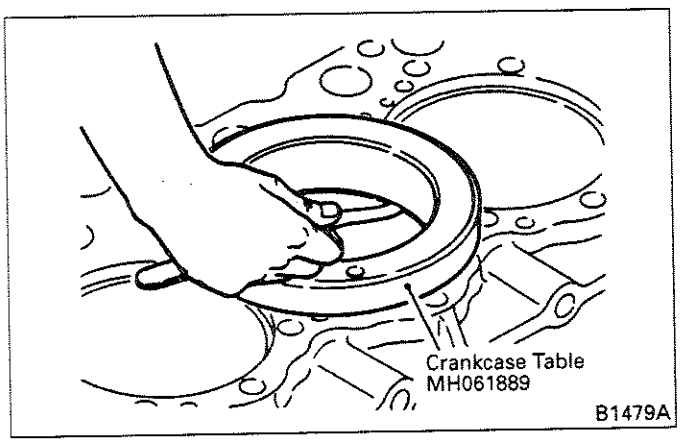

If the measured value is out of specification, replace the crankcase.

(2) Distortion of crankcase top surface

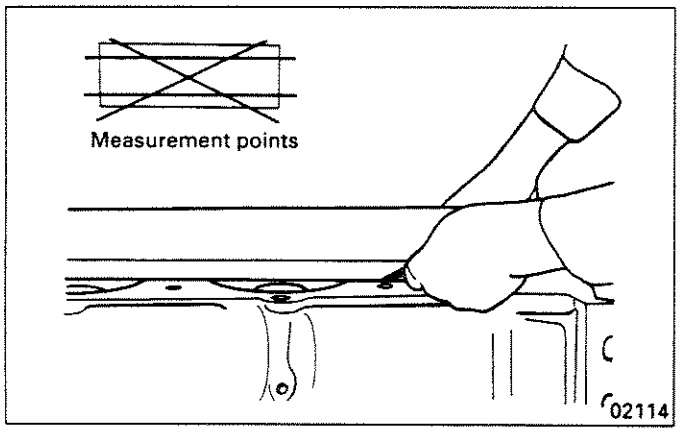

If distortion of the crankcase top surface exceeds the specified limit, correct it with a surface grinder.

NOTE:

When grinding the crankcase, take care that the piston projection does not exceed the specified nominal value. [Refer to item (1) of section 5.4.1 for details.]

(3) Cylinder liner inside diameter

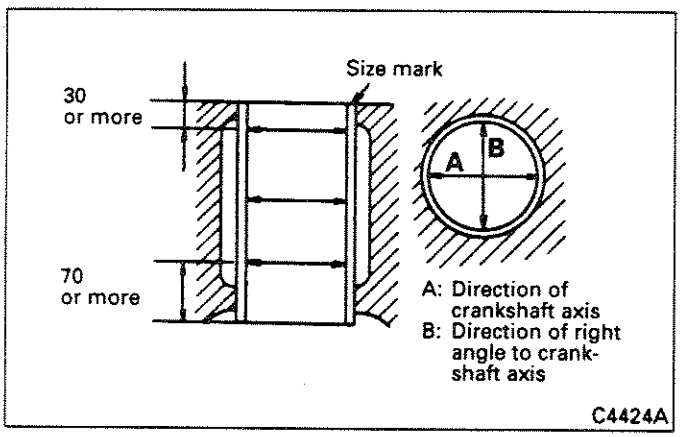

Measure each cylinder liner's inside diameter at 6 points, as shown in the illustration. If the inside diameter exceeds the specified limit, replace the cylinder liner or bore it to oversize. [Refer to item (5) for details of cylinder liner replacement.]

(4) Cylinder liner flange projection

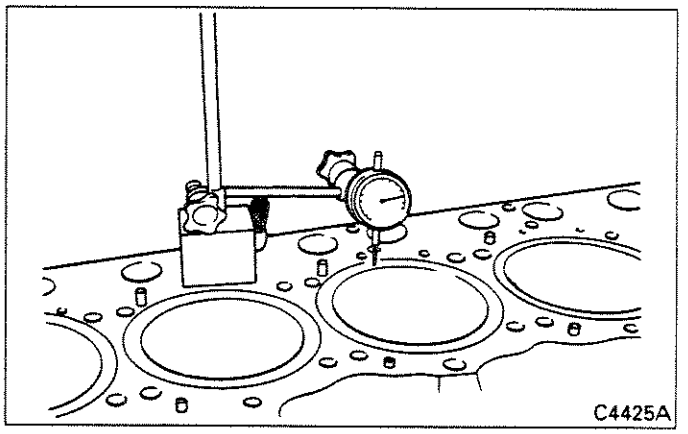

If any cylinder liner projection does not conform with its specified nominal value, replace the cylinder liner or crankcase. [Refer to item (5) for details of cylinder liner replacement.]

(5) Replacing cylinder liner

(a) Removal

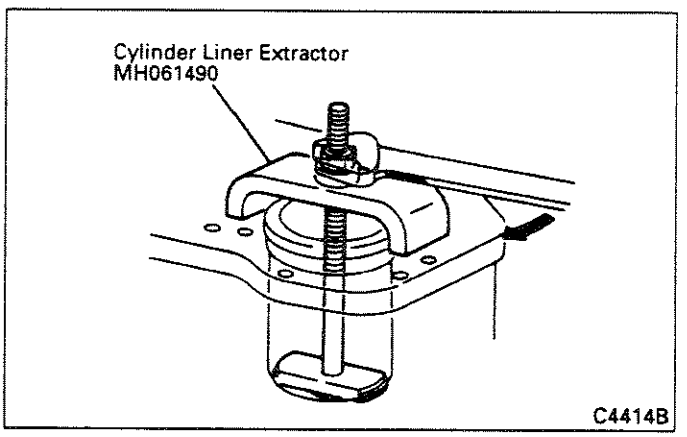

(b) Installation

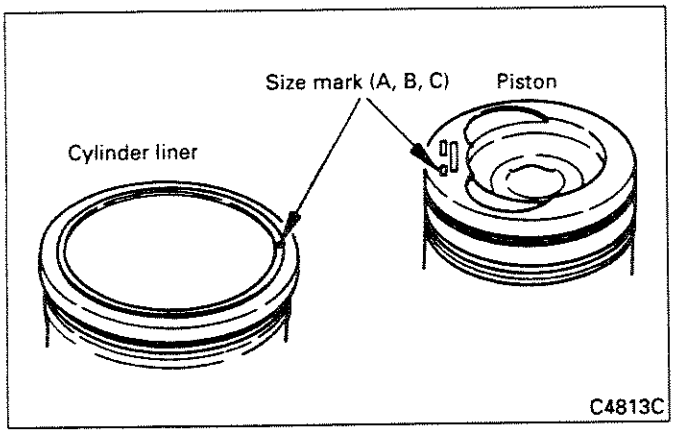

1) Make sure the new cylinder liner bears the same size mark as that of the piston.

Piston size mark	Cylinder liner size mark
A	A
B	B
C	C

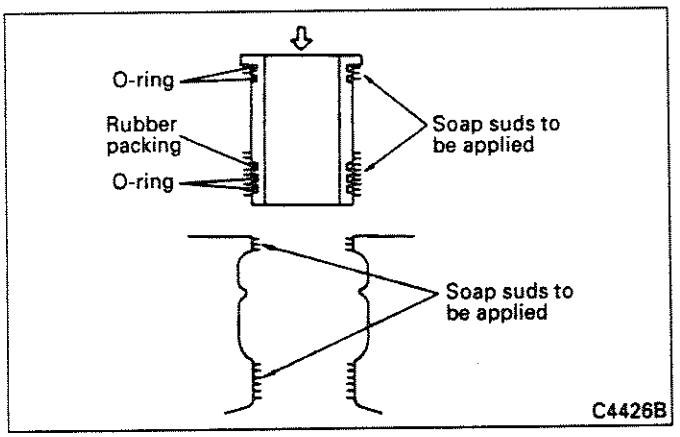

2) Fit new O-rings and rubber packing to the cylinder liner, and apply soap suds to the crankcase and cylinder liner at the points where they will touch each other.

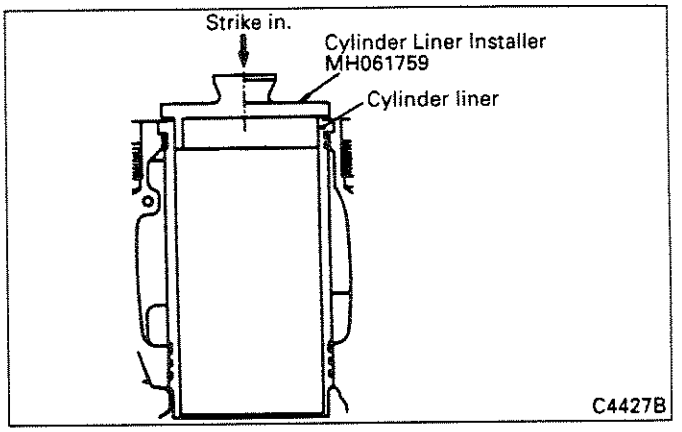

3) Using the Cylinder Liner Installer (special tool), gently tap the cylinder liner down until its flange is securely seated on the crankcase.

NOTE:

1. **Do not stretch O-rings more than is necessary, and be careful not to damage them.**
2. **Contact with gas oil, kerosene, anti-corrosion oil, and similar fluids causes O-rings to swell. Immediately wipe off any such fluids that come into contact with the O-rings.**
3. **After installing a cylinder liner, carry out a leak test to check for air-tightness. Apply thrust force to the cylinder liner flange.**

(6) Selection of pistons and cylinder liners

A piston may be either standard or oversized. Cylinder liners are selected accordingly.

(a) Standard piston

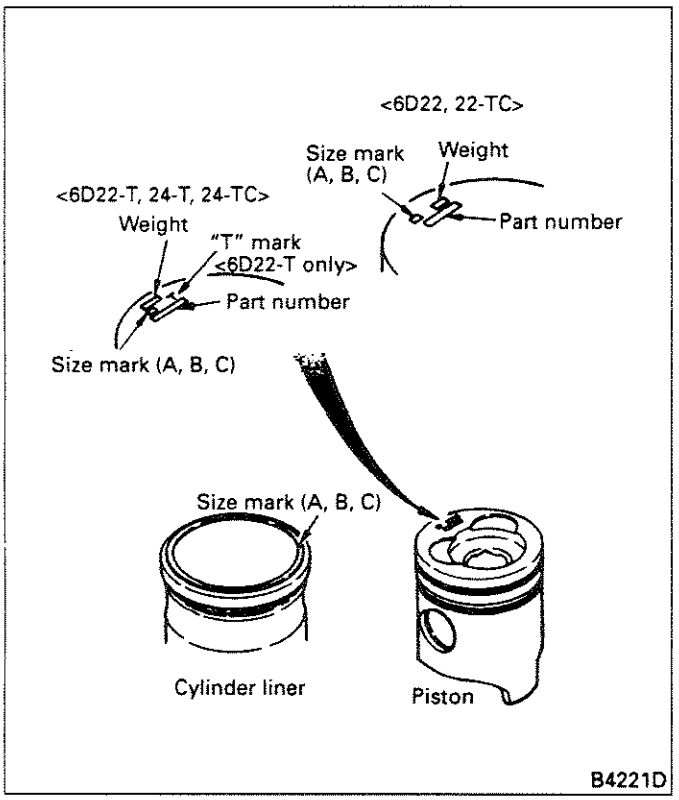

1) The piston must bear the same size mark as that stamped on the cylinder liner.
2) The weight of all 6 of an engine's pistons must be within 10 g of the weight that is stamped on each piston's crown.

NOTE:

Whenever a piston is replaced, the piston rings must also be replaced. Never use old piston rings.

(b) Oversized piston

In accordance with the following instructions, bore the cylinder liner to suit the oversized piston to be used (+0.5, +0.75, or +1.00 mm).

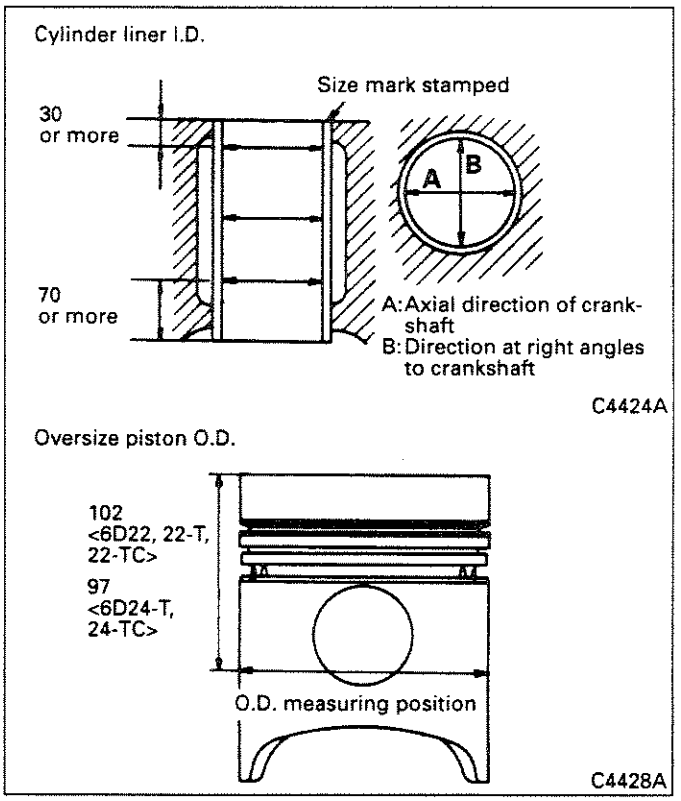

1) Determine the amount of metal to bore out. To do this, measure the inside diameter of every cylinder liner and find the most worn point.
2) Bore and hone-finish the cylinder liner to achieve the specified nominal clearance between the oversized piston and cylinder liner.

NOTE:

1. **Even if only one cylinder requires boring, bore every cylinder to the same oversized inside diameter.**
2. **Replace the piston rings with oversized piston rings that correspond to the increased cylinder liner dimension.**

(7) Piston-to-cylinder liner clearance

If the clearance is out of specification, replace the piston or cylinder liner. [Refer to item (6) for details.]

(8) Piston-to-piston ring clearance

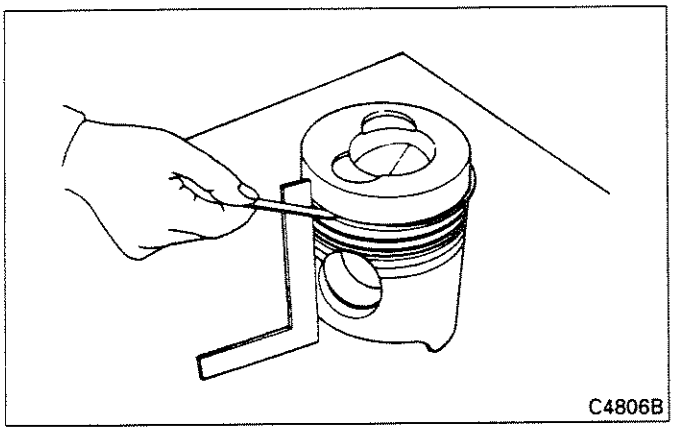

If the clearance exceeds the specified limit, replace the piston or piston rings.

NOTE:

1. **After removing any carbon deposits, measure the clearance around the piston's entire periphery.**
2. **Always replace piston rings as a set, never individually.**

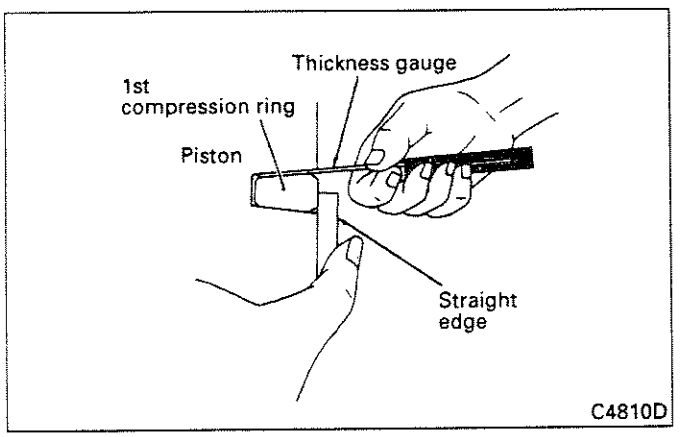

Measure the 1st compression ring clearance while pressing the ring against the piston with a straight edge.

(9) Piston ring gap

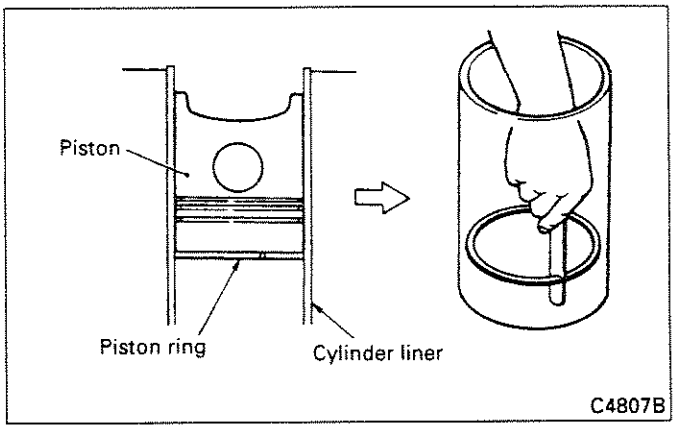

Measure the piston ring gaps with the piston rings horizontally pushed into a standard cylinder liner, either in or out of the crankcase.
Replace the rings if any gap exceeds the specified limit.
Standard cylinder liner inside diameter: 130 ± 0 mm

NOTE:
Use a piston to push the piston rings into the cylinder liner for measurement.

(10) Piston pin-to-piston pin hole clearance

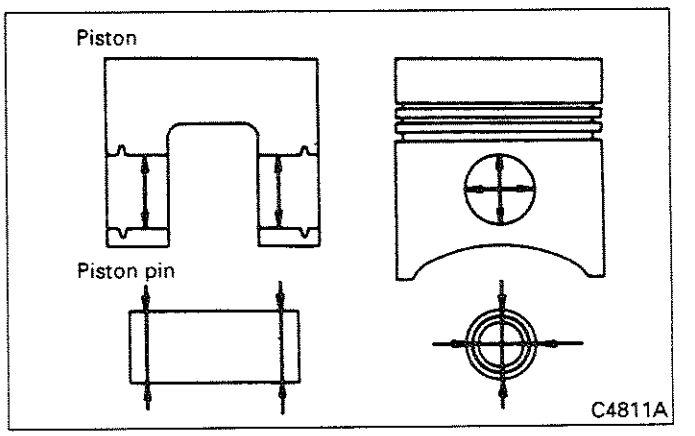

If the clearance exceeds the specified limit, replace the piston pin or piston.

NOTE:
Whenever a piston is replaced, the piston rings must also be replaced. Never use old piston rings.

(11) Piston pin-to-connecting rod small end bushing clearance

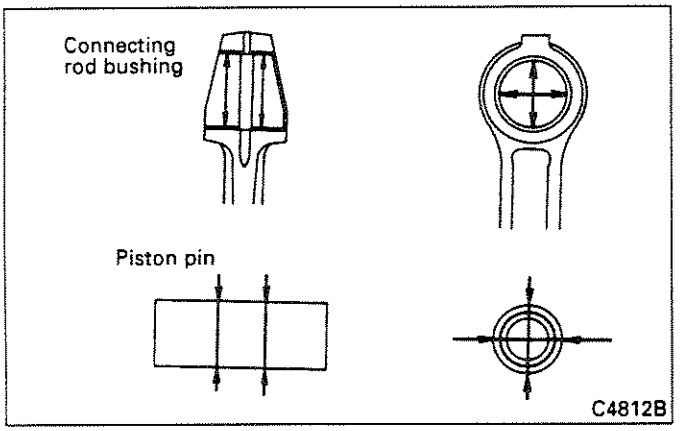

If the clearance exceeds the specified limit, replace the connecting rod bushing.

(12) Replacing connecting rod bushing

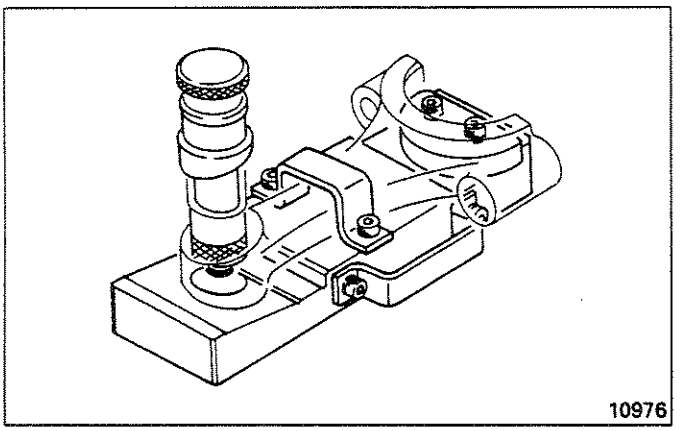

Replace the bushing using the Connecting Rod Bushing Puller (special tool).

(a) Removing bushing

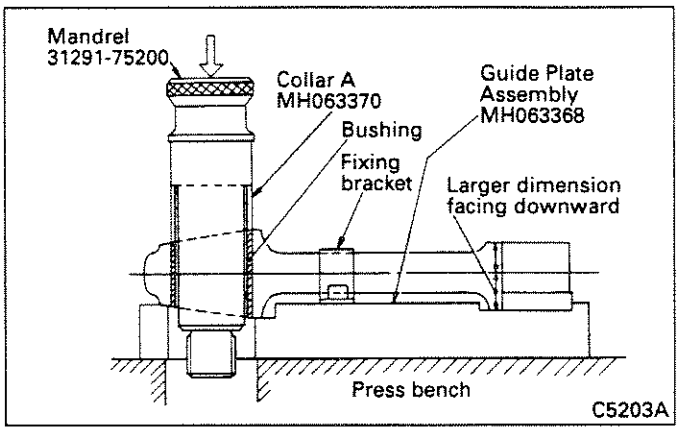

1) Remove the bearing from the connecting rod's big end, then mount the connecting rod on the Base (special tool).
2) Fit the Mandrel and Collar A (special tools) onto the connecting rod's small end as shown in the illustration. Slowly apply pressure with a press that has a capacity of at least 49 kN {5,000 kgf}.

(b) Press-fitting bushing

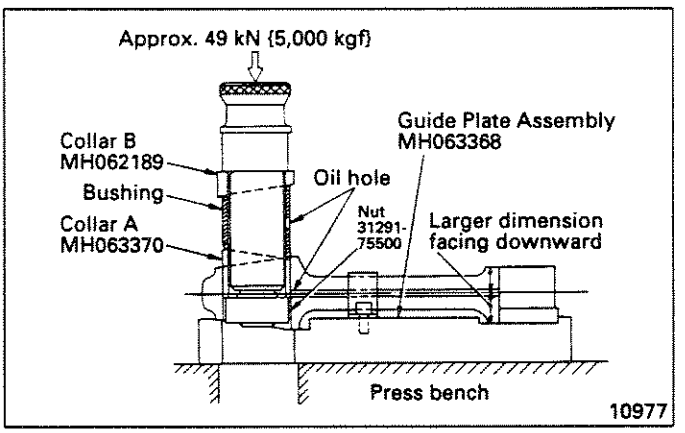

1) Set up the Mandrel, Collar B, Collar A, and the Nut (special tools) on the bushing as shown in the illustration.
2) Apply engine oil to the connecting rod's small end and to the bushing.
3) Using the press, apply pressure of approximately 49 kN {5,000 kgf} such that the bushing is pressed into the connecting rod's small end.
4) After press-fitting the bushing, remove the special tools. Then, ream the bushing to achieve the specified nominal clearance between the bushing and piston pin.

NOTE:

1. **When press-fitting the bushing, align the oil hole in the bushing with the oil hole in the connecting rod.**
2. **When the piston pin is inserted, ensure that it turns easily and without play.**

(13) Connecting rod bend and twist

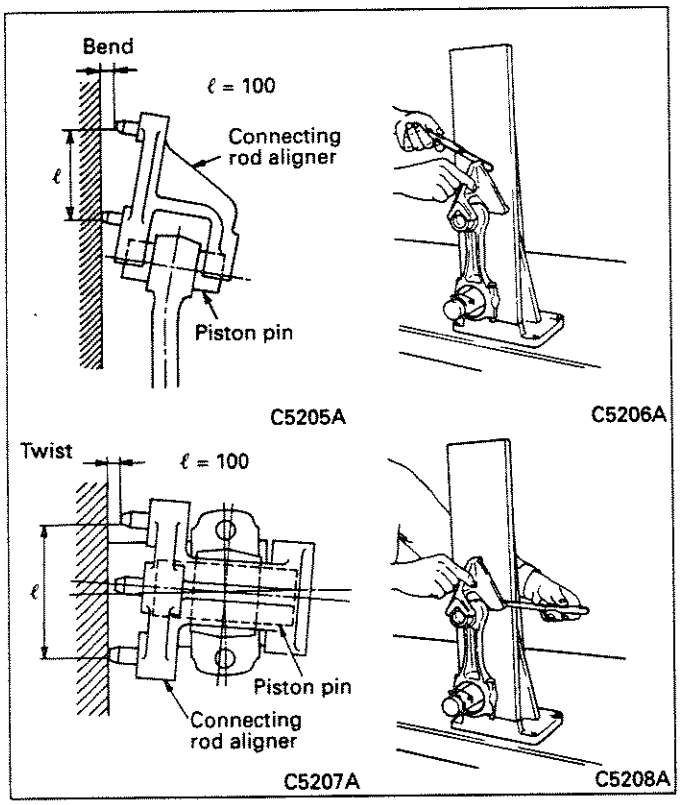

Measure the amount of bend and twist in the connecting rod using a special connecting rod aligner. If the measurements exceed the specified limits, replace the connecting rod or rectify it using a press.

NOTE:

1. **Measurements must be made with the connecting rod bushing and upper and lower connecting rod bearings fitted in their respective positions.**
2. **Measurements must be made with the connecting rod cap mounting nuts tightened to their specified torque.**

(14) Span of connecting rod bearings and main bearings when free

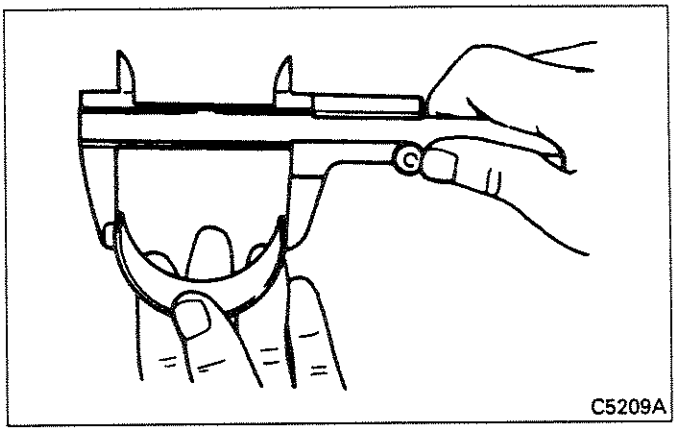

If the span is less than the specified requirement, replace the upper and lower bearings as a set.

NOTE:

Do not attempt to manually expand a bearing if its span is insufficient.

(15) Connecting rod bearing-to-crankshaft pin clearance

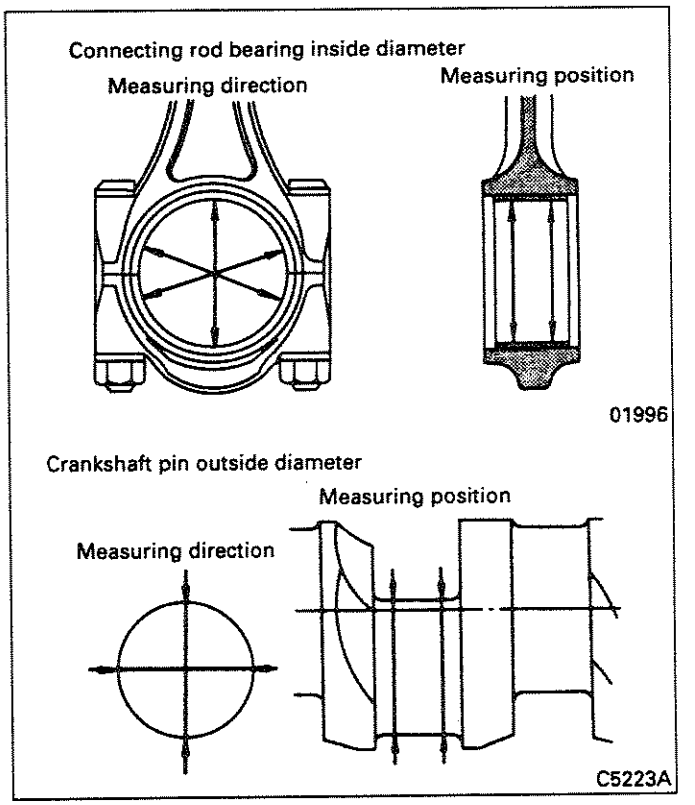

If the clearance exceeds the specified limit, replace the upper and lower bearings as a set.

NOTE:

Measurements must be made with the connecting rod cap mounting nuts tightened to their specified torque.

(16) Main bearing-to-crankshaft journal clearance

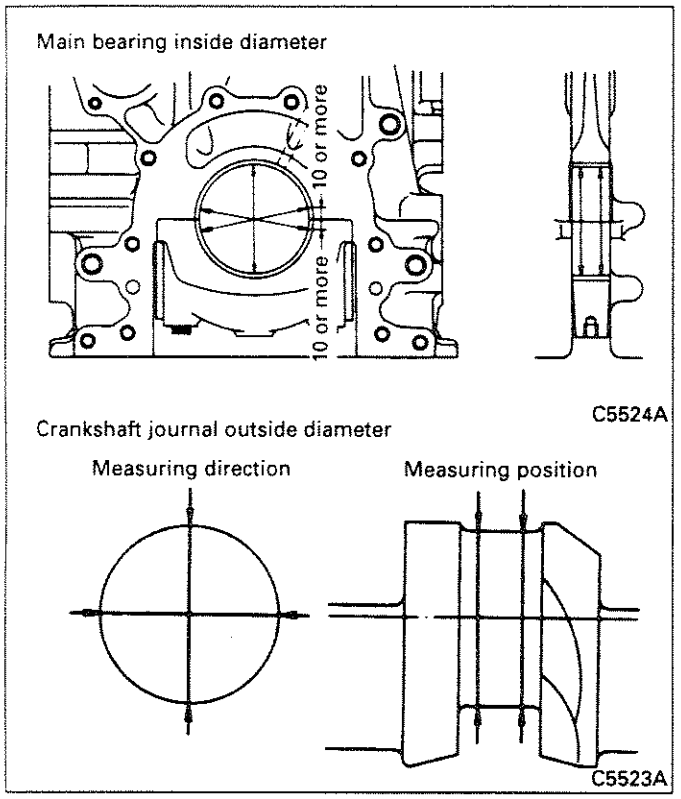

If the clearance exceeds the specified limit, replace the upper and lower bearings as a set.

(17) Roundness and cylindricity of crankshaft pin and journal

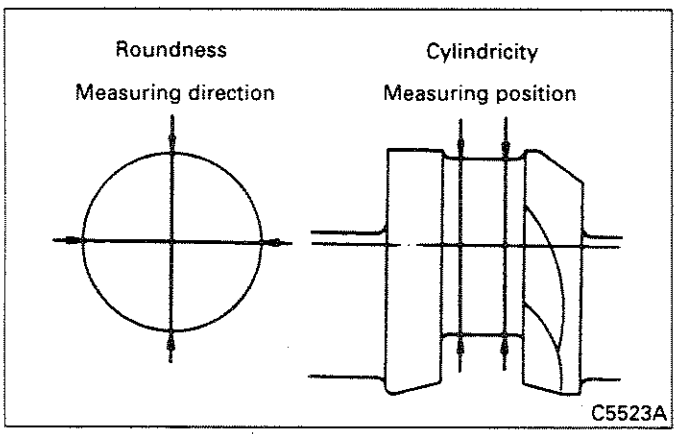

If roundness and cylindricity do not conform with the specified limits, grind to undersize. [Refer to item (19) for details.]

(18) Crankshaft bend

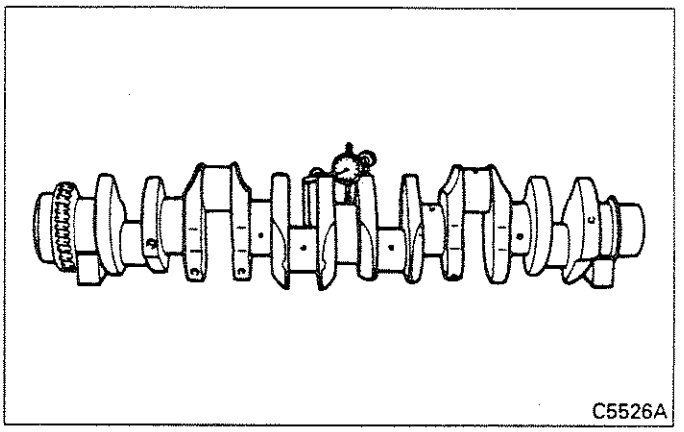

Measure the extend of bending in the crankshaft at the middle journal. If the measurement exceeds the specified limit, grind to undersize or replace the crankshaft.

NOTE:

With the dial indicator applied to the middle journal, turn the crankshaft through one revolution. One-half of the dial indicator reading represents the extent of bending in the crankshaft.

(19) Grinding crankshaft to undersize

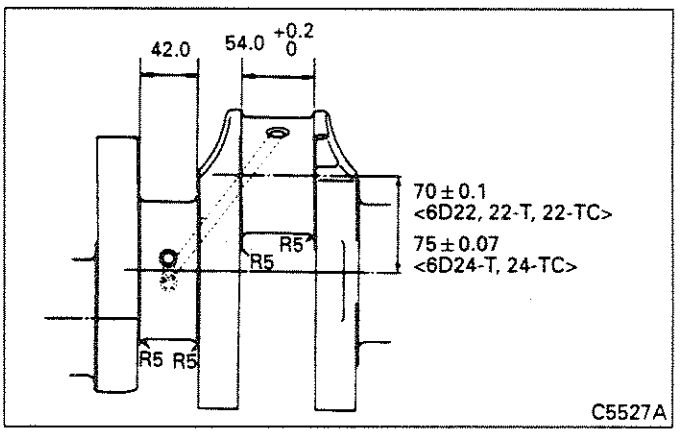

Any damaged or scorched journal or pin must be ground in accordance with the following instructions. If grinding is carried out, the main bearing must be replaced with an undersized one.

(a) Grind such that the center distance between the journal and pin does not change.
(b) Grind such that the width of the journal and pin does not change.
(c) Finish the corner fillet smoothly and to the specified radius.

(d) Use magnetic flaw detection to check for ground cracks. Also, check that the Shore hardness of the surface has not dropped below Hs 75.

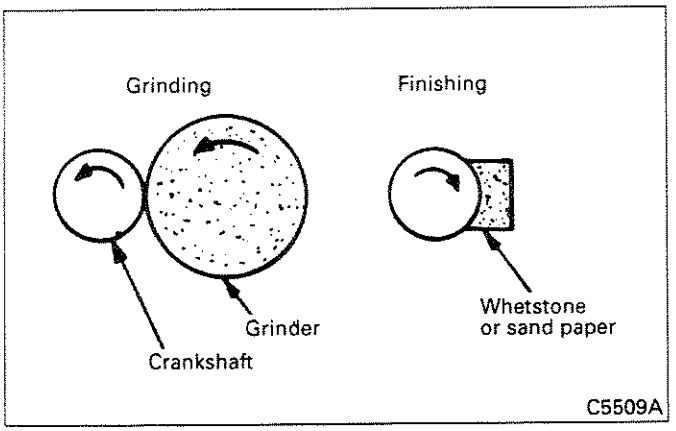

(e) When grinding, turn the crankshaft counter-clockwise as viewed from its front end. The grinder should also rotate counter-clockwise as viewed from the crankshaft's front end.

(f) When finishing the crankshaft with sandpaper or a whetstone, turn the crankshaft clockwise.

Amount of undersize	Journal O. D. finished dimension	Pin O. D. finished dimension	Roundness	Cylindricity
–0.25	99.75 $^{-0.08}_{-0.10}$	83.75 $^{-0.06}_{-0.09}$	0.01 or less	0.006 or less
–0.50	99.50 $^{-0.08}_{-0.10}$	83.50 $^{-0.06}_{-0.09}$		
–0.75	99.25 $^{-0.08}_{-0.10}$	83.25 $^{-0.06}_{-0.09}$		
–1.00	99.00 $^{-0.08}_{-0.10}$	83.00 $^{-0.06}_{-0.09}$		

5.4.3 Reassembly

NV .. Nominal Value
L..... Limit

Assembly sequence

㉑
26→22→㉕→㉔→㉓→⑳→⑲→⑰→⑱→⑯ → ②→①
⑧→⑨→7→⑥→⑤→④→③
⑩

→⑮→14→⑬→12→11

For parts with circled numbers, refer to the following section, "Reassembly Procedure."

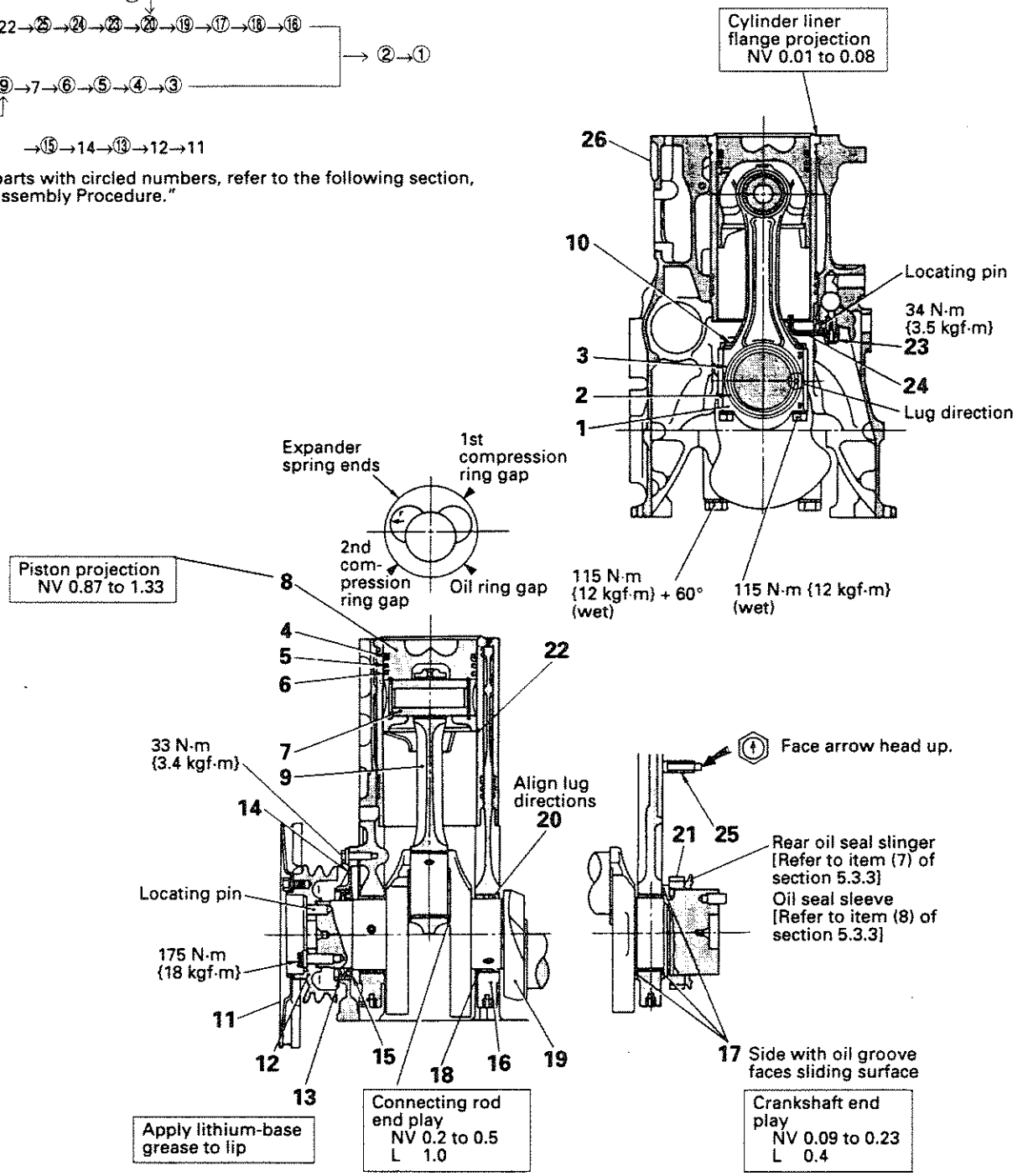

Reassembly Procedure

(1) Installing oil spray plug

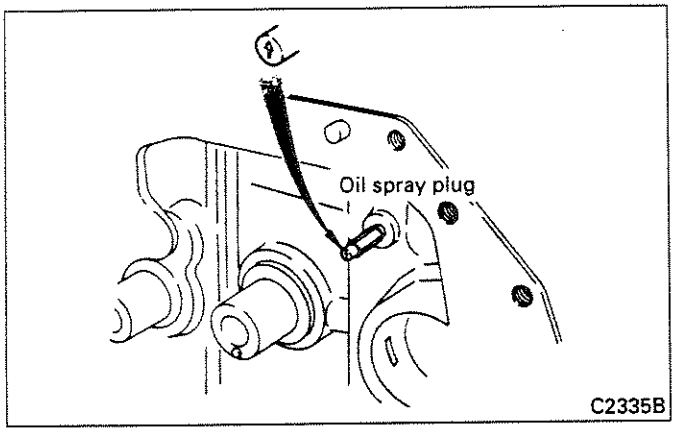

Install the oil spray plug such that the arrow stamped on it points toward the top of the engine.

(2) Installing oil jet and check valve

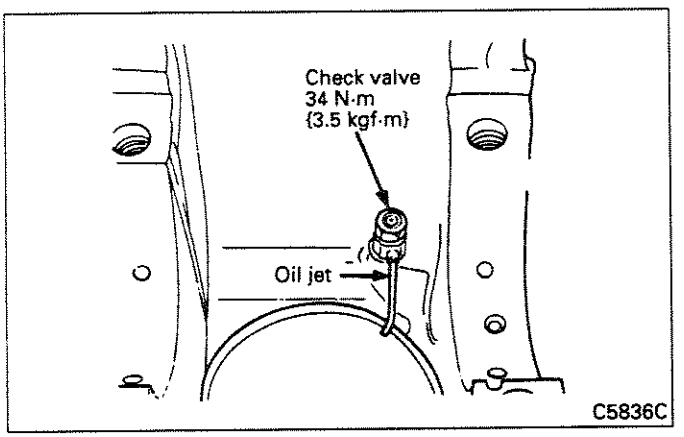

Insert the oil jet's locating pin into the hole on the crankcase, and tighten the check valve to the specified torque.

NOTE:

Check valves cannot be reused. Be sure to use a new one.

(3) Installing upper main bearing and thrust plate

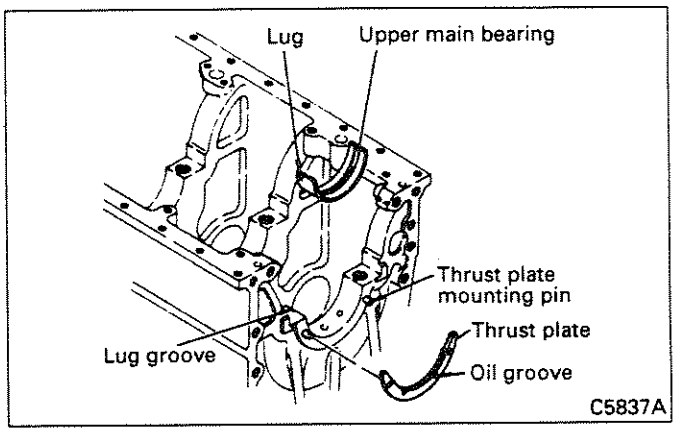

Install the upper main bearing such that the bearing lug is aligned with the lug groove on the crankcase.
Install the rearmost thrust plate with its grooveless side facing the crankcase.

NOTE:

1. **The main bearing's upper part has an oil groove. The lower part does not have a groove. Take care not to confuse the upper and lower parts.**
2. **Oversized thrust plates are available for adjustment of crankshaft end play [refer to item (6) of section 5.4.1 for details]. The oversized thrust plates available are +0.15, +0.30, and +0.45 mm. If any of these is used, ensure that the correct size thrust plate is fitted to the bearing cap [refer to item (7) for details].**

(4) Installing crankshaft gear

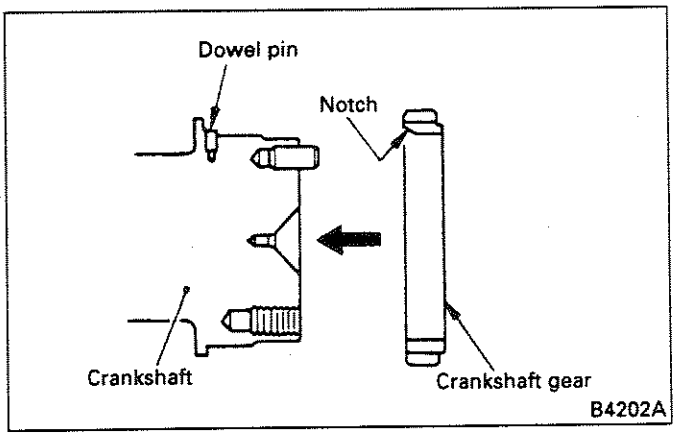

(a) Heat the gear to approximately 100°C using a piston heater.

(b) Locate the gear such that the dowel pin on the crankshaft will fit into the notch in the gear. Fit the gear by lightly striking it with a soft hammer.

(c) Fit the rear oil seal slinger (refer to item (7) of section 5.3.3) or oil seal sleeve (refer to item (8) of section 5.3.3).

(5) Fitting front oil seal slinger <Axial-lip-type oil seal>

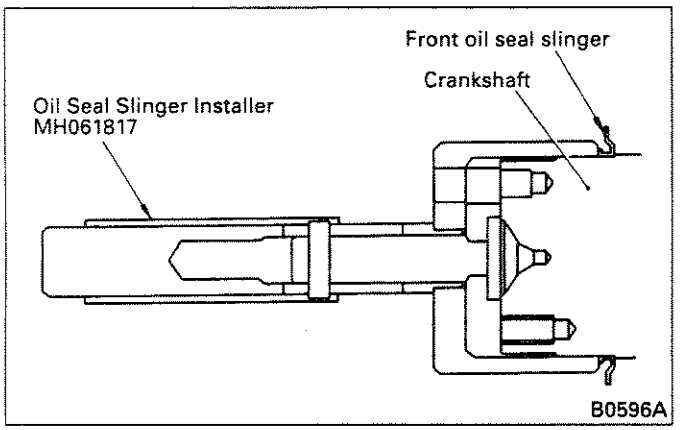

Fit the front oil seal slinger using the Oil Seal Slinger Installer (special tool).

(6) Installing crankshaft

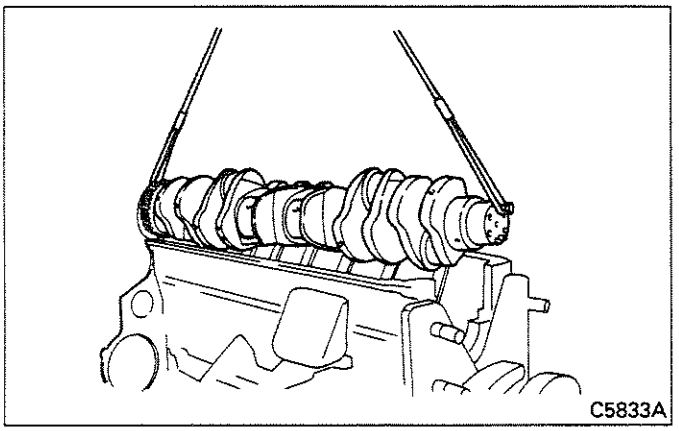

Lift the crankshaft with a hoist. Keeping it horizontal, gently lower it into the crankcase.

(7) Installing lower main bearings and main bearing caps

Install the lower main bearings and main bearing caps in accordance with the following procedure.

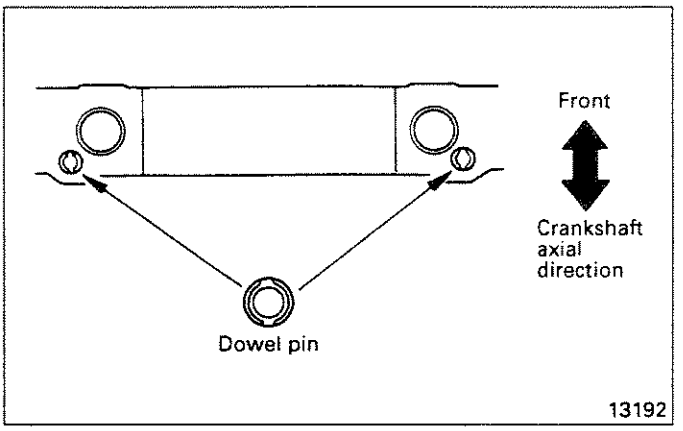

(a) Drive the locating dowel pins into the rearmost main bearing cap in the direction shown in the illustration.

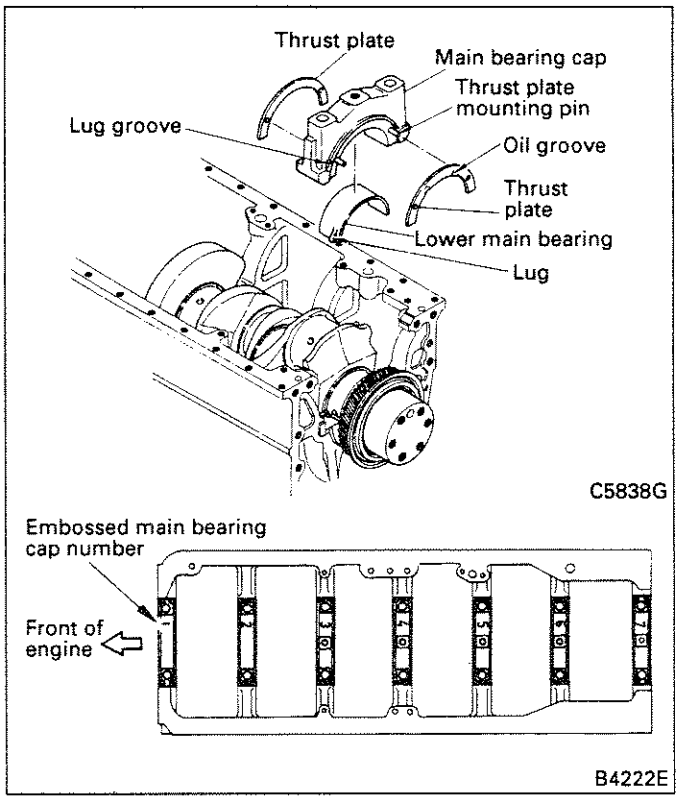

(b) Mate each main bearing with its main bearing cap, ensuring that the lugs on the bearings are aligned with the lug grooves in the caps.

(c) Only to the rearmost main bearing cap, install a thrust plate on each side, with the thrust plates' grooveless sides facing the main bearing cap.

NOTE:

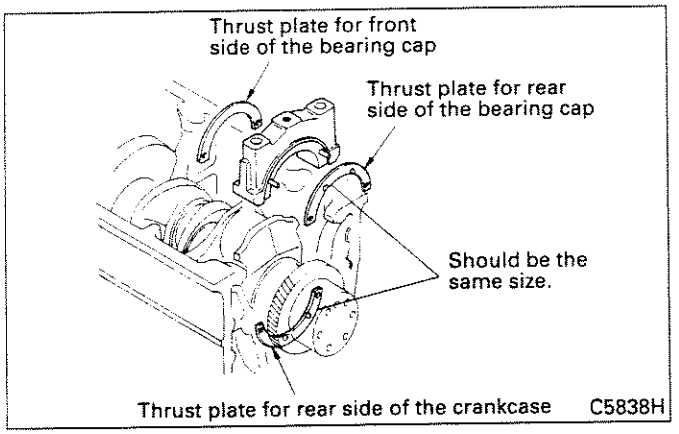

If an oversized thrust plate is used, ensure that the bearing cap rear thrust plate and the rearmost thrust plate in the crankcase [refer to item (3)] are the same size. Note, however, that the bearing cap front and rear thrust plates may be of different sizes.

(d) Fit the main bearing caps in the order of the numbers that are embossed on them, working from the front of the engine. Fit them such that the sides with lug grooves are toward the right of the engine.

(e) Press down the main bearing caps until they touch the crankcase. Tighten the main bearing cap mounting bolts to 115 N·m {12 kgf·m} (wet).
After confirming that the bolts are tightened to the specified torque, give each one an extra turn in accordance with the following procedure.

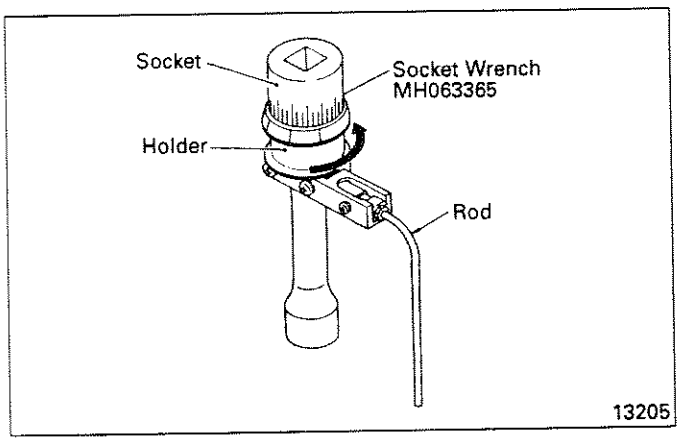

1) Before fitting the Socket Wrench (special tool) over a main bearing cap mounting bolt, turn the holder counter-clockwise to tension the built-in socket spring.

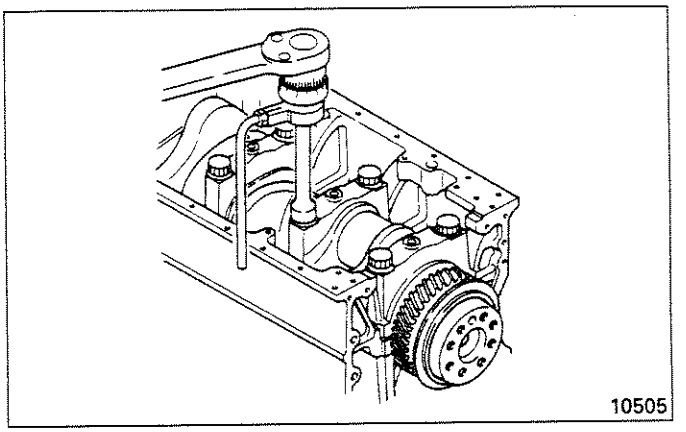

2) Fit the socket over the main bearing cap mounting head bolt. Set it such that the built-in spring forces the rod against the side of the crankcase.

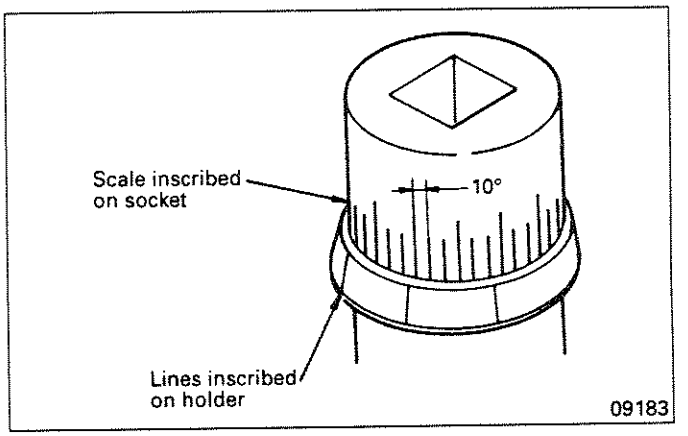

3) Observing the inscribed lines on the holder and socket, turn the socket 60° clockwise (1 pitch = 10°) to fully tighten the bolt. After assembly, check that the crankshaft can be turned easily by hand. Also, check that the crankshaft's end play conforms with the specified nominal value. [Refer to item (6) of section 5.4.1 for details.]

(8) Installing connecting rod bolts

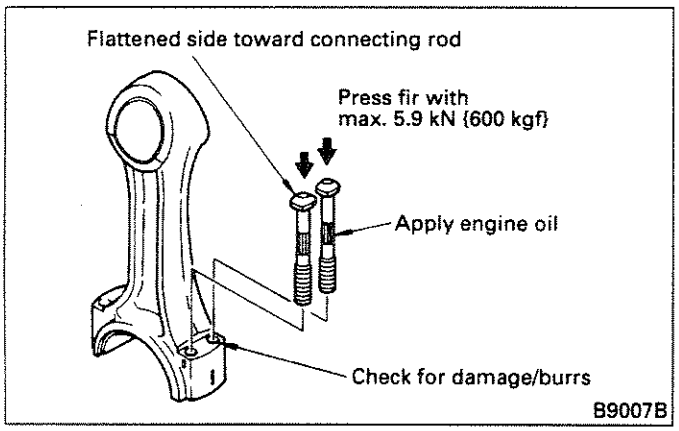

Check that there are no burrs or damage in the connecting rod's bolt holes. Apply engine oil to the connecting rod bolts, then press fit the bolts such that the flattened side of their heads face inward.

(9) Reassembling piston and connecting rod

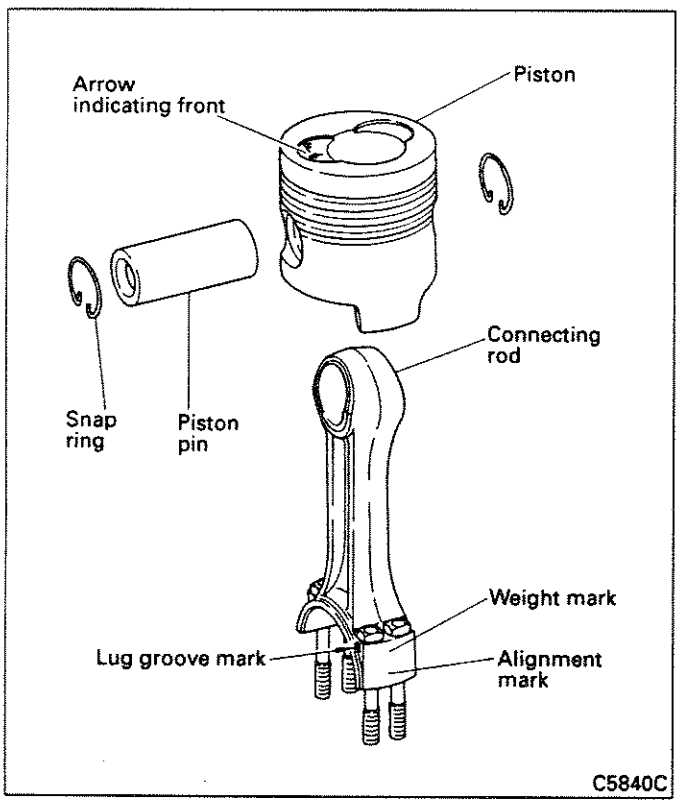

Connect the piston to the connecting rod with the piston pin such that the piston's front mark is on the same side as the connecting rod's lug groove mark.
If the piston pin is difficult to insert, heat the piston in hot water or with a piston heater.

NOTE:
All the connecting rods in an engine must have the same weight mark. Weight marks are as follows:

Heavy ←——————————→ Light
A B C D E F G H J K

(10) Fitting piston rings

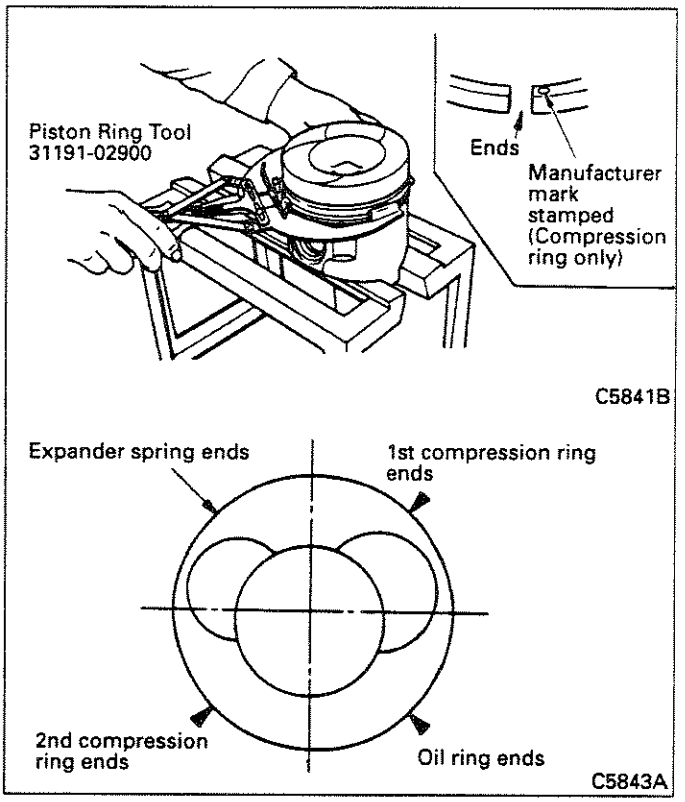

Using the Piston Ring Tool (special tool), fit the piston rings in the positions shown in the illustration. Ensure that the manufacturer's marks on the compression rings face upward. Fit the rings in the following order:

1. Oil ring
2. 2nd compression ring
3. 1st compression ring

(11) Installing upper and lower connecting rod bearings

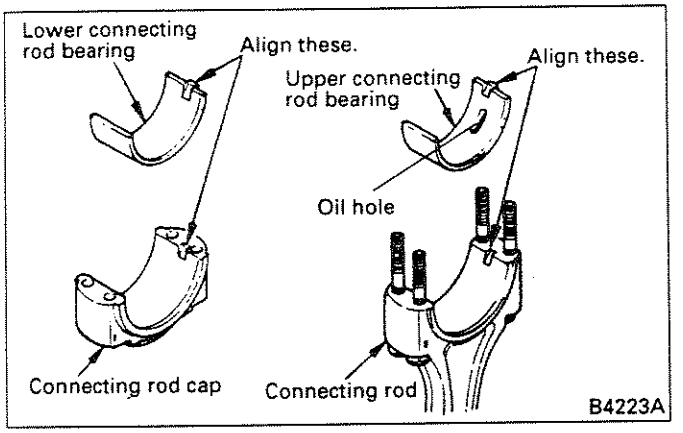

Install the upper connecting rod bearing such that its lug is aligned with the connecting rod's lug groove. Install the lower connecting rod bearing such that its lug is aligned with the connecting rod cap's lug groove.

NOTE:

The upper connecting rod bearing has an oil hole. The lower bearing does not have an oil hole. Take care not to confuse the upper and lower parts.

(12) Installing piston and connecting rod

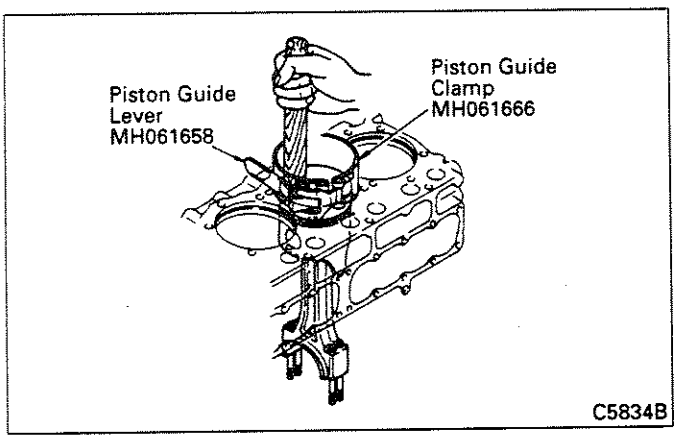

Using the Piston Guide Clamp and Piston Guide Lever (special tools), install the piston and connecting rod such that the front mark on the piston's crown faces the front of the engine.

NOTE:

1. **Check that the size mark on the piston matches the size mark on the cylinder liner.**
2. **Ensure that the piston ring ends stay in their correct positions.**
3. **Slip some plastic tube over the connecting rod bolts to prevent them from damaging the cylinder liner and crankshaft pin.**

<Using the Piston Guide Clamp and Piston Guide Lever (special tools)>

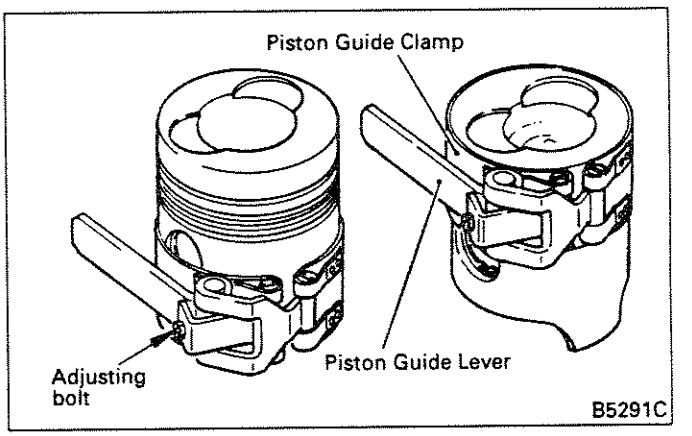

Align the Piston Guide with the piston skirt and set the Piston Guide Lever in position. Turn the adjusting bolt such that the Clamp's inside diameter matches the piston's outside diameter. Next, remove the Clamp from the piston and apply engine oil to the outside of the piston, to the inside of the Clamp, and to the inside of the cylinder liner.

Fit the Clamp over the piston such that it is flush with the piston's crown. Using a wooden mallet or block, tap the piston into the cylinder, taking care not to damage it.

(13)Fitting connecting rod caps

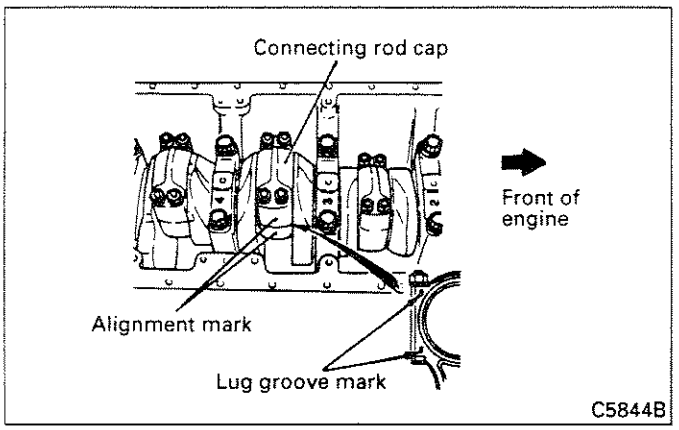

Ensure that the alignment marks and lug groove marks on the connecting rod caps and connecting rods are aligned with each other.

(14)Check the connecting rod's end play. [Refer to item (2) of section 5.4.1 for details.]

(15)Check that the piston projections conform with specifications. [Refer to item (1) of section 5.4.1 for details.]

(16)Fitting front oil seal

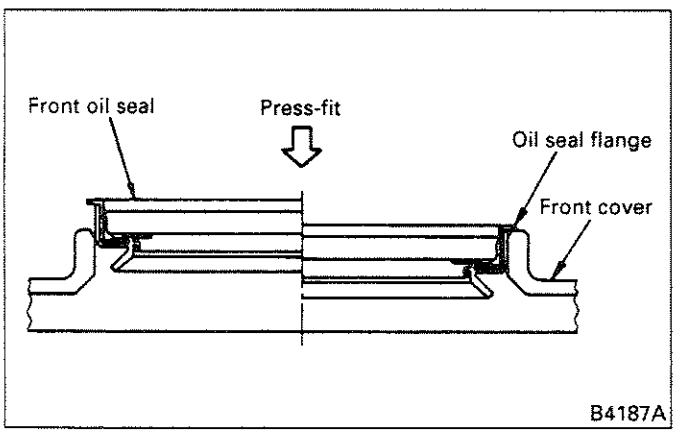

Press evenly around the oil seal's entire periphery until its flange is seated securely on the front cover.

5.5 Inspecting and Adjusting Valve Clearances

Valve clearances should be checked and adjusted when the engine is cold.

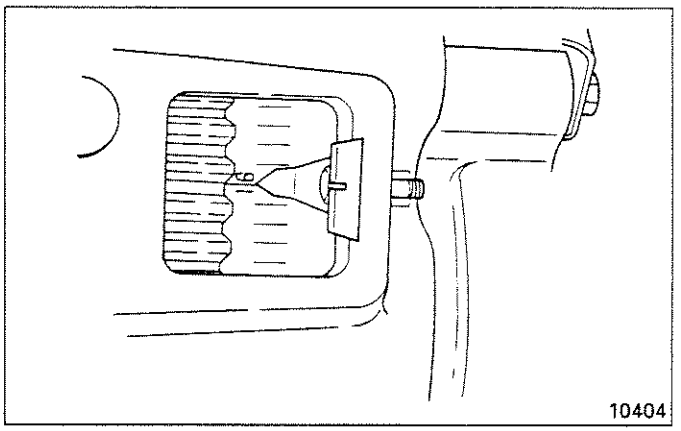

(1) Crank the engine until the inscribed "1·6" mark on the flywheel is aligned with the pointer in the flywheel housing inspection window. When this happens, the pistons whose push rods are not pushing up their rockers are at the top-dead-center (TDC) position of their compression stroke.

(2) When piston No. 1 is at the TDC position of its compression stroke, check and adjust the clearances of the valves marked "○" in the following table. When piston No. 6 is at the TDC position of its compression stroke, check and adjust the clearances of the valves marked "×" in the table. Be sure to check and adjust every valve.

Cylinder No.	1		2		3		4		5		6	
Valve arrangement	In.	Ex.	In.	Ex.	In.	Ex.	In.	Ex.	In.	Ex.	In.	Ex.
No. 1 at TDC of compression stroke	○	○	○			○	○			○		
No. 6 at TDC of compression stroke				×	×			×	×		×	×

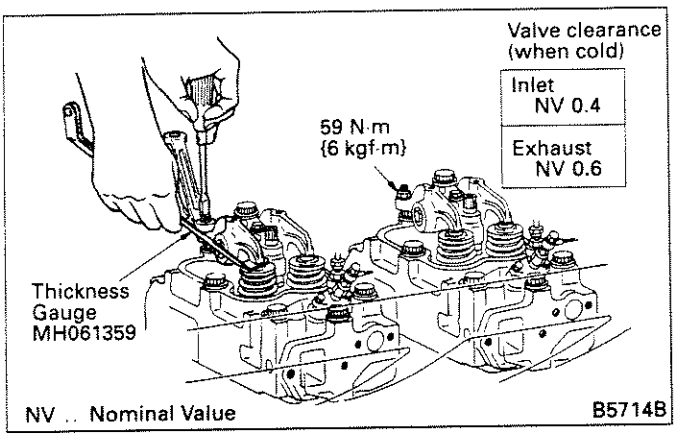

(3) Using the Thickness Gauge (special tool), check that the rocker arm-to-valve cap clearance conforms to specifications. To measure the clearance, insert a gauge of the same thickness as the specified nominal clearance between the rocker arm and valve cap. The gauge should be able to move in the gap, but not loosely.
If the clearance is incorrect, loosen the lock nut and turn the adjusting screw as required. When the clearance is correct, tighten the lock nut to the specified torque to secure the adjusting screw.

NOTE:
After tightening the lock nut, confirm that the clearance is still correct.

6. TROUBLESHOOTING

Symptom	Probable cause	Remedy	Reference
Engine will not start	Incorrect oil viscosity	Replace	Group 12
	Incorrect/defective fuel		Group 13
	Low compression pressure • Incorrect valve clearance(s)	Adjust	
	• Defective cylinder head gasket	Replace	
	• Worn valve and valve seat/carbon deposits		
	• Weakened valve spring		
	• Worn/damaged piston ring(s)		
	• Worn/damaged piston ring groove(s)		
	• Worn piston(s)/cylinder liner(s)	Change to oversize	
	Defective preheater • Defective starter switch	Repair or replace	Group 16
	• Defective heater relay		
	Incorrect injection timing	Adjust	Group 13
	Insufficient fuel injection volume • Defective injection pump	Repair or replace	Group 13
	• Incorrect fuel injection volume		
	Defective cooling system	Repair or replace	Group 14
Rough idling	Incorrect oil viscosity	Replace	Group 12
	Incorrect/defective fuel		Group 13
	Defective cooling system	Repair or replace	Group 14
	Low compression pressure (see "Engine will not start")		
	Incorrect injection timing	Adjust	Group 13
	Defective fuel system • Defective injection pump	Repair or replace	Group 13
	• Defective injection nozzle		
	• Air trapped in fuel system		
Abnormal exhaust gas color	Incorrect/defective fuel	Replace	Group 13
	Cooling system malfunctioning	Repair or replace	Group 14
	Intake/exhaust system malfunctioning • Clogged air cleaner	Repair or replace	Group 15
	• Clogged muffler		
	• Oil leaking into intake/exhaust pipes		
	Low compression pressure (see "Engine will not start")		
	Defective fuel system • Malfunctioning injection pump	Repair or replace	Group 13
	• Defective injection nozzle		
	Incorrect injection timing	Adjust	
	Excessive engine oil	Adjust	Group 12
	Seizure of major moving parts	Repair or replace	

Symptom	Probable cause	Remedy	Reference
Low power output	Incorrect oil viscosity	Replace	Group 12
	Incorrect/defective fuel		Group 13
	Cooling system malfunctioning	Repair or replace	Group 14
	Intake/exhaust system malfunctioning • Clogged air cleaner	Repair or replace	Group 15
	• Clogged muffler		
	Low compression pressure (see "Engine will not start")		
	Fuel system malfunctioning • Malfunctioning injection pump	Repair or replace	Group 13
	• Defective injection nozzle		
	• Air trapped in fuel system		
	Incorrect injection timing	Adjust	
Excessive oil consumption	Oil leaking from lubrication system	Inspect and/or repair	Group 12
	Oil leaking from engine and related parts • Defective gasket/oil seal	Replace	
	Oil entering combustion chamber past piston • Worn cylinder liner(s)/piston(s)	Rectify or replace	
	• Piston ring(s) worn, damaged, or seized	Replace whole set	
	• Clogged piston/oil ring oil hole(s)	Clean	
	Oil entering combustion chamber via valves • Worn valve stem(s)/valve guide(s)	Replace	
	• Worn valve stem seal(s)		
Abnormal engine noise	Noise emanating from outside parts of engine • Loose piping/hose connection(s)	Inspect	
	• Injection pump, alternator, other auxiliary unit(s) incorrectly mounted	Inspect and/or adjust	Groups 13 and 16
	• Loose/damaged V-belt	Replace	Group 14
	• Incorrectly mounted crankshaft pulley	Inspect and/or adjust	
	• Malfunctioning air cleaner and/or muffler	Repair or replace	Group 15
	Noise emanating from vicinity of rocker cover • Incorrect valve clearance(s)	Adjust	
	• Defective valve spring(s)	Replace	
	• Defective rocker shaft/bracket	Inspect and/or repair	
	• Improper lubrication of rocker shaft	Inspect	

Symptom	Probable cause	Remedy	Reference
Abnormal engine noise	Noise emanating from vicinity of flywheel housing • Incorrect timing gear backlash	Replace	
	• Incorrect lubrication of timing gears and idler shaft	Inspect	
	Noise emanating from cylinder head/crankcase • Low compression pressure (see "Engine will not start")		
	• Incorrect injection timing	Adjust	Group 13
	• Incorrect spray of injection nozzles	Repair or replace	
	• Worn connecting rod small end bushing(s) and piston pin(s)	Replace	
	• Worn/damaged crankshaft pin(s) and connecting rod big end bearing(s)		
	• Worn/damaged crankshaft journal(s) and main bearing(s)		
	• Excessive crankshaft/camshaft end play	Replace thrust plate(s)	
	• Worn tappet(s)/camshaft	Replace worn part(s)	
	Turbocharger malfunctioning	Inspect and/or rectify	Group 15

ENGINE <8DC>

CONTENTS

1. GENERAL 2
2. SPECIFICATIONS 7
3. SERVICE STANDARDS 8
3.1 Service Standards Table 8
3.2 Tightening Torque Table 11
4. SPECIAL TOOLS 12
5. SERVICE PROCEDURES 16
5.1 Measuring Compression Pressure 16
5.2 Cylinder Head and Valve Mechanism ... 17
5.2.1 Disassembly 17
5.2.2 Inspection 19
5.2.3 Reassembly 25
5.3 Flywheel, Timing Gear, and Camshaft 28
5.3.1 Disassembly 28
5.3.2 Inspection 31
5.3.3 Reassembly 36
5.4 Crankcase and Main Moving Parts 41
5.4.1 Disassembly 41
5.4.2 Inspection 46
5.4.3 Reassembly 56
5.5 Inspecting and Adjusting Valve Clearances 62
6. TROUBLESHOOTING 64

1. GENERAL

(1) Combustion chamber

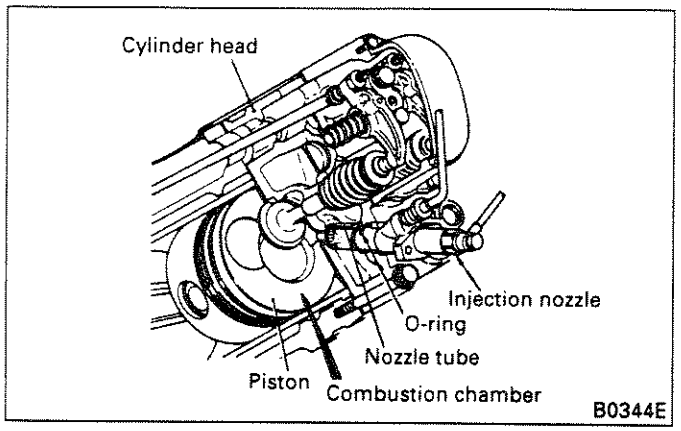

The combustion chambers are formed by the cylinder head and piston. The injection nozzles, sheathed by the nozzle tubes, are mounted on the cylinder head. The nozzle tubes hold the nozzles and protect them from cooling water. Since the nozzle tubes are exposed to the water in the water jacket, they are sealed by O-rings at the top and by staking at the bottom. Combustion is effected by compression of fuel injected directly into the combustion chamber.

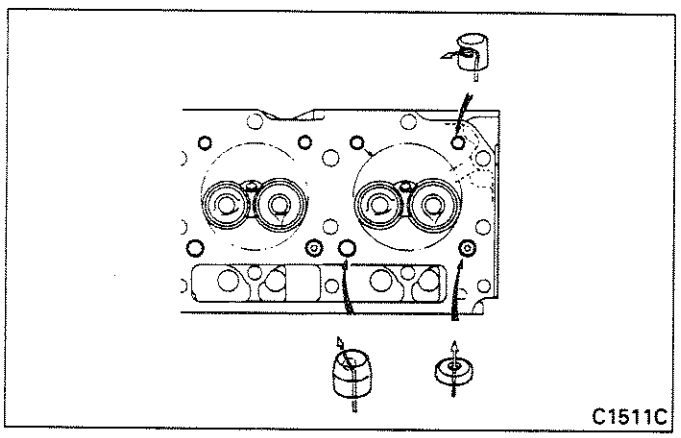

Water directors pressed into the bottom of the cylinder head optimize cooling of the combustion chamber by directing the flow of coolant.

(2) Valve mechanism

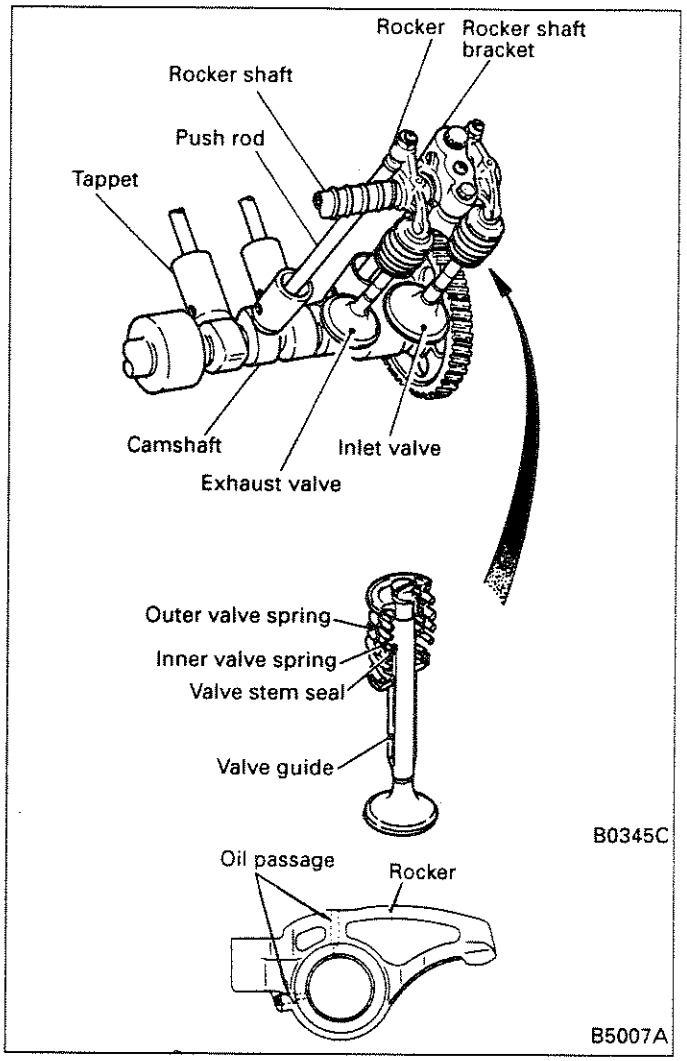

The valve mechanism is of an overhead-valve (OHV) type and is constructed as shown in the diagram.

(a) Valve stem seals are fitted to the inlet and exhaust valve stems to control the amount of lubricant flowing onto the sliding surfaces of the valves and valve guides.

(b) The inlet and exhaust valve springs are unevenly pitched. There are inner and outer springs, and these are wound in opposite directions.

(c) The rocker and rocker shaft are supported by the rocker shaft bracket. The rocker shaft is a hollow cylinder sealed with an expansion plug at each end. The inside of the shaft forms an engine oil passage.

(d) A steel ball is welded to the bottom end of each push rod, and a spherical concave piece is welded to the top end.

(e) The tappets are cylindrical. To help prevent localized wear, the areas that make contact with the camshaft are large-diameter spherical surfaces. If the side cover is removed, the tappets can be removed and reinstalled easily without removing the camshaft.

(f) The camshaft is held by camshaft bushings which, in turn, are located in the "V" of the crankcase. The camshaft actuates the valves in both the left bank and right bank. The cam profiles are specially curved to achieve smooth acceleration.

(3) Crankcase and cylinder liner

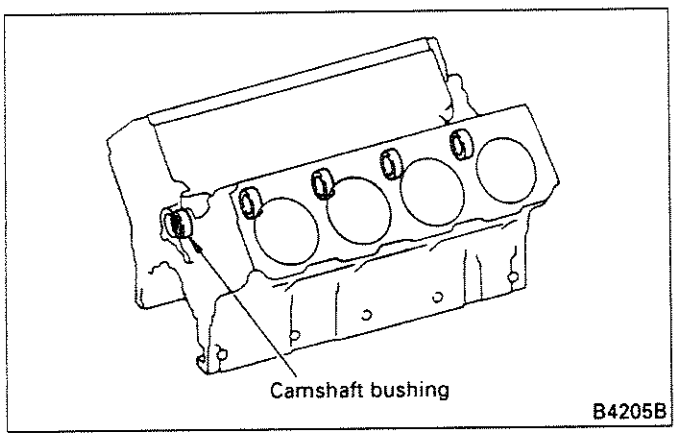

(a) Five camshaft bushings are inserted in the camshaft journal sections (i.e., bearing sections) of the crankcase. To facilitate removal and reinstallation of the camshaft from the rear end of the case, the diameter of each bushing is smaller toward the front.

(b) Cylinder liner

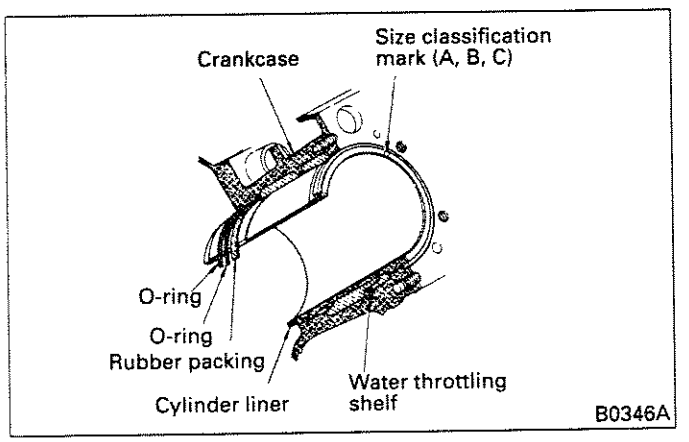

The cylinder liner is fitted into the crankcase and held by it at the top and bottom. At the bottom of the cylinder liner, O-rings and rubber packing are provided to seal off oil and coolant. They also minimize the clearance between the cylinder and crankcase, thus preventing cavitation which would otherwise be caused by vibration of the wall surface. The rubber is particularly effective in preventing the ingress of coolant through the cylinder liner's fitting points. If coolant entered, it would cause pitting of the crankcase.

(4) Piston and piston rings

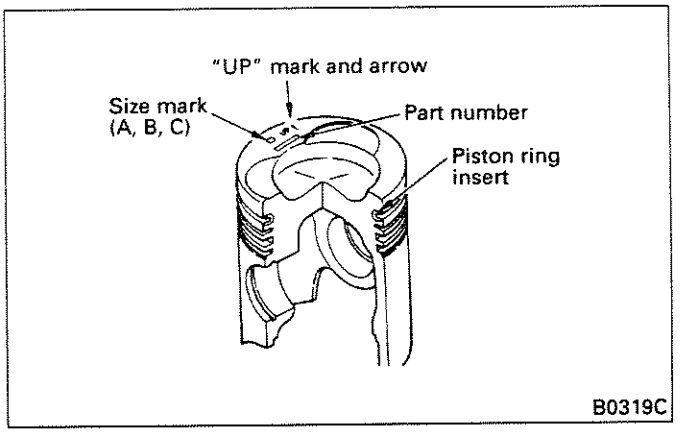

(a) The piston is an aluminum alloy casting, and its crown is shaped to form a combustion chamber. A piston ring insert is cast into the 1st piston ring groove to improve durability.
To ensure the best possible fit between the piston and cylinder liner, a size mark is stamped on the piston head. An "UP" mark and arrow are also stamped to indicate the piston installation direction.
The piston pin is fully floating and held in position with a snap ring at each end.

(b) Piston rings

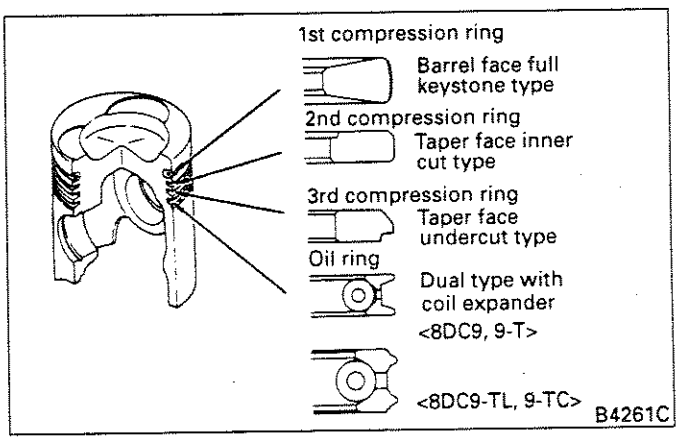

Three compression rings and one oil ring are fitted to each piston. They are shaped as shown in the diagram.

(5) Connecting rod and connecting rod bearings

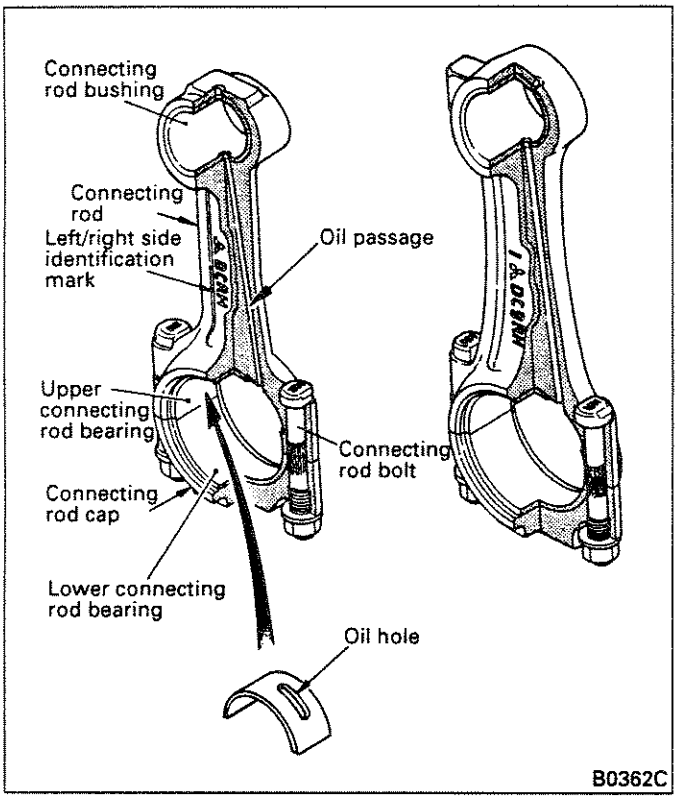

The connecting rod is a highly rigid I-section forging. A bushing is pressed into the small end, and a split-type plain bearing is used at the big end. Since it is a split-type bearing, the connecting rod bearing has an upper half and lower half. The upper half has an oil hole. This oil hole is in line with the oil passage inside the connecting rod. Engine oil for lubrication of the small end bushing is supplied via the hole.
The connecting rod and connecting rod cap are held together by two connecting rod bolts.

(6) Crankshaft and main bearings

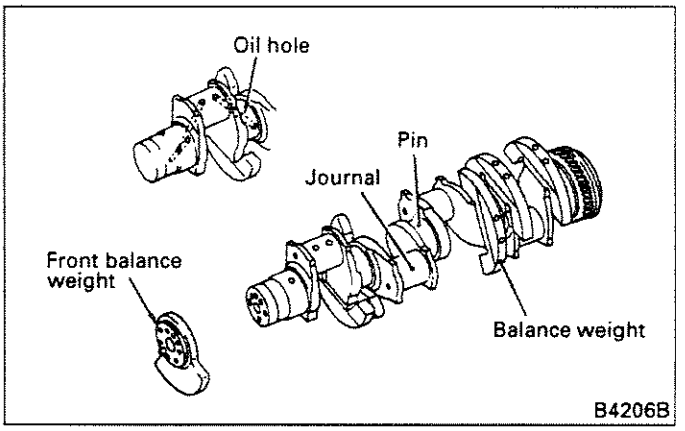

(a) The crankshaft is a highly rigid forging.
Between each journal and pin is an oil hole via which oil passes to lubricate the journal and pin.
To keep the crankshaft well balanced during operation, it has six balance weights on its webs plus a front balance weight at the front.

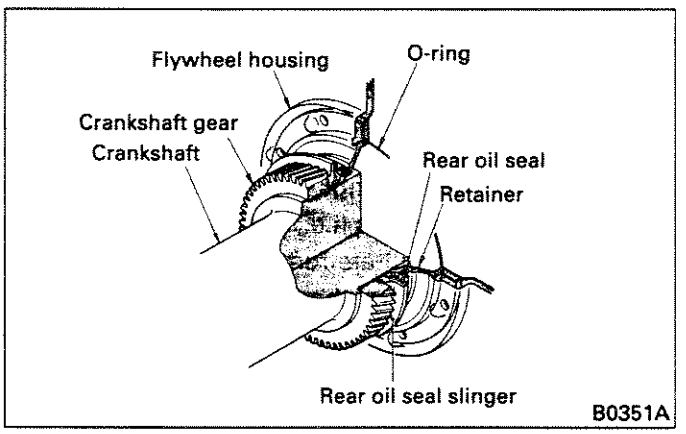

(b) The crankshaft gear that drives the timing gears is fitted on the rear of the crankshaft. Also, a rear oil seal on the rear of the crankshaft prevents oil leaks.

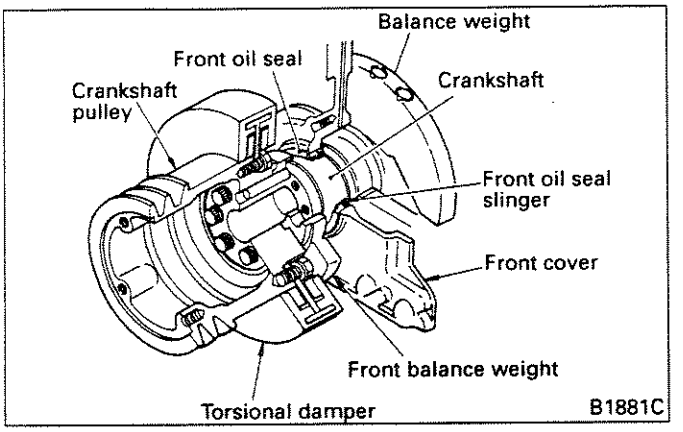

(c) The crankshaft pulley is mounted on the front of the crankshaft. In certain 8DC engines, a torsional damper is mounted on the crankshaft pulley to absorb the crankshaft's torsional vibration.
An oil seal is fitted to the front cover to prevent oil leaks.

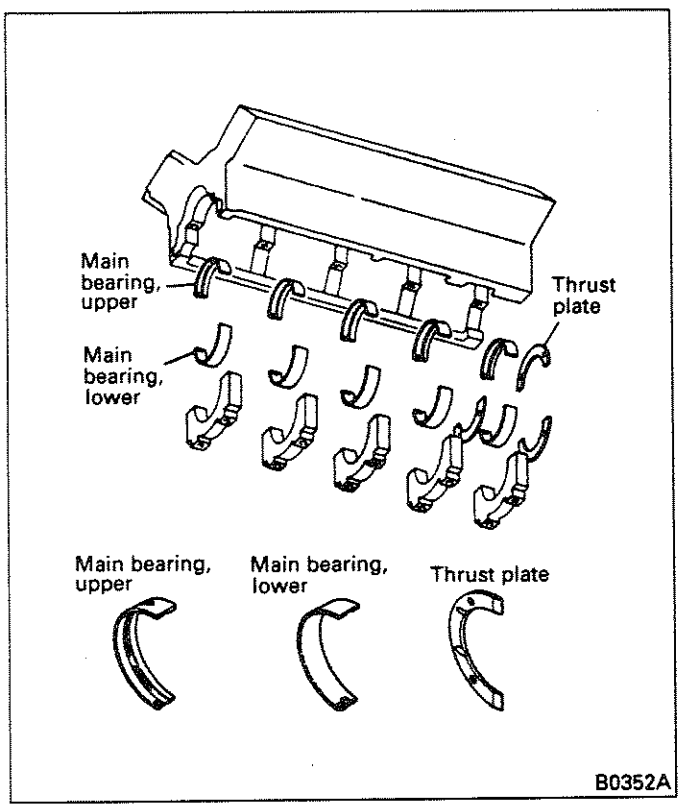

(d) Main bearings

The main bearings are split-type plain bearings with upper and lower halves. The inside surface of each upper half has an oil groove plus an oil hole that lines up with the oil hole of the crankcase.

The rearmost bearing cap is fitted with a split-type thrust plate to support the thrust of the crankshaft.

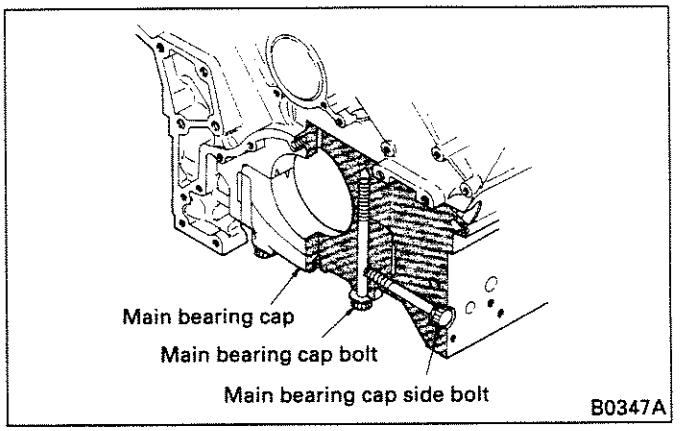

The main bearing is secured to the crankcase with side bolts.

(7) Timing gears

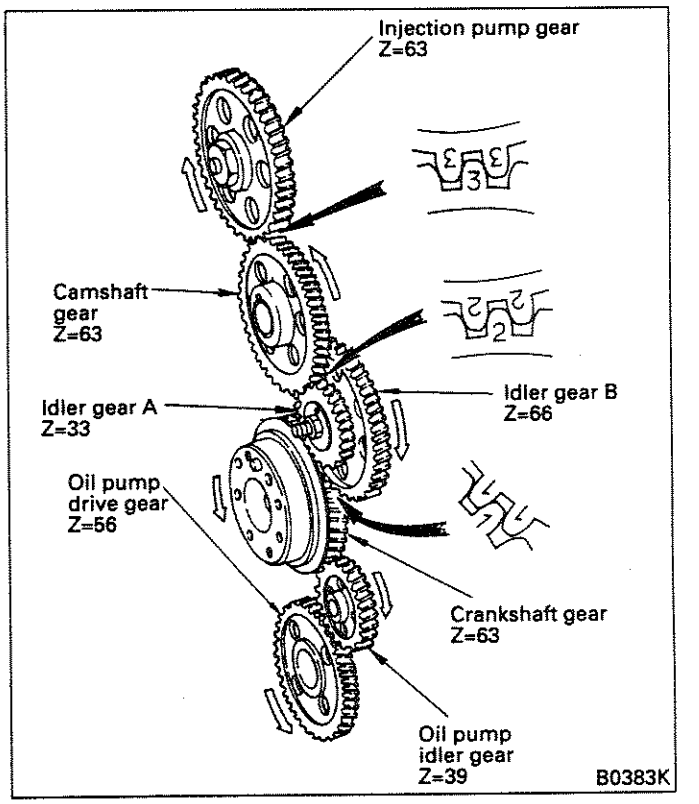

The timing gears are located in the flywheel housing at the rear of the engine. The geartrain is as shown in the diagram.
The timing gears are helical, and each is stamped with a timing mark. The timing marks ensure that the gears mesh correctly when reassembled.

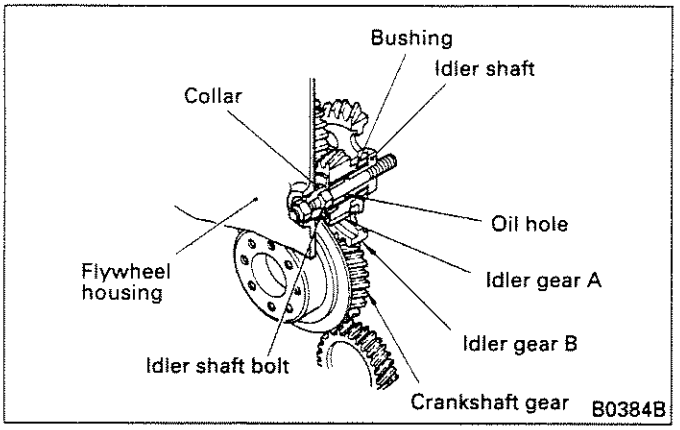

The crankshaft gear is pressed onto the crankshaft and held in place with dowel pins. The crankshaft gear drives the other gears.
The idler gears turn on the idler shaft which is supported at one end by the crankcase at the other end by the flywheel housing by means of the idler shaft bolt.
The idler gears A, B have bushings press-fitted in their center holes and turn on the idler shaft.
The bushings are lubricated by oil that flows through the inside of the idler shaft from the crankcase oil hole.

(8) Flywheel

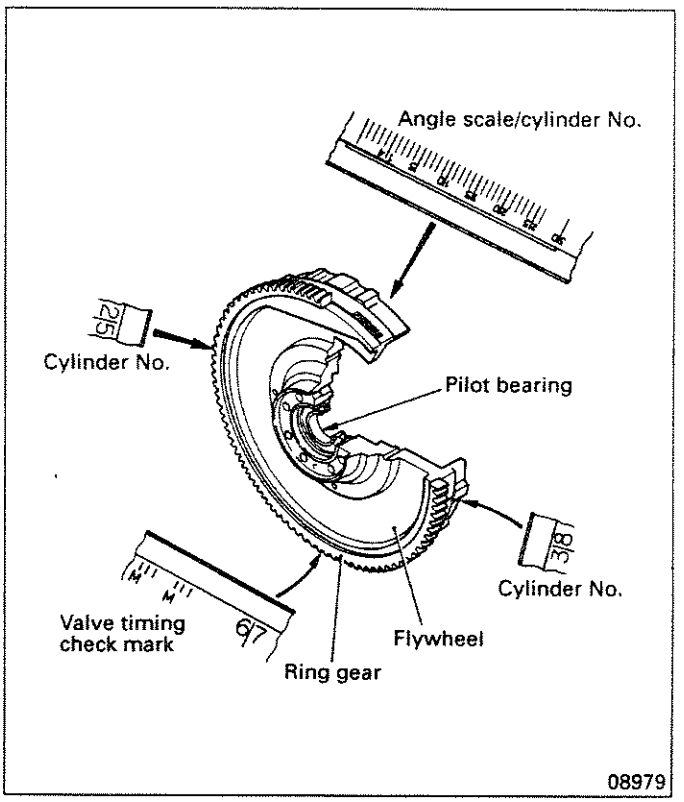

The flywheel has a pilot bearing at its center as a support for the clutch shaft. The outer ring gear that meshes with the starter pinion is shrink-fitted on the flywheel.
The ring gear teeth are chamfered on one side to ensure that the starter pinion engages easily.
Cylinder numbers, an angle scale, and valve timing marks (check marks) are stamped on the outside edge of the flywheel.

2. SPECIFICATIONS

Item	Specification		
Engine model	8DC9	8DC9-T	8DC9-TL, 9-TC
Type	V8 (90°) water-cooled, 4-cycle diesel	V8 (90°) water-cooled, 4-cycle diesel	V8 (90°) water-cooled, 4-cycle diesel
Combustion chamber type	Direct injection	Direct injection	Direct injection
Valve mechanism	Overhead valve	Overhead valve	Overhead valve
Cylinder bore x stroke mm	135 x 140	135 x 140	135 x 140
Total displacement cm^3	16031	16031	16031
Compression ratio	17	16	15.5
Fuel injection sequence	1→2→7→3→4→5→6→8	1→2→7→3→4→5→6→8	1→2→7→3→4→5→6→8
Cylinder liner type	Wet	Wet	Wet
Piston type	Trunk-type slipper skirt	Trunk-type slipper skirt	Trunk-type slipper skirt
No. of piston rings	Compression ring: 3, Oil ring: 1	Compression ring: 3, Oil ring: 1	Compression ring: 3, Oil ring: 1

3. SERVICE STANDARDS

3.1 Service Standards Table

Unit: mm

Maintenance item		Nominal value (Basic diameter in [ ])	Limit	Remedy and remarks
Compression pressure (at 200 rpm)		2.75 MPa {28 kgf/cm²}	1.96 MPa {20 kgf/cm²}	Adjust until difference between cylinders is 390 kPa {4 kgf/cm²} or less
Rocker-to-rocker shaft clearance		[28] 0.03 to 0.08	0.2	Replace bushing. Clearance in engine not to exceed 0.08.
Outer valve spring	Free length	89.38	85	Replace
	Installed load N {kgf} (installed length: 58.35)	470 {48.0}	400 {41.0}	
Inner valve spring	Free length	65.04	62	Replace
	Installed load N {kgf} (installed length: 50.35)	190 {19.5}	160 {16.6}	
	Squareness	–	2.5	
Tappet-to-crankcase tappet hole clearance		[35] 0.06 to 0.10	0.2	Replace
Runout of push rod		–	0.5	Replace
Cylinder head bottom surface distortion		0.07 or less	0.2	Correct or replace
Cylinder head height (from top to bottom surface)		114.9 to 115.1	114.6	Replace
Valve stem outside diameter	Inlet valve	11.95 to 11.96	11.85	Replace
	Exhaust valve	11.91 to 11.93		
Valve guide-to-valve stem clearance	Inlet valve	[12] 0.05 to 0.09	0.2	Replace valve guide
	Exhaust valve	[12] 0.09 to 0.12		
Valve margin	Inlet valve	2.2	1.7	Reface or replace
	Exhaust valve	2.5	2.0	
Valve seat angle		45°	–	
Valve sinkage from cylinder head bottom surface	Inlet valve	0.25 to 0.75	1.0	Replace valve seat insert (– shows projection)
	Exhaust valve	–0.05 to 0.45	0.7	
Valve seat insert seat width	Inlet valve	2.69 to 2.97	3.5	Correct or replace
	Exhaust valve			
Timing gear backlash	Between crankshaft gear and idler gear	0.08 to 0.20	0.4	Inspect
	Between idler gear and camshaft gear	0.07 to 0.18		
	Between injection pump gear and camshaft gear	0.08 to 0.20		

Unit: mm

Maintenance item		Nominal value (Basic diameter in [ ])	Limit	Remedy and remarks	
Idler gear end play		0.05 to 0.15	0.4	Replace thrust plate	
Camshaft gear end play		0.11 to 0.2	0.4		
Flywheel	Friction surface distortion	0.1 or less	0.2	Correct or replace	
	Depth from clutch cover mounting surface to friction surface	48	49.5	Replace	
	Friction surface runout (when fitted)	–	0.2	Correct or replace	
Clearance between idler gear and idler shaft		[40] 0.03 to 0.06	0.2	Replace bushing	
Cam profile (difference between lobe height and base circle diameter)	Inlet	8.86	8.36	Replace	Lobe height: 56.138 Base circle diameter: 47.282
	Exhaust	8.78	8.36	Replace	Lobe height: 56.017 Base circle diameter: 47.239
Camshaft journal-to-camshaft bushing clearance	No.1	[65.25] 0.07 to 0.10	0.25	Replace bushing	
	No.2	[65.25] 0.07 to 0.10			
	No.3	[65.50] 0.07 to 0.10			
	No.4	[65.75] 0.07 to 0.10			
	No.5	[66.00] 0.07 to 0.10			
Camshaft bend		0.05 or less	0.08	Replace	
Interference between camshaft and camshaft gear		[40] 0.02 to 0.05	–	Reassembly must be limited to three times	
Flywheel housing eccentricity		–	0.2	Correct	
Connecting rod end play		0.4 to 0.8	1.0	Replace	
Projection of piston from top surface of crankcase	8DC9	0.75 to 1.25	–	Inspect	
	8DC9-T, 9-TL, 9-TC	0.65 to 1.15	–		
Crankshaft end play		0.15 to 0.29	0.4	Replace thrust plate	
Crankcase top surface distortion		0.07 or less	0.2	Correct or replace	
Cylinder liner	Bore	135 to 135.04	135.25	Replace or regrind to an oversize	
	Flange projection	0.08 to 0.17	–		
	Cylindricity	0.02 or less	–		
Clearance between piston and cylinder liner	8DC9	[135] 0.163 to 0.189	–	Correct or replace cylinder, or replace piston	
	8DC9-T	[135] 0.193 to 0.219	–		
	8DC9-TL, 9-TC	[135] 0.183 to 0.209	–		

Unit: mm

Maintenance item			Nominal value (Basic diameter in [ ])	Limit	Remedy and remarks
Clearance between piston ring grooves and piston rings	1st compression ring		0.02 to 0.10	0.25	Replace piston ring or piston
	2nd compression ring	8DC9	0.05 to 0.08	0.25	
		8DC9-T, 9-TL, 9-TC	0.07 to 0.10		
	3rd compression ring	8DC9	0.05 to 0.08	0.15	
		8DC9-T, 9-TL, 9-TC	0.07 to 0.10		
	Oil ring		0.03 to 0.06	0.15	
Piston ring end gap		1st ring, Oil ring, 3rd ring	0.4 to 0.6	1.5	Replace
		2nd ring	0.4 to 0.55		
Clearance between piston pin and piston pin hole			[50] 0.01 to 0.02	0.1	Replace piston or piston pin
Clearance between piston pin and connecting rod small end bushing			[50] 0.01 to 0.05	0.1	Replace bushing
Connecting rod bend and torsion			–	0.05 or less	Correct or replace
Connecting rod bearing span when free			–	Less than 95.5	Replace
Connecting rod bearing-to-crankshaft pin clearance			[90] 0.05 to 0.11	0.25	Replace bearing
Main bearing-to-crankshaft journal clearance			[100] 0.06 to 0.12	0.25	Replace bearing
Main bearing span when free			–	Less than 106.5	Replace
Crankshaft pin and journal		Roundness	0.01 or less	0.08	Grind to undersize
		Cylindricity	0.006 or less	–	
Crankshaft bend			0.03 or less	0.1	Correct or replace
Valve clearance (when cold)		Inlet	0.4	–	Adjust
		Exhaust	0.6	–	

3.2 Tightening Torque Table

Location tightened	Screw size O. D. x pitch mm	Tightening torque N·m {kgf·m}	Remarks
Cylinder head bolt	M14 x 2	175 {18}	Wet
	M16 x 2	285 {29}	Wet
Rocker shaft bracket mounting bolt	M12 x 1.75	49 {5}	
Crankcase side cover bolt	M10 x 1.5	2.9 {0.3}	
Rocker cover bolt	M8 x 1.25	3.9 {0.4}	
Rocker adjusting screw lock nut	M10 x 1.25	59 {6}	
Flywheel mounting bolt	M16 x 1.5	315 {32}	Wet
Idler shaft bolt	M16 x 2	155 {16}	
Idler shaft nut	M16 x 1.5	98 {10}	
Flywheel housing bolt	M12 x 1.75	69 {7}	
Connecting rod cap bolt	M16 x 1.5	225 {23}	Wet
Main bearing cap bolt	M18 x 2.5	–	Wet. See item (6) in section 5.4.3 for tightening method.
Main bearing cap side bolt	M14 x 2	175 {18}	Wet
Crankshaft pulley bolt	M14 x 1.5	175 {18}	
Front cover bolt	M10 x 1.5	29 {3}	
Balance weight mounting bolt	M16 x 1.5	–	Wet. See item (18) in section 5.4.2 for tightening method.
Torsional damper mounting bolt	M12 x 1.75	98 {10}	

4. SPECIAL TOOLS

Unit: mm

Tool name	Shape
Compression Pressure Gauge Adapter MH061461 Measuring compression pressure	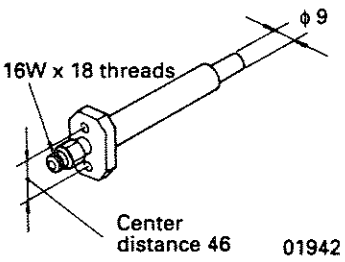
Socket Wrench ME067973 Removing and installing connecting rod cap, flywheel, and cylinder head bolts	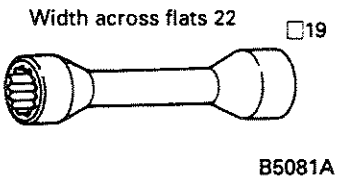
Valve Lifter MH061668 Removing and installing valve cotters Valve Lifter Stud MH061678 Removing and installing valve cotters	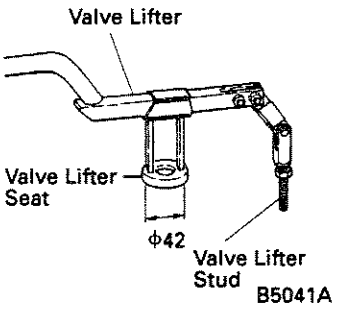
Nozzle Tube Remover MH061232 Removing nozzle tubes	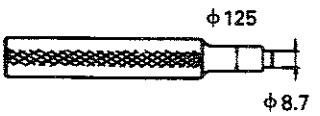
Rocker Bushing Puller MH061236 Replacing rocker bushings	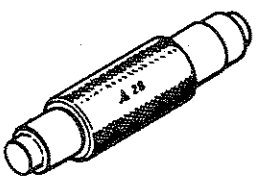
Valve Guide Puller 30091-08100 Replacing valve guides	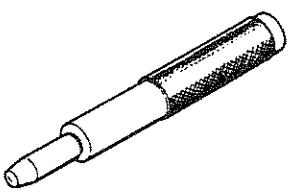

Unit: mm

Tool name	Shape
Valve Lapper 30091-07500 Valve lapping	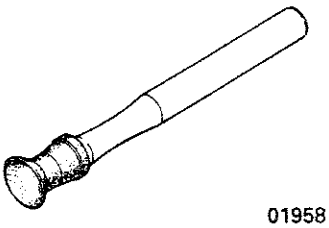
Caulking Tool Body MH061360 Installing and caulking valve seat inserts Caulking Ring (Inlet) MH061680 Installing and caulking valve seat inserts Caulking Ring (Exhaust) MH061681 Installing and caulking valve seat inserts	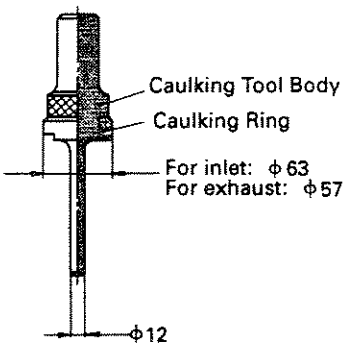
Nozzle Tube Installer Flange MH061416 Nozzle tube installation Nozzle Tube Stamp MH061229 Nozzle tube installation Nozzle Tube Installer Bolt MH061231 Nozzle tube installation	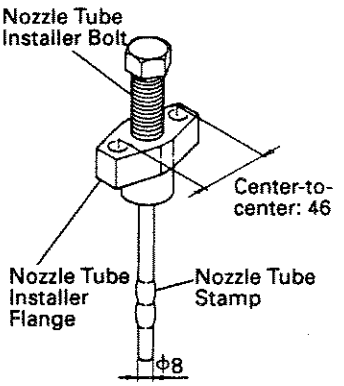
Valve Stem Seal Installer ME067431 Valve stem seal installation	

Unit: mm

Tool name	Shape
Socket Wrench MH063365 Attaching main bearing caps	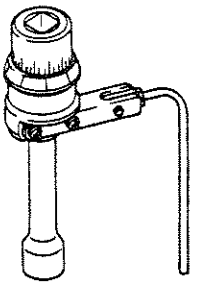 13204
Gear Puller MH061061 Removing gears	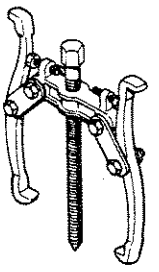 Maximum pulling outside dia. 200 B5071A
Idler Gear Bushing Puller MH061228 Replacing idler gear bushings	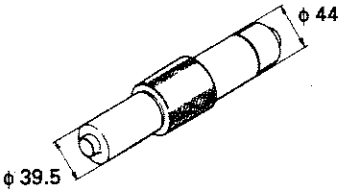 03532
Oil Seal Slinger Installer MH061652 Installing rear oil seal slinger	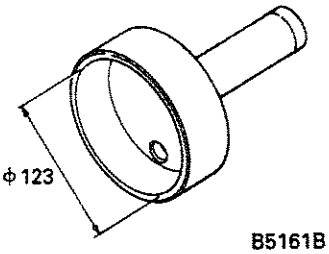 B5161B

Unit: mm

Tool name	Shape
Piston Ring Tool 31191-02900 Removing and fitting piston rings	For ϕ 102 to ϕ 178 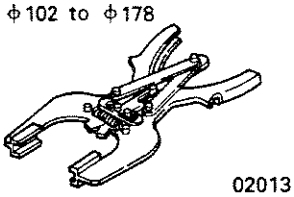 02013
Socket Wrench 31191-13500 Removing and installing main bearing cap bolts	Width across flats 24 B5061A
Cylinder Liner Extractor MH061490 Plate MH061494 (MH061490 component part) Removing cylinder liners	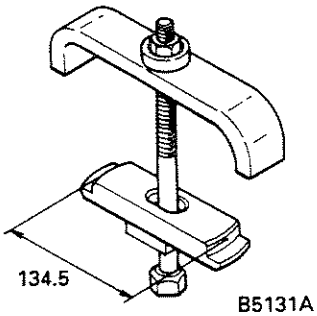 B5131A
Camshaft Bushing Extractor Bar MH062118 Removing camshaft bushings Nos. 1 to 4	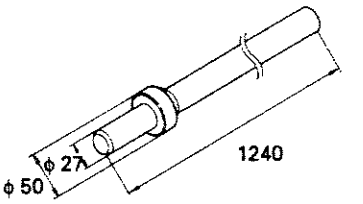 B4867A
Camshaft Bushing Extractor Guide MH062119 Removing camshaft bushings Nos. 1 to 4	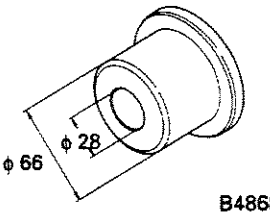 B4868A

Unit: mm

Tool name	Shape
Camshaft Bushing Extractor Adapter MH062121 MH062122 MH062123 Removing camshaft bushings Nos. 1 to 4	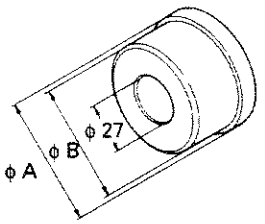 B4869A
Camshaft Bushing Extractor MH062124 Removing camshaft bushing No. 5	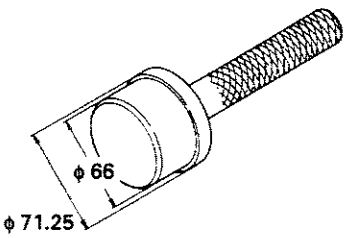 B4870A
Camshaft Bushing Installer Bar MH062312 Installing camshaft bushings Nos. 2 to 4	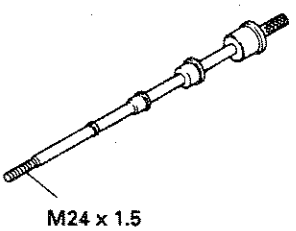 B4871B
Camshaft Bushing Installer Guide MH062311 Installing camshaft bushings Nos. 2 to 4	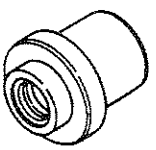 B4872A

Part No.	ϕ A	ϕ B	Applicable bushing
MH062121	70	65.25	No.1, 2
MH062122	70.25	65.5	No.3
MH062123	70.75	65.7	No.4

Unit: mm

Tool name	Shape
Camshaft Bushing Installer Adapter MH062314 MH062315 MH062137 Installing camshaft bushings Nos. 2 to 4	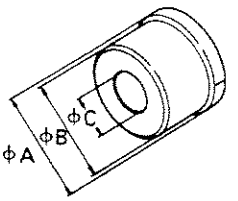 B4873A
Camshaft Bushing Installer Nut MH062130 Installing camshaft bushings Nos. 2 to 4	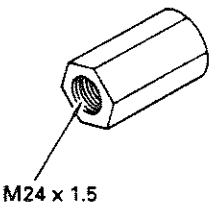 B4874A
Camshaft Bushing Installer MH062313 MH062316 Installing camshaft bushings Nos. 1 and 5	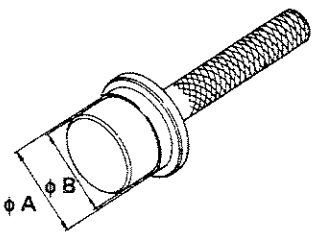 B4875B
Cylinder Liner Installer MH061759 Installing cylinder liners	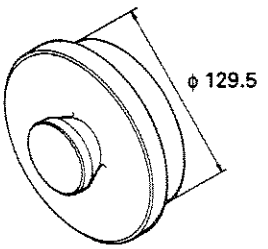 B5141A

Part No.	ϕ A	ϕ B	ϕ C	Applicable bushing
MH062314	71.5	65.25	27	No.2
MH062315	71.75	65.5	43	No.3
MH062137	72	65.75	59	No.4

Part No.	ϕ A	ϕ B	Applicable bushing
MH062313	71.25	65.25	No.1
MH062316	72.25	66	No.5

Unit: mm

Tool name	Shape
Connecting Rod Bushing Puller Kit MH061370 Replacing connecting rod bushings	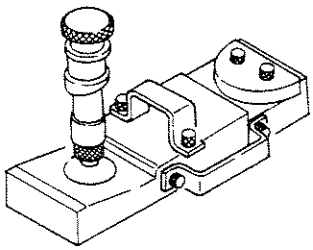 B5151A
Oil Seal Slinger Installer MH061818 Installing front oil seal slinger	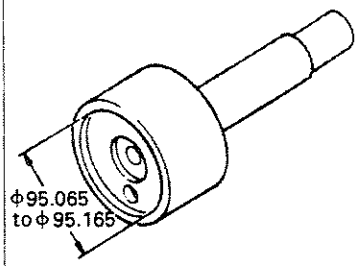 B0585A

Unit: mm

Tool name	Shape
Piston Guide Clamp MH061667 Installing pistons Piston Guide Lever MH061658 Installing pistons	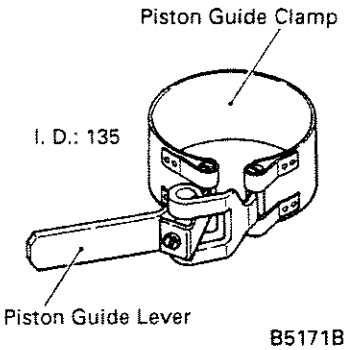 B5171B
Thickness Gauge MH061359 Measuring valve clearances	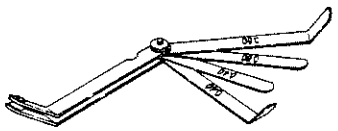 B5011A

5. SERVICE PROCEDURES

5.1 Measuring Compression Pressure

Compression pressure should be measured prior to disassembly of the engine. Take measurements regularly and keep track of changes. During the engine's run-in period or after parts have been replaced, the compression pressure will increase slightly as the piston rings and valve seats fit snugly in position. The pressure will then come down as parts wear.

Measurement Procedure

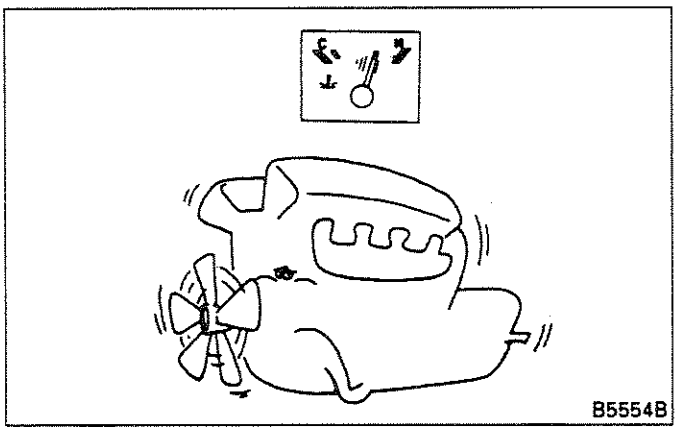

(1) Warm up the engine until the coolant temperature reaches 75 to 85°C, then turn off the engine.

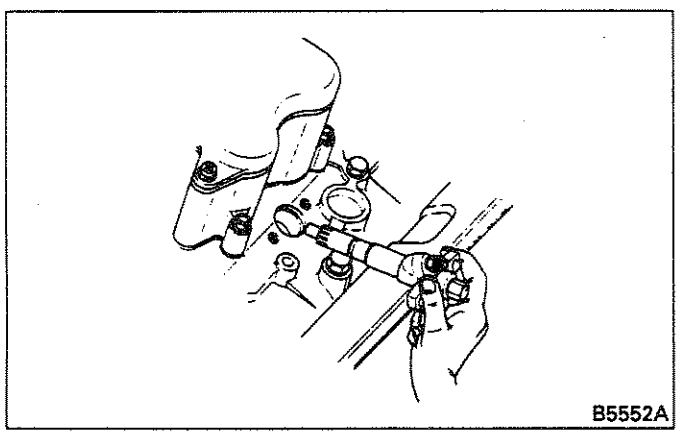

(2) Remove all injection nozzles from the cylinder head.

NOTE:

Cover the mounting holes and injection pipes to prevent the entry of dust and dirt.

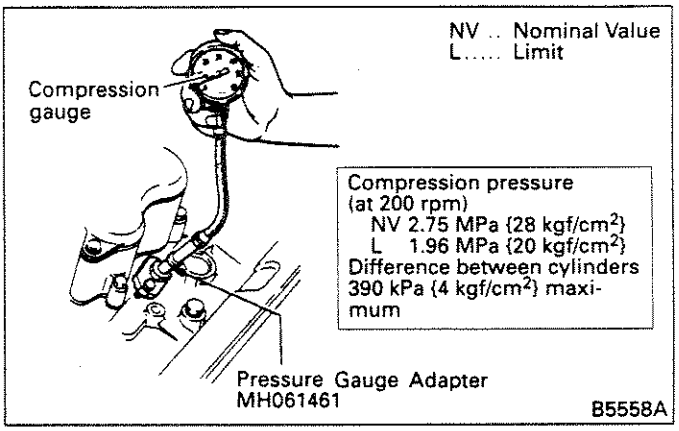

(3) Mount the Compression Pressure Gauge Adapter (special tool) onto an injection nozzle hole together with a gasket. Connect the compression pressure gauge.

(4) To prevent fuel from being pumped into the cylinder by the injection pump, pull the injection pump's stop lever fully in the "stop" direction.

(5) Turn the engine over with the starter and measure the compression pressure at 200 rpm.

NOTE:

1. **Be sure to measure the engine speed while taking compression pressure measurements since changes in engine speed cause changes in compression pressure.**
2. **Since wear and other factors vary from one cylinder to another, measure the compression pressure in every cylinder.**

5.2 Cylinder Head and Valve Mechanism

5.2.1 Disassembly

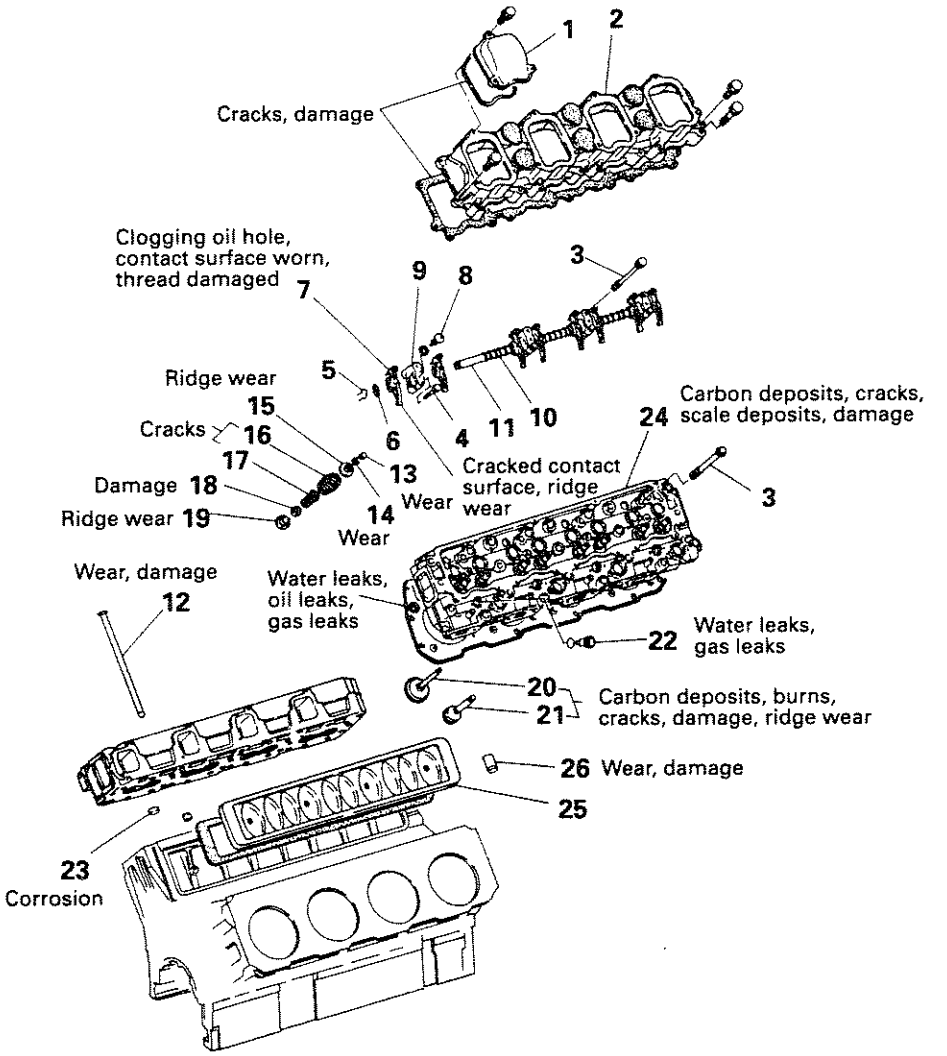

Disassembly sequence

1 Rocker cover
2 Rocker case
③ Cylinder head bolt
④ Rocker shaft bracket bolt
5 Snap ring
6 Washer
7 Rocker
8 Set screw
9 Rocker shaft bracket
10 Rocker shaft spring
11 Rocker shaft
12 Push rod
13 Valve cap
⑭ Valve cotter
15 Upper retainer
16 Outer valve spring
17 Inner valve spring
*1 18 Valve stem seal
19 Lower retainer
20 Inlet valve
21 Exhaust valve
*2 ㉒ Nozzle tube
*2 23 Water director
24 Cylinder head
25 Crankcase side cover
26 Tappet

For parts with an encircled number, refer to Disassembly Procedure that follows.
Parts marked with *1 should not be reused, but replaced.
It must be replaced when the valve only is removed.
Parts marked with *2 should not be removed unless defects are evident.

C1529B

Disassembly Procedure

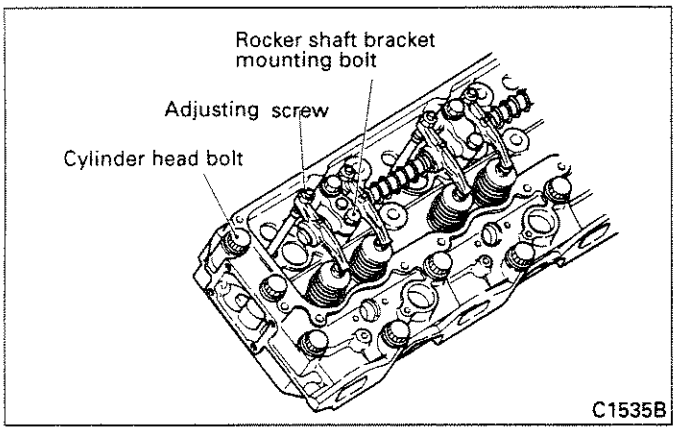

(1) Before removing the bolts, loosen the adjusting screw on every rocker that is being pushed up by its push rod.

(2) Removing cylinder head assembly

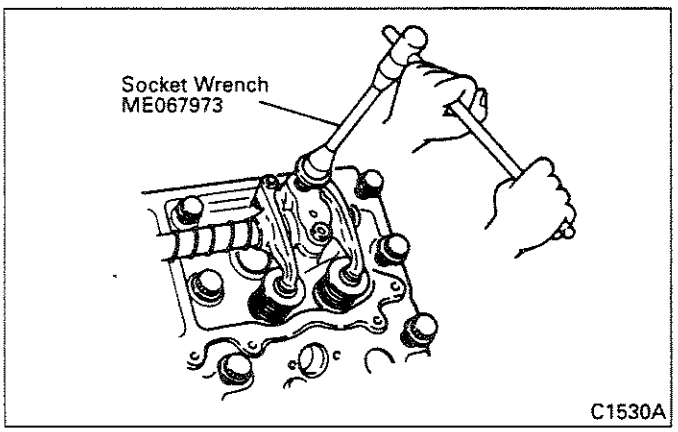

Loosen the cylinder head bolts in the opposite order to their tightening sequence, beginning with the M14 bolts. Use Socket Wrench (special tool) to remove the M16 cylinder head bolts and rocker bracket bolts.

NOTE:

1. **Remove the injection nozzles before taking off the cylinder head (refer to Group 13, Fuel and Engine Control). If the cylinder head is placed on a work surface with the nozzles still mounted, the ends of the nozzles projecting from the bottom of the cylinder head will be damaged.**
2. **When removing the cylinder head gasket, take care not to scratch or dent the cylinder head and crankcase gasket surfaces.**

(3) Removing valve cotters

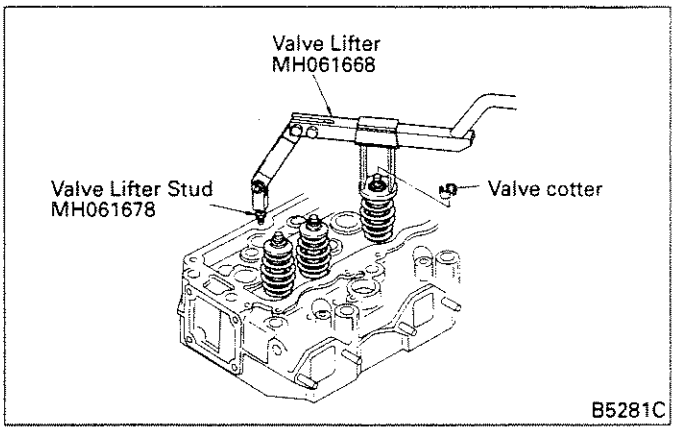

To remove the valve cotters, use the Valve Lifter and Valve Lifter Stud (special tools) to evenly compress each spring.

(4) Removing nozzle tubes

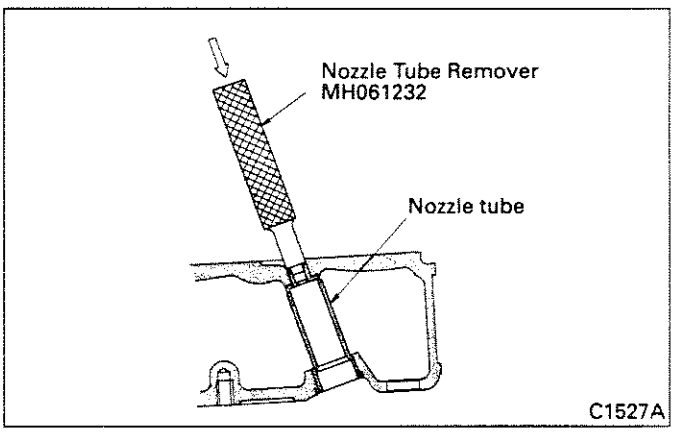

NOTE:

Whenever a nozzle tube is removed, it must be replaced with a new one.

5.2.2 Inspection

BD .. Basic Diameter
NV .. Nominal Value
L..... Limit

Item		NV	L
Free length	Outer valve spring	89.38	85
	Inner valve spring	65.04	62
Installed load/length	Outer valve spring	470 N {48.0 kgf}/58.35	400 N {41.0 kgf}/58.35
	Inner valve spring	190 N {19.5 kgf}/50.35	160 N {16.6 kgf}/50.35
Inner valve spring squareness		–	2.5

Item		NV	L
Valve seat insert seat width	Inlet valve	2.69 to 2.97	3.5
	Exhaust valve		
Cylinder head bottom surface distortion		0.07 or less	0.2
Cylinder head height (from top to bottom surface)		114.9 to 115.1	114.6

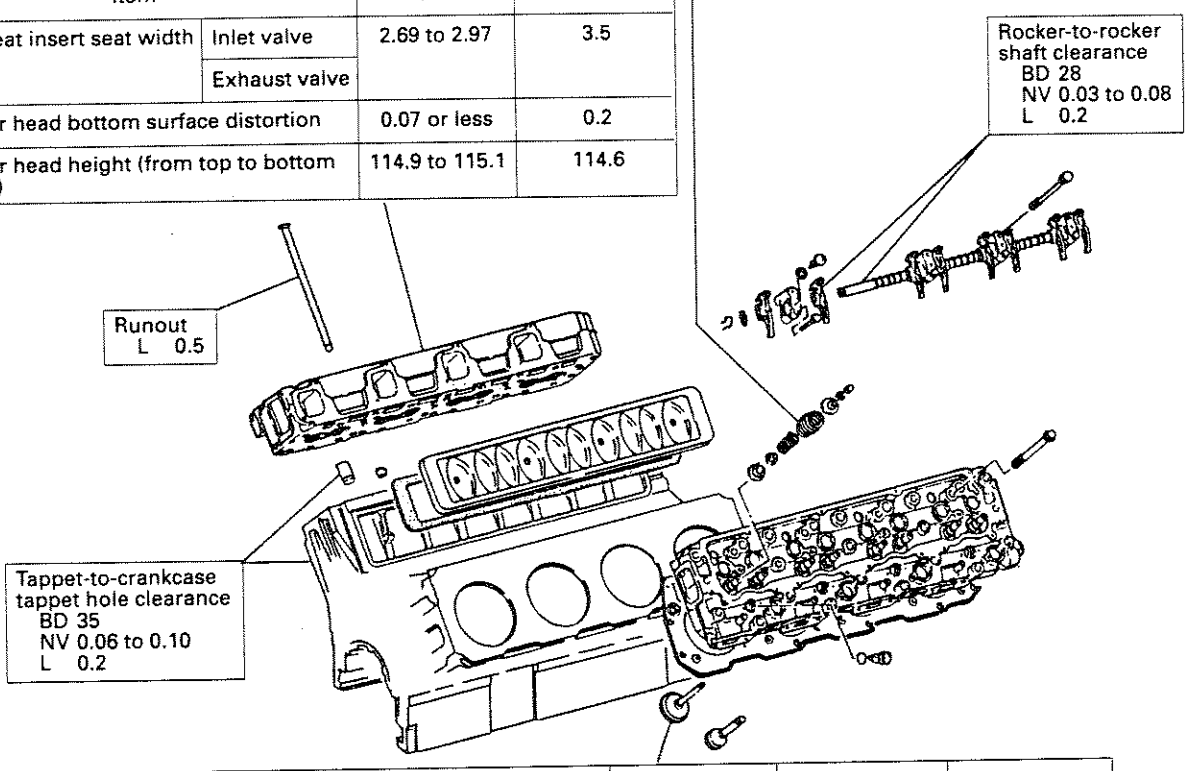

Item		BD	NV	L
Valve stem O.D.	Inlet valve	–	11.95 to 11.96	11.85
	Exhaust valve	–	11.91 to 11.93	
Valve guide-to-valve stem clearance	Inlet valve	12	0.05 to 0.09	0.2
	Exhaust valve	12	0.09 to 0.12	
Valve sinkage from cylinder head bottom surface	Inlet valve	–	0.25 to 0.75	1.0
	Exhaust valve	–	–0.05 to 0.45	0.7
Valve margin	Inlet valve	–	2.2	1.7
	Exhaust valve	–	2.5	2.0
Valve seat angle		–	45°	–

C1529E

Inspection Procedure

(1) Rocker bushing-to-rocker shaft clearance

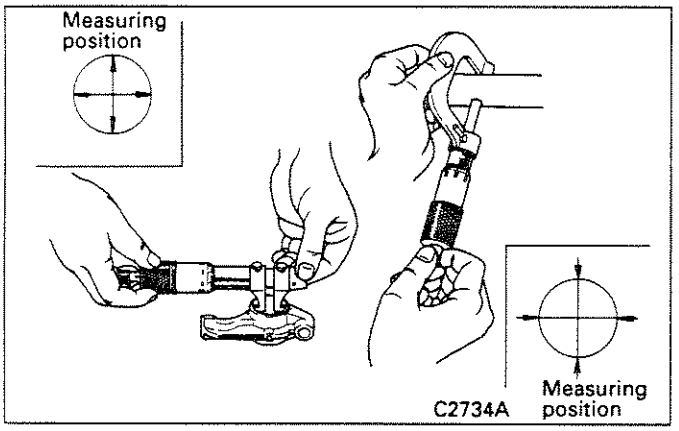

If the clearance exceeds the prescribed limit, replace the rocker bushing.

(2) Replacing rocker bushing

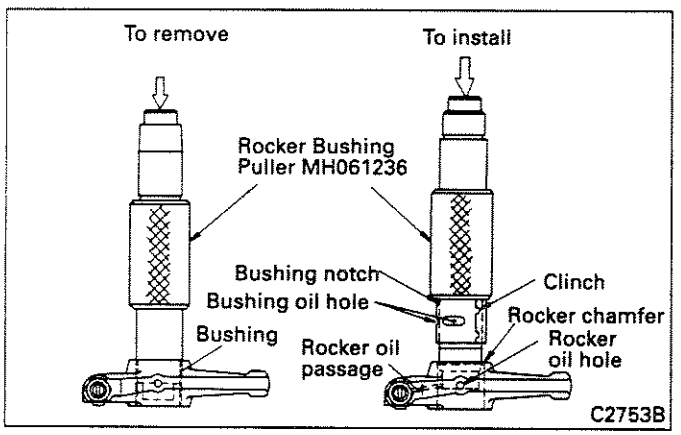

To install a bushing, proceed as follows:
Face the chamfered side of the rocker up and position the notch in the bushing on the same side as the oil passage in the rocker. Using the Rocker Bushing Puller (special tool), press-fit the bushing into the rocker, making sure that bushing oil hole, rocker oil hole, and rocker oil passage are aligned correctly.

(3) Valve spring inspection

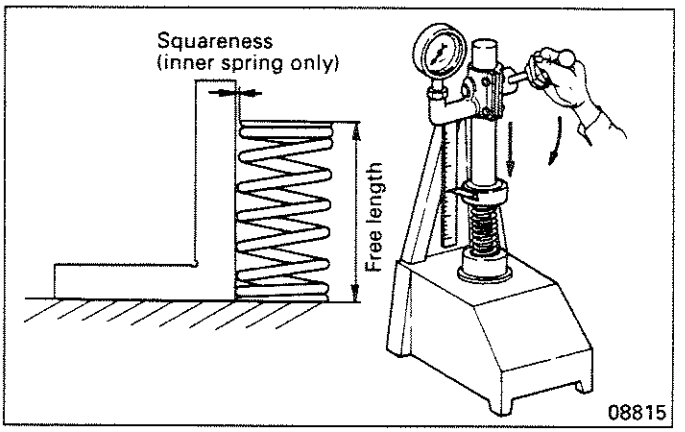

Measure the free length and installed load of each spring and replace the spring if these are below the specified limits. With inner springs, check also for squareness.

(4) Tappet-to-crankcase tappet hole clearance

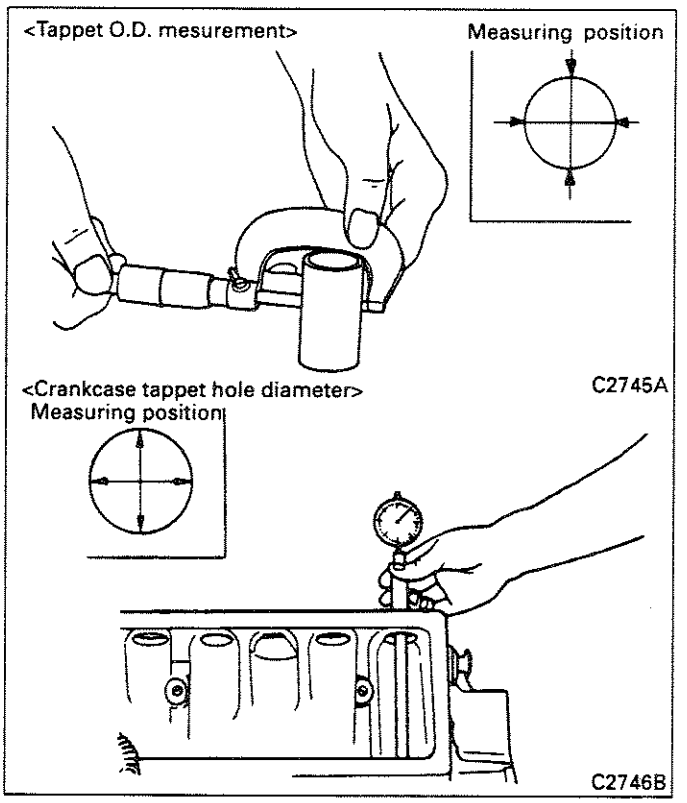

If the clearance exceeds the specified limit, replace the tappet.

(5) Push rod runout

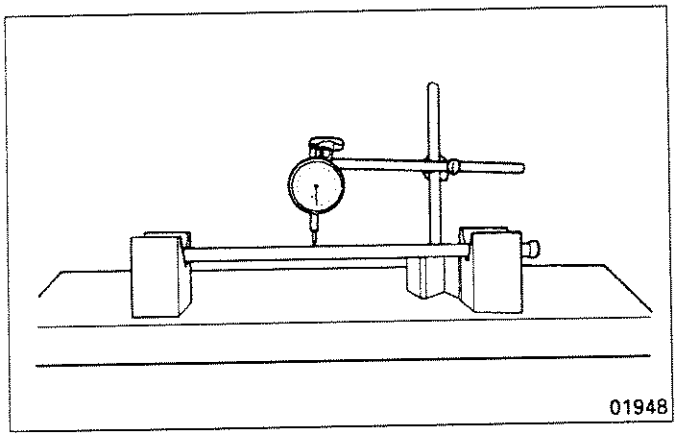

Check for runout and replace the push rod if the reading on the dial indicator exceeds the specified limit.

(6) Distortion of cylinder head bottom surface

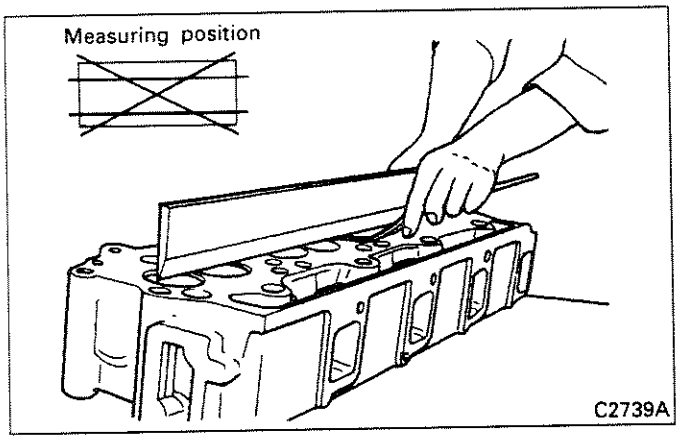

If distortion exceeds the specified limit, correct it using a surface grinder.

NOTE:
Replace the cylinder head if grinding causes the height from its top surface to bottom surface to fall below the specified nominal value.

(7) Valve stem outside diameter

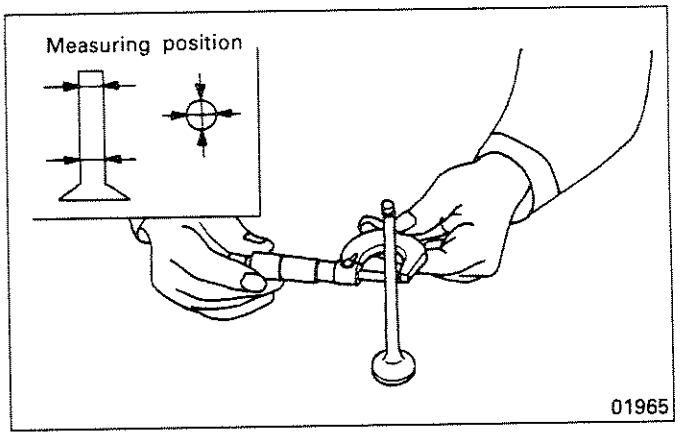

Replace the valve if its outside diameter is below the specified diameter or if it is severely worn.

(8) Valve stem-to-valve guide clearance

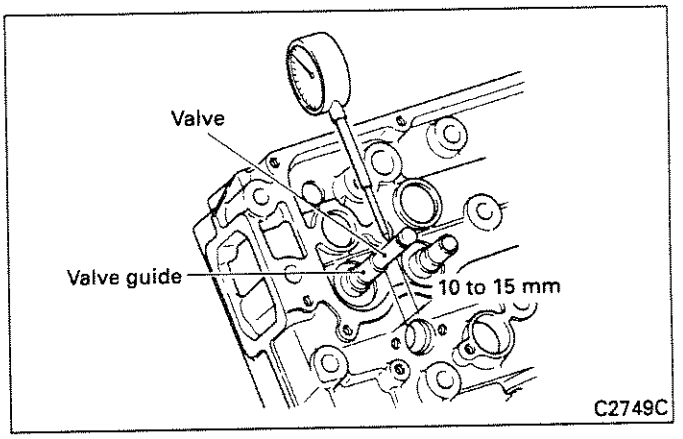

Insert the valve into the valve guide and measure the play at the specified distance from the valve guide's top (as illustrated). If the measured amount exceeds the specified limit, replace the valve guide.

(9) Valve guide replacement

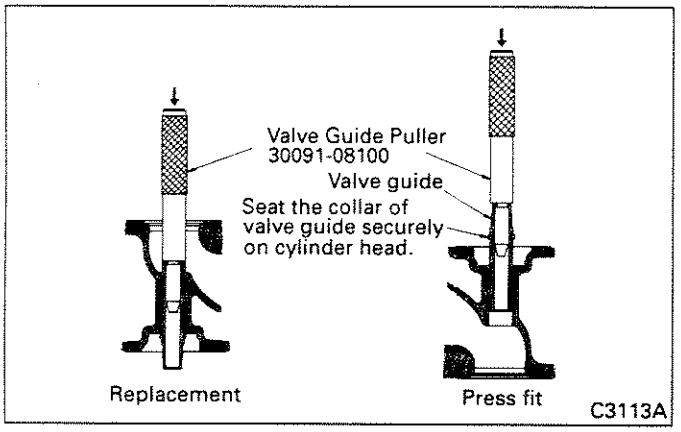

To install a valve guide, insert it with the Valve Guide Puller (special tool) until its collar sits securely on the cylinder head.

(10) Contact between valve and valve seat insert

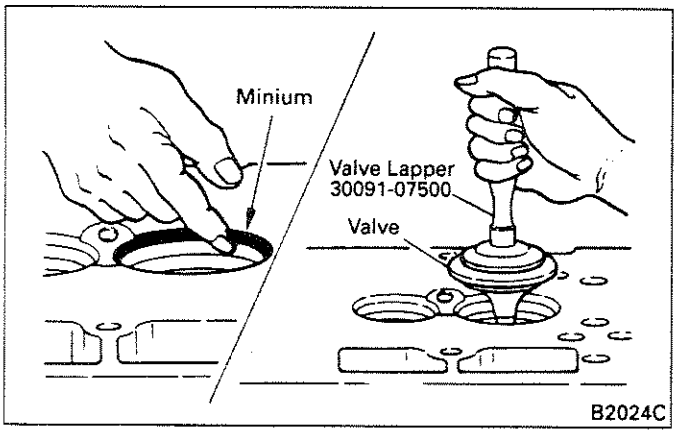

(a) Apply an even coat of minium to the valve seat insert surface that comes into contact with the valve.
(b) Using the Valve Lapper (special tool), hit the valve against the valve seat insert once.

NOTE:

1. **Do not turn the valve when hitting it against the valve seat insert.**
2. **The contact pattern should be checked whenever a valve guide is inspected or replaced.**

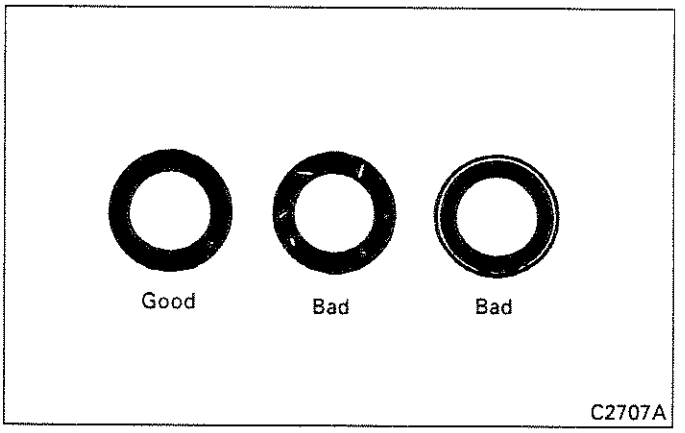

If the minion indicates a poor contact pattern, rectify it as follows:

Minor defect: Lapping
Serious defect: Rectify valve and valve seat

(11) Valve face rectification

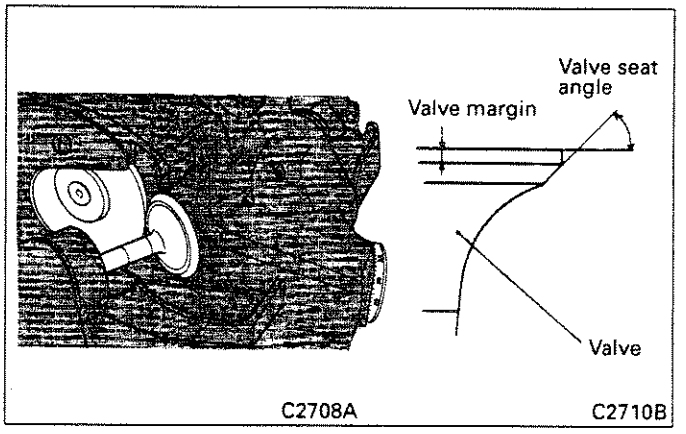

With a valve refacer, grind the valve face to achieve the specified valve seat angle.

NOTE:

1. **Keep grinding to a minimum.**
2. **If the valve margin is below the prescribed level after grinding, replace the valve.**
3. **After grinding, be sure to lap the valve and valve seat insert. See item (14) for details.**

(12) Valve seat insert rectification

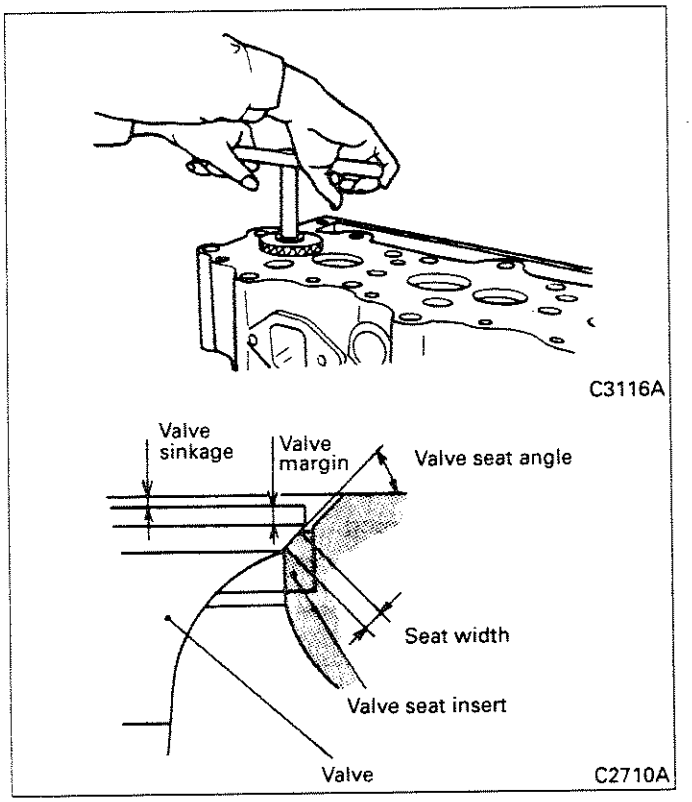

(a) With a valve seat cutter, cut the insert to achieve the specified valve seat angle and seat width. Use a 15° or 75° cutter first, followed by a 45° cutter.

NOTE:

1. **Keep cutting to a minimum.**
2. **If the valve sinkage exceeds the prescribed limit after cutting, replace the valve seat insert.**

(b) After cutting, put some sandpaper of around #400 between the cutter and valve seat insert and grind the valve seat insert lightly.

NOTE:

After rectification, be sure to lap the valve and valve seat insert. Refer to item (14) for details.

(13) Replacing valve seat insert

Valve seat inserts are installed by expansion fitting and should therefore be replaced as follows:

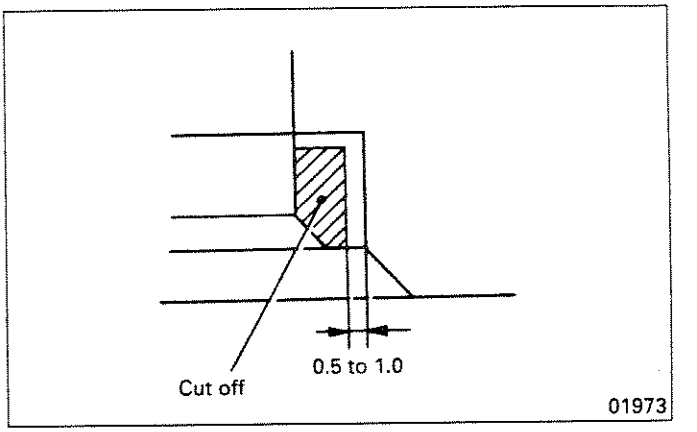

(a) Grind the inside surface of the valve seat insert to reduce its thickness, and remove the valve seat insert at room temperature.

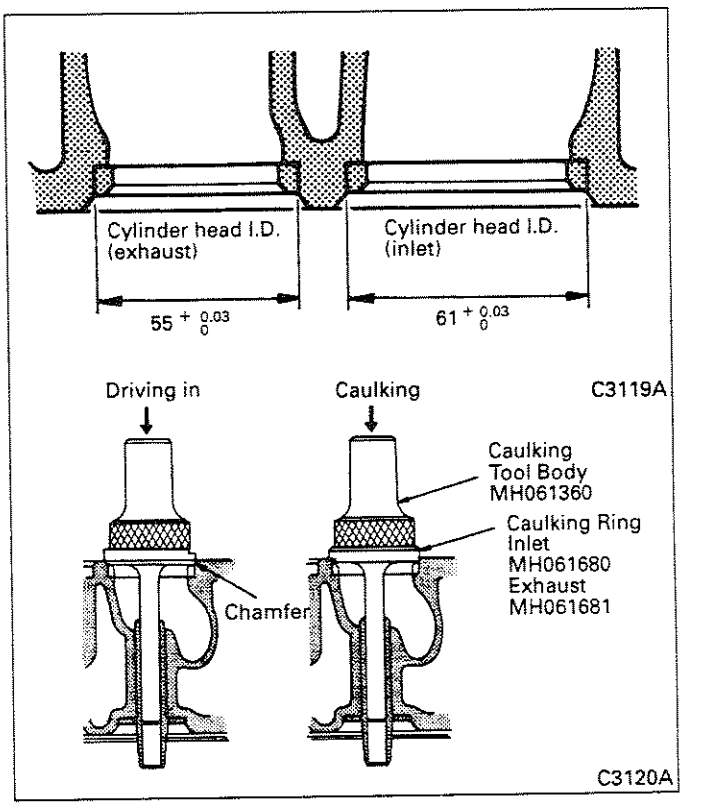

(b) Check that there is sufficient interference between the cylinder head and valve seat insert.

(c) Cool the valve seat insert in liquid nitrogen and heat the cylinder head.

(d) Install the valve seat insert using the Caulking Tool Body and Caulking Ring (special tools), and caulk the periphery of the valve seat insert.

NOTE:
When installing the valve seat insert, ensure that the chamfered side of the Caulking Ring faces the valve seat insert.

(e) Reface the valve seat insert to achieve the prescribed seat width and valve sinkage. See item (12) for details.

(14) Lapping valves and valve seat inserts

Contact between the valve and valve seat insert must be even over the entire contact area. The valve and valve seat insert must be lapped whenever the valve or valve seat insert has been rectified or replaced.

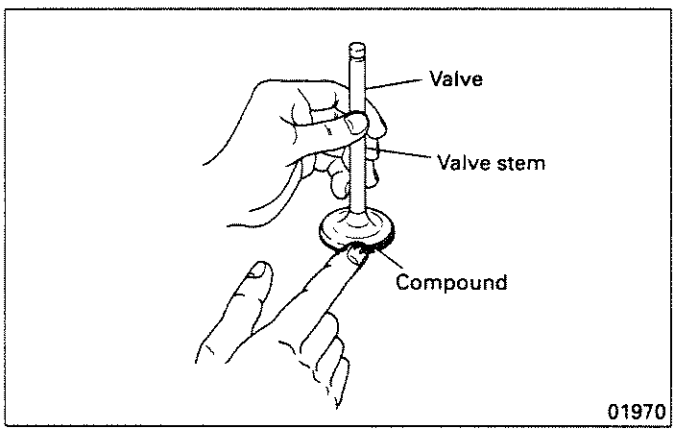

(a) Apply a thin, even coat of lapping compound to the seating surface of the valve.

NOTE:
1. **Ensure that no compound adheres to the valve stem.**
2. **Start with intermediate size compound (120 to 150 mesh), and finish with fine compound (200 mesh or more).**
3. **The addition of a small amount of engine oil makes lapping compound easier to apply.**

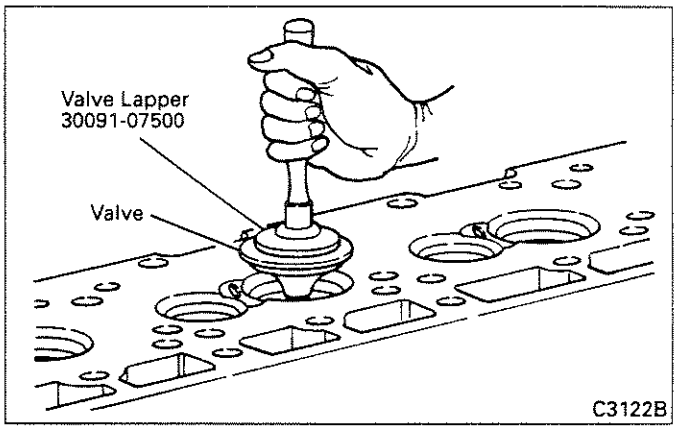

(b) Using the Valve Lapper (special tool), lightly strike the valve against the valve seat insert while turning it little by little.

(c) Wash away the compound with gas oil or a similar fluid.

(d) Apply engine oil to the contact surfaces and rub it in.

(e) Check that the valve is properly seated. Refer to item (10) for details.

5.2.3 Reassembly

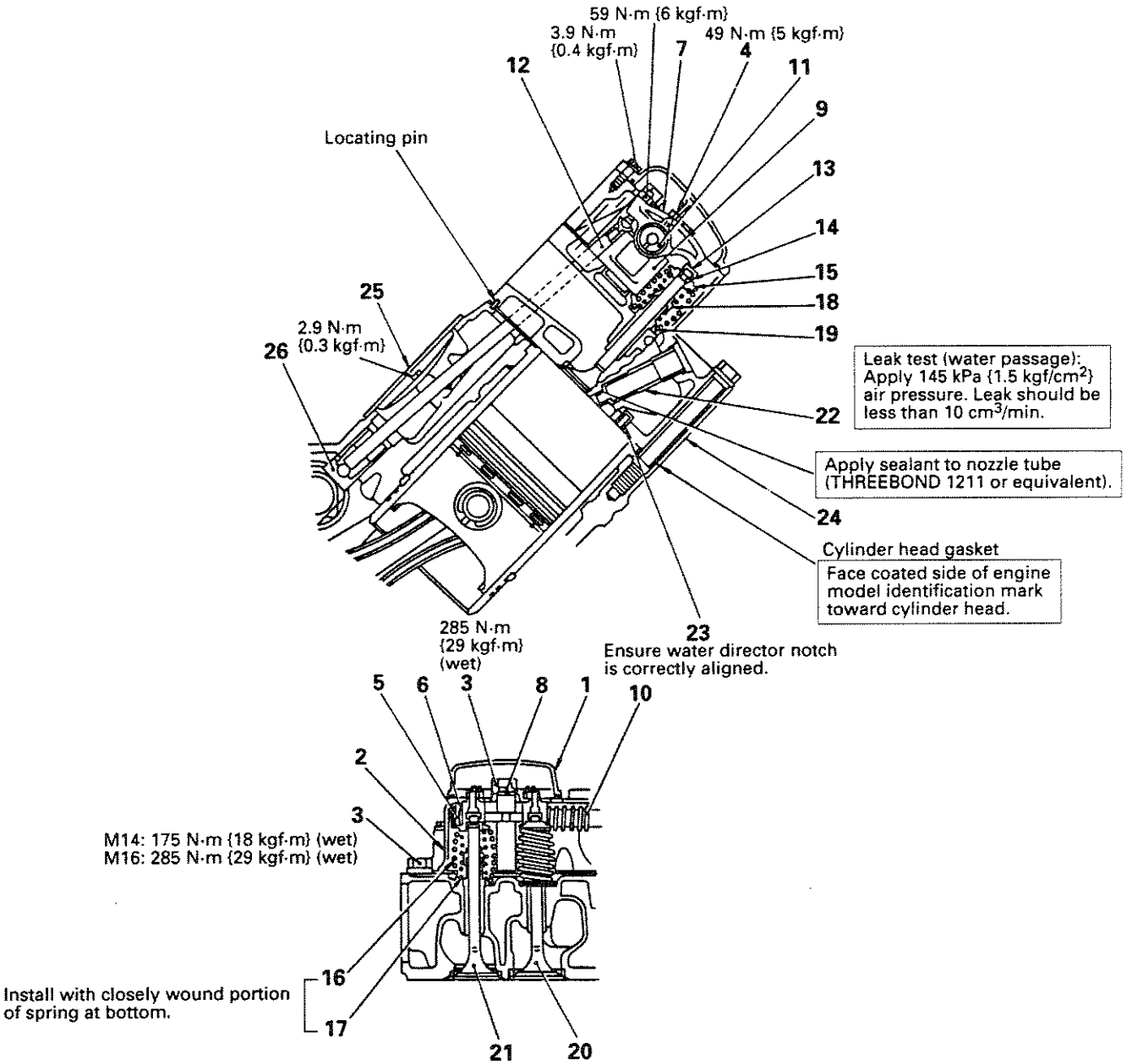

Assembly sequence

㉔→㉓→㉒→21→20→19→⑱→17→16→
15→⑭→13→12→4→③→2→1
26→25
11→10→⑨→8→⑦→6→5

For parts with an encircled number, refer to Reassembly Procedure that follows.

B1834B

Reassembly Procedure

(1) Water director installation

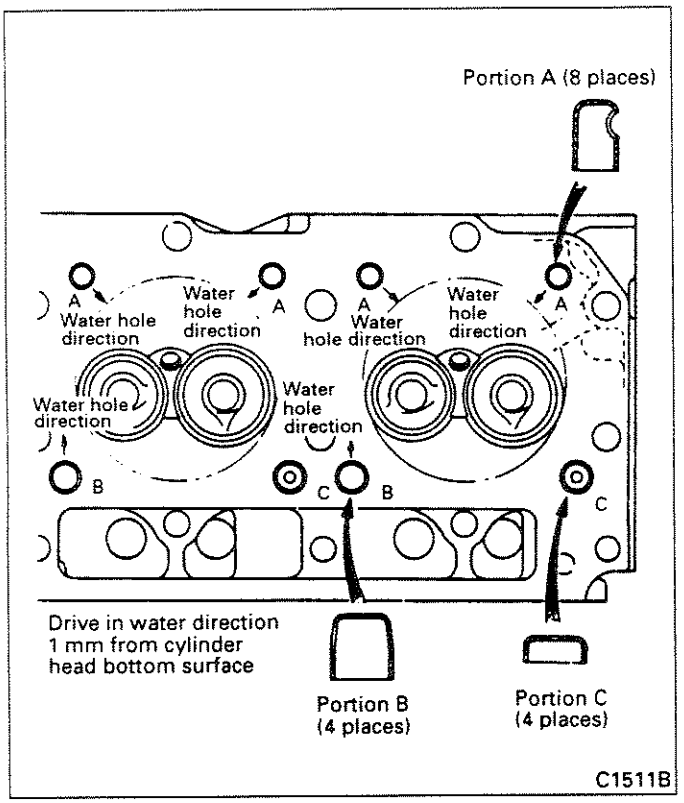

Push the water directors into the cylinder head so that they point in the directions shown in the diagram and are sunk 1 mm below the cylinder head's bottom surface.

(2) Nozzle tube installation

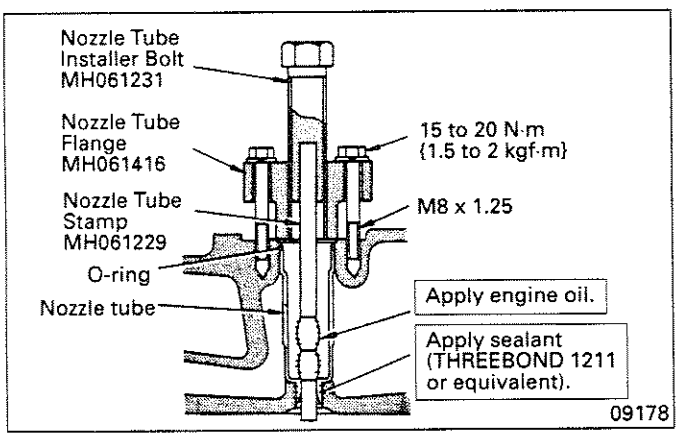

(a) Apply sealant to the nozzle tube and insert it into the cylinder head.

(b) Using the Nozzle Tube Installer Flange (special tool), press the nozzle tube against the cylinder.

(c) Apply engine oil to the Nozzle Tube Stamp (special tool) and insert it into the nozzle tube.

(d) Screw in the Nozzle Tube Installer Bolt (special tool) until the Nozzle Tube Stamp can be pulled out of the bottom of the cylinder head.

(e) After installing the nozzle tube, carry out a leak test to verify water-tightness.

(3) Valve stem seal installation

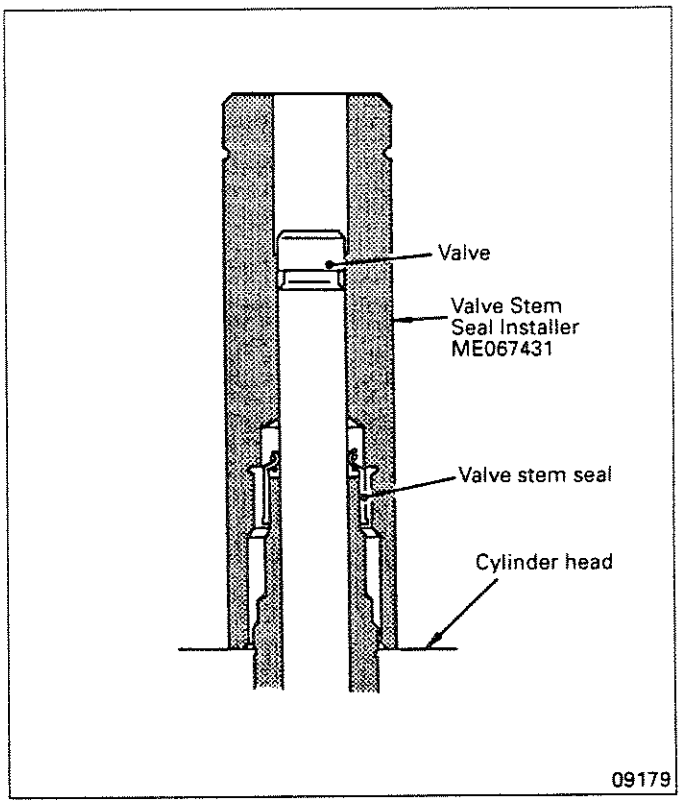

To install a valve stem seal, first apply engine oil to the lip. Then, push in the valve stem seal using the Valve Stem Seal Installer (special tool), striking the tool until it touches the cylinder head.

NOTE:

1. **When installing a valve, apply a small amount of engine oil to its stem.**
2. **After installing a valve stem seal, check that the valve stem seal's spring has not been deformed or damaged.**

(4) Valve cotter installation

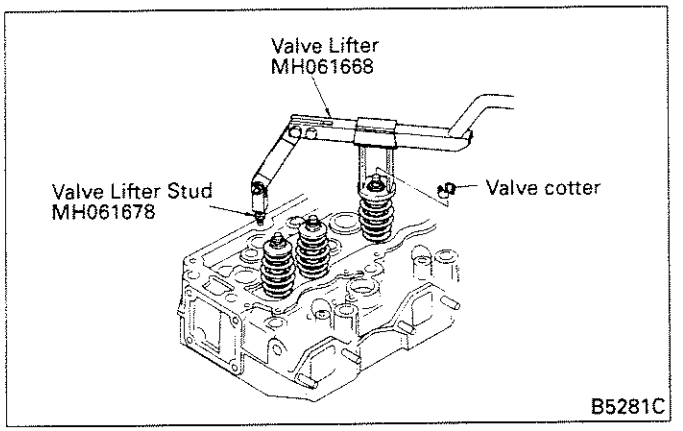

Install the valve cotter while evenly depressing the spring with the Valve Lifter and Valve Lifter Stud (special tools).

NOTE:
Valve springs must be installed with their tightly wound portions toward the cylinder head.

(5) Rocker and rocker shaft installation

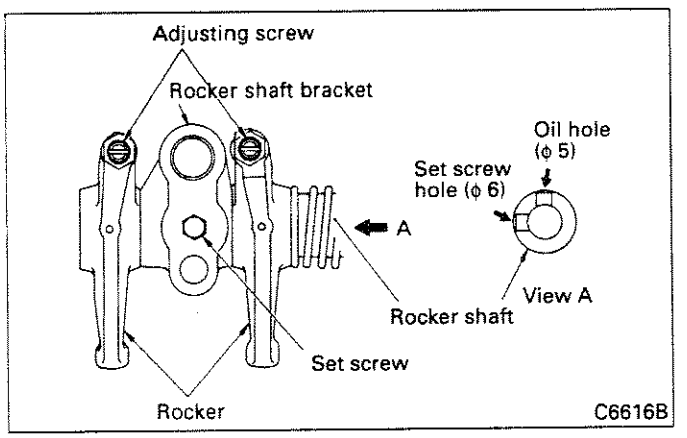

(a) Install the rocker such that the adjusting screws lean toward the rocker shaft bracket.
(b) Align the rocker shaft oil holes at the front and rear shaft bracket ends, then lock the rocker shaft into position with the set screw (front only).

(6) Mounting cylinder head

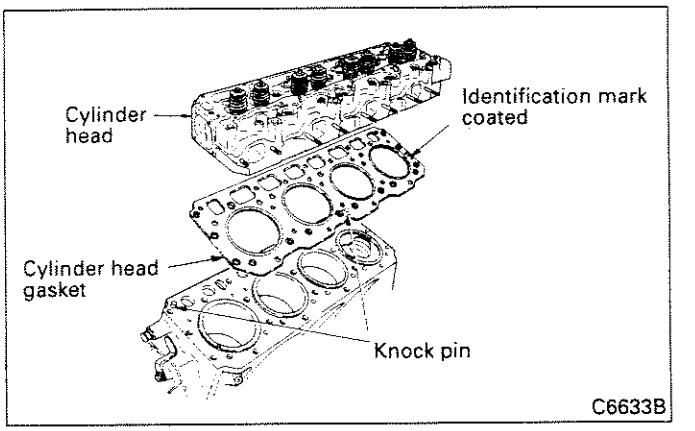

When mounting the cylinder head, align it with the dowel pins in the crankcase.
Fit the cylinder head gasket such that the side with the identification mark is facing upward.

(7) Tightening cylinder head bolts

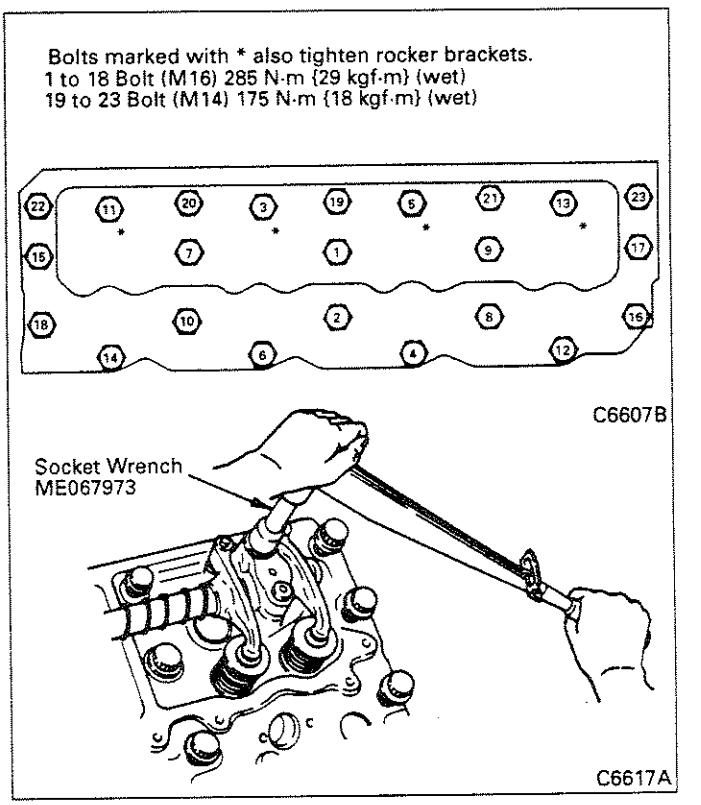

Tighten the cylinder head bolts in the order shown. Tighten the bolts little by little before tightening them to the specified torque.
Use the Socket Wrench (special tool) to tighten the M16 bolts to their specified torque.

5.3 Flywheel, Timing Gear, and Camshaft

5.3.1 Disassembly

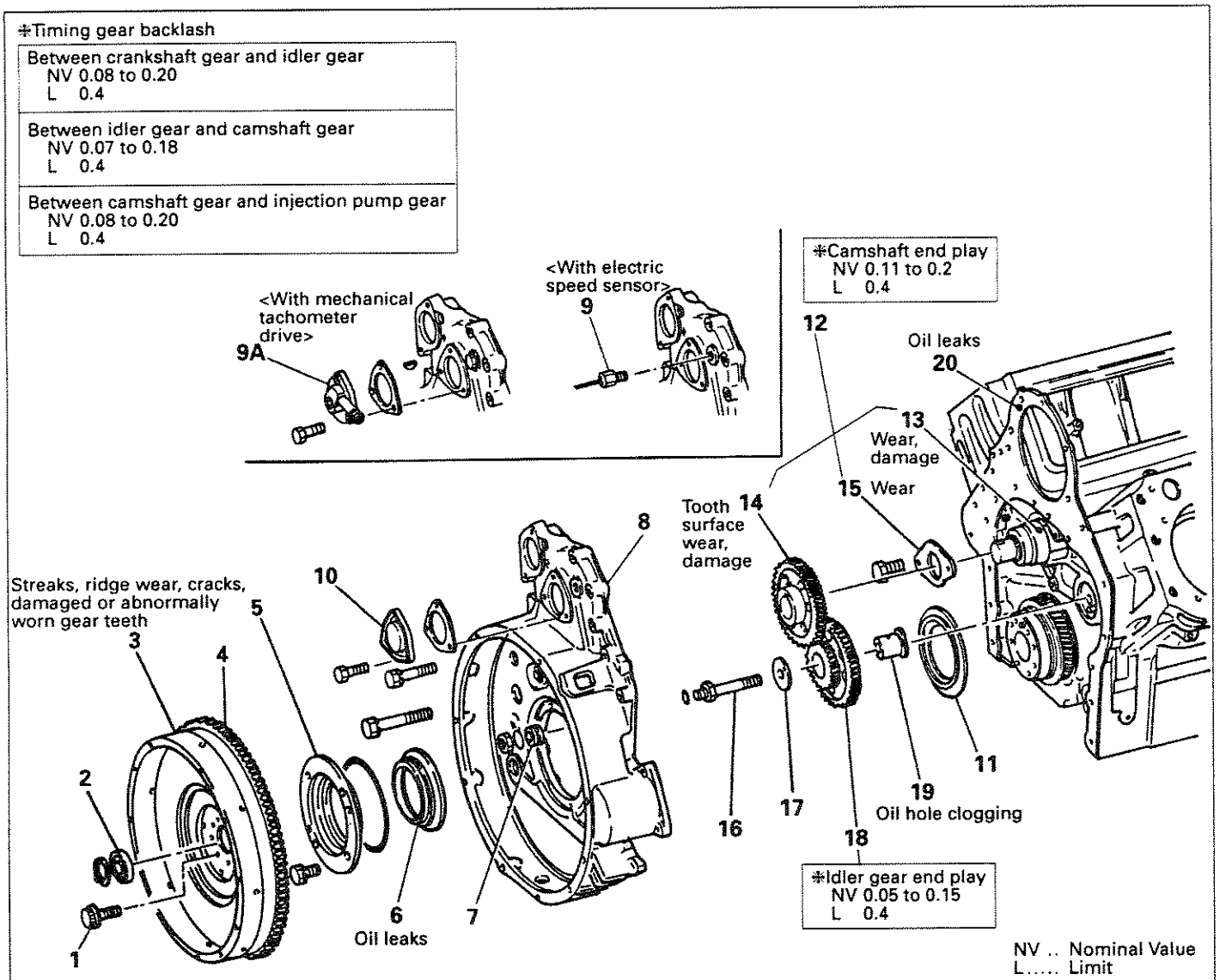

Disassembly sequence

1 Flywheel mounting bolt
*2 Pilot bearing
③ Flywheel
*④ Ring gear
⑤ Oil seal retainer
6 Oil seal
⑦ Collar
8 Flywheel housing
*9 Speed sensor (models with electric speed sensor)
*9A Tachometer drive (models with mechanical tachometer drive)
10 Cover (models with electric speed sensor)
*11 Rear oil seal slinger
⑫ Camshaft assembly
13 Camshaft
14 Camshaft gear
15 Thrust plate
16 Idler shaft bolt
17 Thrust plate
18 Idler gear
19 Idler shaft
*20 Rear plate

For parts with an encircled number, refer to Disassembly Procedure that follows.
Service items marked with ✻ should be checked before disassembly.
Parts marked with * should not be removed unless defects are evident.

B1832J

Disassembly Procedure

(1) Removing flywheel

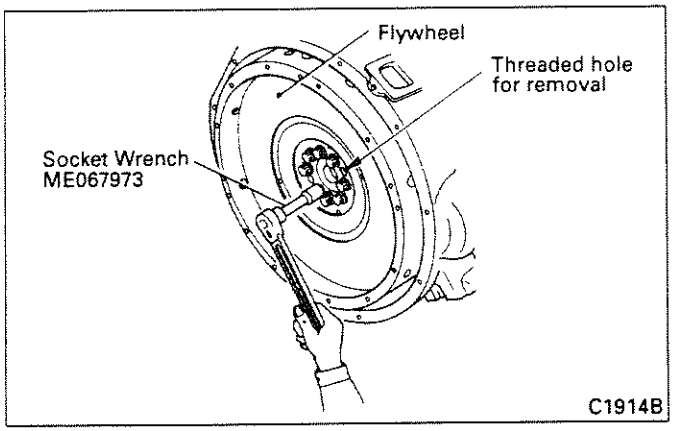

To remove the flywheel, screw the mounting bolts into the removal holes.

(2) Removing ring gear

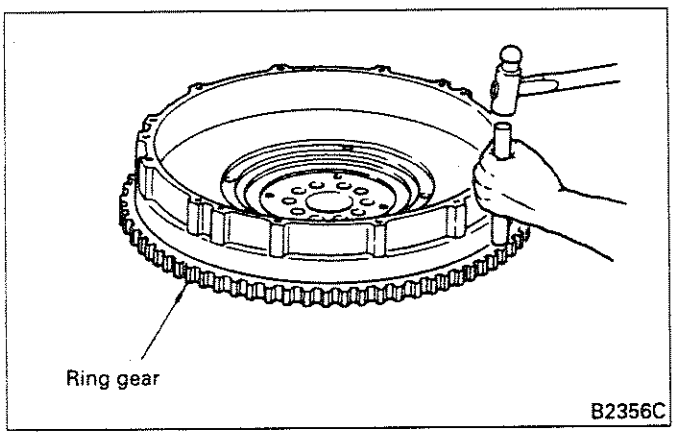

To remove the ring gear, heat it evenly with an acetylene torch or the like, then tap around its entire periphery with a hammer and bar.

(3) Removing collar and oil seal retainer

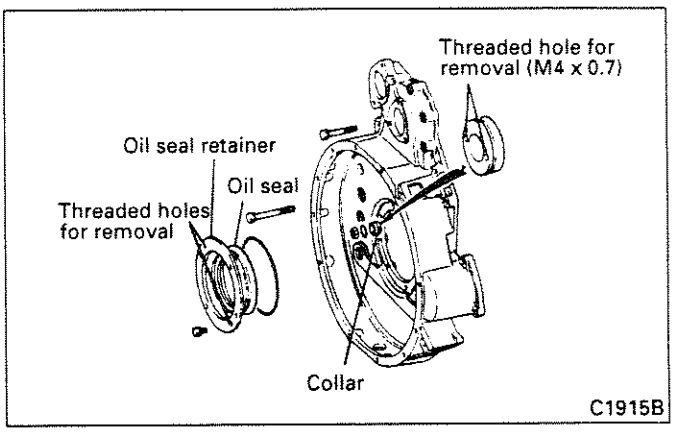

- To remove the collar, screw M4 x 0.7 bolts into the threaded removal holes.
- To remove the oil seal retainer, screw the mounting bolts into the threaded removal holes. Remove the oil seal retainer with the oil seal attached.

(4) Measuring gear backlash

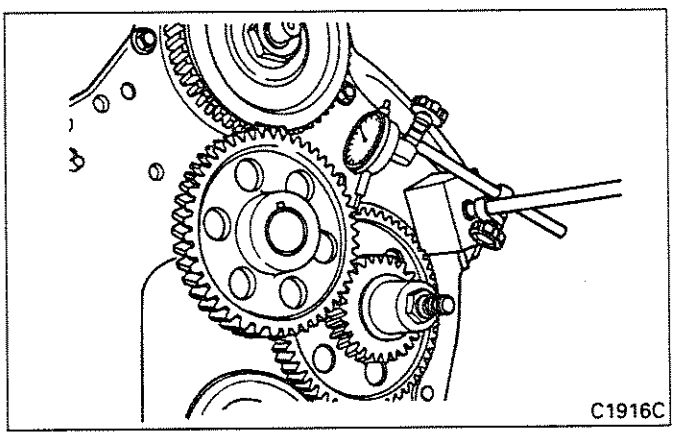

If backlash exceeds the specified limit, inspect the idler gear bushing and gears, and replace parts as required.

NOTE:

1. **Secure the air compressor to the rear plate before measuring the injection pump gear's backlash.**
2. **For any gear pair, measure backlash at more than three points to determine whether it is acceptable.**

(5) Measuring idler gear and camshaft gear end play

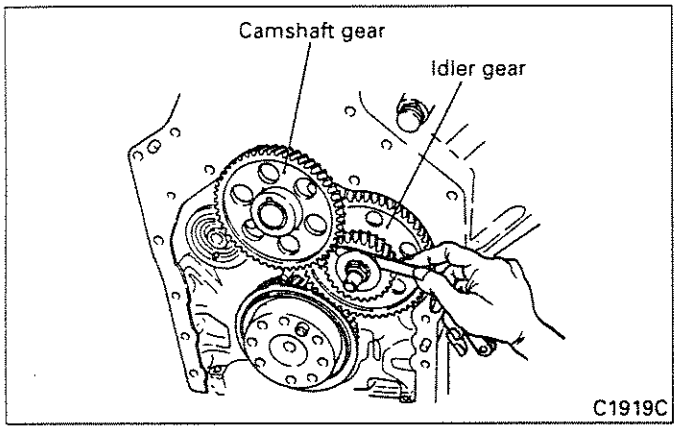

If end play exceeds the specified limit, replace the thrust plate.

(6) Removing camshaft

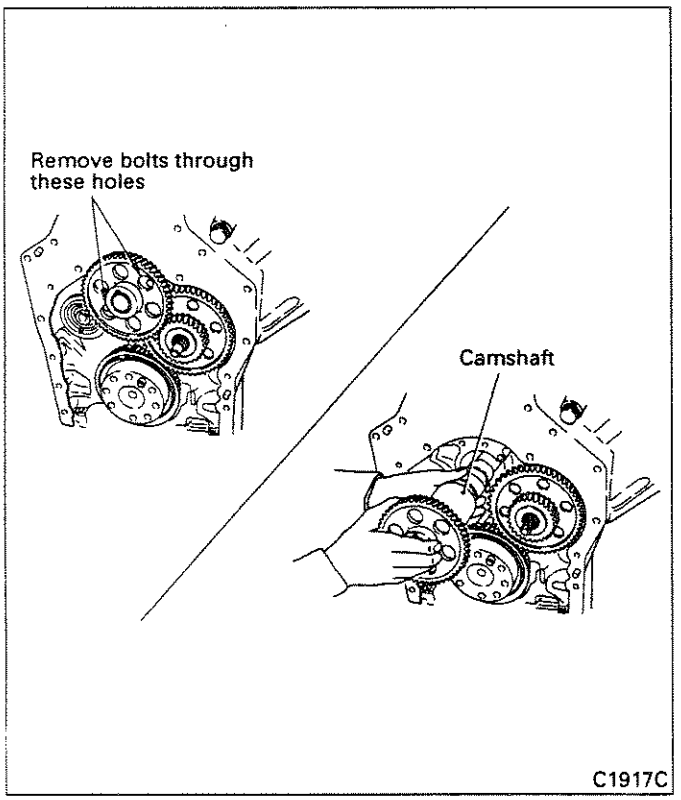

Loosen the thrust plate mounting bolts via the holes in the camshaft gear. Remove the camshaft together with the camshaft gear and thrust plate.

(7) Removing camshaft gear

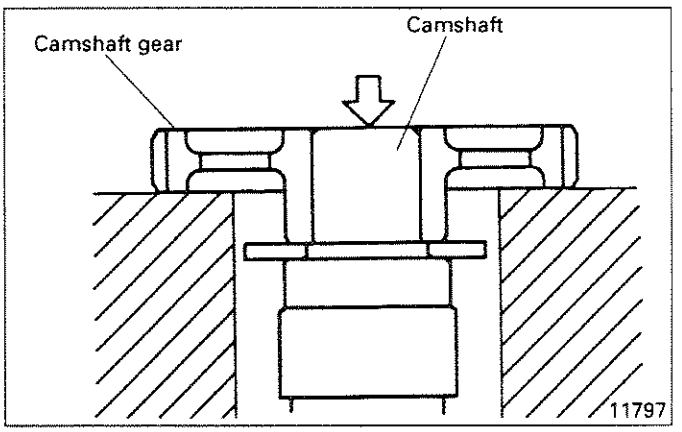

Remove the camshaft first with a press, and then remove the camshaft gear from the shaft.

NOTE:

Never strike the gear with a hammer. Always use a press for removed.

5.3.2 Inspection

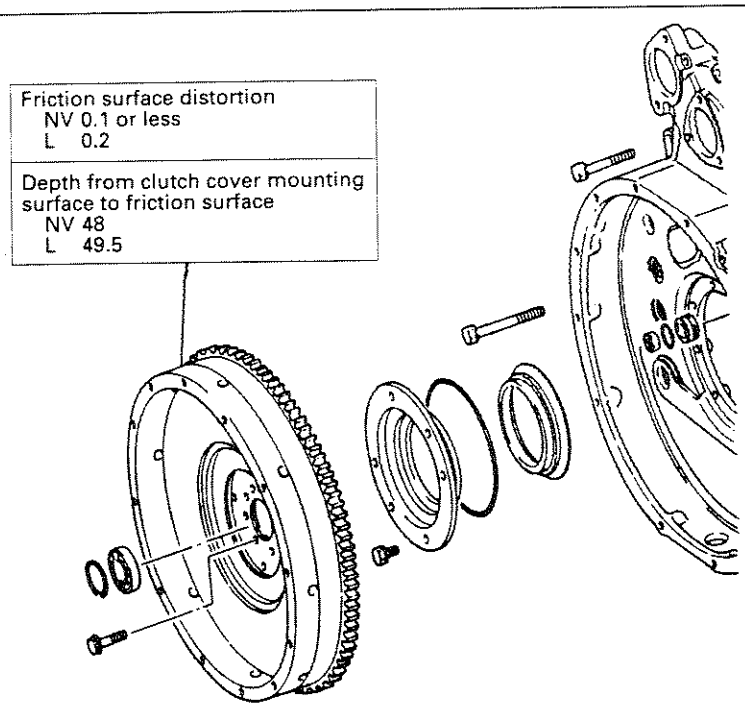

C3504A

Item		BD	NV	L
Cam profile (difference between lobe height and base circle diameter)	Inlet	–	8.86	8.36
	Exhaust	–	8.78	8.36
Camshaft bend		–	0.05 or less	0.08
Camshaft journal-to-camshaft bushing clearance	No.1, 2	65.25	0.07 to 0.10	0.25
	No.3	65.50		
	No.4	65.75		
	No.5	66.00		

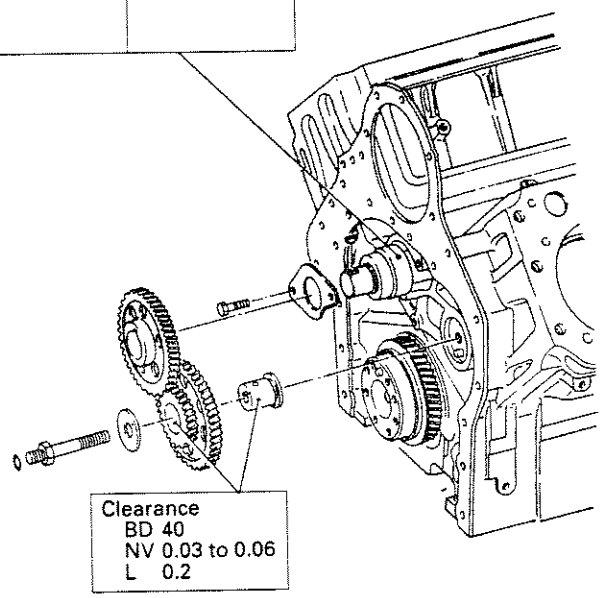

BD .. Basic Diameter
NV .. Nominal Value
L..... Limit

C3804E

Inspection Procedure

(1) Distortion of friction surface

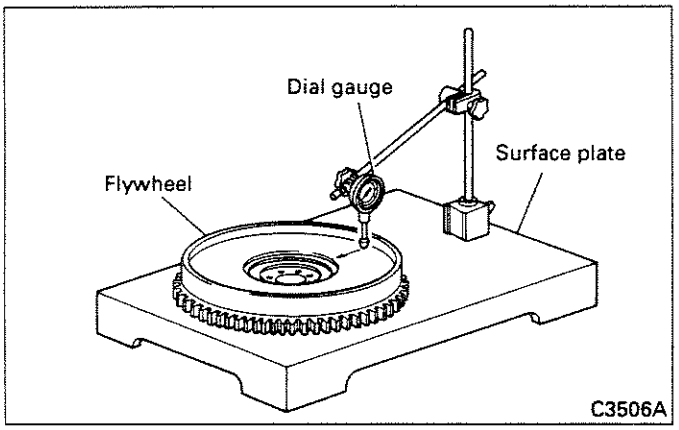

Place the flywheel on a surface plate. To measure distortion, pass a dial indicator over the flywheel from its periphery toward its center.
If distortion exceeds the specified limit, grind the friction surface as necessary.

NOTE:
If the ring gear appears abnormal in any way, replace it before measuring distortion. For details, refer to item (2) of section 5.3.1 and item (8) of section 5.3.3.

(2) Rectifying flywheel friction surface

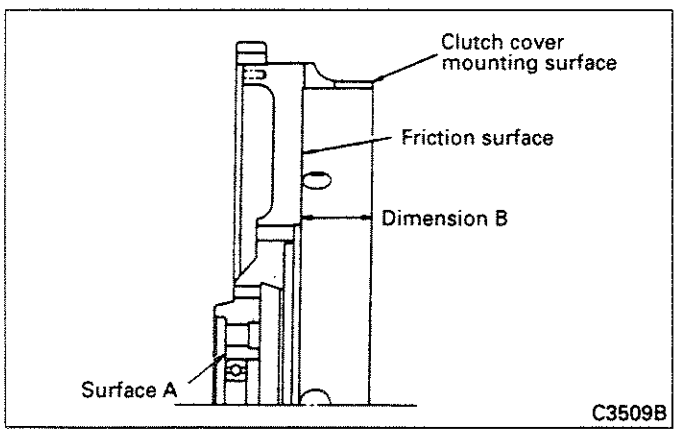

Grind the friction surface so that dimension B (the height from the clutch cover mounting surface to the friction surface) is below the prescribed limit. The friction surface must also be parallel with surface A with a tolerance of 0.1 mm.
If dimension B exceeds the prescribed limit, replace the flywheel.

(3) Idler gear-to-idler shaft clearance

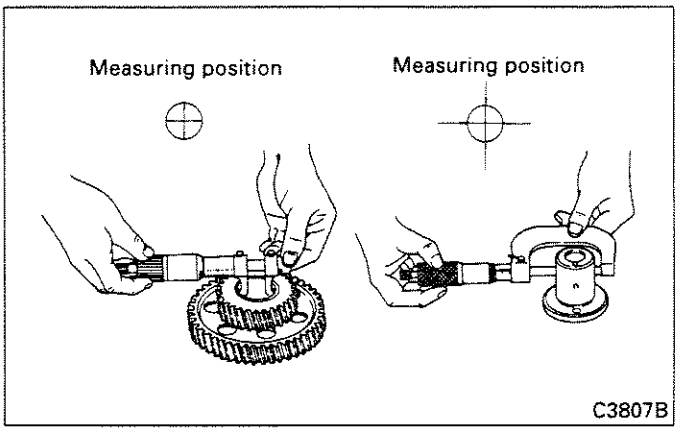

If the clearance exceeds the prescribed limit, replace the bushing in the idler gear.

(4) Replacing idler gear bushing

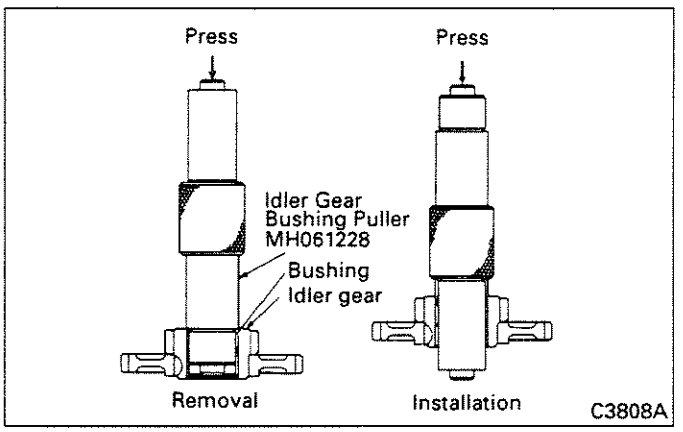

Install the bushing from the side of the idler gear whose internal diameter is chamfered.
After installation, confirm that the bushing-to-idler shaft clearance is within the nominal value range. If it is below the acceptable value, ream the bushing.

(5) Cam profiles

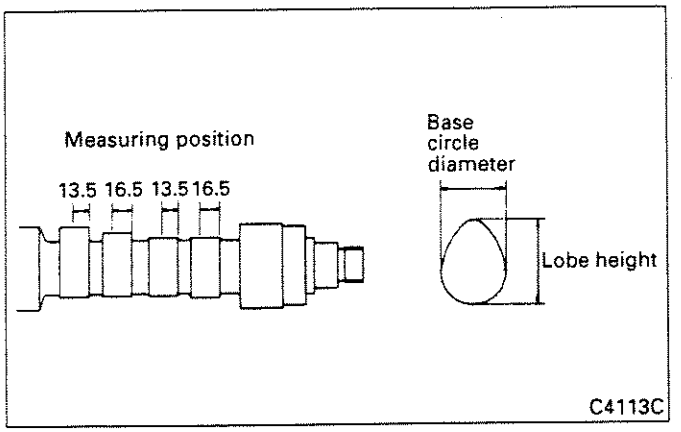

Measure the lobe heights and base circle diameters, and replace the camshaft if the difference between them is below the specified amount.

NOTE:
Since the cams are tapered, they must be measured at the points shown in the diagram.

(6) Camshaft journal-to-camshaft bushing clearance

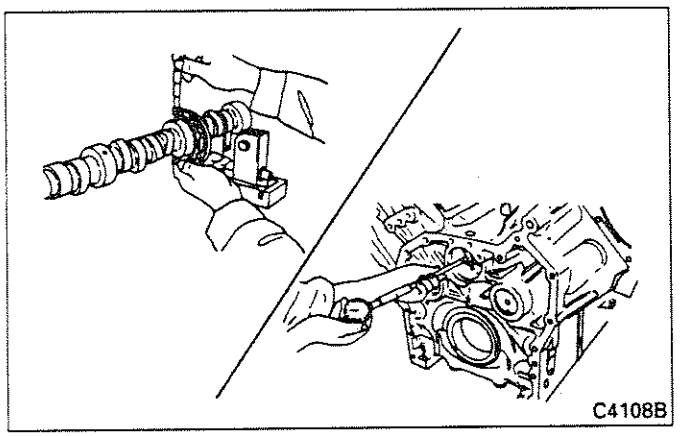

If the clearance exceeds the prescribed limit, replace the camshaft bushing. Refer to item (7) for details.

(7) Replacing camshaft bushings

(a) Removal
Remove the camshaft bushings in the following order: No. 4→No. 3→No. 2→No. 1→No. 5. Remove them in accordance with the following instructions.

1) Removing camshaft bushings Nos. 4 to 1

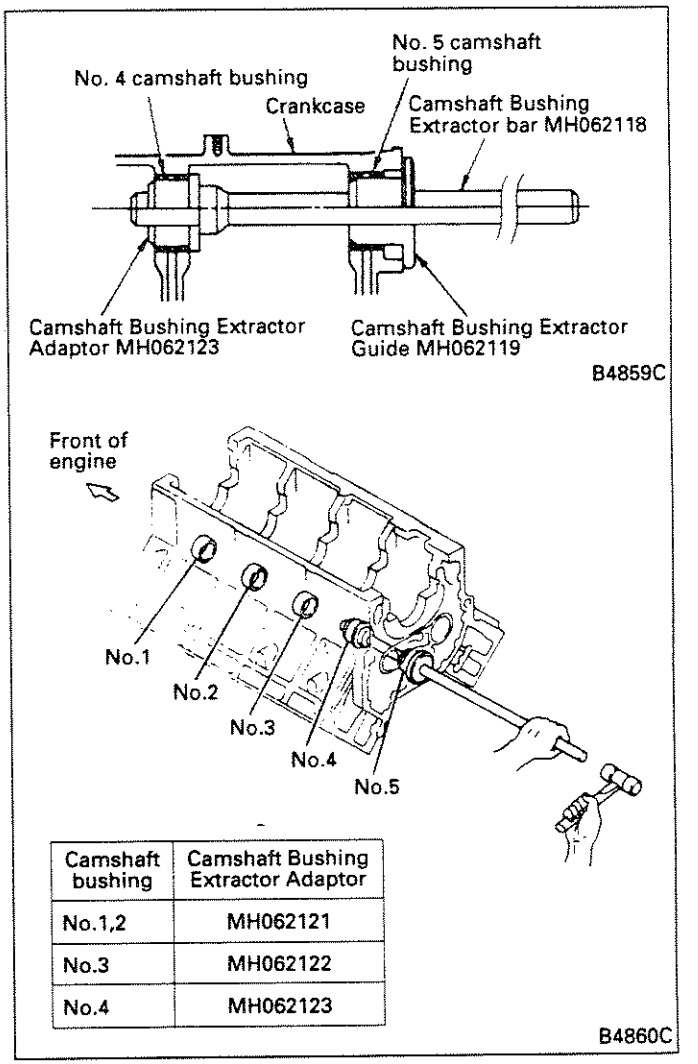

Camshaft bushing	Camshaft Bushing Extractor Adaptor
No.1,2	MH062121
No.3	MH062122
No.4	MH062123

a) Mount the Camshaft Bushing Extractor Adapter and Camshaft Bushing Extractor Guide (special tools) on the Camshaft Bushing Extractor Bar (special tool). Insert the Bar into the crankcase. When doing this, mount the Guide onto the No. 5 crankcase bushing and support the Bar while inserting it.

b) Hold the Camshaft Bushing Extractor Adapter (special tool) against the No. 4 camshaft bushing. As shown in the diagram remove the No. 4 bushing by striking the Extractor Bar with a hammer.

c) After removing the No. 4 bushing, remove bushings Nos. 3 to 1 using the appropriate Camshaft Bushing Extractor Adapter (special tool) for each one.

2) Removing camshaft bushing No. 5

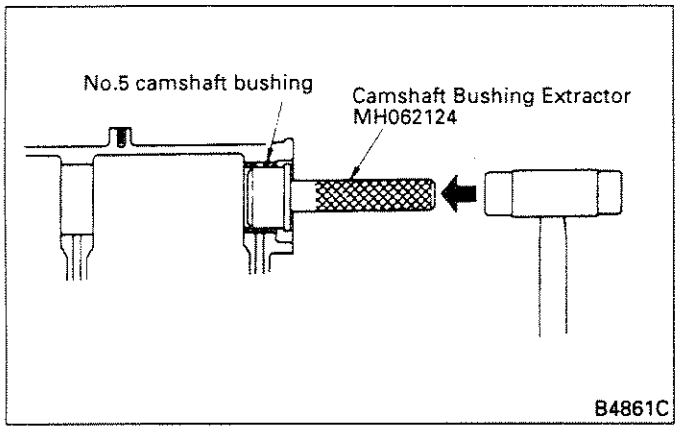

(b) Installation

In accordance with the following instructions, install camshaft bushings Nos. 2, 3, and 4 simultaneously, followed by bushings Nos. 1 and 5, in that order.

1) Simultaneous installation of bushings Nos. 2, 3, and 4

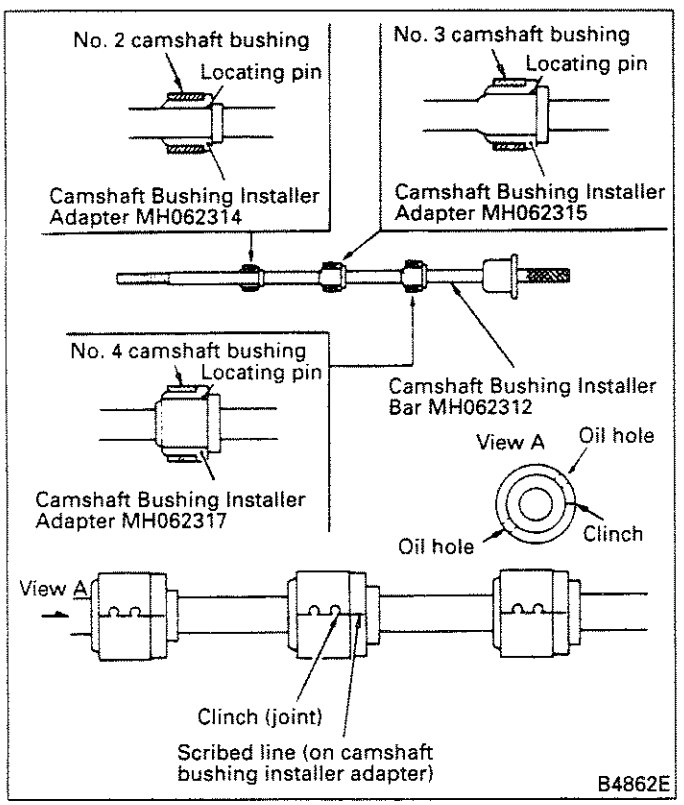

a) Mount the Camshaft Bushing Installer Adapters (special tools) and camshaft bushings Nos. 2 to 4 on the Camshaft Bushing Installer Bar (special tool). When doing this, align the scribed lines on the Camshaft Bushing Installer Adapter (special tool) with the clinch joints on the bushings so that the oil holes will also be aligned.

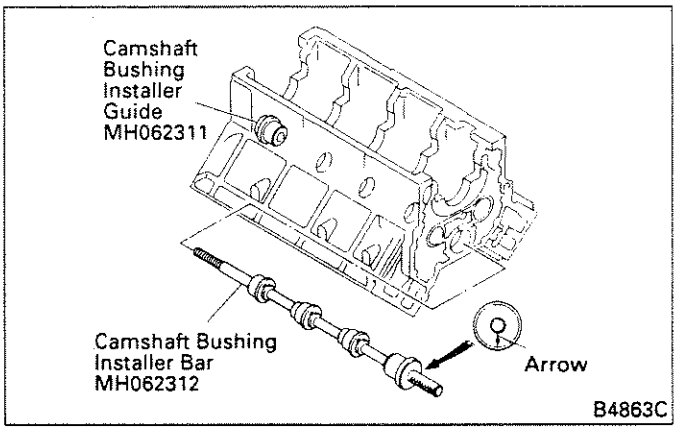

b) Mount the Camshaft Bushing Installer Guide (special tool) on where the No. 1 camshaft bushing is to be installed such that the Camshaft Bushing Installer Bar (special tool) can be supported by the Guide. Then, insert the Installer Bar into the crankcase. When doing this, ensure that the arrow on the Installer Bar points toward the "V" of the crankcase.

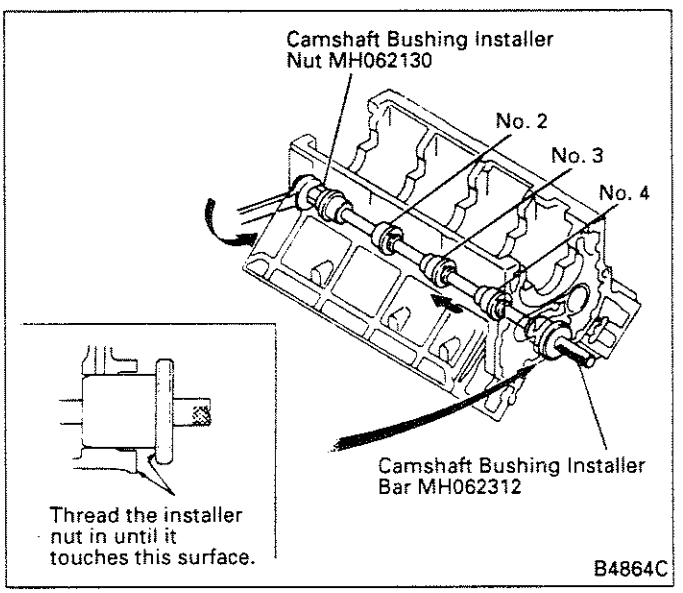

c) Confirm that the clinch joints on the bushings and the scribed lines on the Camshaft Bushing Installer Adapters (special tools) are aligned with each other [refer to item (a) for details]. Screw the Camshaft

Bushing Installer Nut (special tool) onto the end of the Installer Bar, and tighten the Nut to press-fit all the bushings. Continue turning the Nut until the Installer Bar's flange touches the crankcase.

d) After installing the bushings, remove the Camshaft Bushing Installer Nut and gently withdraw the Installer Bar.

NOTE:
When withdrawing the Installer Bar, take care not to damage the inside surfaces of the bushings.

2) Installing camshaft bushings Nos. 1 and 5

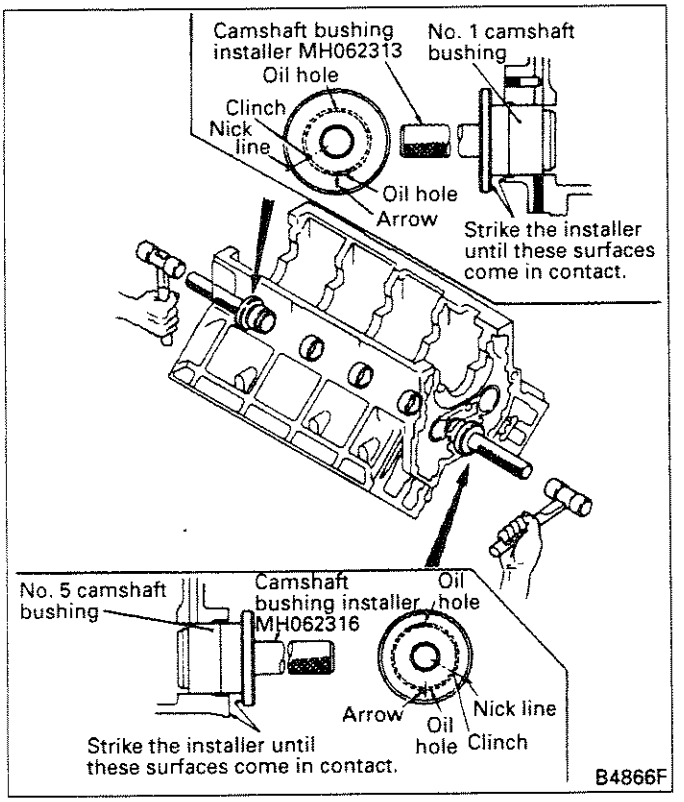

Install the bushings as follows: Align the nick line on the Camshaft Bushing Installer (special tool) with the clinch joints on the bushings so that the oil holes will also be aligned. Face the arrow on the Camshaft Bushing Installer toward the "V" of the crankcase. Strike the Installer until its flange touches the crankcase.

(8) Camshaft bend

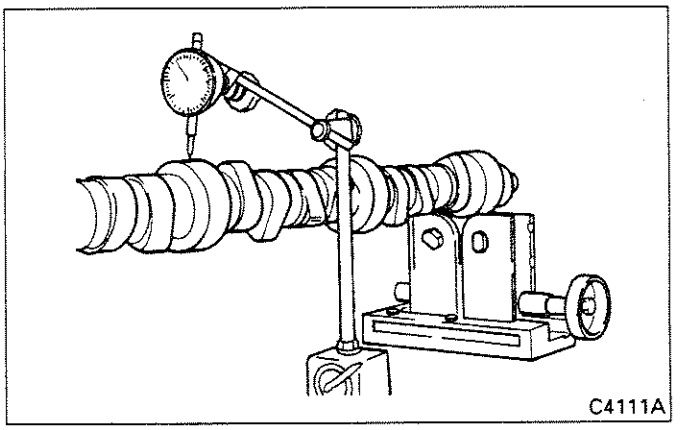

Measure the extent of bend in the crankshaft. If it exceeds the specified limit, replace the crankshaft.

NOTE:
Apply a dial indicator to the camshaft and turn the camshaft through one revolution. One-half of the dial indicator reading represents the camshaft's bend.

(9) Camshaft-to-camshaft gear fit

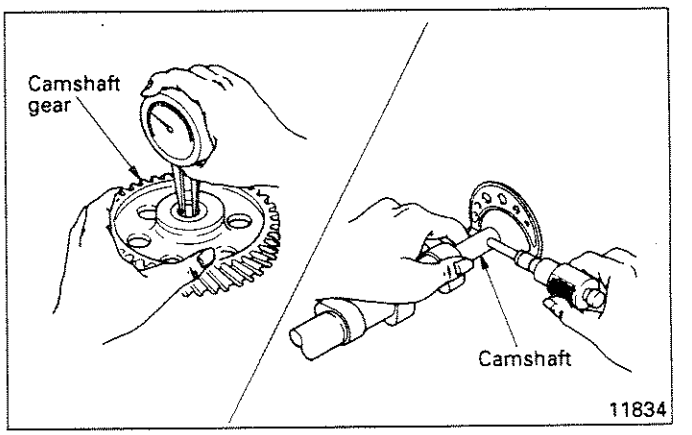

If the amount of interference between the camshaft and its gear is below the nominal value, replace the camshaft or camshaft gear whichever appropriate.

NOTE:
Even if the interference is up to specification, reassembly should be carried out no more than 3 times.

5.3.3 Reassembly

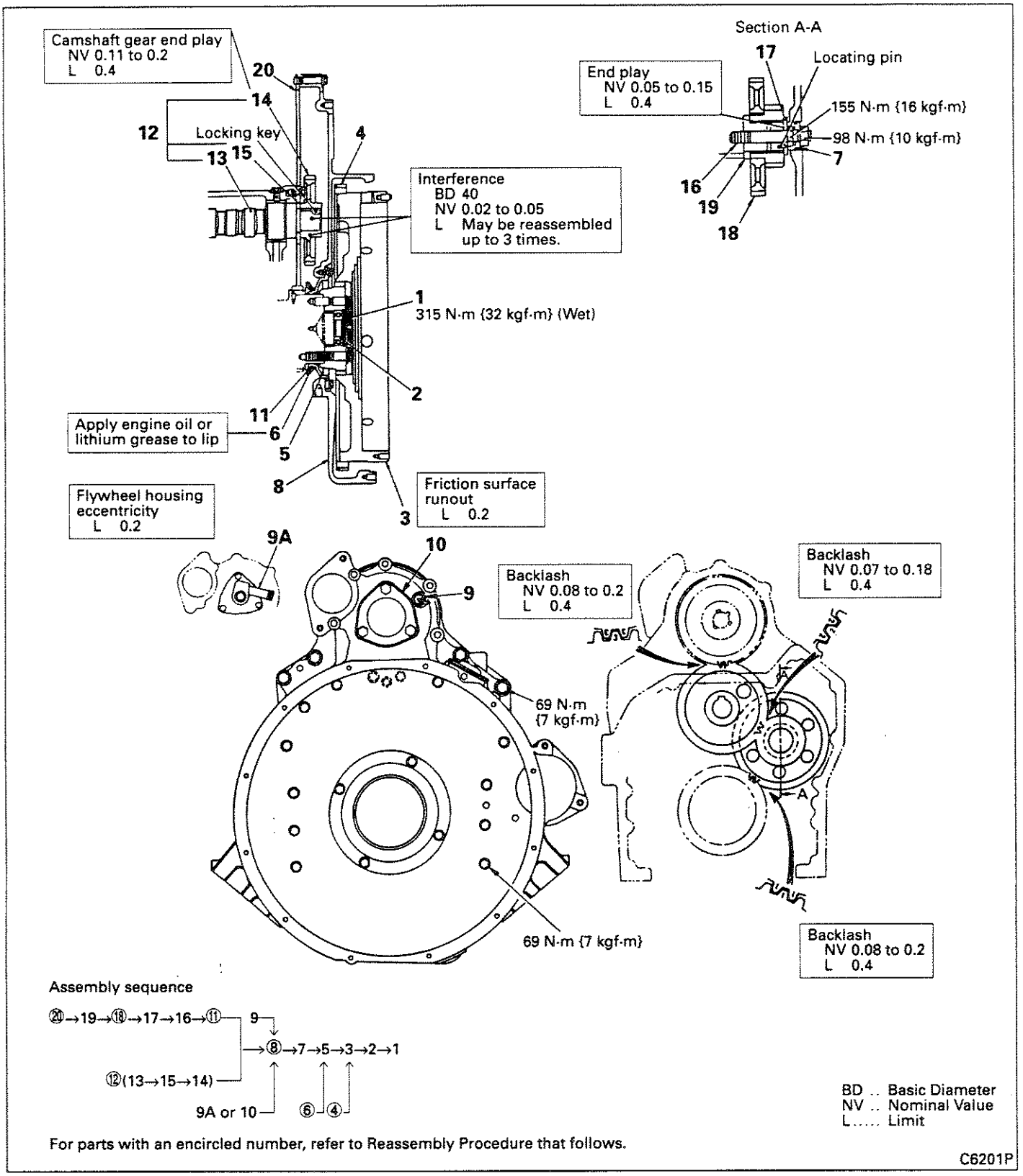

Reassembly Procedure

(1) Mounting rear plate

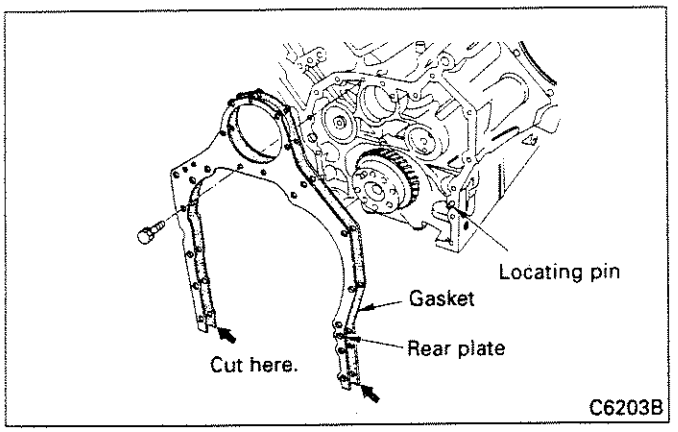

Mount the rear plate and gasket, ensuring that they are aligned with the locating pin on the crankcase.
After the gasket is fitted, its bottom (in front of the oil pan mounting surface) will protrude. Cut off the protruding part of the gasket after fitting the flywheel housing.

(2) Installing idler gear

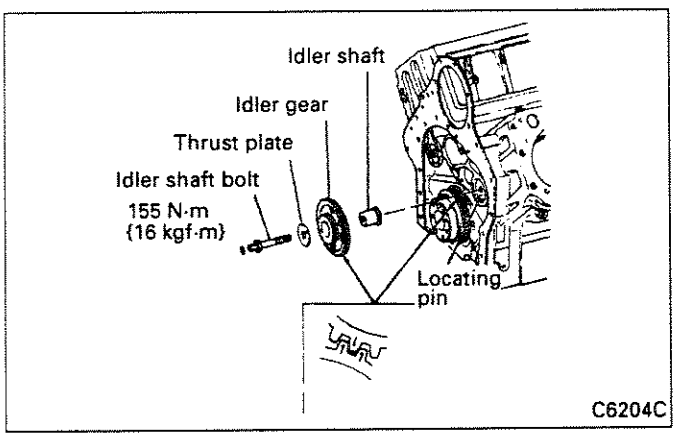

Install the idler shaft, ensuring that it is aligned with the locating pin on the crankcase. Then fit the idler gear, ensuring that the "1" alignment marks on the idler gear and crankshaft gear are aligned with each other. Finally, tighten the idler shaft bolt to the specified torque.

(3) Installing camshaft gear

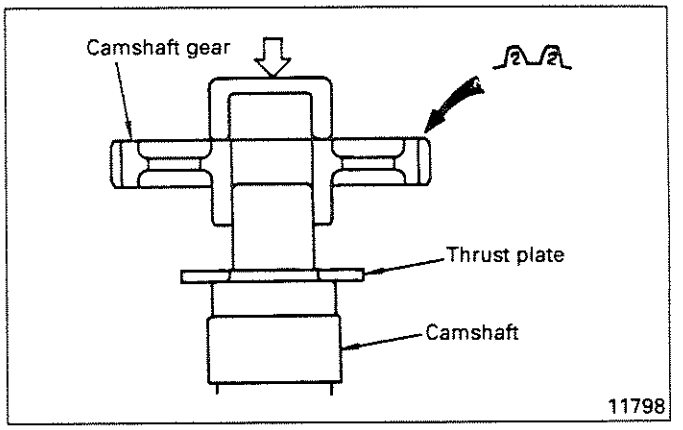

Press the camshaft gear onto the camshaft with the side having maks "2" faced toward the side opposite to the thrust plate side.

NOTE:

1. **Use a cylinder to press the camshaft gear at its central portion. Never press a gear teeth area.**
2. **The camshaft gear and camshaft may be reassembled at a maximum of 3 times.**

(4) Installing camshaft

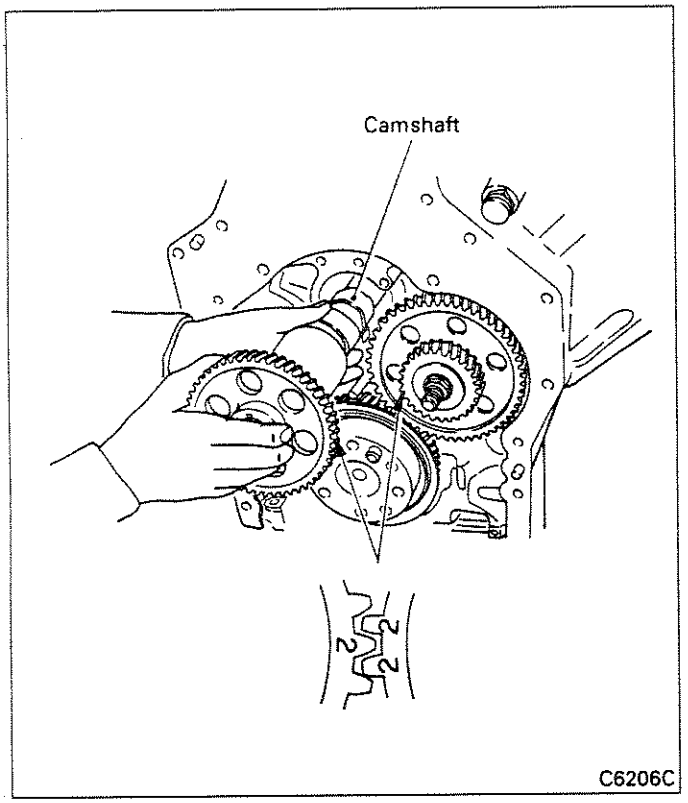

Install the camshaft such that the "2" alignment marks on the camshaft gear and idler gear are aligned with each other.

NOTE:
When installing the camshaft, take care not to damage the camshaft bushings.

(5) Check the end play in the camshaft gear and idler gear. Refer to item (4) of section 5.3.1 for details.

(6) Check each gear's backlash. Refer to item (3) of section 5.3.1 for details.

(7) Installing rear oil slinger

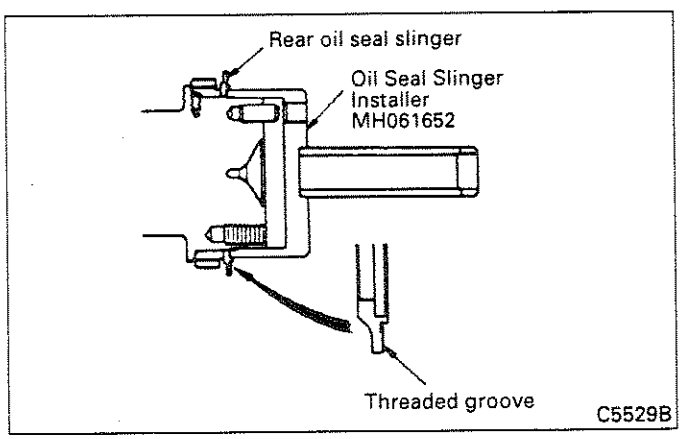

Face the threaded groove toward the flywheel. Using the Oil Seal Slinger Installer (special tool), evenly press the oil seal slinger until it is seated tightly in position.

(8) Fitting rear gear

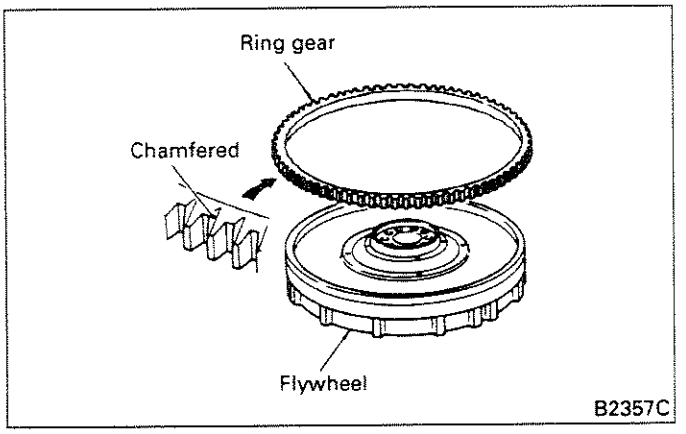

Using a piston heater, heat the ring gear to approximately 100°C for 3 minutes. Fit the ring gear with the non-chamfered side of its teeth toward the flywheel.

(9) Fitting flywheel housing

<Using preformed gasket>

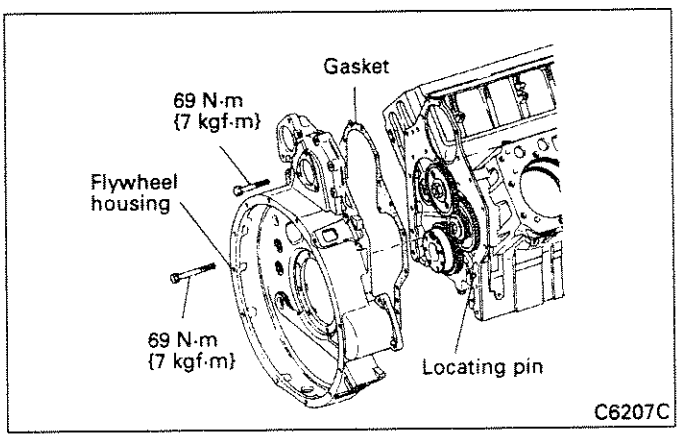

Mount the flywheel housing and gasket such that they are aligned with the locating pin on the crankcase.
After the gasket is fitted, its bottom part (in front of the oil pan mounting surface) will protrude. Cut off the excess portion.
Also cut off the protruding portion of the gasket between the rear plate and crankcase.

<Using sealant>

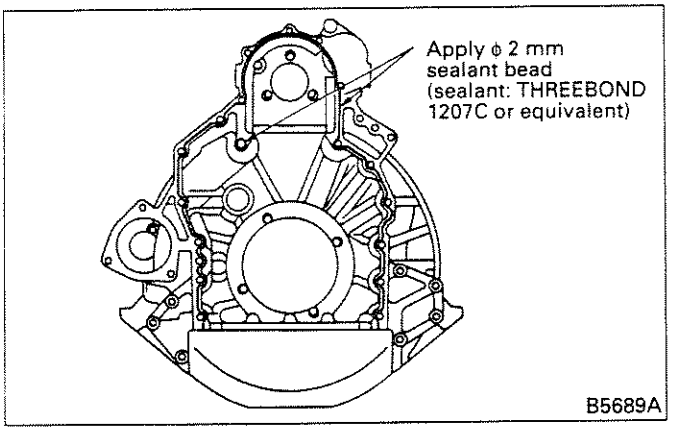

(a) Apply a bead of sealant as shown in the diagram. Fit the flywheel housing within 3 minutes of applying the sealant.

NOTE:

1. **Apply a new bead of sealant whenever the flywheel housing mounting bolts have been loosened.**
2. **Keep the flywheel's sealing surface free of dirt and oil.**
3. **Apply the sealant evenly and without breaks.**
4. **When fitting the flywheel housing, hold it firmly in its correct position to prevent spreading the sealant.**
5. **After fitting the flywheel housing, wait at least 1 hour before moving the engine.**

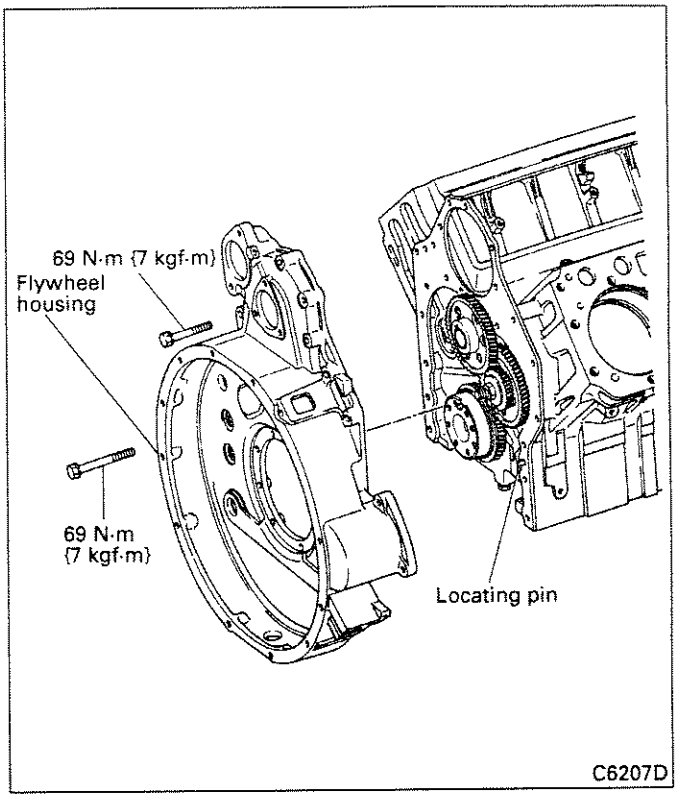

(b) Fit the flywheel housing, ensuring that it is aligned with the locating pin on the crankcase.

(10) Checking flywheel housing eccentricity

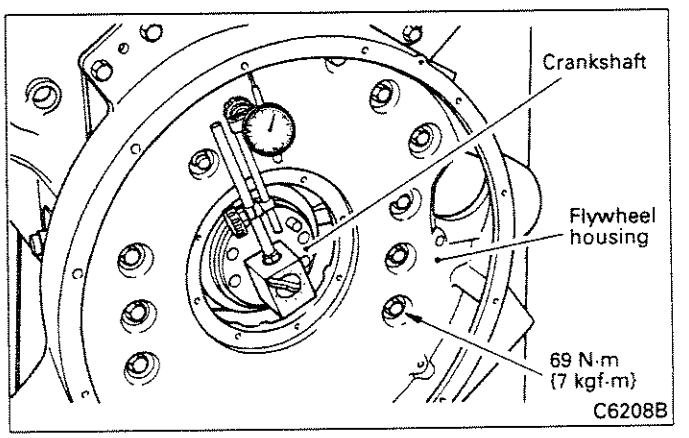

Tighten the flywheel housing mounting bolts to the specified torque. Then check for eccentricity at the flywheel housing I.D. (joint section). If eccentricity exceeds the specified limit, loosen the mounting bolts and lightly strike the housing to rectify its position.

(11)Installing oil seal

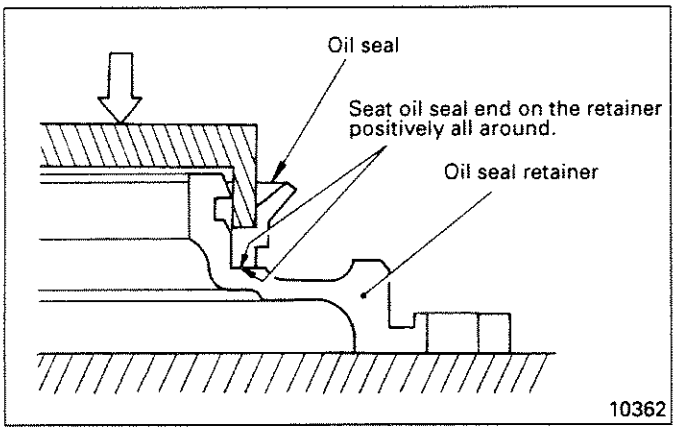

When fitting an oil seal onto its retainer, apply pressure evenly to its entire periphery until it is seated tightly in position.

(12)Checking flywheel runout

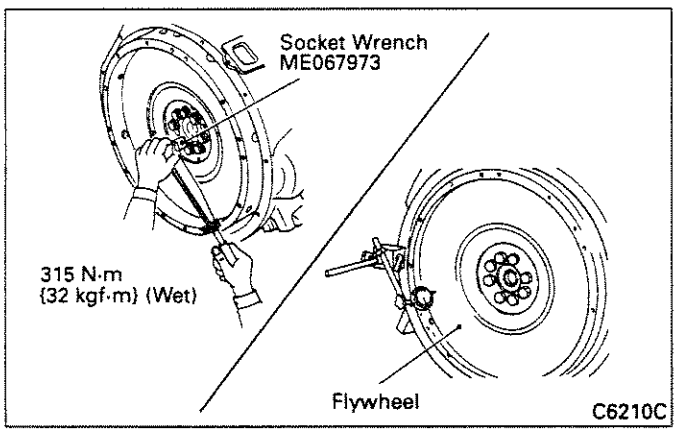

After tightening the flywheel mounting bolts to the specified torque, turn the flywheel and check for runout. If runout exceeds the specified limit, check the bolts' tightness and/or inspect the mounting surface.

(13)Valve timing check

After the engine has been reassembled, the valve timing must be rechecked. A simple valve timing check method is shown below.

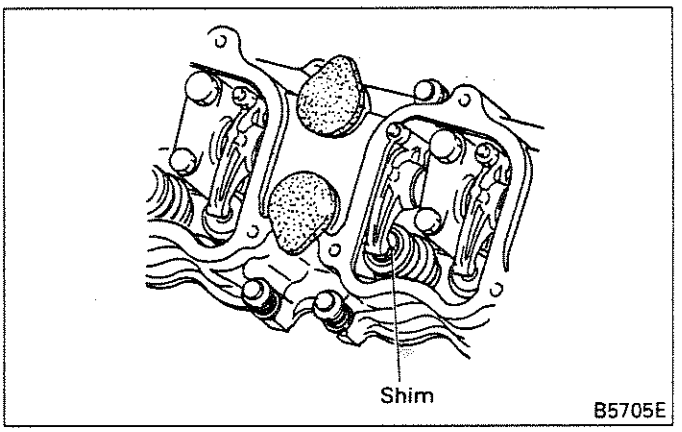

(a) Bring the No.1 cylinder piston to the TDC on its compression stroke.

(b) Insert a 3 mm thick shim between the No.2 cylinder exhaust valve's rocker arm and the valve cap. Turn the adjusting screw until the shim is held firmly and then lock the screw with the lock nut.

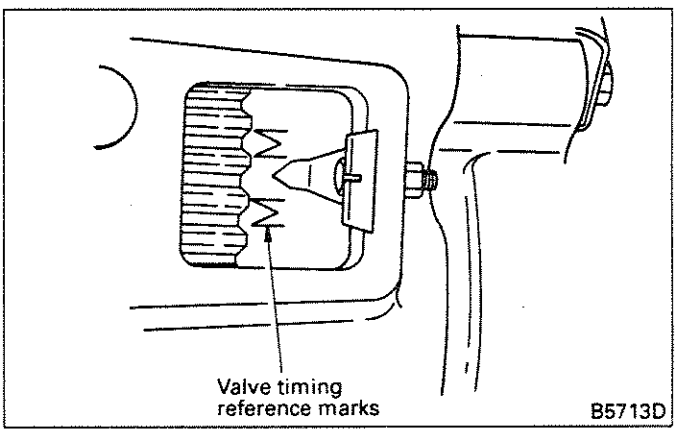

(c) Crank the engine in the normal direction (crockwise as viewed from the front), and make sure that just at the moment the No.1 cylinder exhaust valve starts lifting, the pointer on the flywheel housing is between the valve timing reference marks on the flywheel. If otherwise, recheck the timing mark alignment of each gear pair according to items (2) to (4).

5.4 Crankcase and Main Moving Parts

5.4.1 Disassembly

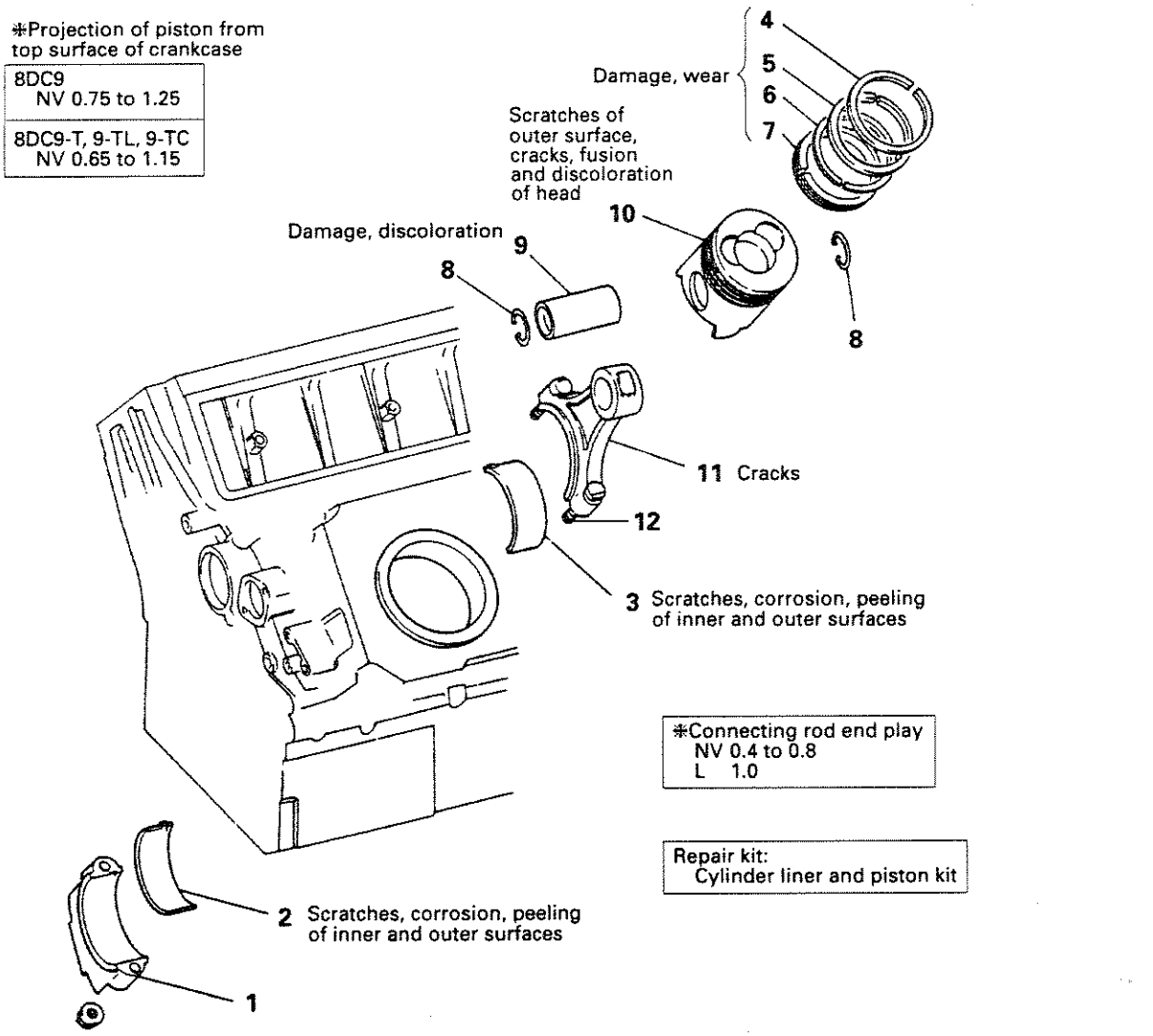

NV .. Nominal Value
L..... Limit

Disassembly sequence

① Connecting rod cap
2 Lower connecting rod bearing
3 Upper connecting rod bearing
④ 1st compression ring
⑤ 2nd compression ring
⑥ 3rd compression ring
⑦ Oil ring
8 Snap ring
9 Piston pin
⑩ Piston
⑪ Connecting rod
*12 Connecting rod bolt

For parts with an encircled number, refer to Disassembly Procedure that follows.
Service items marked with * should be checked before disassembly.
Part marked with * should not be removed unless defects are evident.

C2315A

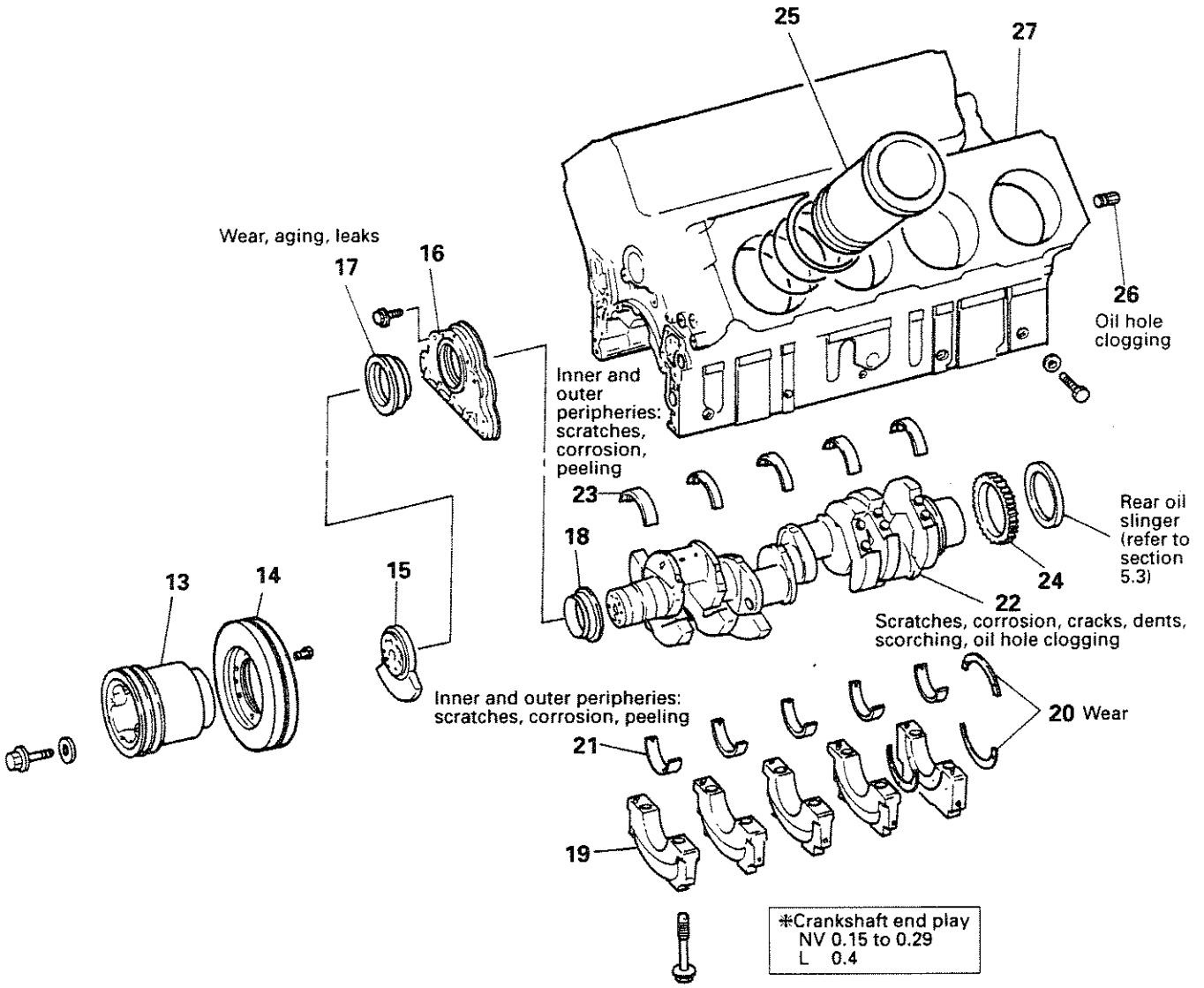

Disassembly sequence

13 Crankshaft pulley
14 Torsional damper
15 Front balance weight
16 Front cover
*17 Front oil seal
*18 Front oil seal slinger
⑲ Main bearing cap
20 Thrust plate
21 Lower main bearing
22 Crankshaft
23 Upper main bearing
*㉔ Crankshaft gear
*25 Cylinder liner
26 Oil spray plug
27 Crankcase

For parts witn an encircled number, refer to Disassembly Procedure that follows.
Service items marked with ⁜ should be checked before disassembly.
Parts marked with * should not be removed unless defects are evident.

B4488A

Disassembly Procedure

(1) Piston projection

The piston projection measurements must conform with specifications, partly since they affect engine performance, and partly since the pistons must not interfere with the valves.

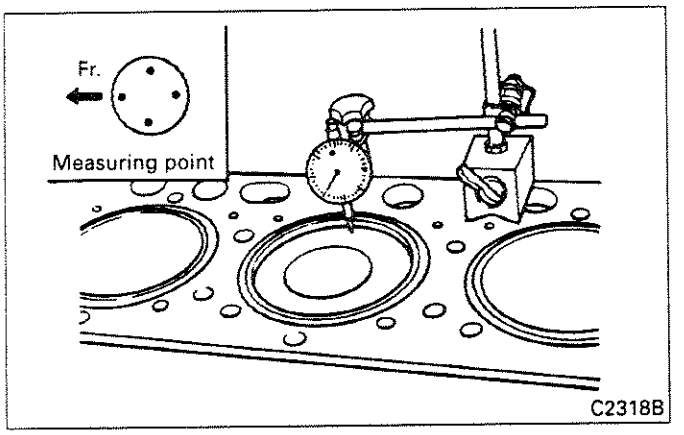

(a) Attach a dial indicator to the top surface of the crankcase and adjust it to zero.
(b) Using the dial indicator, find the piston's top dead center position.
(c) Take measurements at 4 points on the piston's top surface and determine their average.
(d) If the piston projection does not conform with specifications, inspect the connecting rod and check the clearances between neighboring components.

(2) Connecting rod end play

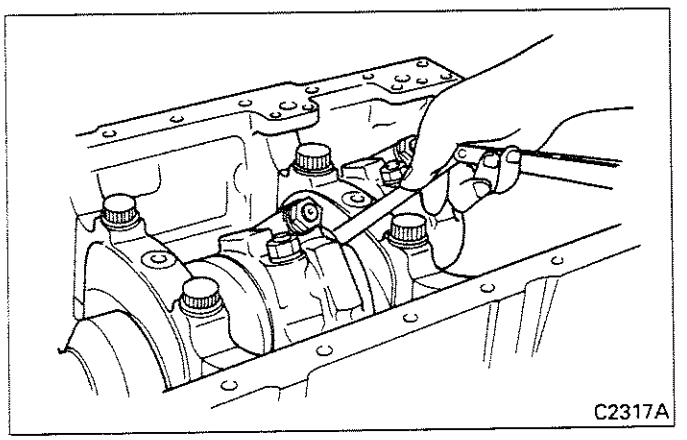

Replace a connecting rod if its end play exceeds the specified limit.

(3) Removing connecting rod cap

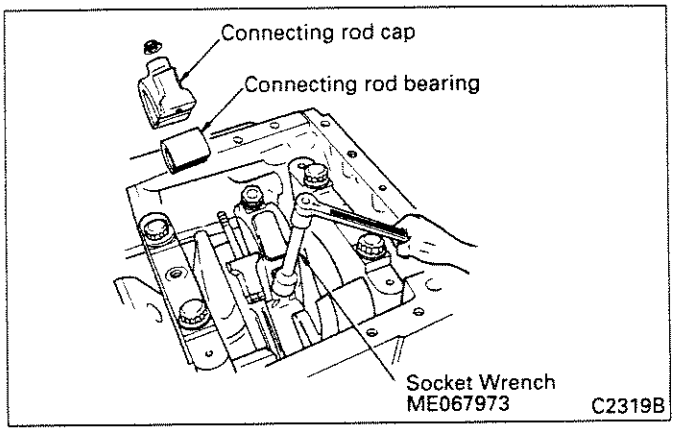

(4) Removing piston

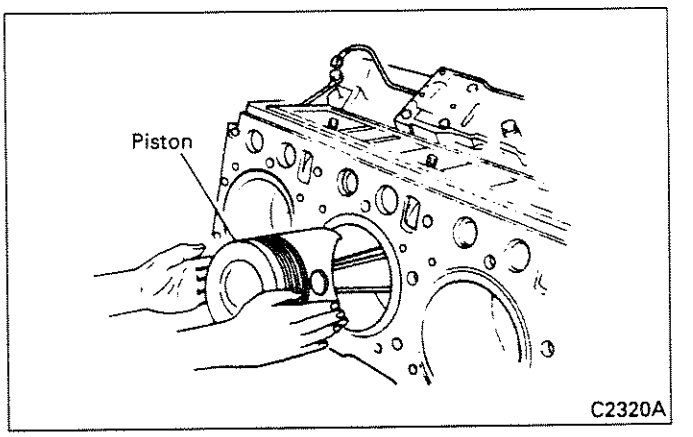

Withdraw the piston from above the crankcase together with its connecting rod.

NOTE:
When withdrawing the piston, take care not to scratch the cylinder liner.

(5) Separating piston from connecting rod

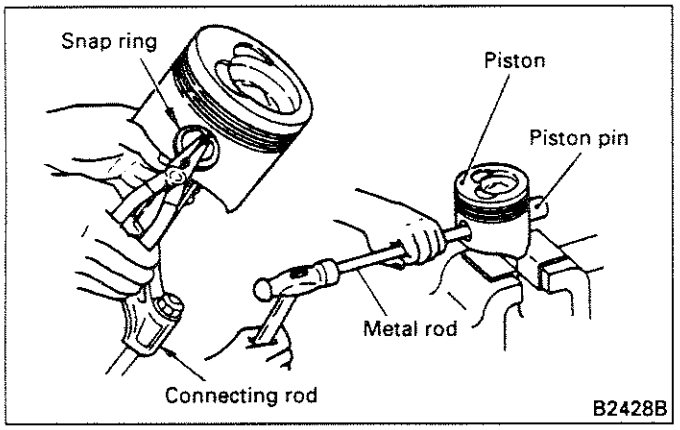

Remove the snap ring, then use a rod and hammer to tap the piston pin out.
If the piston pin is hard to remove, heat the piston in hot water or with a piston heater.

(6) Removing piston rings

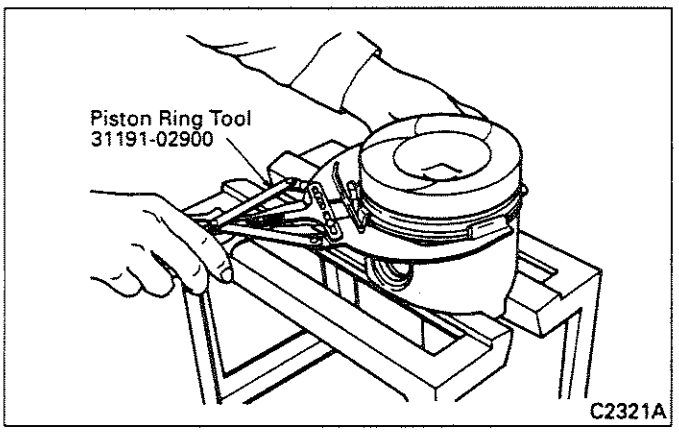

(7) Crankshaft end play

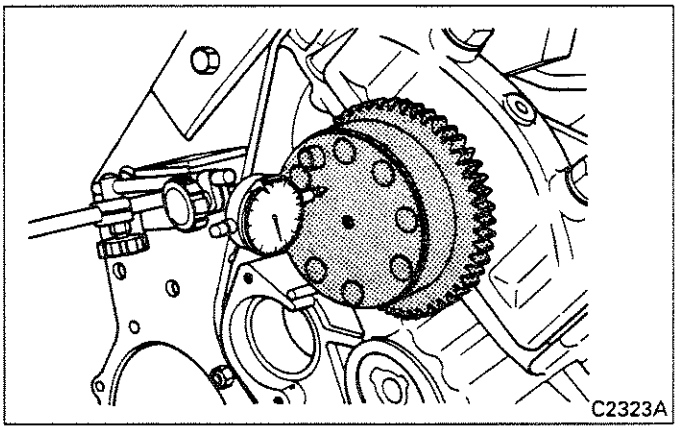

Before removing the main bearing caps, measure the end play in the crankshaft. If end play exceeds the specified limit, replace the thrust plate with an oversize one. Refer to item (6) of section 5.4.3 for details.

(8) Removing crankshaft gear

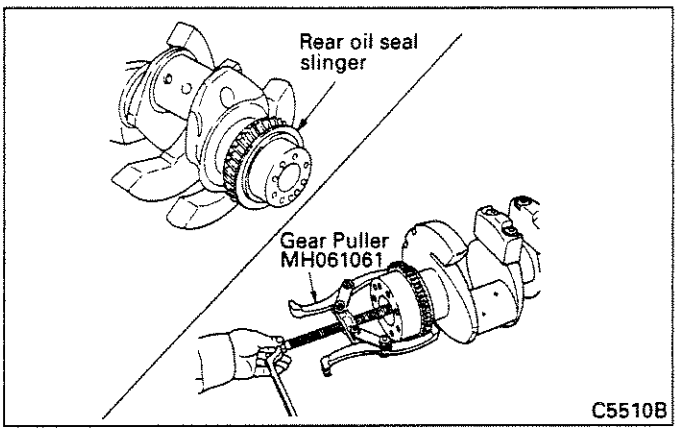

(a) Split the rear oil seal slinger with a chisel and remove it from the crankshaft.
(b) Remove the crankshaft gear from the crankshaft using the Gear Puller (special tool).

NOTE:
Do not attempt to remove the crankshaft by striking it.

(9) Removing main bearing cap

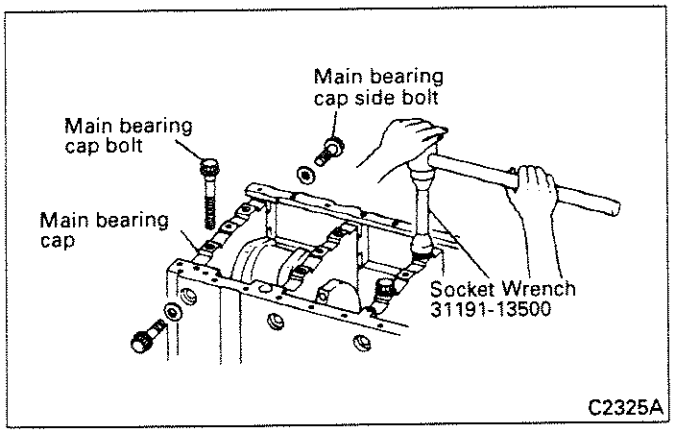

(a) Remove the main bearing cap side bolts, then remove the main bearing cap bolts. For the main bearing cap bolts, use the Socket Wrench (special tool).

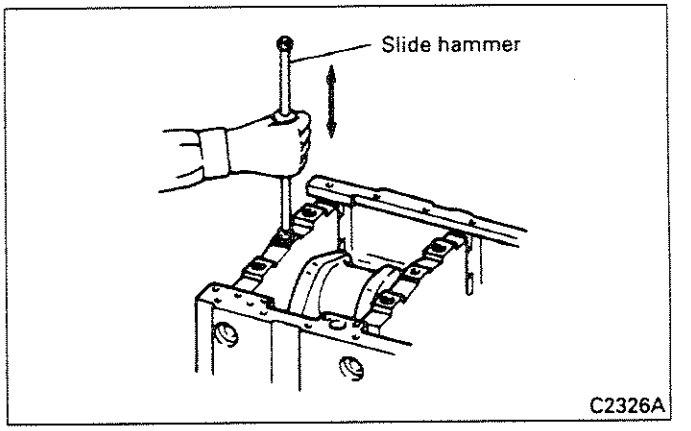

(b) Remove the main bearing cap using a slide hammer.

NOTE:

1. **Do not attempt to pry off main bearing caps with a screwdriver.**
2. **The main bearing caps are positioned on the crankcase with dowel pins and should therefore be pulled straight upward.**

5.4.2 Inspection

BD .. Basic Diameter
NV .. Nominal Value
L..... Limit

Item			BD	NV	L
Clearance between piston ring grooves and piston rings	1st ring		–	0.02 to 0.10	0.25
	2nd ring	8DC9	–	0.05 to 0.08	0.25
		8DC9-T, 9-TL, 9-TC	–	0.07 to 0.10	0.25
	3rd ring	8DC9	–	0.05 to 0.08	0.15
		8DC9-T, 9-TL, 9-TC	–	0.07 to 0.10	0.15
	Oil ring		–	0.03 to 0.06	0.15
Clearance between piston and cylinder liner	8DC9		135	0.163 to 0.189	–
	8DC9-T		135	0.193 to 0.219	–
	8DC9-TL, 9-TC		135	0.183 to 0.209	–
Clearance between piston pin and piston pin hole			50	0.01 to 0.02	0.1

End gap

NV	L	Remarks
0.4 to 0.6	1.5	1st ring 3rd ring Oil ring
0.4 to 0.55		2nd ring

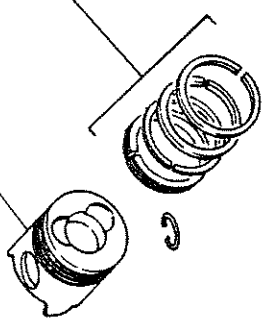

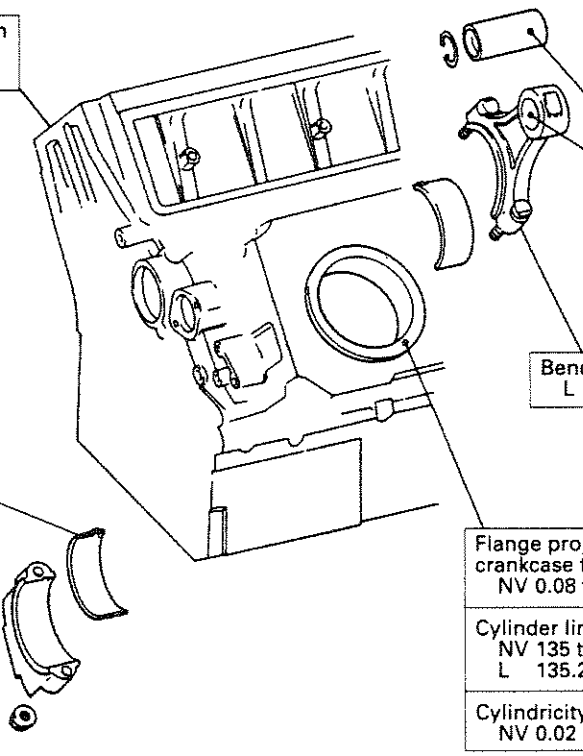

Top surface distortion
NV 0.07 or less
L 0.2

Clearance
BD 50
NV 0.01 to 0.05
L 0.1

Bend and torsion
L 0.05 or less

Connecting rod bearing-to-crankshaft pin clearance
BD 90
NV 0.05 to 0.11
L 0.25

Span when free
L Less than 95.5

Flange projection from crankcase top surface
NV 0.08 to 0.17

Cylinder liner bore
NV 135 to 135.04
L 135.25

Cylindricity
NV 0.02 or less

C4804A

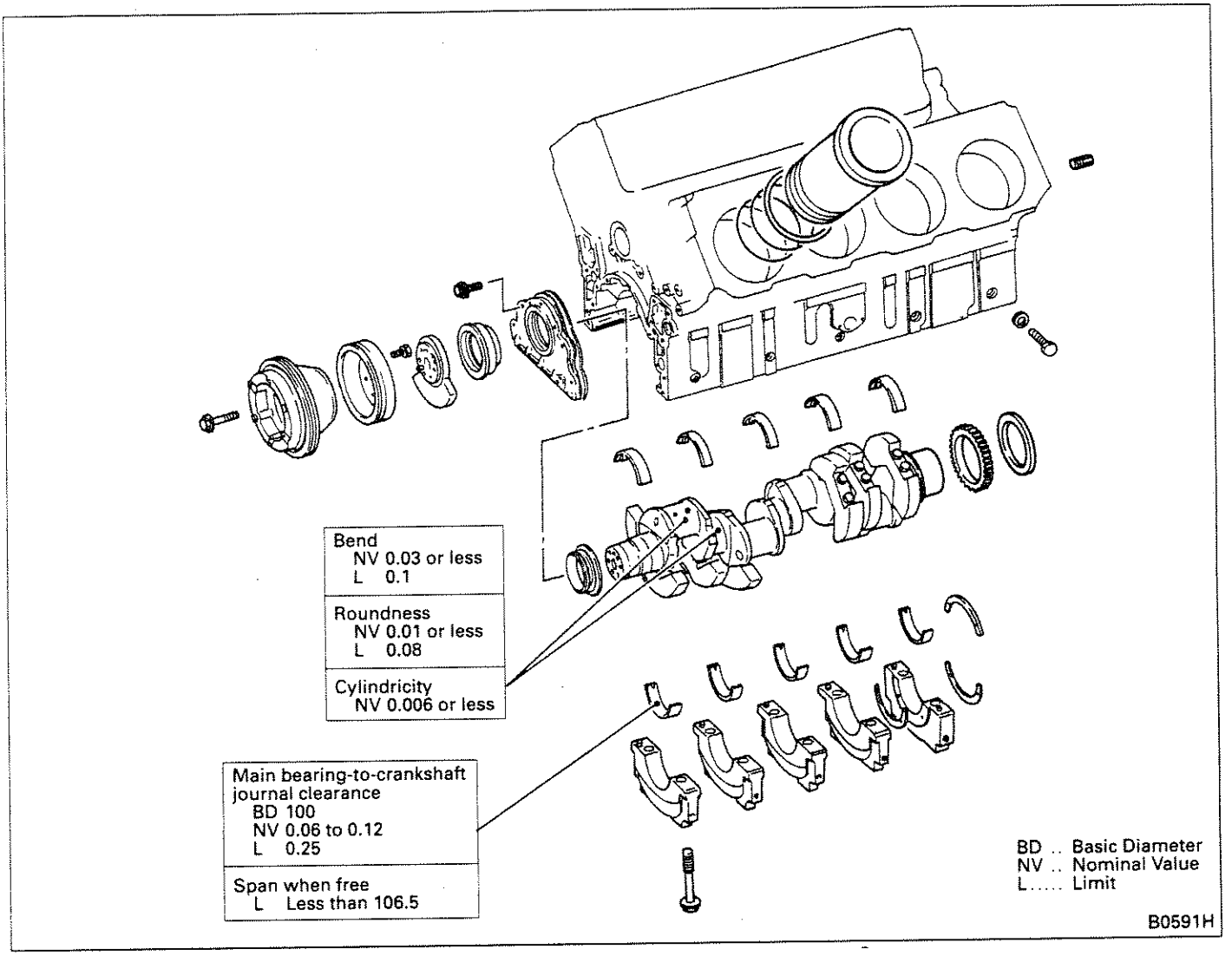

Inspection Procedure

(1) Distortion of crankcase top surface

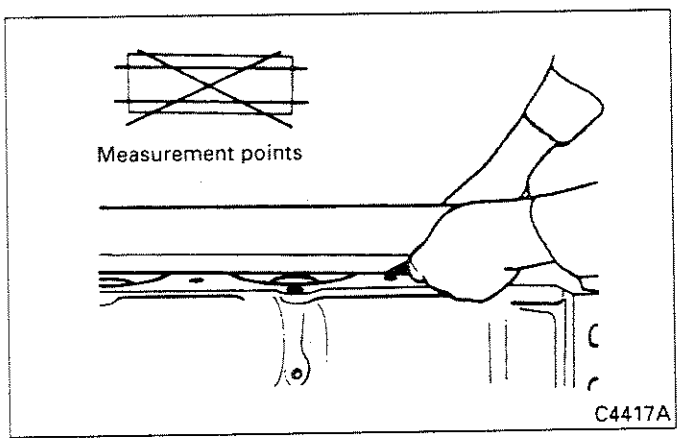

If distortion of the crankcase top surface exceeds the specified limit, correct it with a surface grinder.

NOTE:

1. **When grinding the crankcase, take care that the piston projection does not exceed its nominal level. Refer to item (1) of section 5.4.1 for details.**
2. **Remove the cylinder liners before measuring distortion. Refer to item (4) for cylinder liner replacement.**

(2) Cylinder liner bore

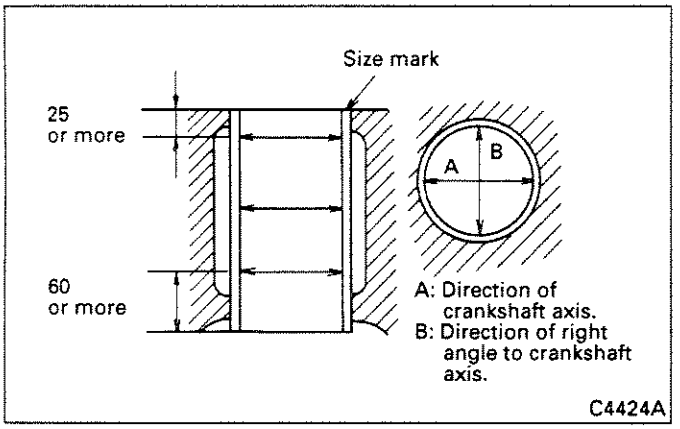

Measure the cylinder liner's bore diameter at 6 points, as shown in the diagram. If the diameter exceeds the prescribed limit, replace the cylinder liner or bore it to an oversize. Refer to item (4) for details of cylinder liner replacement.

(3) Cylinder liner flange projection

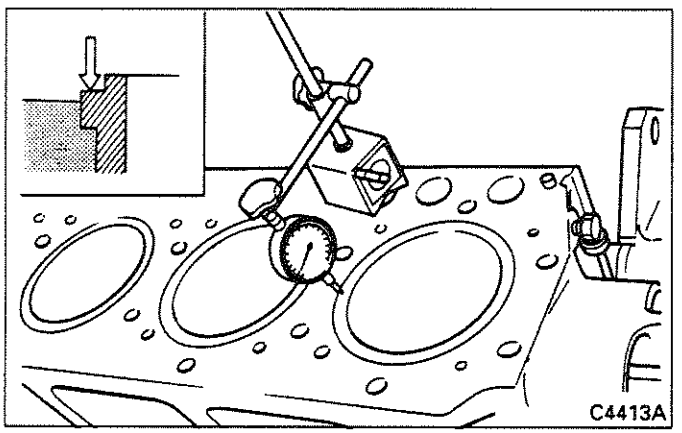

If any cylinder liner flange projection does not conform with its specified nominal value, replace the cylinder liner or crankcase. Refer to item (4) for details of cylinder liner replacement.

(4) Replacing cylinder liner

(a) Removal

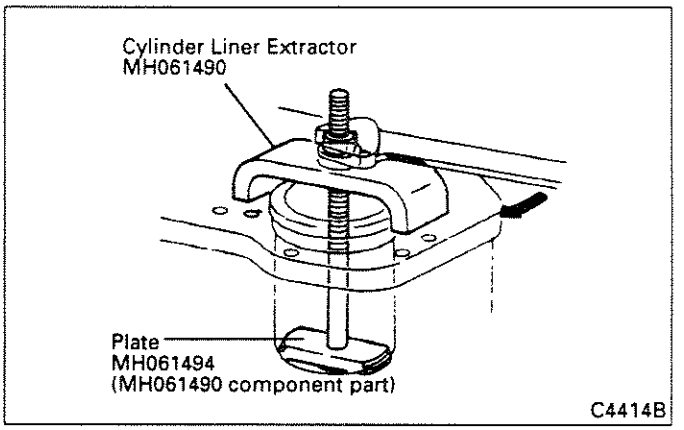

(b) Installation

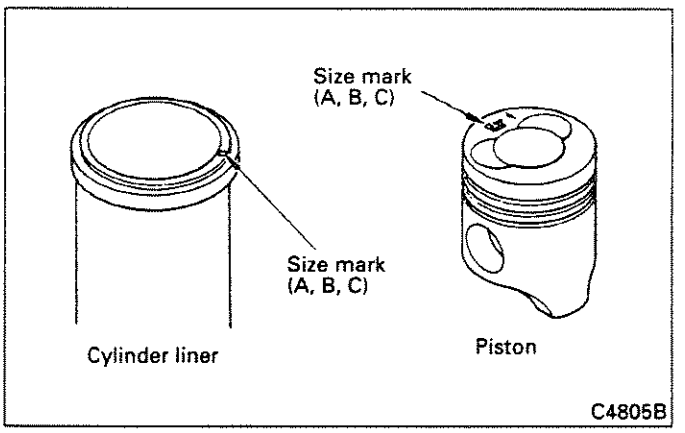

1) Make sure the new cylinder liner bears the same size mark as that of the piston.

Piston size mark	Cylinder liner size mark
A	A
B	B
C	C

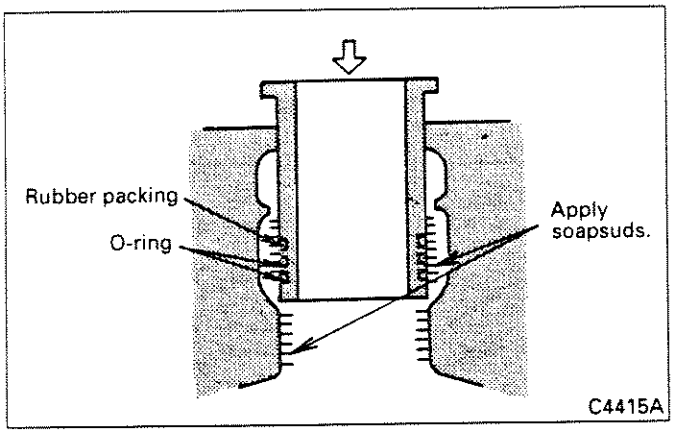

2) Fit new rubber packing and a new O-ring onto the cylinder liner. Apply soap suds to the crankcase and cylinder liner at the points where they will touch each other.

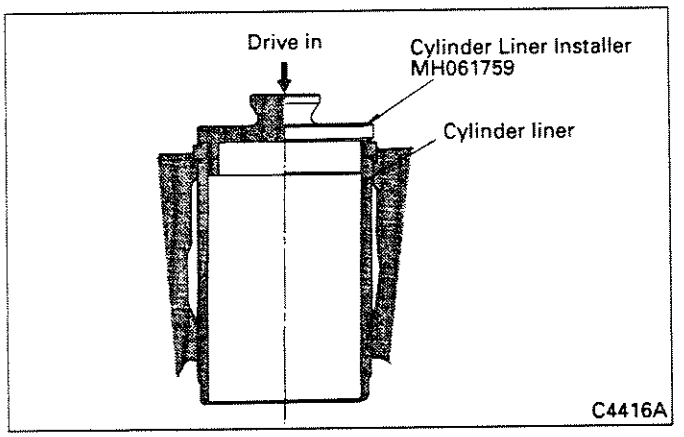

3) Using the Cylinder Liner Installer (special tool), gently tap the cylinder liner down until its flange is securely seated on the crankcase.

NOTE:

1. **Do not stretch O-rings more than necessary, and be careful not to damage them.**
2. **Contact with gas oil, kerosene, anti-corrosion oil, and similar fluids causes O-rings to swell. Immediately wipe off any such fluids that come into contact with the O-rings.**
3. **After installing a cylinder liner, carry out a leak test to check for air-tightness. Apply thrust force to the cylinder liner flange during the leak test.**

(5) Selection of pistons and cylinder liners

A piston may be either standard or oversize. Cylinder liners are selected accordingly.

(a) Standard piston

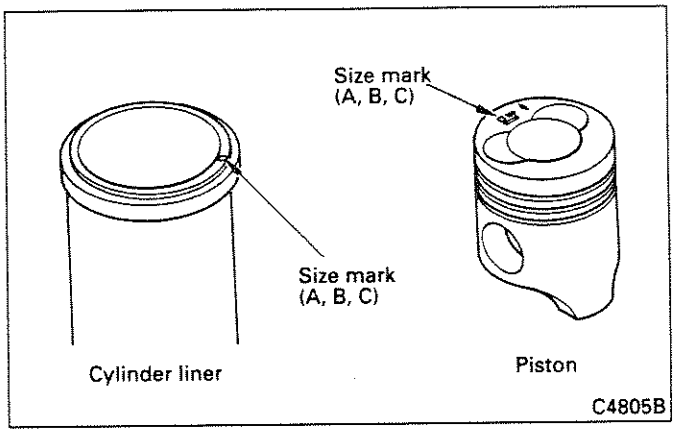

The piston must bear the same size mark as that stamped on the cylinder liner.

NOTE:

Whenever a piston is replaced, the piston rings must also be replaced. Never use old piston rings.

(b) Oversize piston

In accordance with the following instructions, bore the cylinder liner to suit the type of oversize piston to be used (+0.5, +0.75, or +1.00 mm).

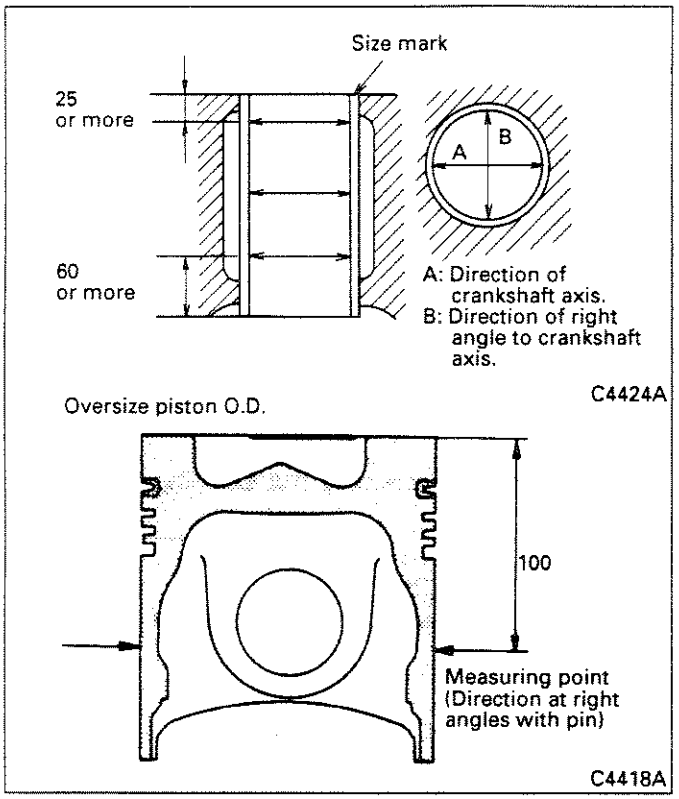

1) Determine the amount of metal to bore out. To do this, measure the bore diameter of every cylinder liner and find the most worn point.
2) Bore and hone-finish the cylinder liner such that the clearance between the oversize piston and cylinder liner is up to specification.

NOTE:

1. **Even if only one cylinder requires boring, bore every cylinder to the same oversize diameter.**
2. **Replace the piston rings with rings corresponding to the degree of oversize.**

(6) Piston-to-cylinder liner clearance

If the clearance is out of specification, replace the piston or cylinder liner. Refer to item (5) for details.

(7) Piston-to-piston ring clearance

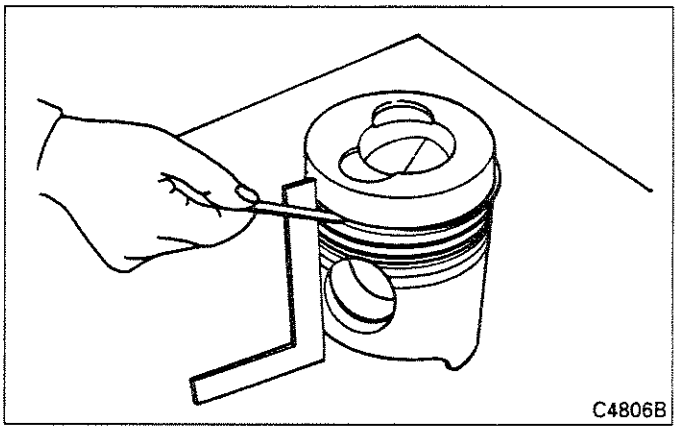

If the clearance exceeds the specified limit, replace the piston or piston rings.

NOTE:

1. **After removing any carbon deposits, measure the clearance around the piston's entire circumference.**
2. **Always replace piston rings as a set, never individually.**

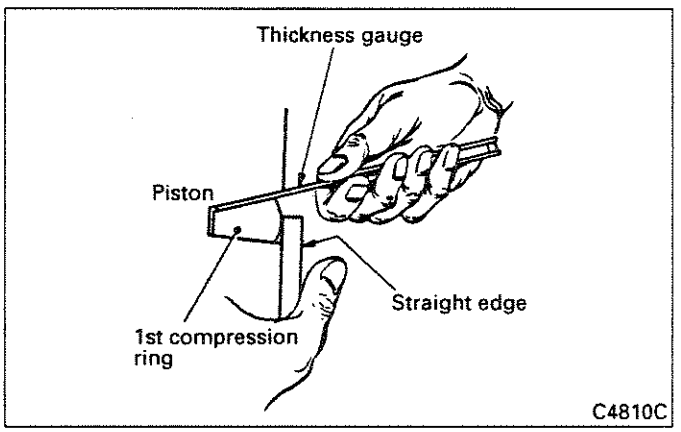

Measure the 1st compression ring clearance while pressing the ring against the piston with a straight edge.

(8) Piston ring end gaps

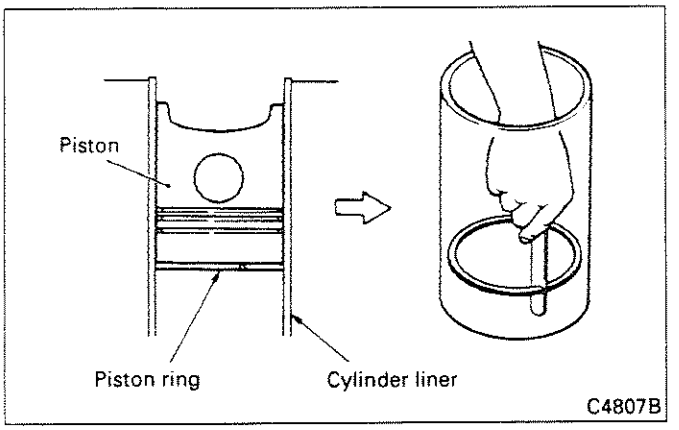

Piston ring end gaps can be measured with the piston rings either horizontally pushed into a standard cylinder liner or actually fitted to a piston in the crankcase. Replace the rings if any gap exceeds the specified limit.

Standard cylinder liner bore diameter: 135±0 mm

NOTE:
Use a piston to push the piston rings into the cylinder liner for measurement.

(9) Piston-to-piston pin clearance

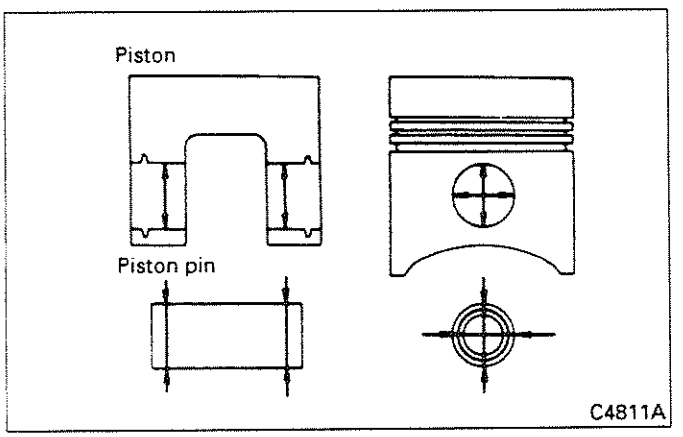

If the clearance exceeds the specified limit, replace the piston pin or piston.

NOTE:
Whenever a piston is replaced, the piston rings must also be replaced. Never use old piston rings.

(10) Piston pin-to-connecting rod bushing clearance

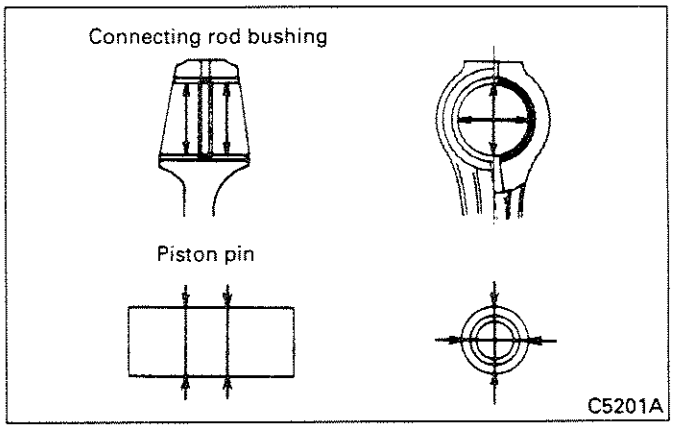

If the clearance exceeds the specified limit, replace the connecting rod bushing.

(11) Replacing connecting rod bushing

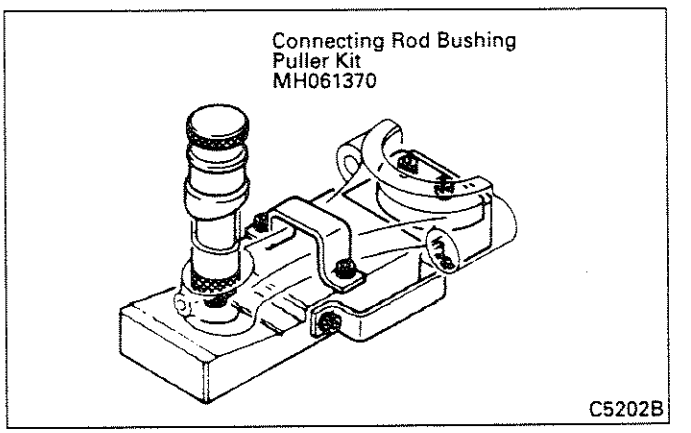

To replace the bushing, use the Connecting Rod Bushing Puller Kit (special tool) in accordance with the following instructions.

(a) Removing bushing

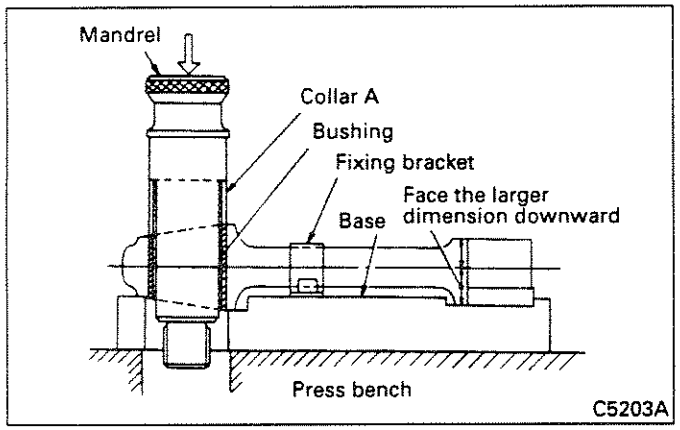

1) Remove the bearing from the connecting rod's big end and mount the connecting rod on the Base (special tool).
2) Set the Mandrel and Collar A (special tools) on the connecting rod's small end, as shown in the diagram. Slowly apply pressure with a press that has a capacity of at least 49 kN {5000 kgf}.

(b) Press-fitting bushing

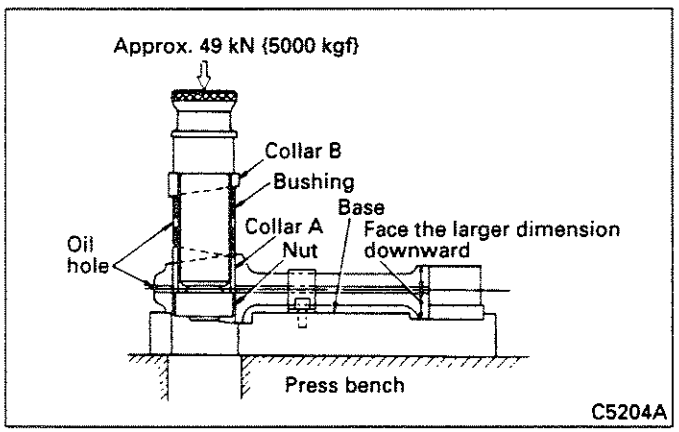

1) Place the bushing in the position shown in the diagram relative to the Mandrel, Collar B, Collar A, and Nut (special tools).
2) Apply engine oil to the connecting rod's small end.
3) Apply pressure from above such that the bushing is pressed into the connecting rod's small end.
4) After press-fitting the bushing, remove the special tools. Then, ream the bushing such that the clearance between the bushing and piston pin is up to the specified nominal value.

NOTE:

1. **When press-fitting the bushing, align the oil hole in the bushing with the oil hole in the connecting rod.**
2. **When the piston pin is inserted, ensure that it turns easily and without play.**

(12) Connecting rod bend and torsion

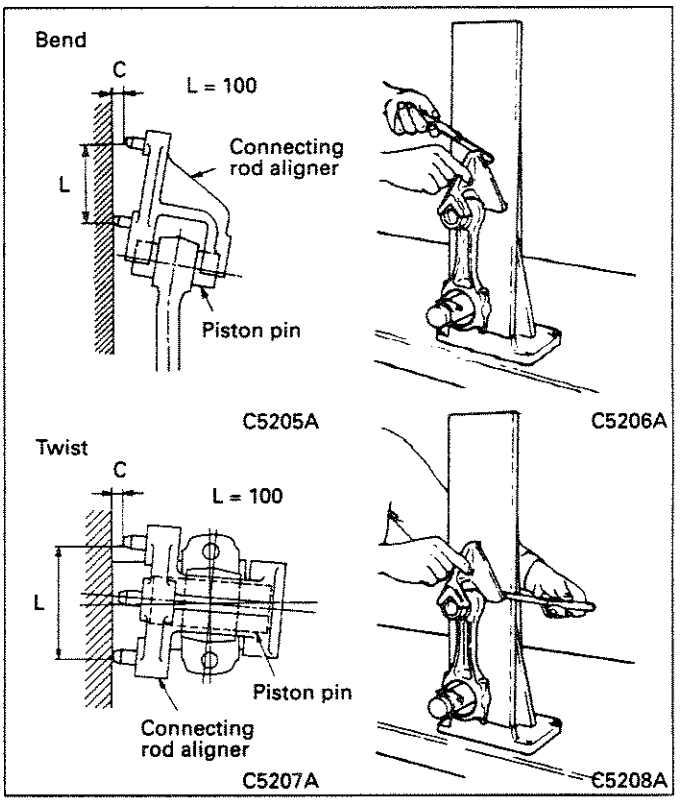

Measure the connecting rod's bend and torsion using a special connecting rod aligner. If the measurements exceed the specified limits, replace the connecting rod or correct it using a press.

NOTE:

1. **Measurements must be made with the connecting rod bushing and upper and lower connecting rod bearings fitted in their respective positions.**
2. **Measurements must be made with the connecting rod cap mounting nuts tightened to their specified torques.**

(13) Tension in connecting rod bearing and main bearing when free

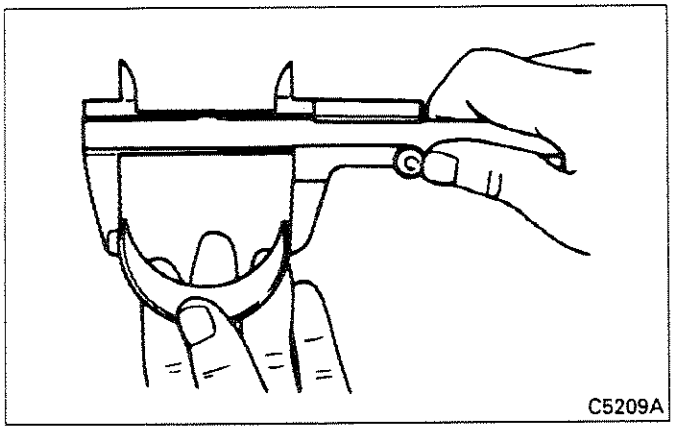

If the tension is less than the specified requirement, replace the upper and lower bearings as a set.

NOTE:
Do not attempt to manually expand the bearing if the tension is insufficient.

(14) Connecting rod bearing-to-crankshaft pin clearance

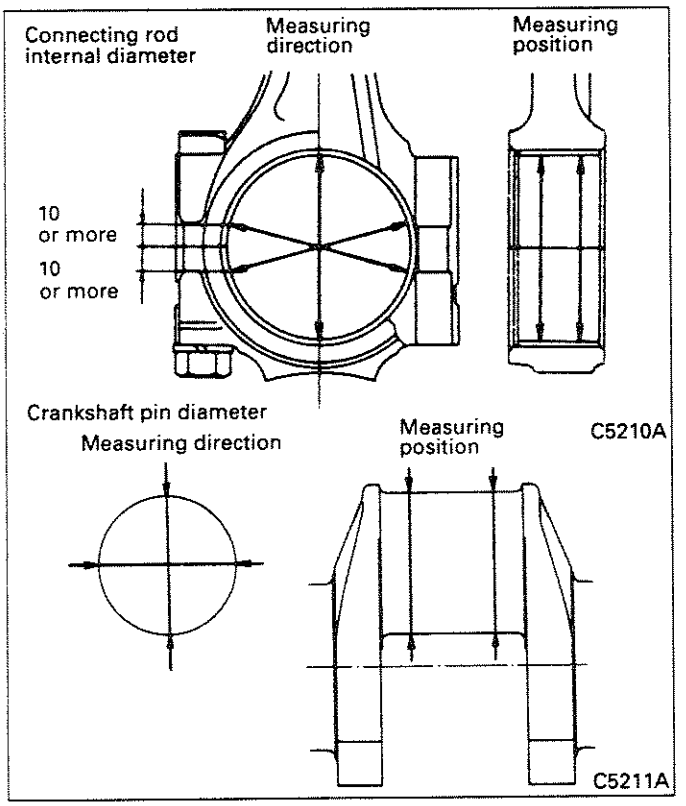

If the clearance exceeds the specified limits, replace the upper and lower bearings as a set.

NOTE:
The connecting rod cap nuts must be tightened to the specified torque when measurements are made.

(15) Main bearing-to-crankshaft journal clearance

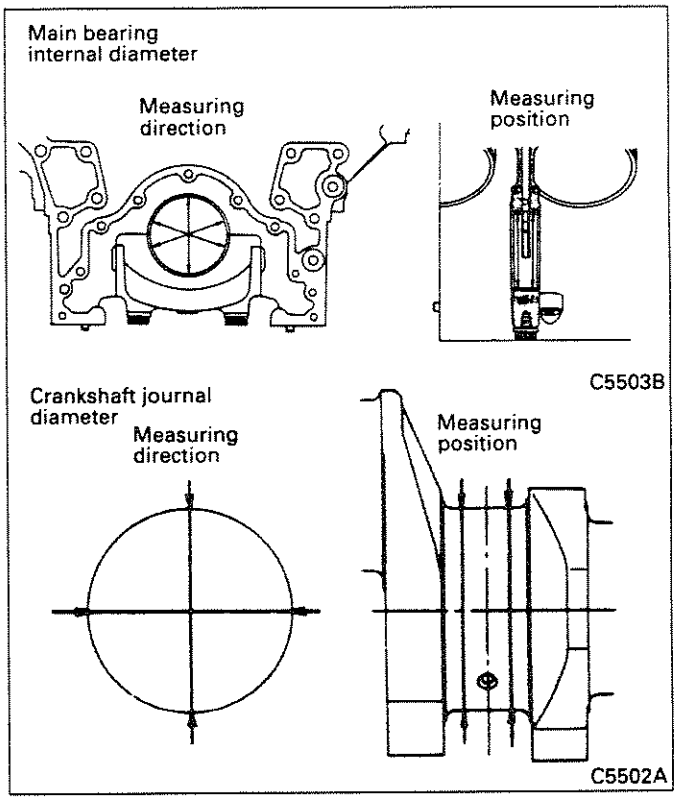

If the clearance exceeds the specified limits, replace the upper and lower bearings as a set.

(16) Roundness and cylindricity of crankshaft pin and journal

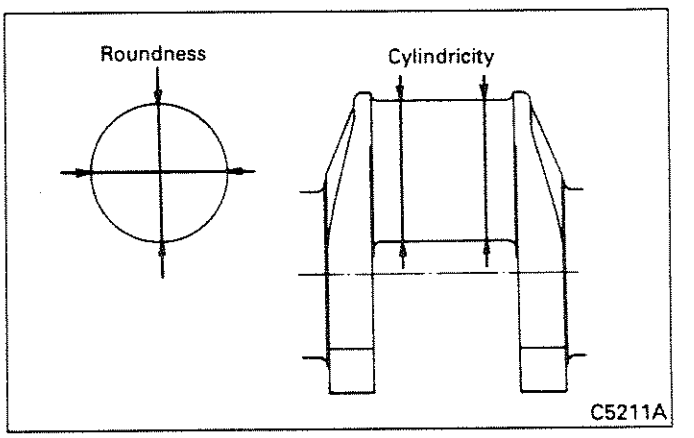

If roundness and cylindricity exceed the specified limits, grind to undersize. Refer to item (18) for details.

(17)Crankshaft bend

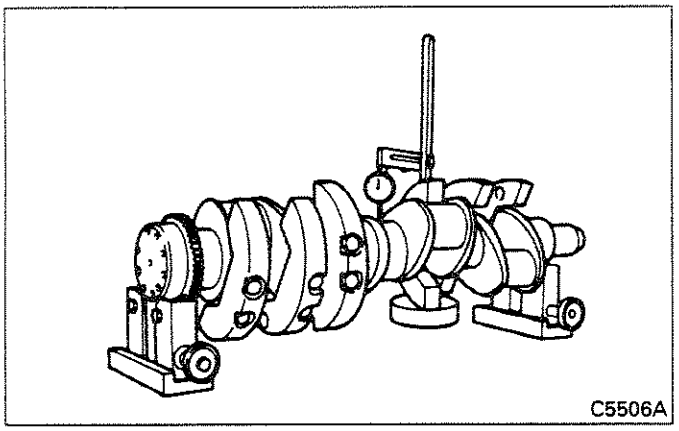

Measure the extent of bending in the crankshaft at the center journal. If the measurement exceeds the specified limit, grind to undersize or replace the crankshaft.

NOTE:

With the dial indicator applied to the center journal, turn the crankshaft through one revolution. One-half of the dial indicator reading represents the extent of bending.

(18)Grinding crankshaft to undersize

Any damaged or scorched journal or pin must be ground in accordance with the following instructions. If grinding is carried out, the main bearing must be replaced with an undersized one.

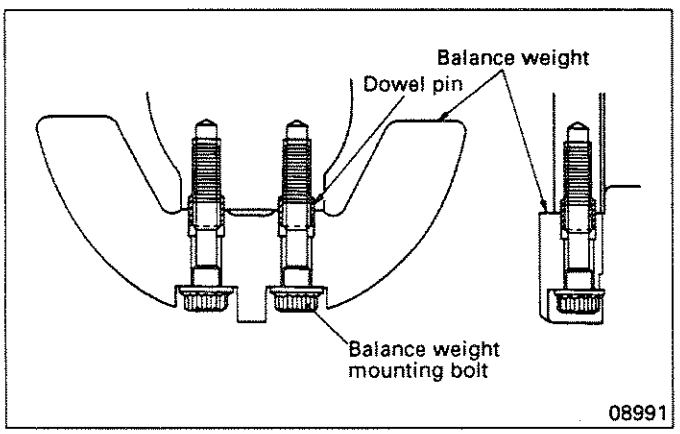

(a) Remove the balance weight(s) from the crankshaft as necessary. Take care not to damage the dowel pins when reinstalling them. Tighten the balance weight bolts to a torque of 98 N·m {10 kgf·m}, then turn them by a further $120^{\circ}\ ^{+10^{\circ}}_{0}$.

NOTE:

Before removing any balance weight, scribe a mating mark on it so that you can refit it in the original position.

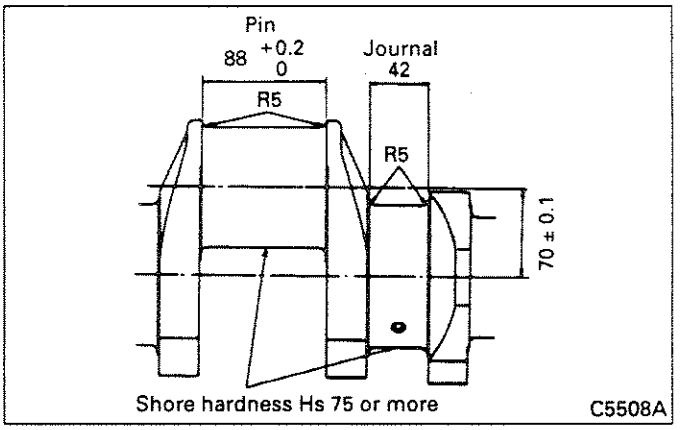

(b) Grind such that the center-to-center distance between the journal and pin does not change.
(c) Grind such that the width of the journal and pin does not change.
(d) Finish the corner fillet to the specified radius.
(e) Use a magnetic partick method to check for cracks caused by grinding. Also, check that the Shore hardness of the surface has not dropped below Hs 75.

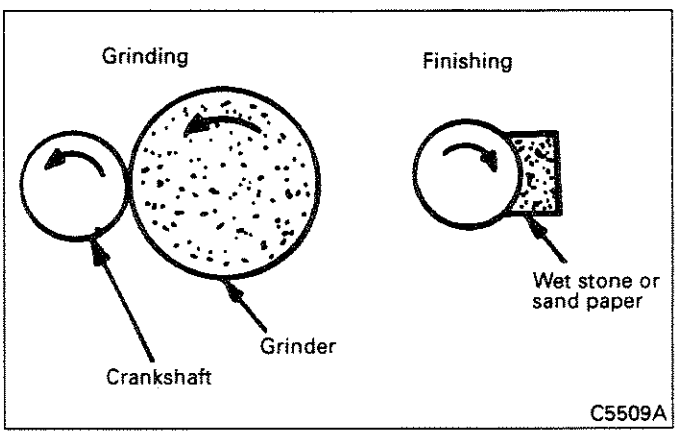

(f) When grinding, turn the crankshaft counter-clockwise as viewed from its front end. The grinder should rotate in the same direction.
(g) When finishing the crankshaft with sandpaper or a whetstone, turn the crankshaft clockwise.

Undersize	Finished journal diameter	Finished pin diameter	Roundness	Cylindricity
–0.25	99.75 $^{-0.08}_{-0.10}$	89.75 $^{-0.07}_{-0.09}$	0.01 or less	0.006 or less
–0.50	99.50 $^{-0.08}_{-0.10}$	89.50 $^{-0.07}_{-0.09}$		
–0.75	99.25 $^{-0.08}_{-0.10}$	89.25 $^{-0.07}_{-0.09}$		
–1.00	99.00 $^{-0.08}_{-0.10}$	89.00 $^{-0.07}_{-0.09}$		

5.4.3 Reassembly

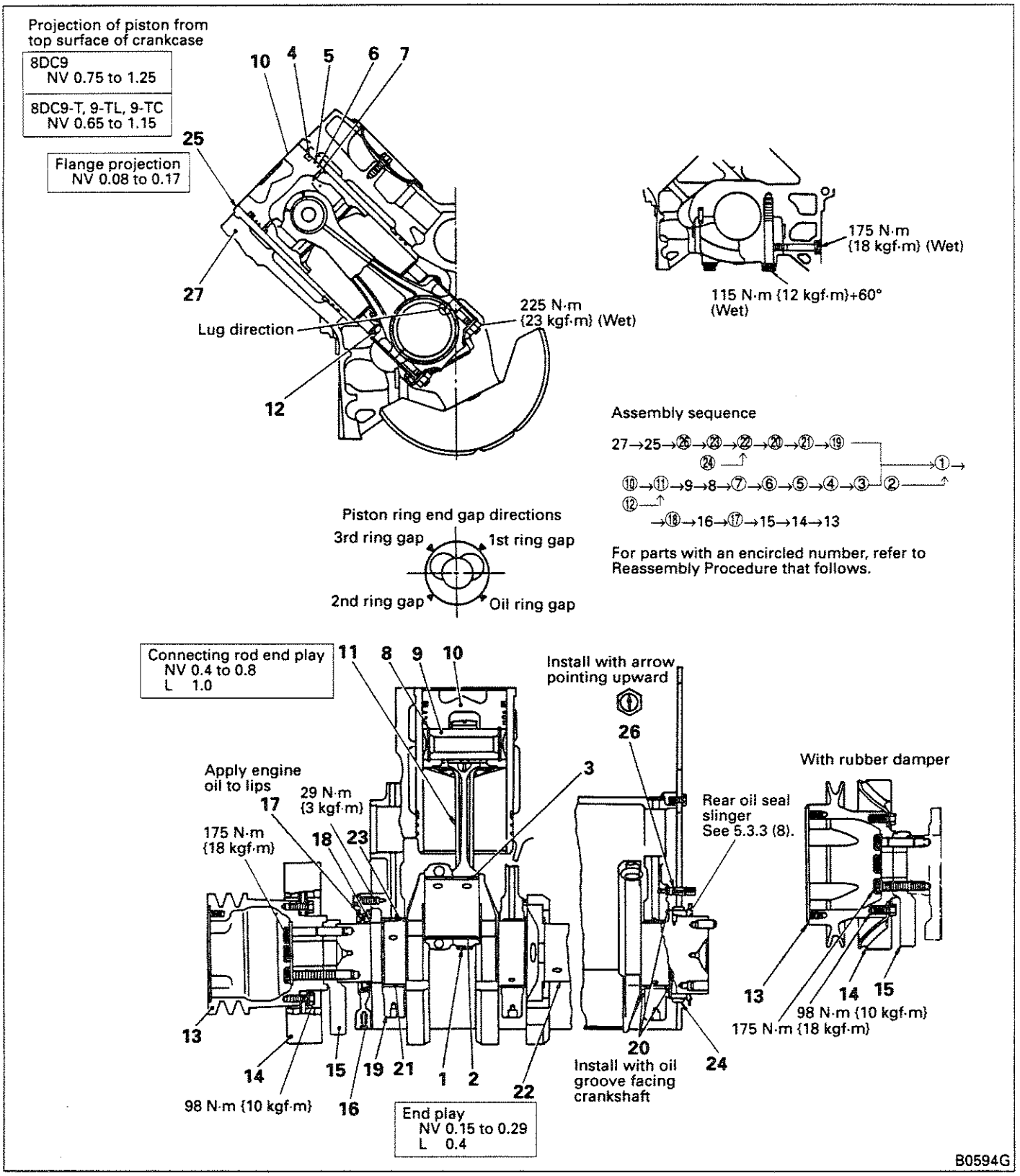

Reassembly Procedure

(1) Installing oil spray plug

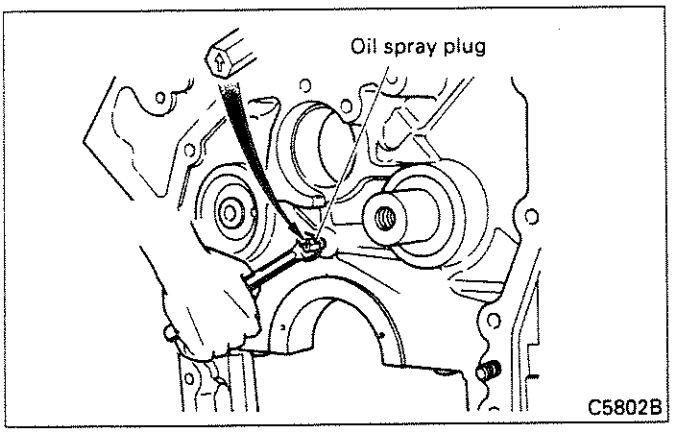

Install the oil spray plug such that the arrow stamped on it points toward the top of the engine.

(2) Installing upper main bearing and thrust plate

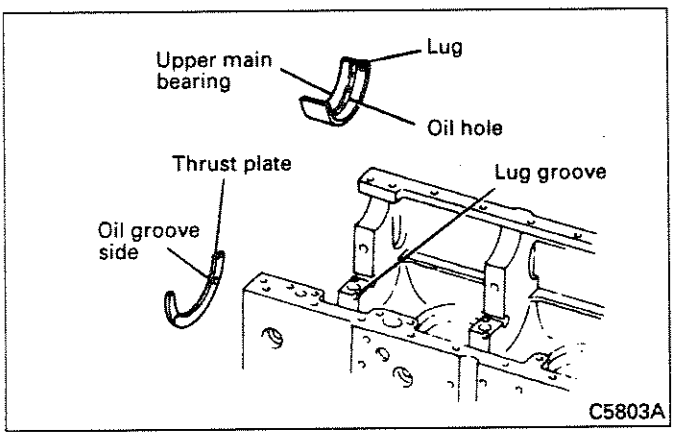

Install the upper main bearing such that the bearing lug fits in the lug groove on the crankcase. Install the rearmost thrust plate with its grooveless side facing the crankcase.

NOTE:

1. **The main bearing's upper half has an oil groove. The lower half does not have a groove. Take care not to confuse the upper and lower halves.**
2. **Oversize thrust plates are available in 3 sizes to adjust crankshaft end play [refer to item (7) of section 5.4.1 for details]. The oversize thrust plates available are +0.15 mm, +0.30 mm, and +0.45 mm. If any of these is used, ensure that the correct size thrust plates are fitted to the bearing caps. Refer to item (6) for details.**

(3) Installing crankshaft gear

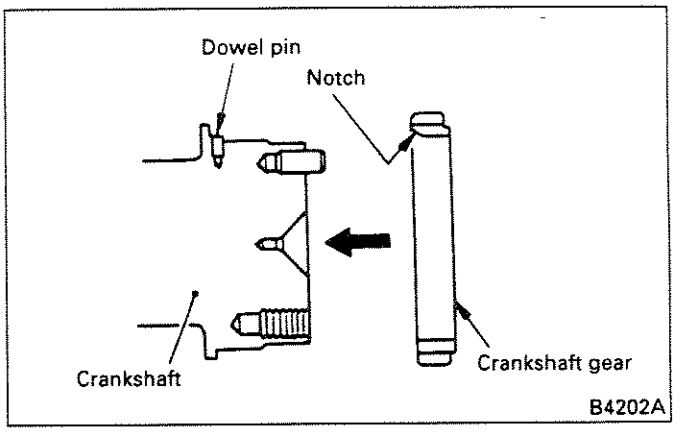

(a) Heat the gear to approximately 100°C using a piston heater.
(b) Locate the gear such that the dowel pin in the crankshaft fits into the notch in the gear. Fit the gear by lightly striking it with a soft hammer.
(c) Fit the rear oil seal slinger.

(4) Fitting front oil seal slinger

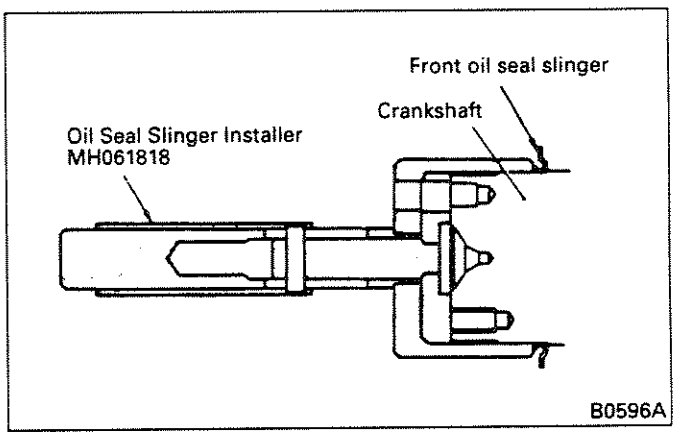

Press the front oil seal slinger into place using the Oil Seal Slinger Installer (special tool). Refer to item (7) of section 5.3.3 for details.

(5) Installing crankshaft

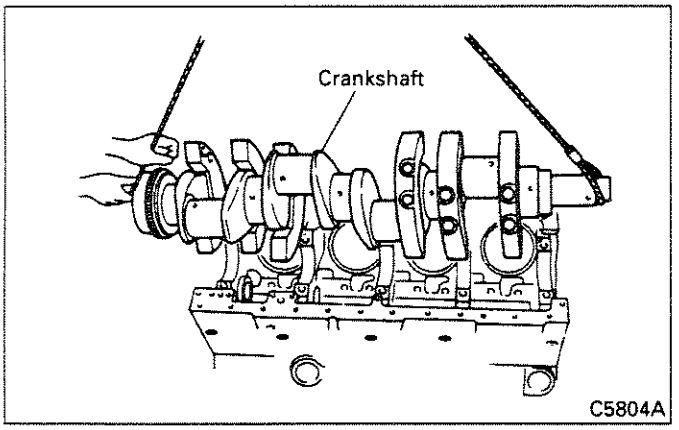

Lift the crankshaft with a hoist. Keeping it horizontal, gently lower it into the crankcase.

(6) Installing lower main bearings and main bearing caps

Install the parts as follows.

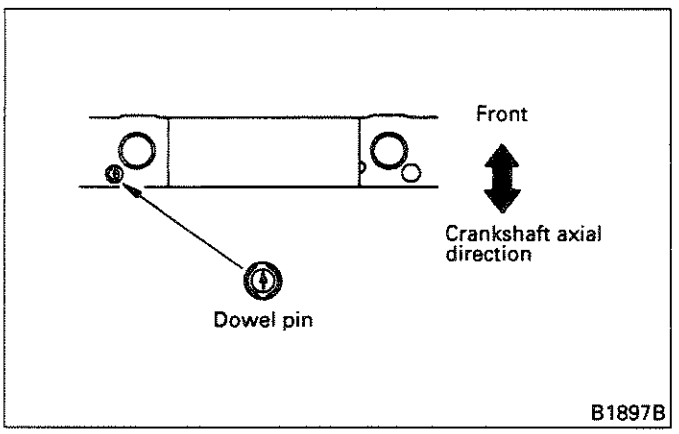

(a) Drive dowel locating pins into the rearmost main bearing cap in the direction shown in the diagram.

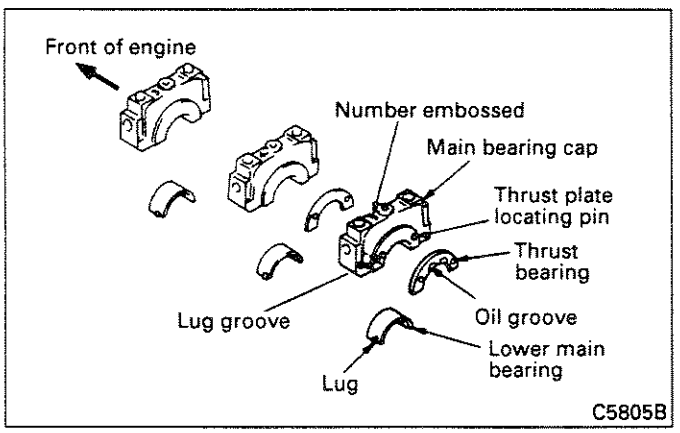

(b) Fit each lower main bearing into the relevant main bearing cap, ensuring that the lugs on the bearings are aligned with the lug grooves in the caps.

(c) Install a thrust plate on each side of the rearmost main bearing cap, ensuring that the grooveless sides of the thrust plates face toward the cap.

NOTE:

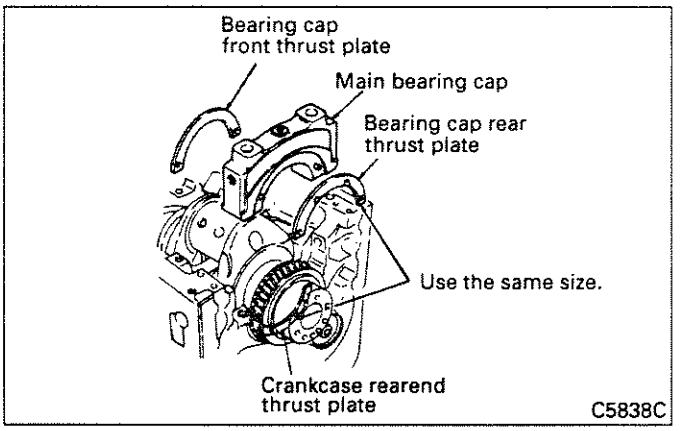

If oversize thrust plates are used, ensure that the bearing cap rear thrust plate and the rearmost thrust plate in the crankcase are the same size [refer to item (2) for details]. Note, however, that the bearing cap front and rear thrust plates may be of different sizes.

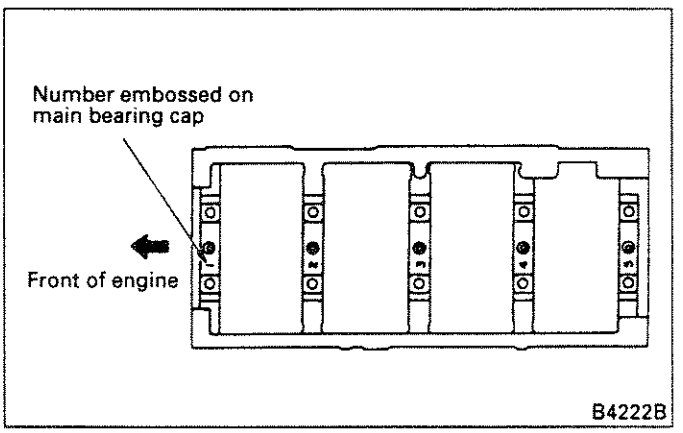

(d) Fit the main bearing caps in the order of the numbers that are embossed on them and such that the sides with lug grooves are toward the right of the engine.

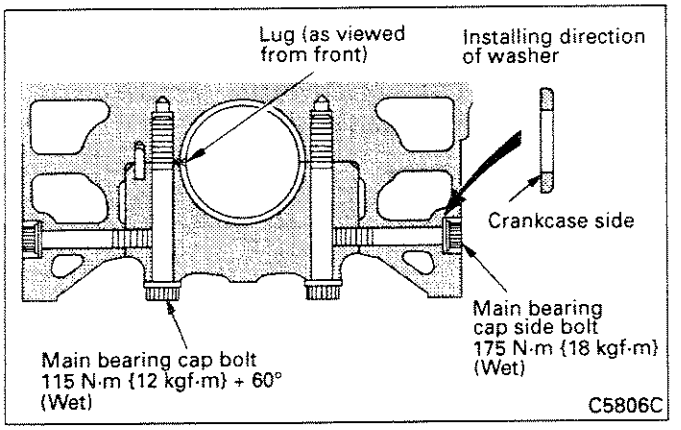

(e) Strike the bearing cap until it comes in contact with the crankcase and tighten its bolts to 115 N·m {12 kgf·m} (wet). After checking the tightening torque of each bolt, additionally tighten it as follows:

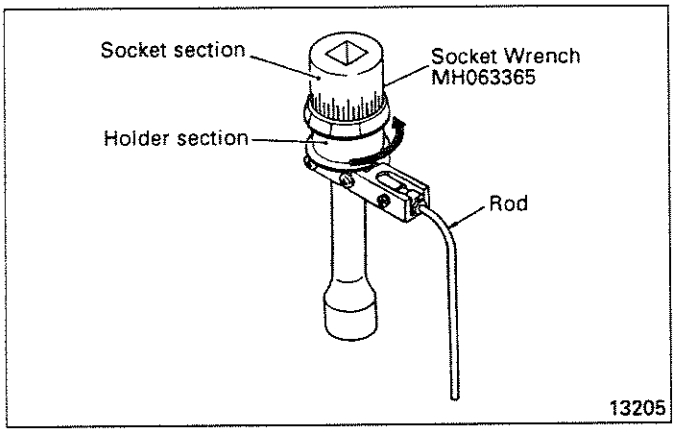

1) Turn the holder section of the Socket Wrench (special tool) counter-clockwise to give the inside spring a tension before fitting the tool on a main bearing cap bolt.

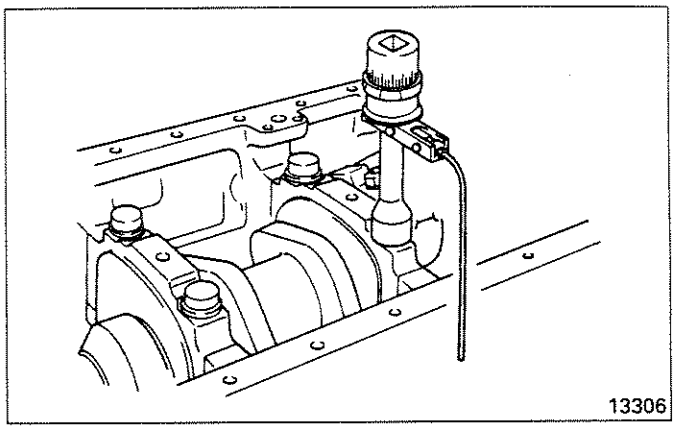

2) Fit the Socket Wrench on the main bearing cap bolt such that the tool's rod is held pressed against the crankcase flank by the inside spring force.

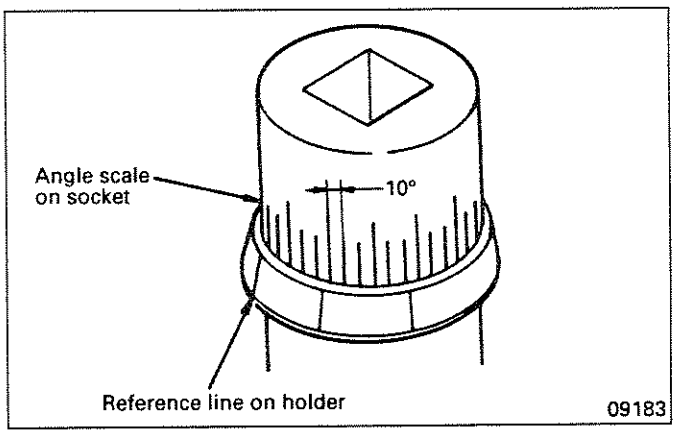

3) Using a line on the holder as reference, turn the socket clockwise through 60° (one graduation of the scale on the socket represent 10°) to additionally tighten the main bearing cap bolt.

4) After tightening both the main bearing cap bolts, tighten the main bearing side bolts to the specified torque.
After tightening the bolts, confirm that the crankshaft can still be rotated freely by hand.
Also, check that the crankshaft's end play is up to the indicated nominal value.
Refer to item (7) of section 5.4.1 for details.

(7) Installing connecting rod bolts

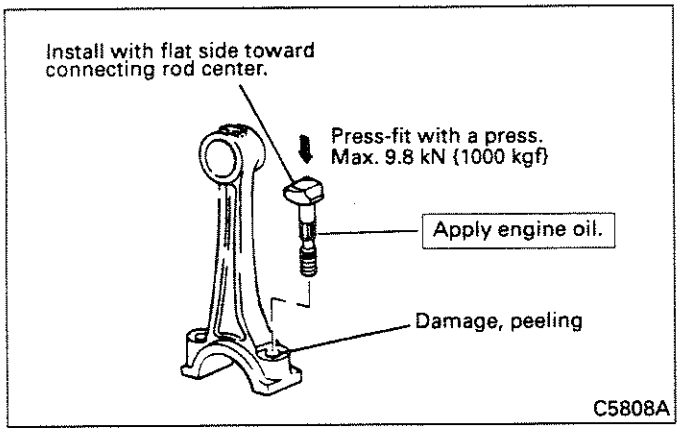

Check that there are no burrs or damage in the connecting rod's bolt holes. Apply engine oil to the connecting rod bolts, then press-fit the bolts such that the flat sides on their heads face inward.

(8) Reassembling piston and connecting rod

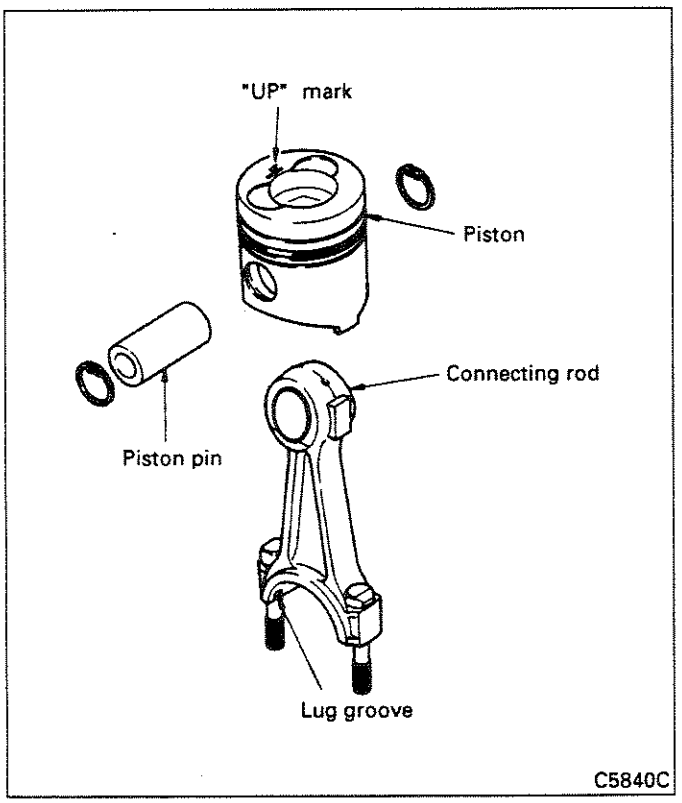

Connect the piston to the connecting rod with the piston pin such that the "UP" mark on the piston and the lug groove on the connecting rod are on the same side. If it is difficult to insert the piston pin, heat the piston in hot water or with a piston heater.

(9) Fitting piston rings

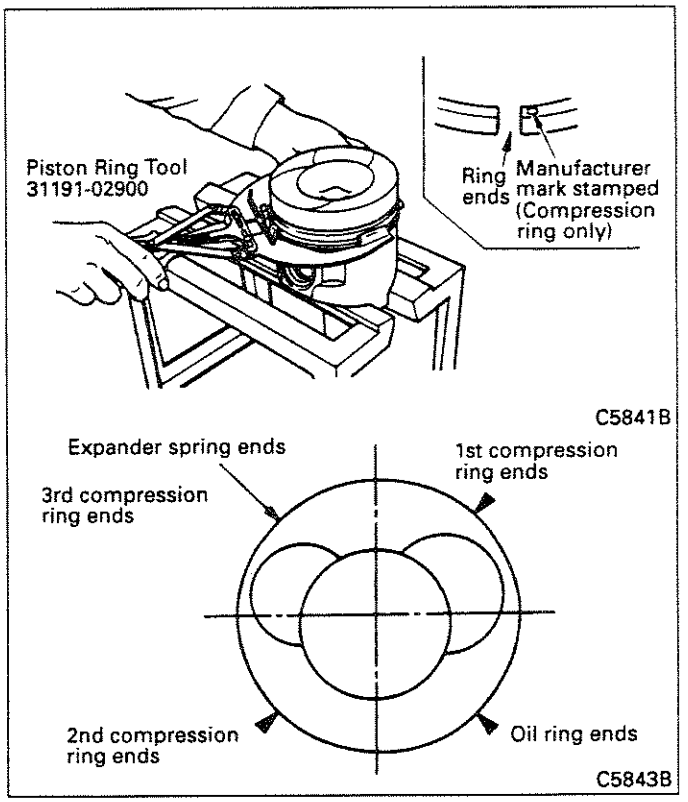

Using the Piston Ring Tool (special tool), fit the rings in the positions shown in the diagram. Ensure that the manufacturer's marks on the compression rings face upward. Fit the rings in the following order:

1. Oil ring
2. 3rd compression ring
3. 2nd compression ring
4. 1st compression ring

(10) Installing upper and lower connecting rod bearings

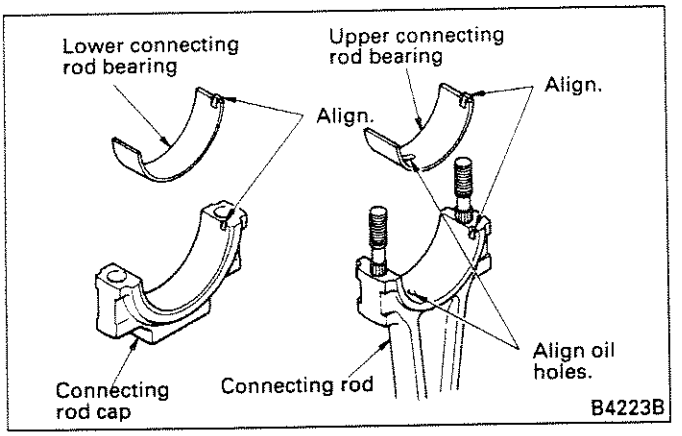

Install the upper connecting rod bearing such that its lug is aligned with the connecting rod's lug groove and such that the oil holes in the bearing and connecting hole are aligned with each other.
Install the lower connecting rod bearing such that its lug is aligned with the lug groove on the connecting rod cap.

NOTE:
The connecting rod bearing's upper half has an oil hole, and the lower half does not have a hole. Be aware also that different parts are used in the left and right banks of the engine.

(11) Installing piston and connecting rod

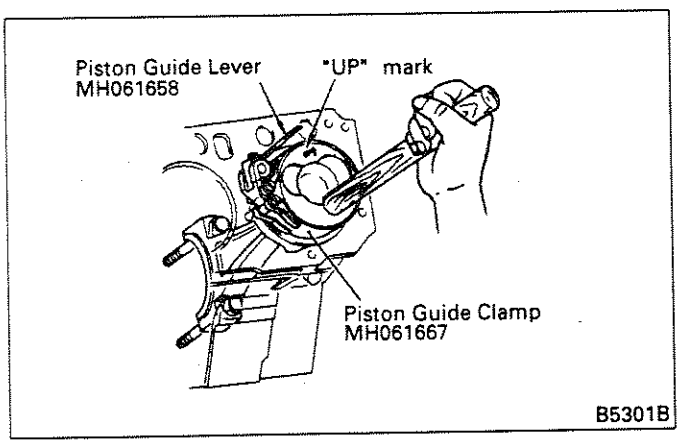

Using the Piston Guide Clamp and Piston Guide Lever (special tools), install the piston such that the "UP" mark on its crown faces toward the "V" of the engine.

NOTE:
1. **Different connecting rods are used in the left and right banks of the engine. Identification markings ("LH" and "RH") are embossed on the connecting rods to prevent erroneous installation.**
2. **Ensure that the size mark on the piston matches the size mark on the cylinder liner.**
3. **Ensure that the piston ring end gaps stay in their correct positions.**
4. **Slip some vinyl hose over the connecting rod bolts to prevent them from damaging the cylinder liner and crankshaft pin.**

<Using Piston Guide Clamp and Piston Guide Lever (special tools)>

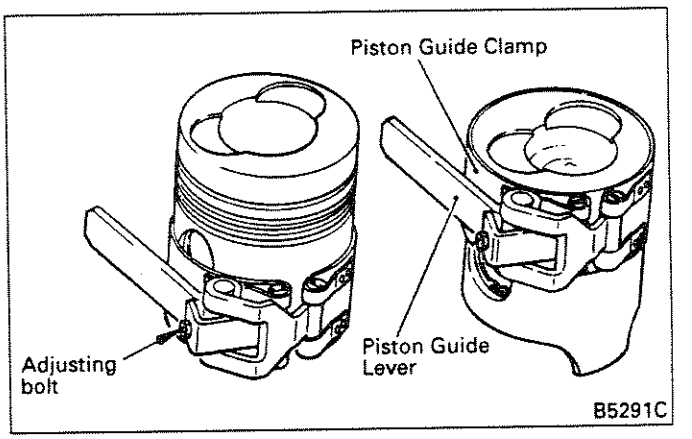

Align the Piston Guide with the piston skirt and set the lever in position. Turn the adjusting bolt such that the Clamp's internal diameter matches the piston's outside diameter. Next, remove the Guide from the piston and apply engine oil to the outside of the piston, to the inside of the Guide, and to the inside of the cylinder liner. Fit the Guide back onto the piston such that it is flush with the piston's crown. Using a wooden mallet or block, tap the piston into position, taking care not to damage it.

(12)Fitting connecting rod caps

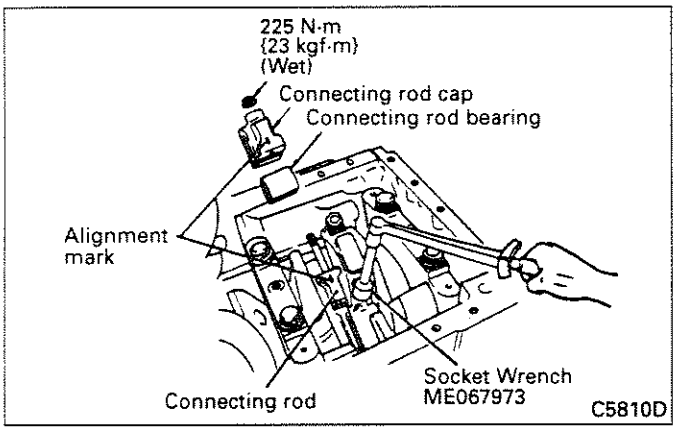

Fit the connecting rod cap such that its alignment mark meets the alignment mark on the connecting rod. Using the Socket Wrench (special tool), tighten the nuts to the specified torque.

(13)Check the connecting rod's end play. Refer to item (2) of section 5.4.1 for details.

(14)Check that the pistons project by the specified amount. Refer to item (1) of section 5.4.1 for details.

(15)Fitting front oil seal

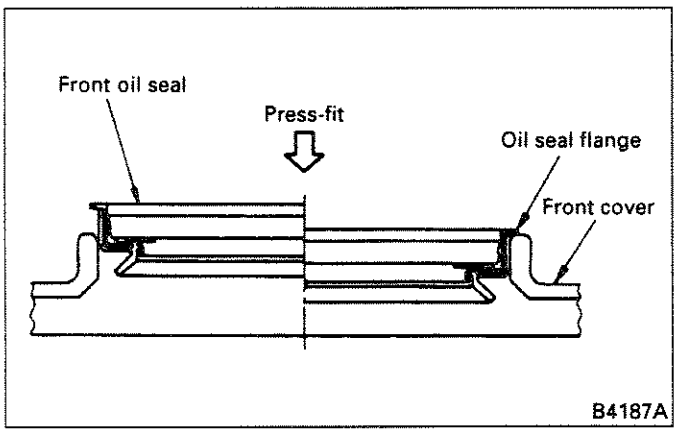

Press the oil seal evenly around its entire periphery until its flange fits tightly against the front cover.

5.5 Inspecting and Adjusting Valve Clearances

Valve clearances should be checked and adjusted when the engine is cold.

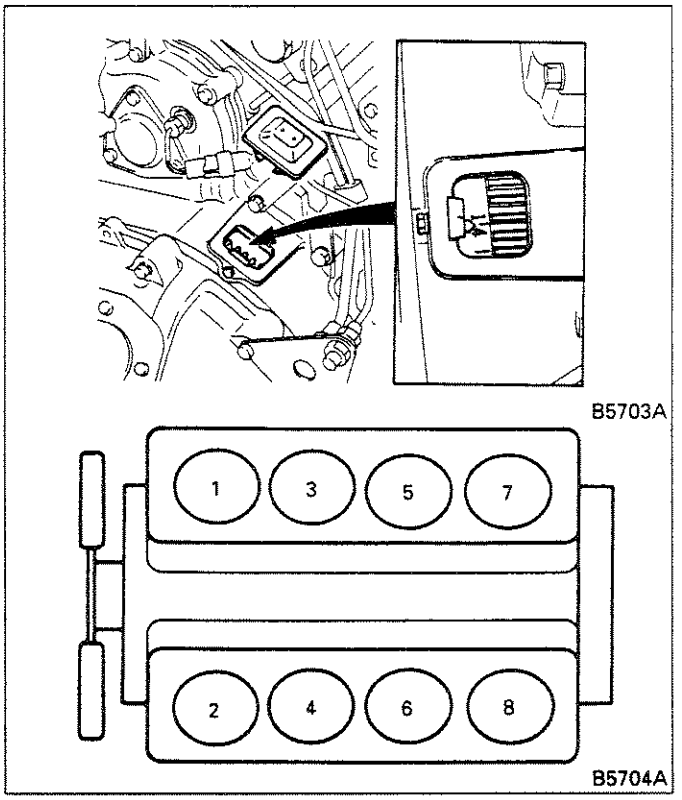

(1) Crank the engine until the No. 1 or No. 4 piston is at top dead center on compression stroke.

(2) Confirm that the pointer in the flywheel housing inspection window is aligned with the "1,4" mark on the flywheel.

(3) If the No. 1 piston is at top dead center, check and adjust the clearances of the valves marked ○ in the table below. If the No. 4 piston is at top dead center, check and adjust the clearances of the valves marked ×. Be sure to check and adjust every valve.

Cylinder No.	1		2		3		4		5		6		7		8	
Valve	In.	Ex.	Ex.	In.	In.	Ex.	Ex.	In.	In.	Ex.	Ex.	In.	In.	Ex.	Ex.	In.
No. 1 piston at TDC	○	○	○			○			○			○		○		○
No. 4 piston at TDC				×	×		×	×		×	×		×		×	

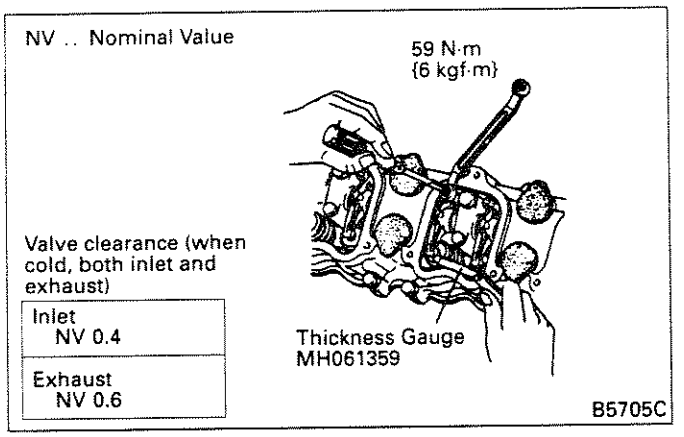

(4) Using the Thickness Gauge (special tool), check that the clearance between the rocker arm and valve cap is in line with specifications. To check the clearance, insert a gauge of the same thickness as the nominally acceptable clearance between the rocker arm and valve cap. The gauge should be able to move in the gap, albeit not loosely.
If the clearance is incorrect, loosen the lock nut and turn the adjusting screw as required.
When the clearance is correct, tighten the lock nut to secure the adjusting screw.

NOTE:
After tightening the lock nut, confirm that the clearance is still correct.

6. TROUBLESHOOTING

Symptom	Probable cause	Remedy	Reference
Engine will not start	Incorrect oil viscosity	Replace	Group 12
	Incorrect/defective fuel		Group 13
	Low compression pressure • Incorrect valve clearance	Adjust	
	• Defective head gasket	Replace	
	• Worn valve and valve seat/carbon deposits		
	• Weakened valve spring		
	• Worn/damaged piston ring(s)		
	• Worn/damaged piston ring groove(s)		
	• Worn piston(s)/cylinder liner(s)	Change to oversize	
	Defective preheater • Defective starter switch	Repair or replace	Group 16
	• Defective heater relay		
	Incorrect injection timing	Adjust	Group 13
	Insufficient fuel injection volume • Defective injection pump	Repair or replace	Group 13
	• Incorrect fuel injection volume		
	Defective cooling system	Repair or replace	Group 14
Rough idling	Incorrect oil viscosity	Replace	Group 12
	Incorrect/defective fuel		Group 13
	Defective cooling system	Repair or replace	Group 14
	Low compression pressure (see "Engine will not start")		
	Incorrect injection timing	Adjust	Group 13
	Defective fuel system • Defective injection pump	Repair or replace	Group 13
	• Defective injection nozzle		
	• Air trapped in fuel system		
Abnormal exhaust gas color	Incorrect/defective fuel	Replace	Group 13
	Cooling system malfunctioning	Repair or replace	Group 14
	Intake/exhaust system malfunctioning • Clogged air cleaner	Repair or replace	Group 15
	• Clogged muffler		
	• Oil leaking into intake/exhaust pipes		
	Low compression pressure (see "Engine will not start")		
	Defective fuel system • Malfunctioning injection pump	Repair or replace	Group 13
	• Defective injection nozzle		
	Incorrect injection timing	Adjust	
	Excessive engine oil	Adjust	Group 12
	Seizure of major moving parts	Repair or replace	

Symptom	Probable cause	Remedy	Reference
Low power output	Incorrect oil viscosity	Replace	Group 12
	Incorrect/defective fuel		Group 13
	Cooling system malfunctioning	Repair or replace	Group 14
	Intake/exhaust system malfunctioning • Clogged air cleaner	Repair or replace	Group 15
	• Clogged muffler		
	Low compression pressure (see "Engine will not start")		
	Fuel system malfunctioning • Malfunctioning injection pump	Repair or replace	Group 13
	• Defective injection nozzle		
	• Air trapped in fuel system		
	Incorrect injection timing	Adjust	
Excessive oil consumption	Oil leaking from lubrication system	Inspect and/or repair	Group 12
	Oil leaking from engine and related parts • Defective gasket/oil seal	Replace	
	Oil entering combustion chamber past piston • Worn cylinder liner(s)/piston(s)	Rectify or replace	
	• Piston ring(s) worn, damaged, or seized	Replace whole set	
	• Clogged piston/oil ring oil hole(s)	Clean	
	Oil entering combustion chamber via valves • Worn valve stem(s)/valve guide(s)	Replace	
	• Worn valve stem seal(s)		
Abnormal engine noise	Noise emanating from outside parts of engine • Loose piping/hose connection(s)	Inspect	
	• Injection pump, alternator, other auxiliary unit(s) incorrectly mounted	Inspect and/or adjust	Groups 13 and 16
	• Loose/damaged V-belt	Replace	Group 14
	• Incorrectly mounted crankshaft pulley	Inspect and/or adjust	
	• Malfunctioning air cleaner and/or muffler	Repair or replace	Group 15
	• Turbocharger malfunctioning	Inspect/rectify	
	Noise emanating from vicinity of rocker cover • Incorrect valve clearance(s)	Adjust	
	• Defective valve spring(s)	Replace	
	• Defective rocker shaft/bracket	Inspect and/or repair	
	• Improper lubrication of rocker shaft	Inspect	
	• Worn, damaged, or carbon-deposited valve/valve seat	Replace	

Symptom	Probable cause	Remedy	Reference
Abnormal engine noise	Noise emanating from vicinity of flywheel housing • Incorrect timing gear backlash	Replace	
	• Incorrect lubrication of timing gears and idler shaft	Inspect	
	Noise emanating from cylinder head/crankcase • Low compression pressure (see "Engine will not start")		
	• Incorrect injection timing	Adjust	Group 13
	• Incorrect spray of injection nozzles	Repair or replace	
	• Worn connecting rod small end bushing(s) and piston pin(s)	Replace	
	• Worn crankshaft pin(s) and connecting rod big end bearing(s)		
	• Worn/damaged crankshaft journal(s) and main bearing(s)		
	• Excessive crankshaft/camshaft end play	Replace thrust plate(s)	
	• Worn tappet(s)/camshaft	Replace worn part(s)	
	• Worn/damaged piston ring(s)	Replace	
	• Worn/damaged piston ring groove(s)		

LUBRICATION

CONTENTS

1. GENERAL 2
2. SPECIFICATIONS 15
3. SERVICE STANDARDS 16
3.1 Service Standards Table 16
3.2 Tightening Torque Table 17
4. SERVICE PROCEDURE 18
4.1 Oil Pump 19
4.1.1 Removal and installation 19
4.1.2 Disassembly and inspection 21
4.1.3 Reassembly 26
4.2 Oil Filter and Oil Cooler 28
4.2.1 Removal and installation 28
4.2.2 Oil filter 29
4.2.3 Oil cooler 31
4.3 Regulator Valve 32
5. TROUBLESHOOTING 33

1. GENERAL

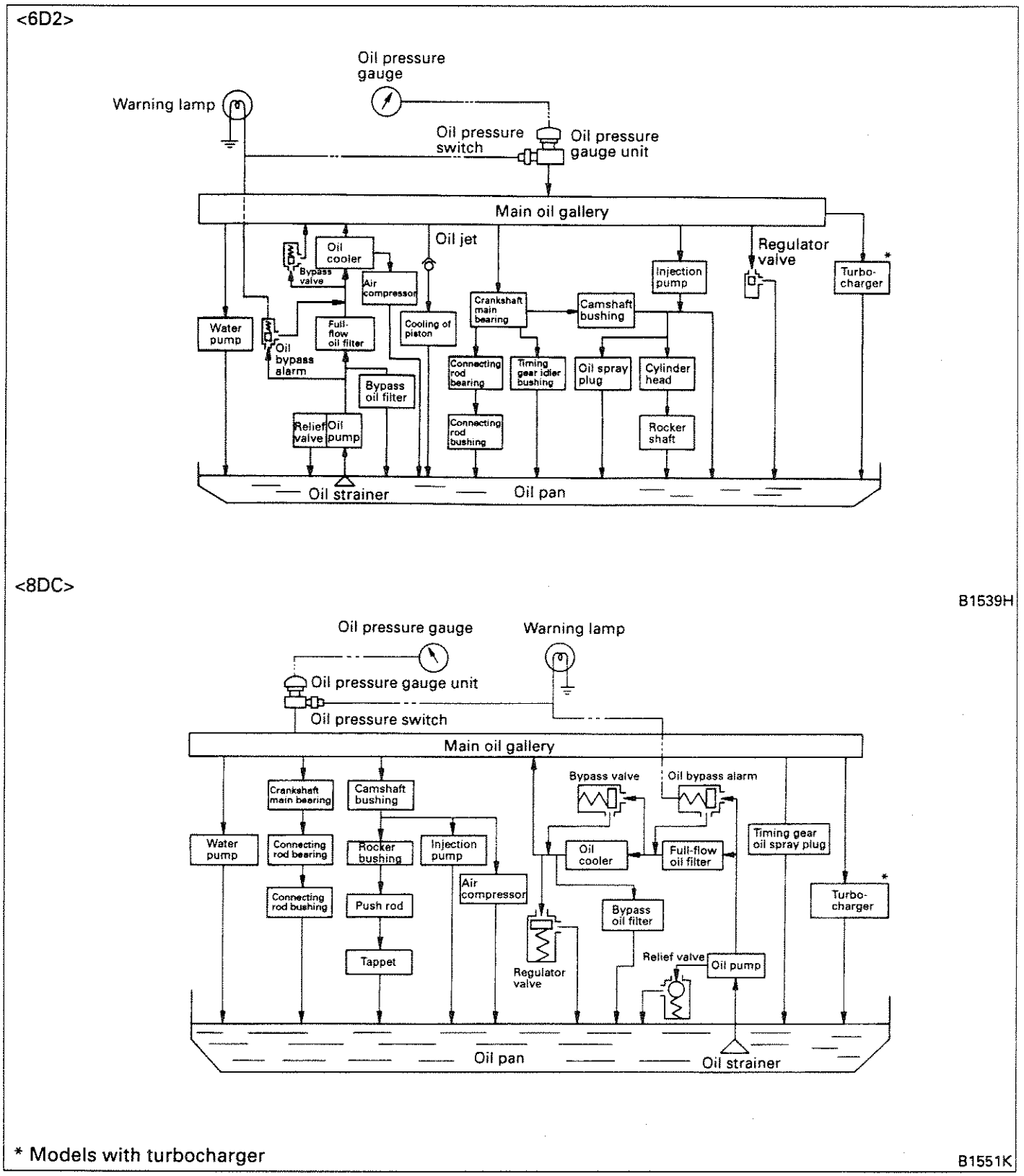

Engine lubrication is accomplished by forced lubrication system using gear pump. The engine oil in the oil pan is drawn up through the oil strainer by the oil pump and force-fed to the oil filter and oil cooler to lubricate all parts.

(1) Oil pump

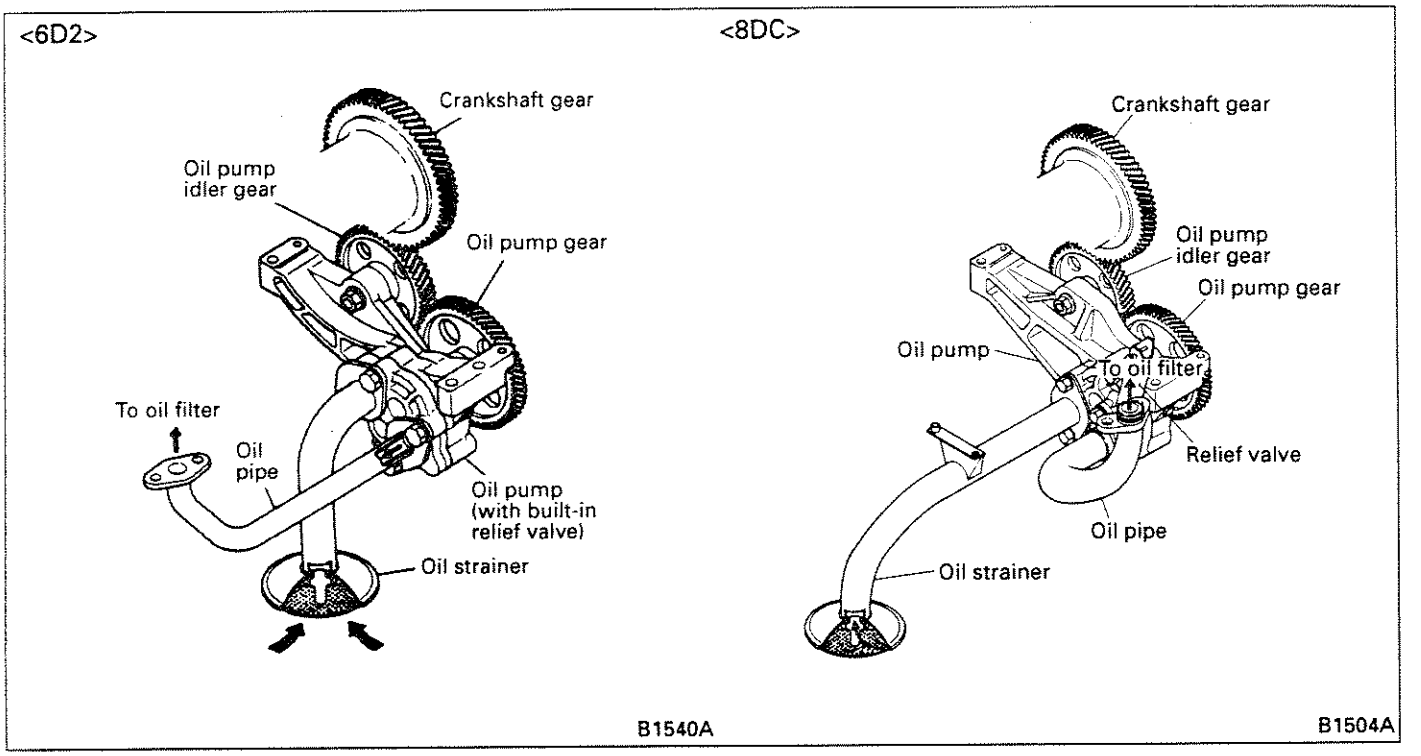

The oil pump, of a gear pump type, is mounted in the rear bottom portion of the crankcase, driven by the crankshaft gear.
The oil strainer at the suction port prevents entry of foreign matter in the oil pan and air. The engine oil is routed to the crankcase by the oil pipe connected to the delivery port.

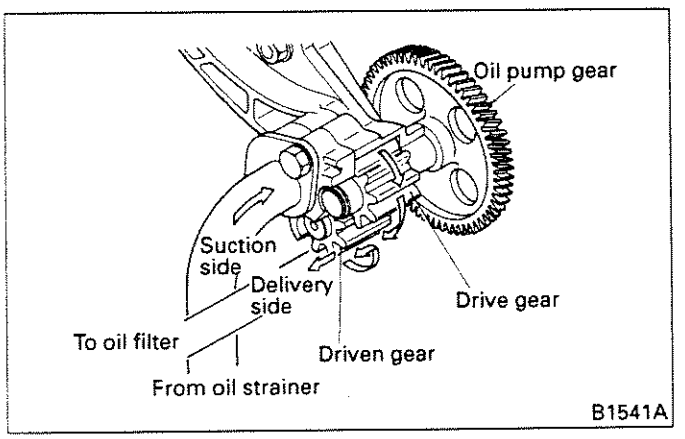

The crankshaft gear drives the oil pump idler gear and oil pump gear to transmit rotation to the oil pump drive gear.

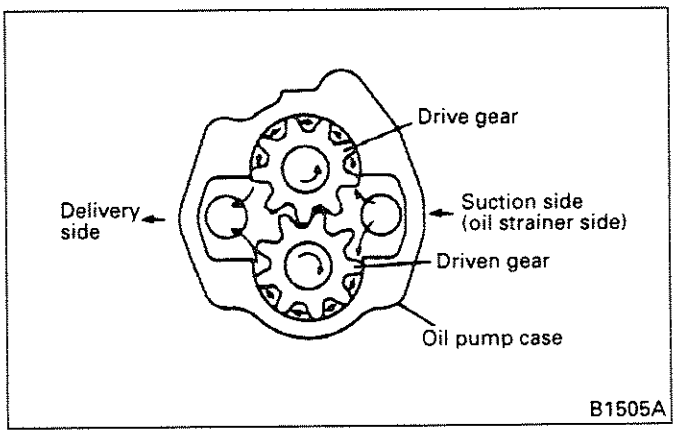

Inside the oil pump case, there are oil pump drive gear and driven gear which are in mesh with each other. When the drive gear is driven, the driven gear is caused to turn in an opposite direction.
As the gears rotate with the gear teeth sliding on the inner surfaces of pump case, the resultant negative pressure causes the engine oil to enter the oil pump and the oil trapped in the space formed by the teeth and gear case inner wall is forced out through the delivery port.

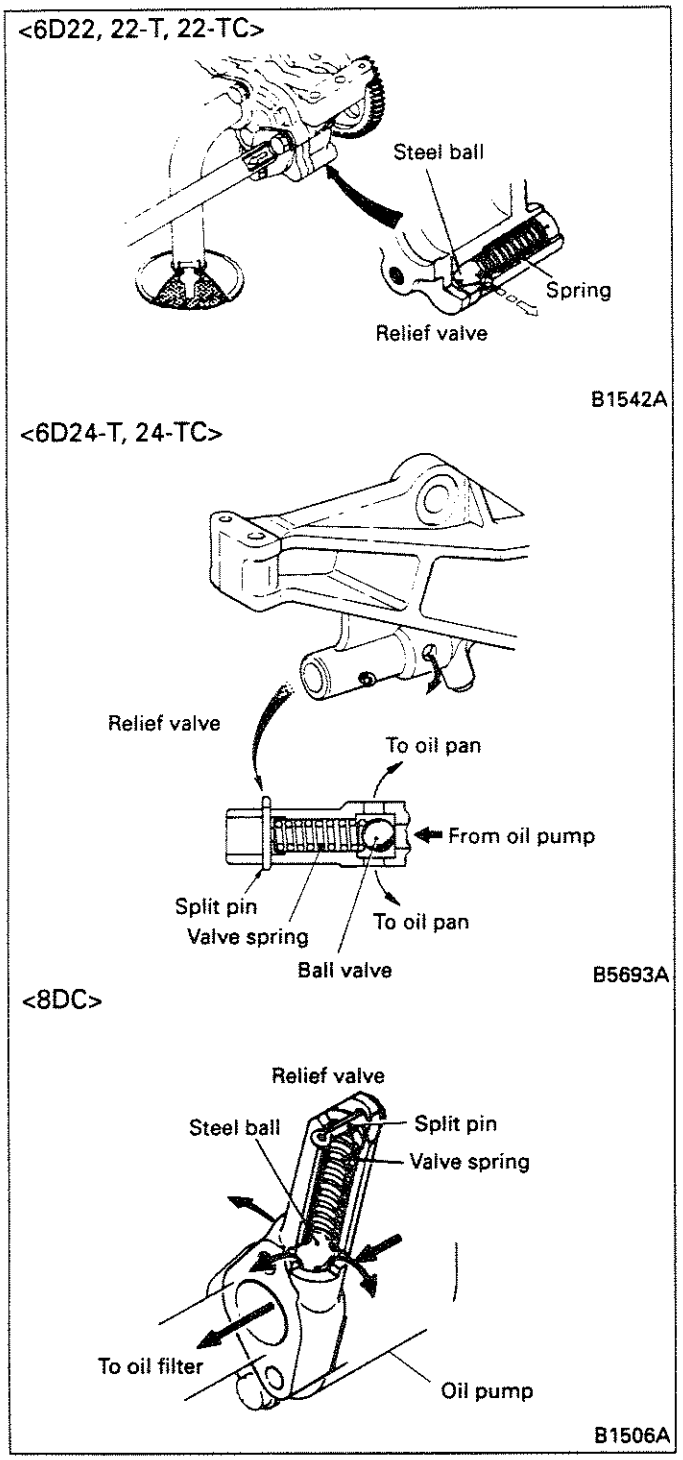

The oil pump is driven at a speed proportionate to the engine speed. Therefore, it is provided with a relief valve that prevents excessive pressure from being applied to the lubrication system when the engine is started in cold weather involving a surge in oil pump delivery pressure.

(2) Oil filter

(a) 6D2

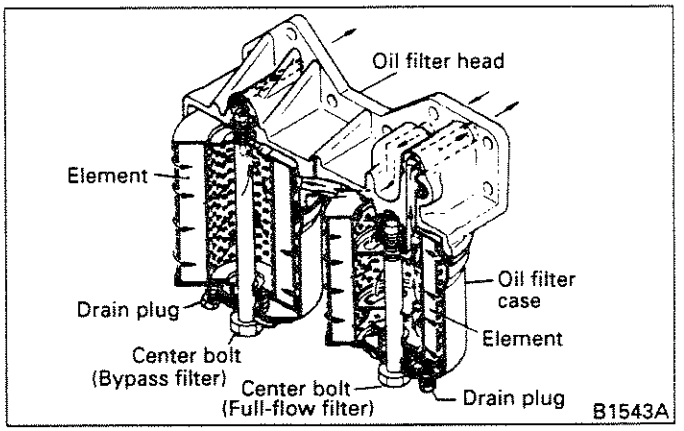

The oil filter assembly consists of a full-flow filter and a bypass filter. Paper elements are used.
Engine oil fed under pressure from the oil pump passes through the oil hole in the crankcase and enters the full-flow and bypass filters via the oil filter head. Engine oil that passes through the full-flow filter is routed from the oil filter head to the oil cooler via the crankcase oil hole. Engine oil that passes through the bypass filter returns to the oil pan.

(b) 8DC

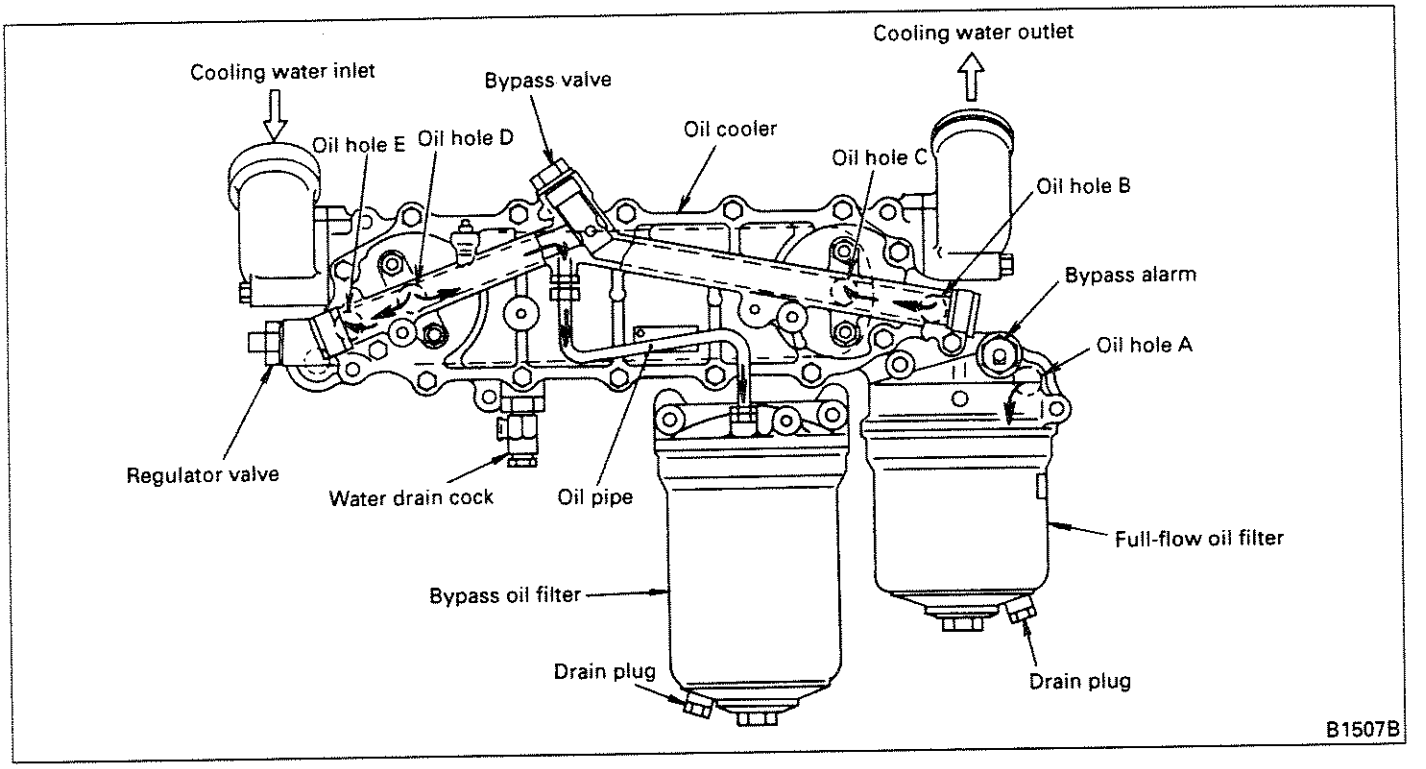

The oil cooler and full-flow oil filter are constructed as an integral unit and the bypass oil filter is connected by an oil pipe to oil cooler to keep oil in good condition.

Oil hole A ..... From crankcase oil passage to inside full-flow oil filter

Oil hole B ..... From full-flow oil filter to oil cooler cover oil passage

Oil hole C ..... From oil cooler cover oil passage to oil cooler element

Oil hole D ..... From oil cooler element to oil cooler cover oil passage

Oil hole E ..... From oil cooler cover oil passage to crankcase main gallery

1) Full-flow oil filter

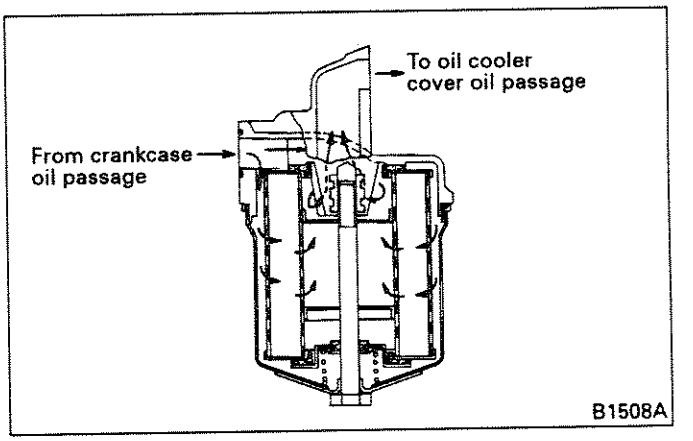

The oil filter element is filter paper element. Oil supplied by the oil pump is fed into the oil filter through the crankcase oil passage. Then, oil filtered by element is fed into the oil passage of the oil cooler cover.

2) Bypass oil filter

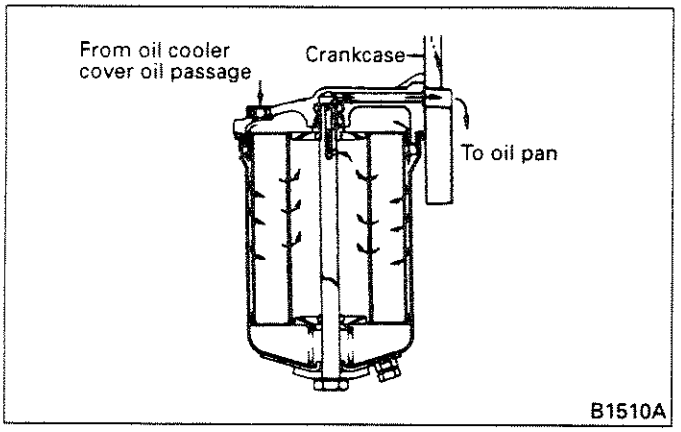

The oil filter element is a filter paper. This unit serves to keep oil in good condition through circulation of a part of the oil from the oil pan to the full-flow oil filter, oil cooler, bypass oil filter and then to oil pan.

(c) Oil bypass alarm

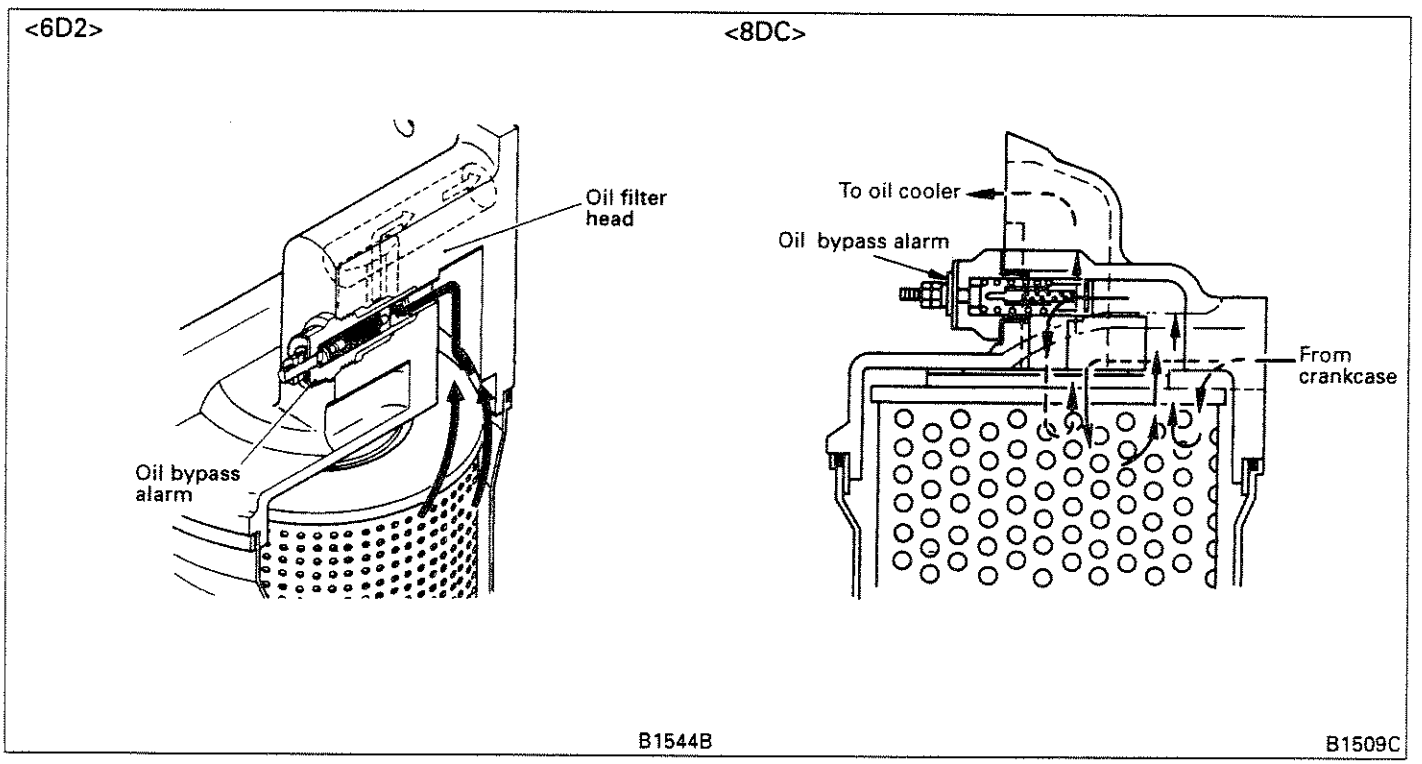

When the oil filter element is plugged resulting in the difference in pressures between before and after the element exceeding a predetermined level, the valve overcomes the spring tension to move. As a result, unfiltered oil flows directly to the oil cooler.
The oil bypass alarm has electric contacts that are closed to turn on the pilot lamp, warning the driver of clogged element when the valve is opened.

(3) Oil cooler

(a) 6D2

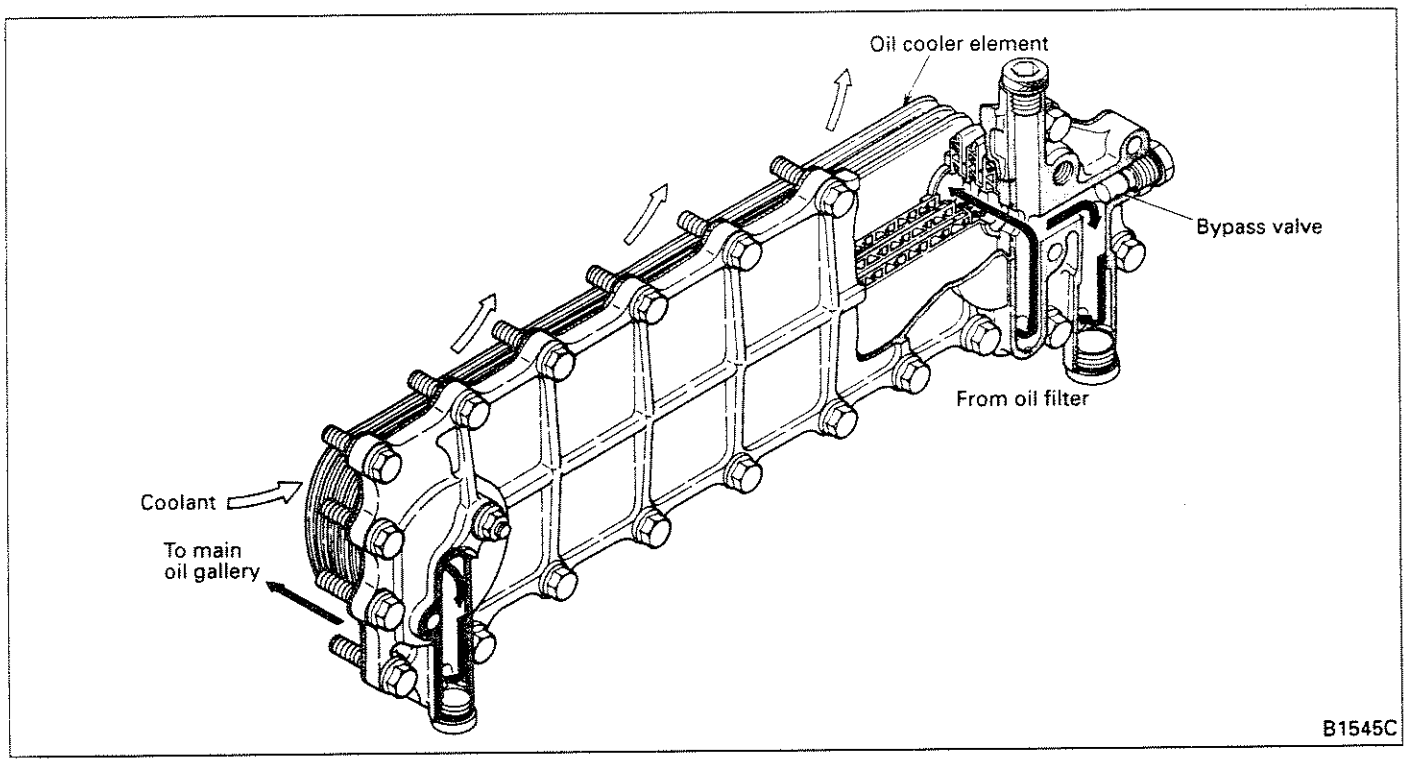

The oil cooler is of the shell-and-plate (multi-plate) type. It is mounted in the coolant path on the left of the crankcase.
Engine oil that has been forced through the oil filter flows through the inside of the oil cooler element. At the same time, coolant from the water pump flows around the outside of the element. The engine oil in the element is thus cooled or heated before flowing to the main oil gallery.

Bypass valve

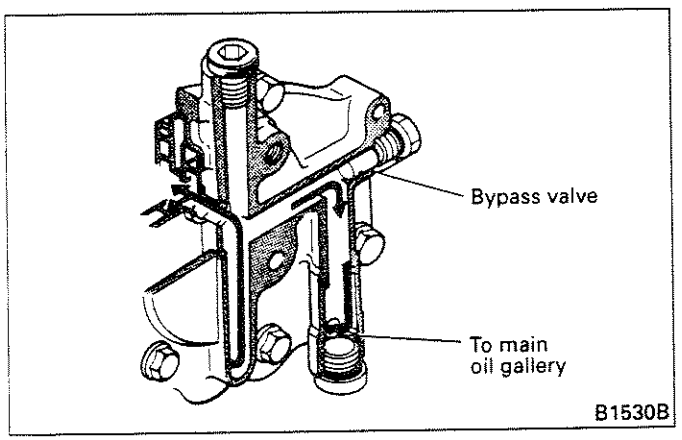

When the oil's viscosity is high at low temperatures or when the element is clogged and resists the oil's flow, the oil cooler's bypass valve opens, thus allowing oil to flow to the main gallery without passing through the cooler.

Regulator valve

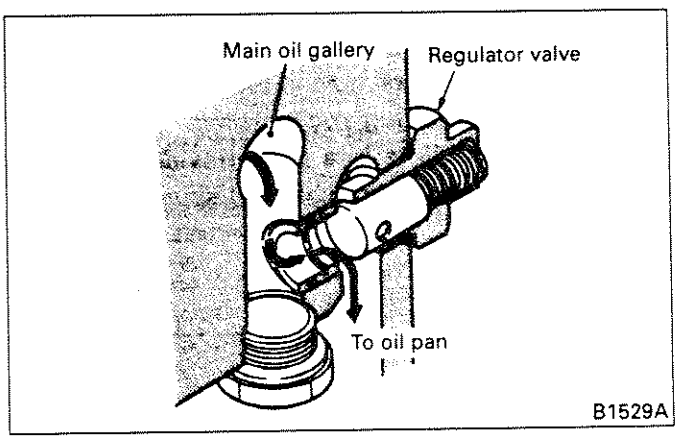

The regulator valve is fitted to the main oil gallery in the crankcase. If the oil pressure in the main gallery exceeds a specified level, the regulator valve allows the oil to escape to the oil pan, thereby protecting the lubrication system from excessive pressure.

(b) 8DC

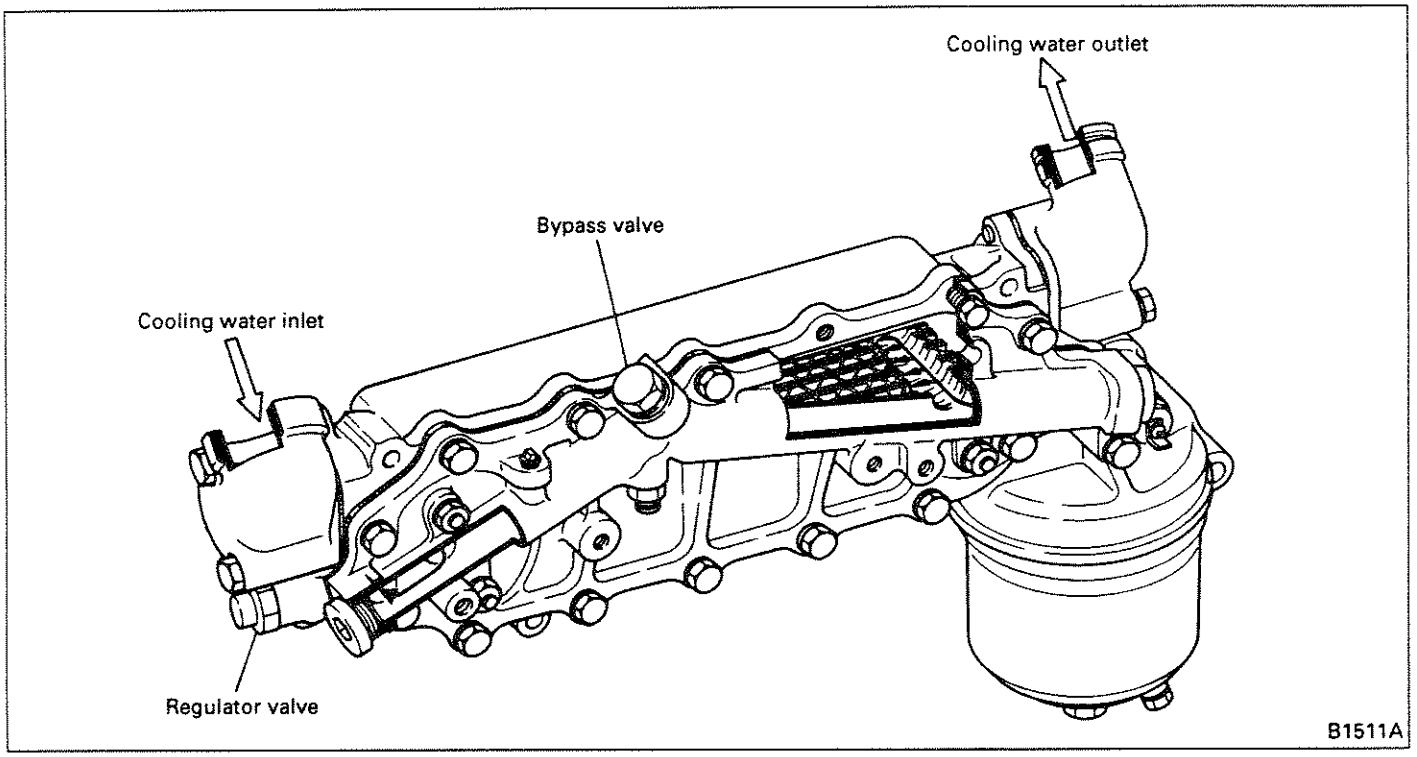

The oil cooler is of the shell and plate type (multi-plate type) and introduces coolant from the crankcase water jacket by means of a water pipe.
Engine oil that has been forced through the oil filter flows through the inside of the oil cooler element. At the same time, coolant from the water pump flows around the outside of the element. The engine oil in the element is thus cooled or heated before flowing to the main oil gallery. A bypass valve and a regulator valve are fitted in the oil cooler cover's oil passage.

Bypass valve

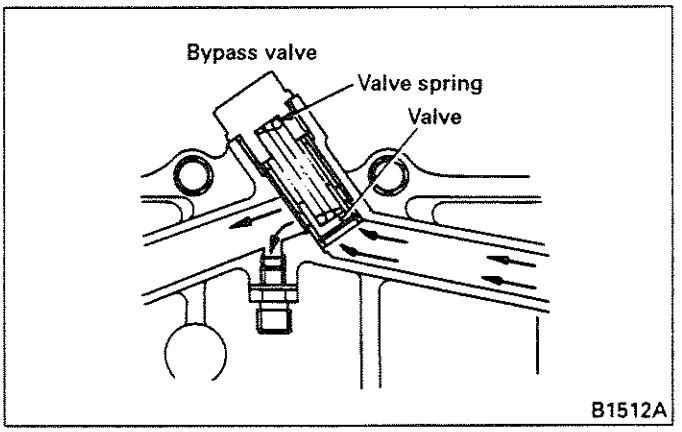

When the oil viscosity is high because of a low oil temperature or when the flow resistance is high because of a clogged element, the bypass valve opens, allowing the oil to flow into the crankcase main gallery without heat exchange.
For details of the regulator valve, refer to the corresponding section in item (a) 6D2.

(4) Lubrication of components

(a) 6D2

Engine oil routed to the main oil gallery lubricates the engine's various components as follows:

1) Main bearings, connecting rod bearings, and connecting rod bushings

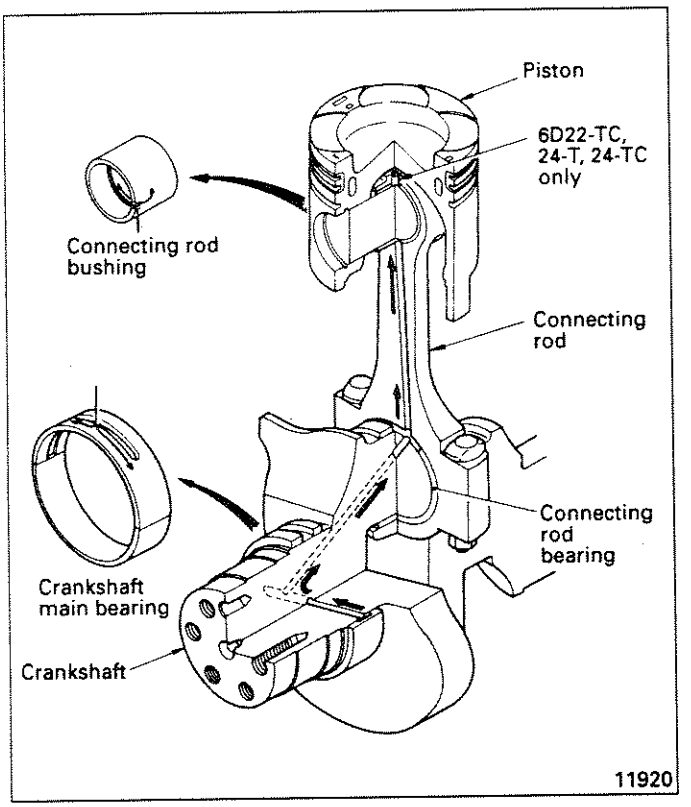

An oil passage extends from the main oil gallery to the crankshaft main bearing and lubricates the main bearing. Part of the oil that has lubricated the main bearing passes through the hole in the crankshaft and lubricates the connecting rod bearing. It then goes through an oilway inside the connecting rod and lubricates the connecting rod small end bushing.
In the 6D22-TC, 24-T and 24-TC, there is also an oil hole in the top of the connecting rod. Oil spurts out of this hole onto the inside of the piston.

2) Camshaft

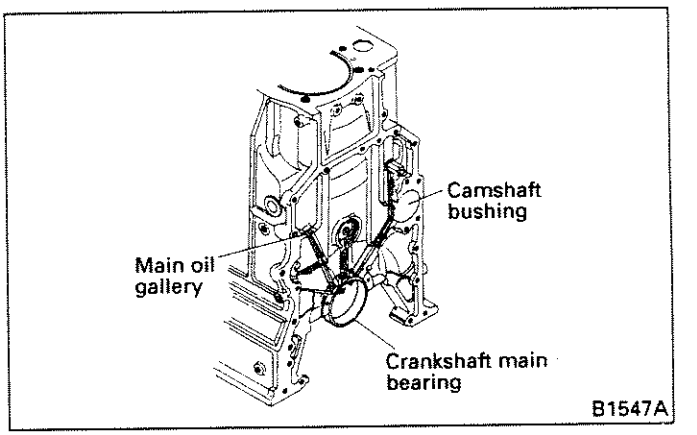

The camshaft bushings are lubricated via the crankcase oil holes that extend to them from the periphery of the crankshaft main bearings.

3) Valve mechanism

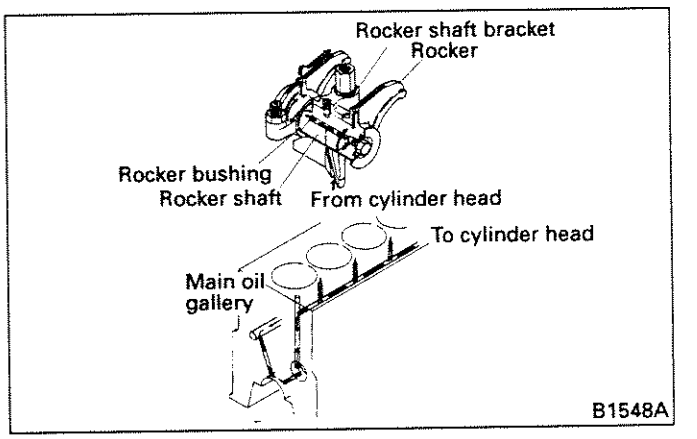

Engine oil that has lubricated the No. 7 camshaft bushing flows to the cylinder heads via an oilway and holes in the top of the crankcase. Engine oil that is bound for the cylinder heads flows through oil holes in the rocker shafts and lubricates the rocker bushings. It then spurts out of a hole in the top of each rocker to lubricate the sliding surfaces of the valve caps, the valve stems, and the contact points of the valve stems, push rods, and adjusting screws. The oil then flows through the push rod holes in the cylinder head and crankcase to lubricate the tappets and camshaft cams. Finally, the oil returns to the oil pan.

4) Timing gears

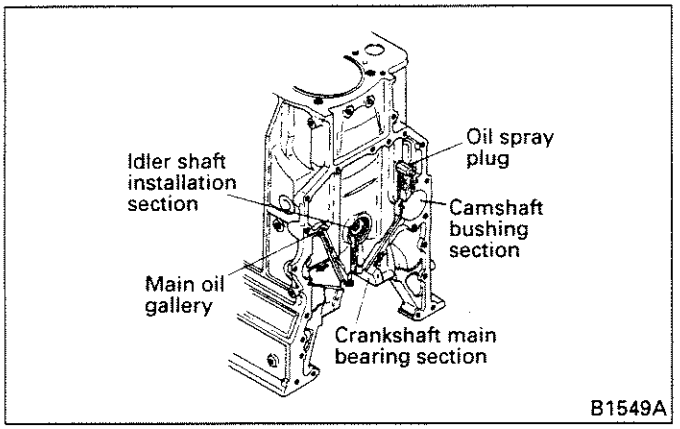

As shown in the illustration, the timing gear idler shaft bushings are lubricated via oil holes that extend from the main oil gallery and from the rearmost crankshaft main bearing. The gears are lubricated by the oil spray plug.

5) Cooling of pistons (oil jet)

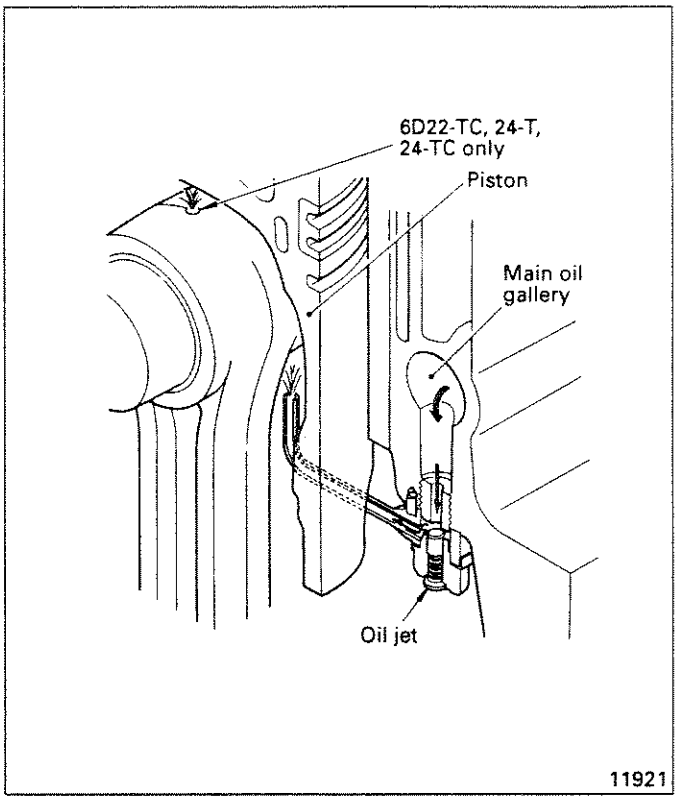

An oil jet is fitted under the main oil gallery for each cylinder. These oil jets spray engine oil onto the inside surfaces of the pistons to help cool the pistons.
Each oil jet has a check valve that opens and closes at specified oil pressures, thus preventing decreases in oil volume and the loss of oil pressure when the pressure is already low.
In the 6D22-TC, 24-T and 24-TC, each piston has a cooling cavity. Oil sprayed out of the oil jets enters these cavities to further cool the pistons.

(b) 8DC

Oil supplied to the crankcase main gallery returns to the oil pan after lubricating each part.

1) Main bearing, connecting rod bearing and piston

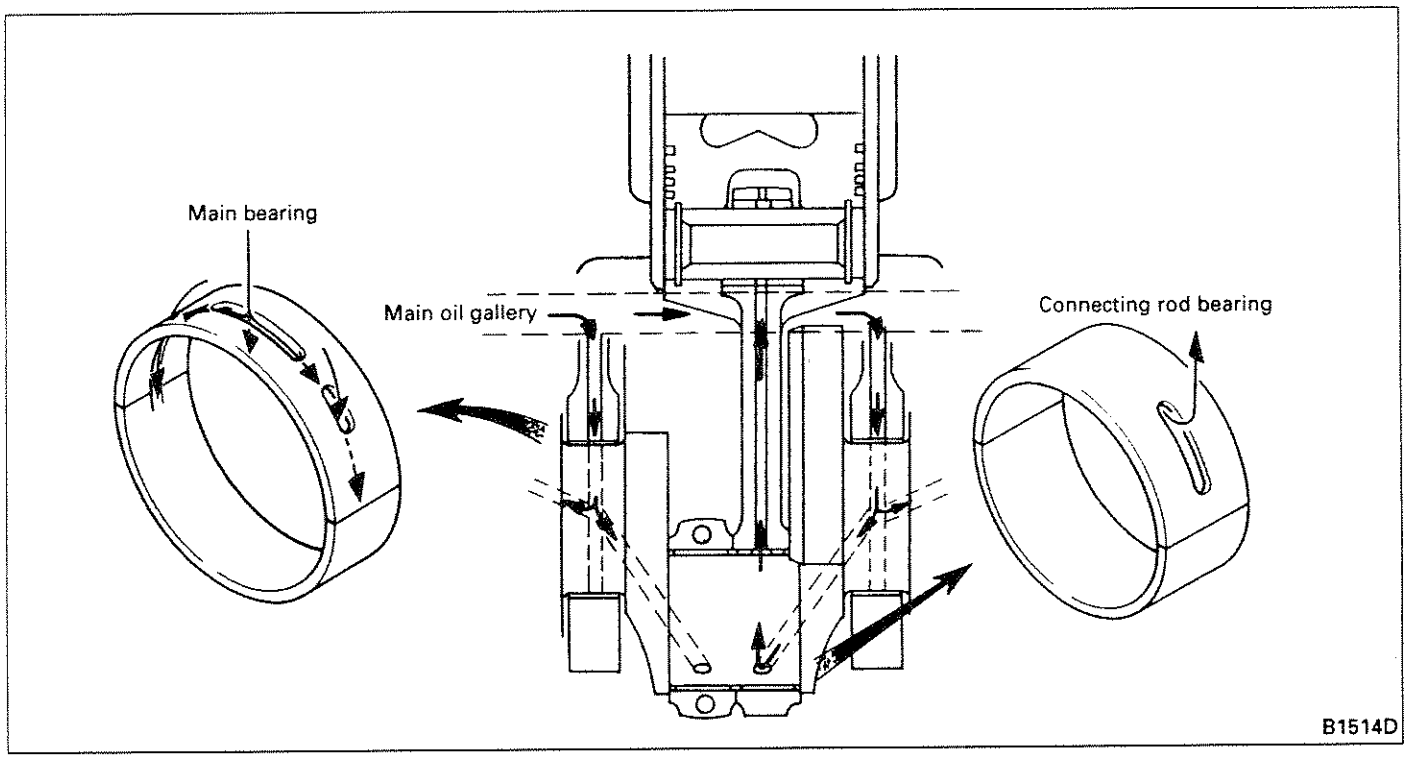

Oil fed from the oil main gallery through the oil passage in crankcase lubricates the main bearing. Then, it lubricates connecting rod bearing through the oil passage in the crankshaft and, finally, it lubricates the connecting rod bushing through the oil passage in the connecting rod.

2) Camshaft

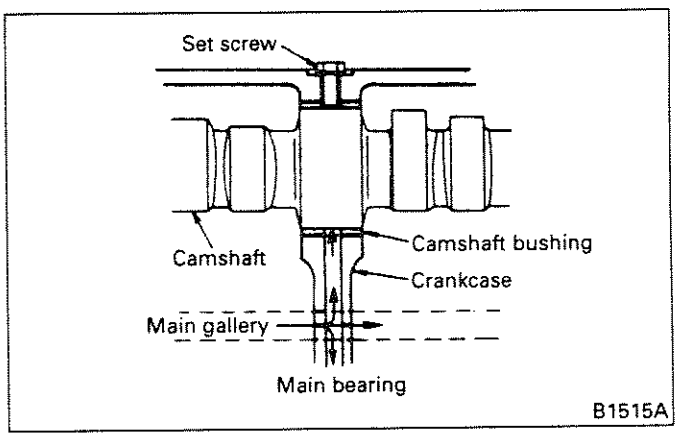

Oil fed through the crankcase oil passage from the oil main gallery lubricates camshaft bushing.

3) Valve mechanism

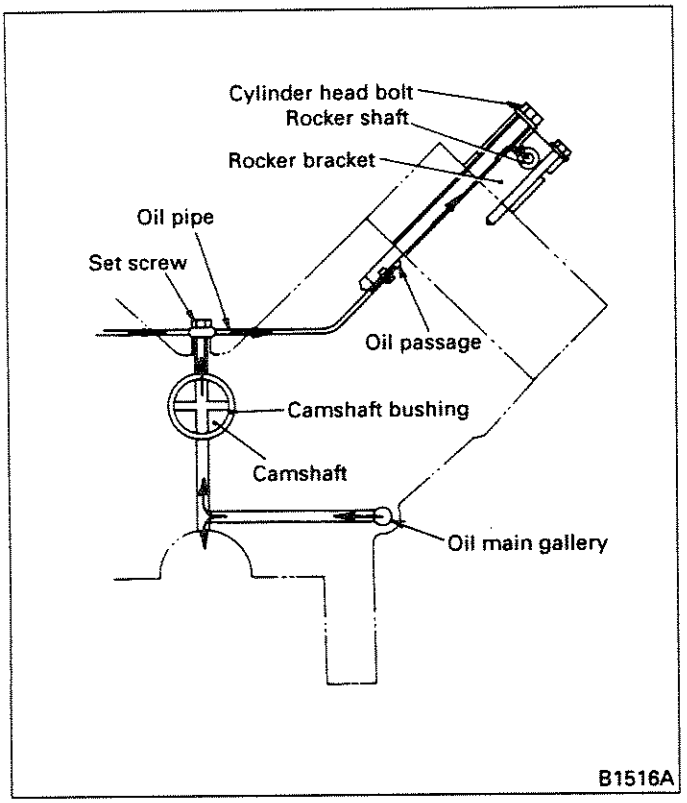

Oil, which has lubricated the camshaft bushing No. 1, flows through an oil pipe into the oil passage at the top of the crankcase. The oil passage is connected to the hole for the cylinder head bolt and oil flows into the rocker shaft through the cylinder head bolt from the rocker bracket.

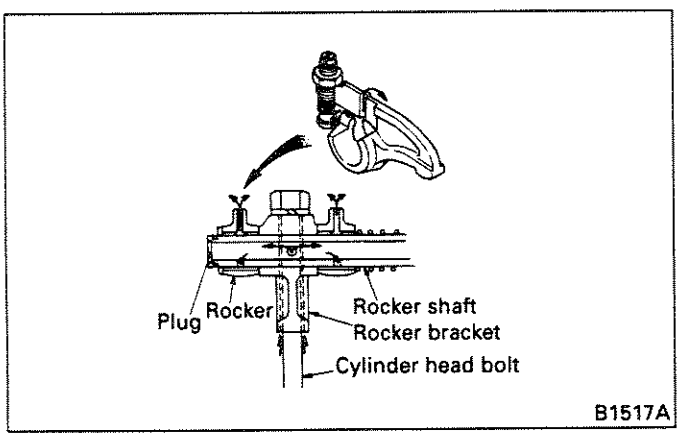

Oil fed into the rocker shaft lubricates the rocker bushing through the oil hole and then flows into an oil groove in the rocker bushing. Furthermore, oil spurts out from the top of the rocker to lubricate the surfaces in contact with the valve cap and the valve stem. Oil coming out of the oil hole in the side of the rocker lubricates the adjusting screws and the surfaces in contact with the push rod.

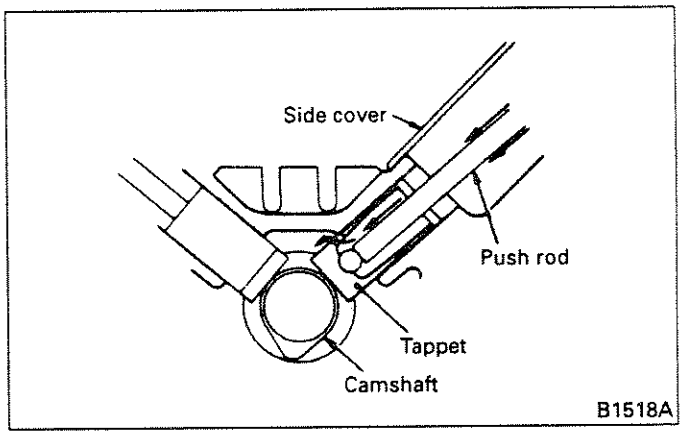

Oil flows into the tappet along the push rod. Oil coming out of the oil hole of the tappet lubricates the sliding portion of tappet and the contact area of camshaft and returns to the oil pan.

4) Timing gear

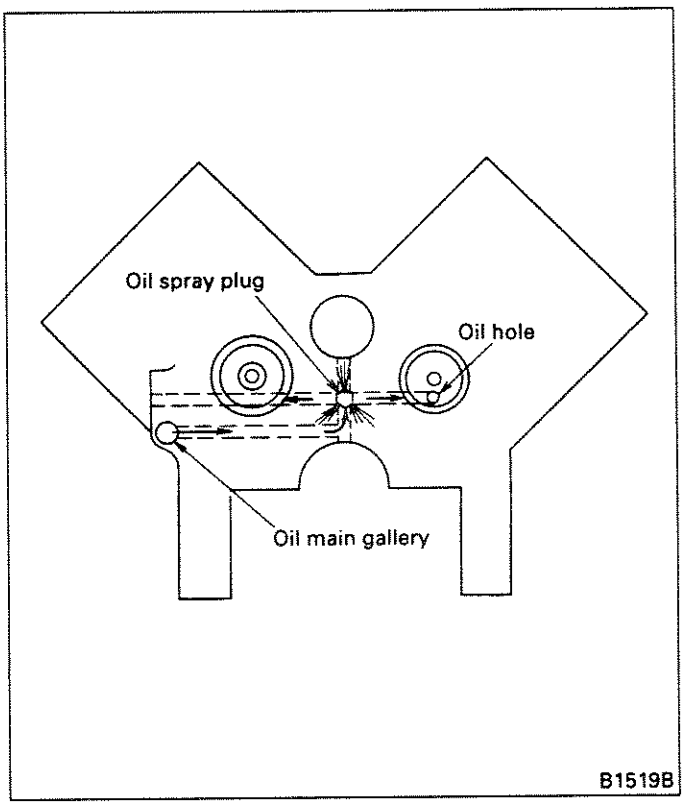

Oil flows from the oil main gallery through the crankcase oil passage to the oil spray plug area and then to the oil hole. Oil that has splashed from the oil hole lubricates the meshing surfaces of each gear.

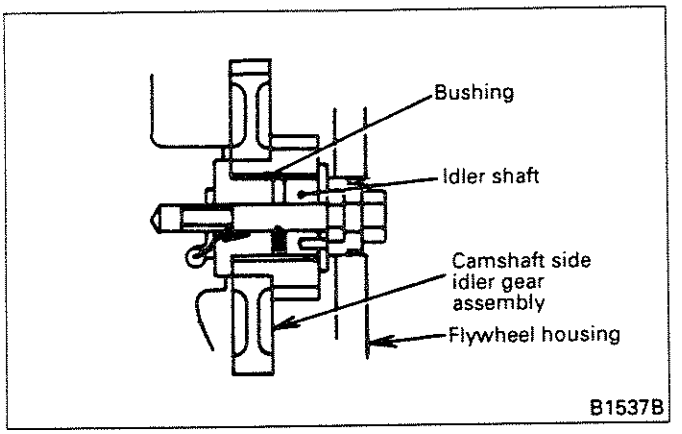

Oil, which has reached the oil hole through the crankcase oil passage, lubricates the bushing through the gap between the bolt and idler shaft.

(5) Lubrication of turbocharger

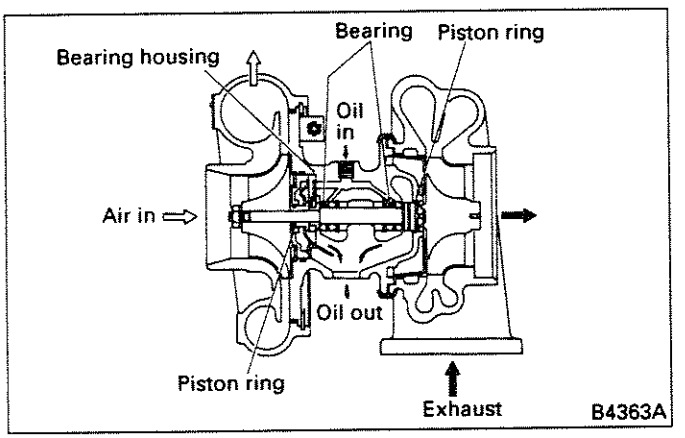

Part of the engine oil is directed through the oil pipe from the crankcase into the turbocharger. The engine oil passes through the oil hole in the turbocharger bearing housing to lubricate the bearings. It is then returned through the oil outlet at the bottom of the bearing housing back to the crankcase and to the oil pan. A piston ring is installed on the outside of each bearing, serving as an oil seal.

(6) Injection pump and air compressor

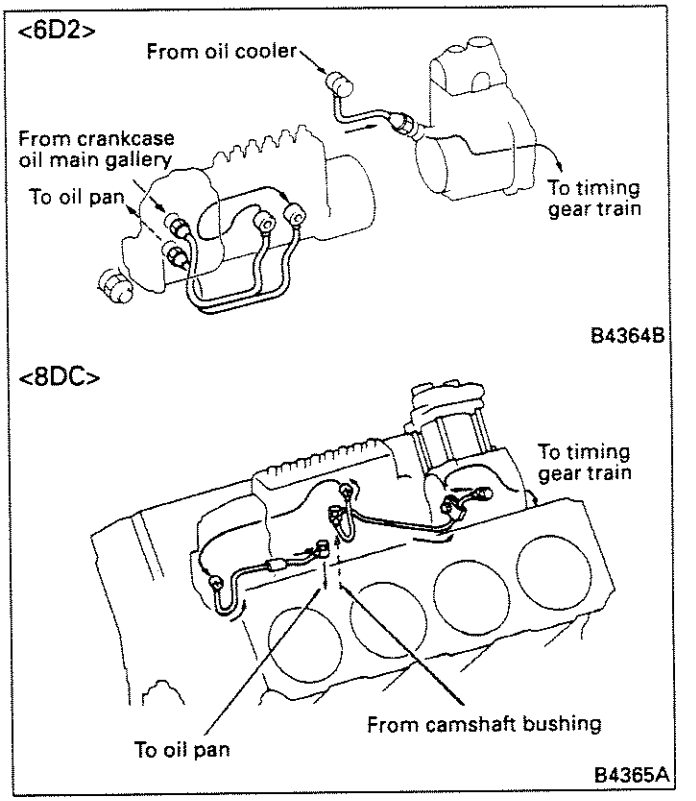

The injection pump and air compressor are lubricated as follows:

<6D2>

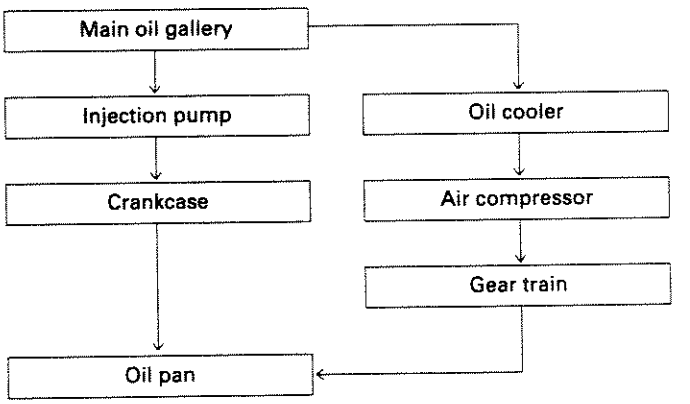

<8DC>

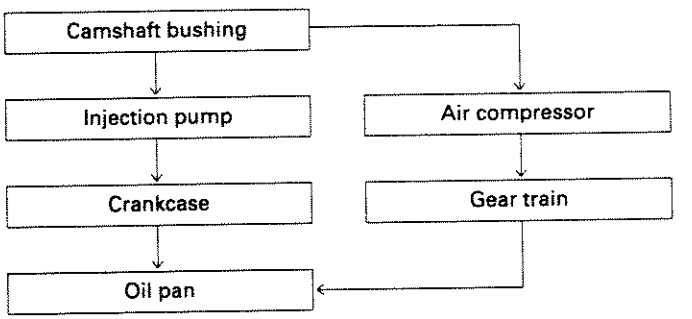

(7) Lubrication of water pump

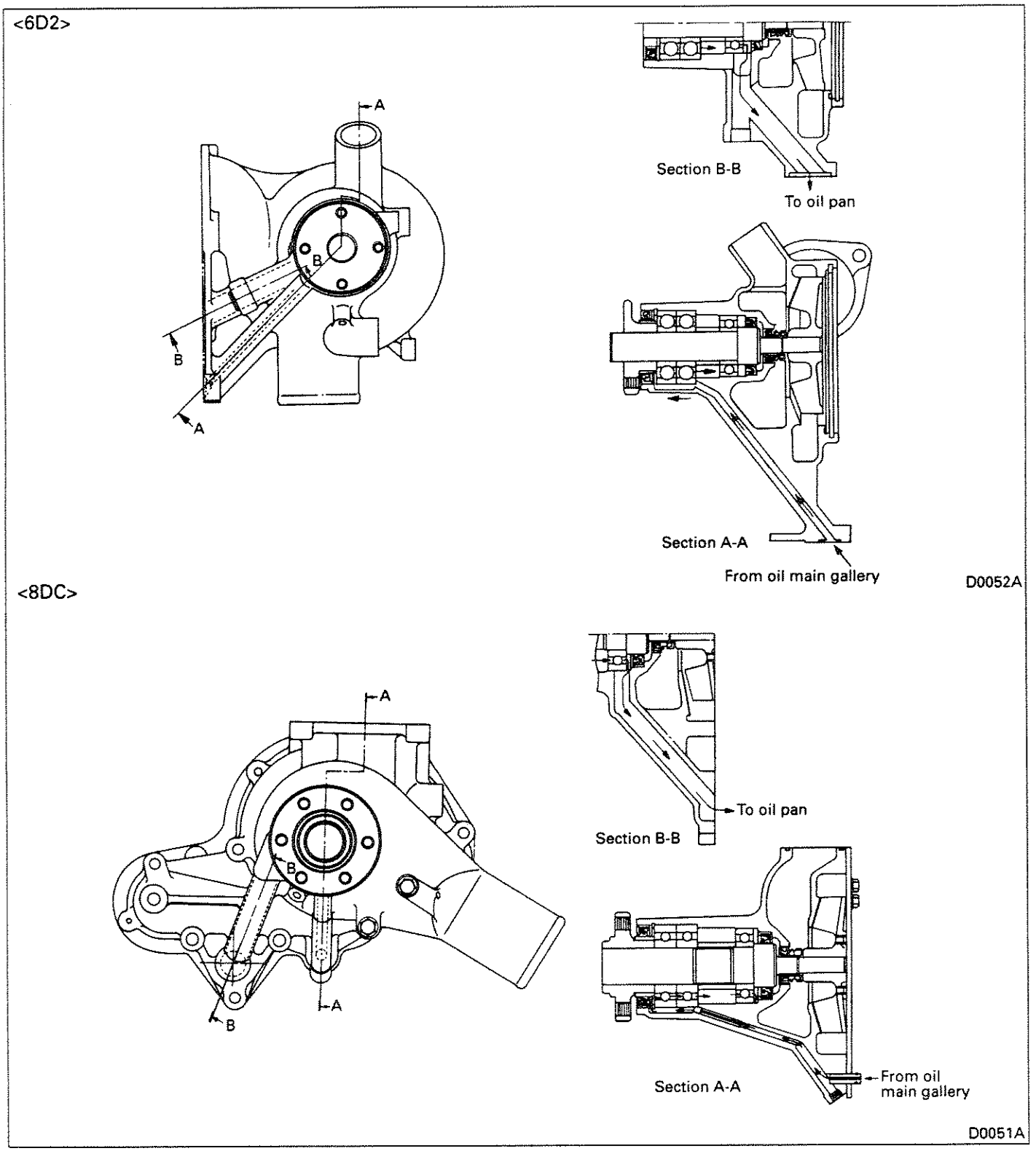

The engine oil drawn by the pump is routed through the crankcase oil passage to the water pump. The engine oil delivered to the water pump flows through the oil hole of the water pump and lubricates the bearings.

The engine oil is then forced back from the drain port to the crankcase and returns to the oil pan.

2. SPECIFICATIONS

Item			Specification	
			6D2	8DC
Engine oil	Quality		API classification class CC or better (without turbocharger) API classification class CD or better (with turbocharger)	
	Capacity	Oil pan	Approx. 27 L (for general use) Approx. 25 L (for construction machinery)	Approx. 30 L
		Oil filter	Approx. 4 to 4.5 L	Approx. 4 to 4.5 L
Lubrication method			Forced lubrication by oil pump	
Oil pump		Type	Forced lubrication by gear pump (integral relief valve)	
Relief valve		Type	Ball valve	
Oil filter	Full-flow filter element	Type	Filter paper type	
	Bypass filter element	Type	Filter paper type	
Oil bypass alarm		Type	Piston valve type (integral electric contact)	
Oil cooler		Type	Shell and plate type (multi-plate type)	
Oil bypass valve		Type	Piston valve type	
Regulator valve		Type	Piston valve type	
Oil jet check valve		Type	Piston valve type	–

3. SERVICE STANDARDS

3.1 Service Standards Table

Unit: mm

Maintenance item				Nominal value (Basic diameter in [ ])	Limit	Remedy and remarks
Oil pressure (Oil temperature 70°C to 90°C)	At idle			145 kPa {1.5 kgf/cm²} or more	49 kPa {0.5 kgf/cm²}	Inspection
	At maximum speed			295 to 490 kPa {3 to 5 kgf/cm²}	195 kPa {2 kgf/cm²}	
Oil pump	Backlash between crankshaft gear and oil pump idler gear		6D22, 22-T, 22-TC	0.15 to 0.27	0.4	Replace
			6D24-T, 24-TC	0.08 to 0.2		
			8DC	0.08 to 0.19		
	Backlash between oil pump idler gear and oil pump gear		6D22, 22-T, 22-TC	0.15 to 0.27	0.4	Replace
			6D24-T, 24-TC	0.08 to 0.2		
			8DC	0.08 to 0.19		
	Difference between pump case depth and gear height		6D22, 22-T, 22-TC, 8DC	0.05 to 0.11	0.15	Replace
			6D24-T, 24-TC	0.05 to 0.12		
	Gear tooth tip to pump case clearance		6D22, 22-T, 22-TC, 8DC	0.11 to 0.18	0.2	Replace
			6D24-T, 24-TC	0.20 to 0.29	0.35	
	Drive gear shaft to cover clearance			[20] 0.04 to 0.07	0.15	Replace
	Driven gear shaft to driven gear bushing clearance			[20] 0.04 to 0.07	0.15	Replace
	Idler gear shaft to idler gear bushing clearance		6D2	[22] 0.03 to 0.05	0.15	Replace bushing
			8DC	[20] 0.03 to 0.05		
	Relief valve opening pressure		6D22, 22-T, 22-TC, 24-T, 24-TC	1080 to 1270 kPa {11 to 13 kgf/cm²}	–	Replace spring
			8DC	1570 to 1860 kPa {16 to 19 kgf/cm²}	–	
	Relief valve spring load	Installed length: 46.3	6D22, 22-T, 22-TC	150 to 160 N {15.3 to 16.9 kgf}	–	
		Installed length: 47.7	6D24-T, 24-TC	180 to 200 N {18.3 to 20.5 kgf}	–	
		Installed length: 56.6	8DC	255 to 270 N {26 to 27.6 kgf}	–	
Oil bypass alarm valve opening pressure (on start pressure)				340 to 390 kPa {3.5 to 4 kgf/cm²}	–	Replace
Oil cooler bypass valve	Valve opening pressure		6D2	175 to 215 kPa {1.8 to 2.2 kgf/cm²}	–	Replace
			8DC	390 to 490 kPa {4 to 5 kgf/cm²}	–	
Regulator valve	Valve opening pressure			360 to 420 kPa {3.7 to 4.3 kgf/cm²}	–	Replace
	Spring load (Installed length: 48.3)			76 to 80 N {7.8 to 8.2 kgf}	–	

3.2 Tightening Torque Table

Location tightened		Screw size O. D. x pitch mm	Tightening torque N·m {kgf·m}	Remarks
Oil pump idler shaft nut		M12 x 1.25	59 to 78 {6 to 8}	Apply LOCTITE No. 262
Oil pump cover mounting bolt	6D24	M10 x 1.25	39 to 49 {4 to 5}	Wet
	8DC	M10 x 1.5		
Oil bypass alarm		M20 x 1.5	44 to 54 {4.5 to 5.5}	
Oil filter center bolt		M16 x 1.5	59 to 69 {6 to 7}	
Oil filter drain plug		M10 x 1.25	20 ± 4.9 {2 ± 0.5}	
Oil cooler	Bypass valve plug (6D2)	M20 x 1.5	15 to 20 {1.5 to 2.0}	
	Bypass valve	M27 x 1.5		
Regulator valve		M27 x 1.5	98 to 115 {10 to 12}	
Oil pan drain plug		M18 x 1.5	69 {7}	

4. SERVICE PROCEDURE

Oil Pressure Measurement

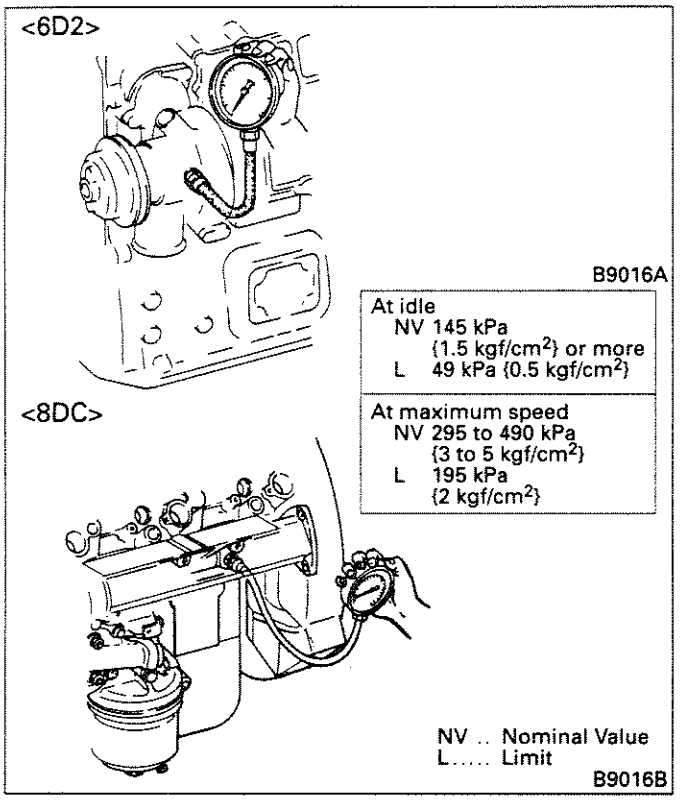

(1) With the oil pressure switch removed and pressure gauge installed, warm up the engine until the oil temperature reaches 70°C to 90°C.

(2) Measure the oil pressure at idle and maximum speeds. If the measurement is below the limit, overhaul the lubricating system.

4.1 Oil Pump

4.1.1 Removal and installation

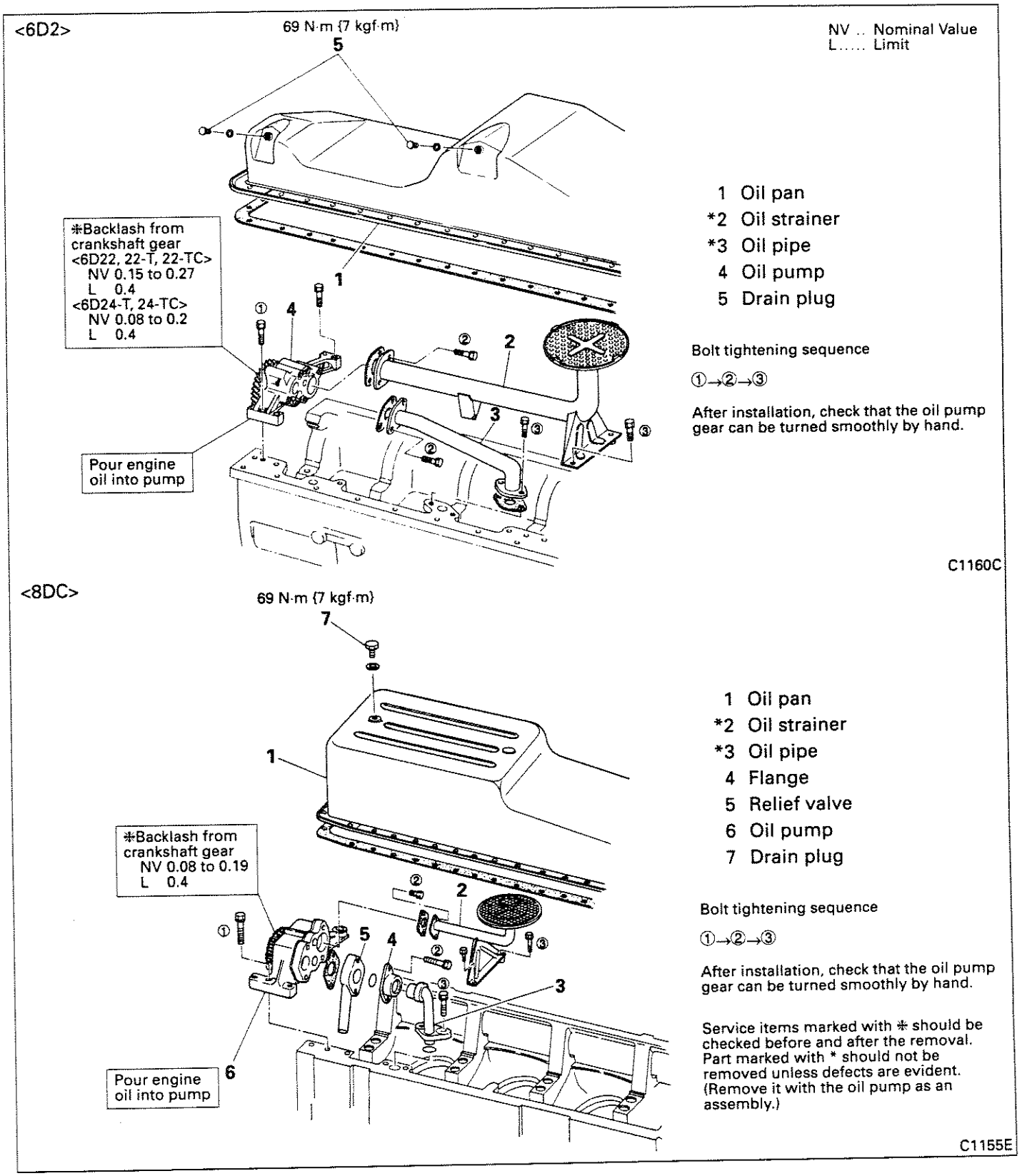

(1) Inspection of relief valve <8DC>

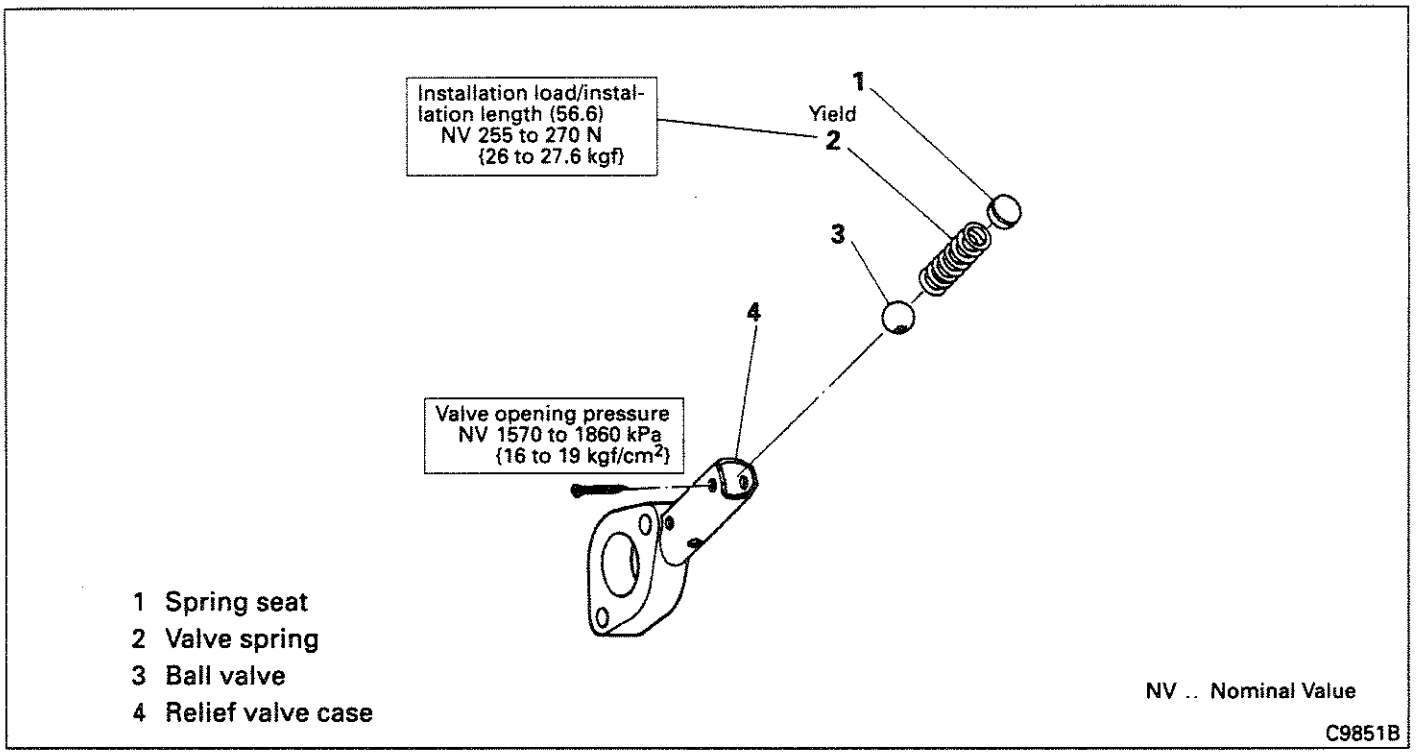

4.1.2 Disassembly and inspection

<6D22, 22-T, 22-TC>

BD .. Basic Diameter
NV .. Nominal Value
L..... Limit

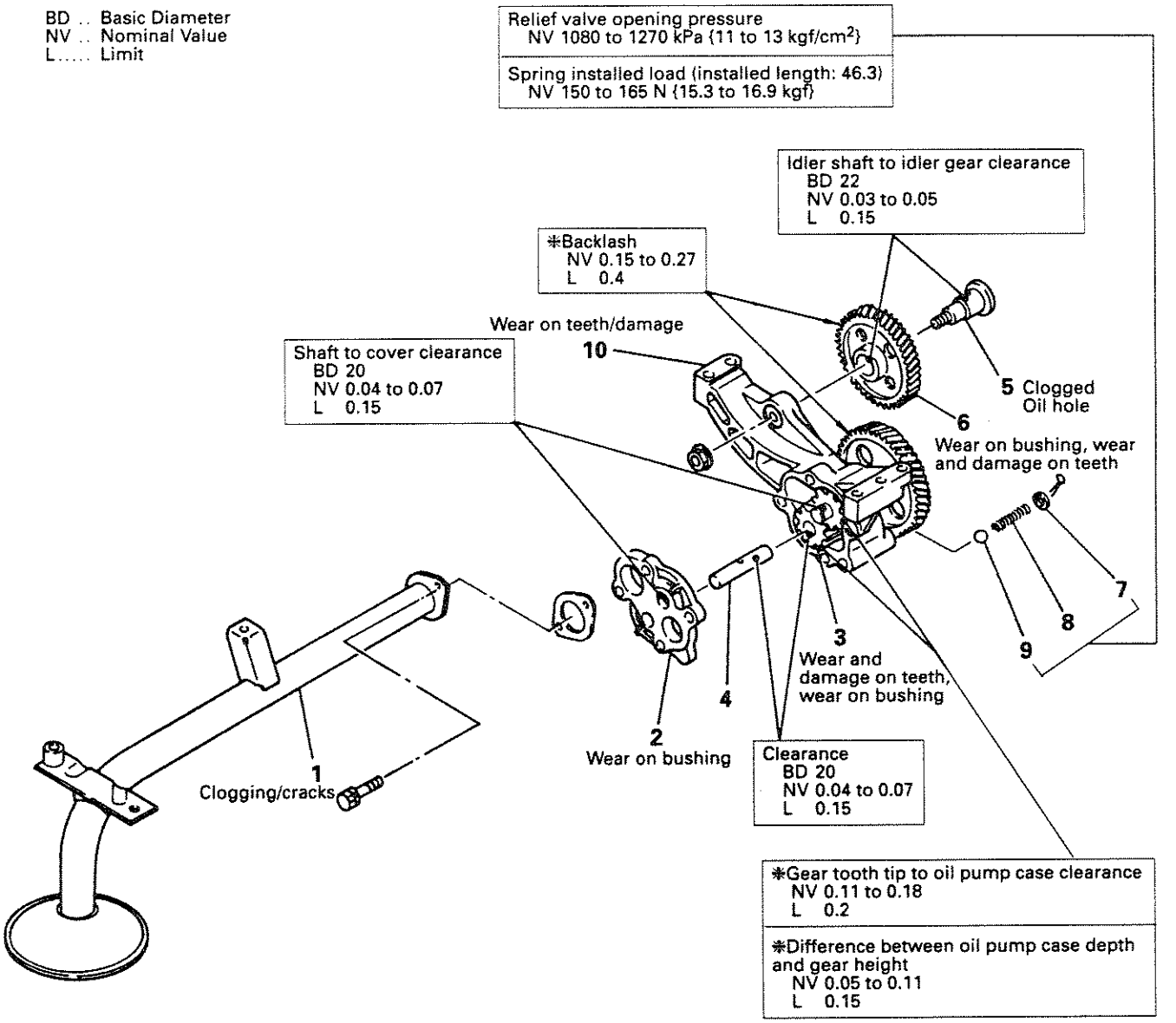

Disassembly sequence

1 Oil strainer
② Oil pump cover
3 Driven gear
*4 Driven gear shaft
5 Idler gear shaft
6 Idler gear
7 Seat
8 Spring
9 Ball
10 Case and gear assembly

For parts with an encircled number, refer to Disassembly and Inspection Procedures that follow.
Parts marked with * should not be removed unless defects are evident.
Service items marked with * should be checked before disassembly.

C9518D

<6D24-T, 24-TC>

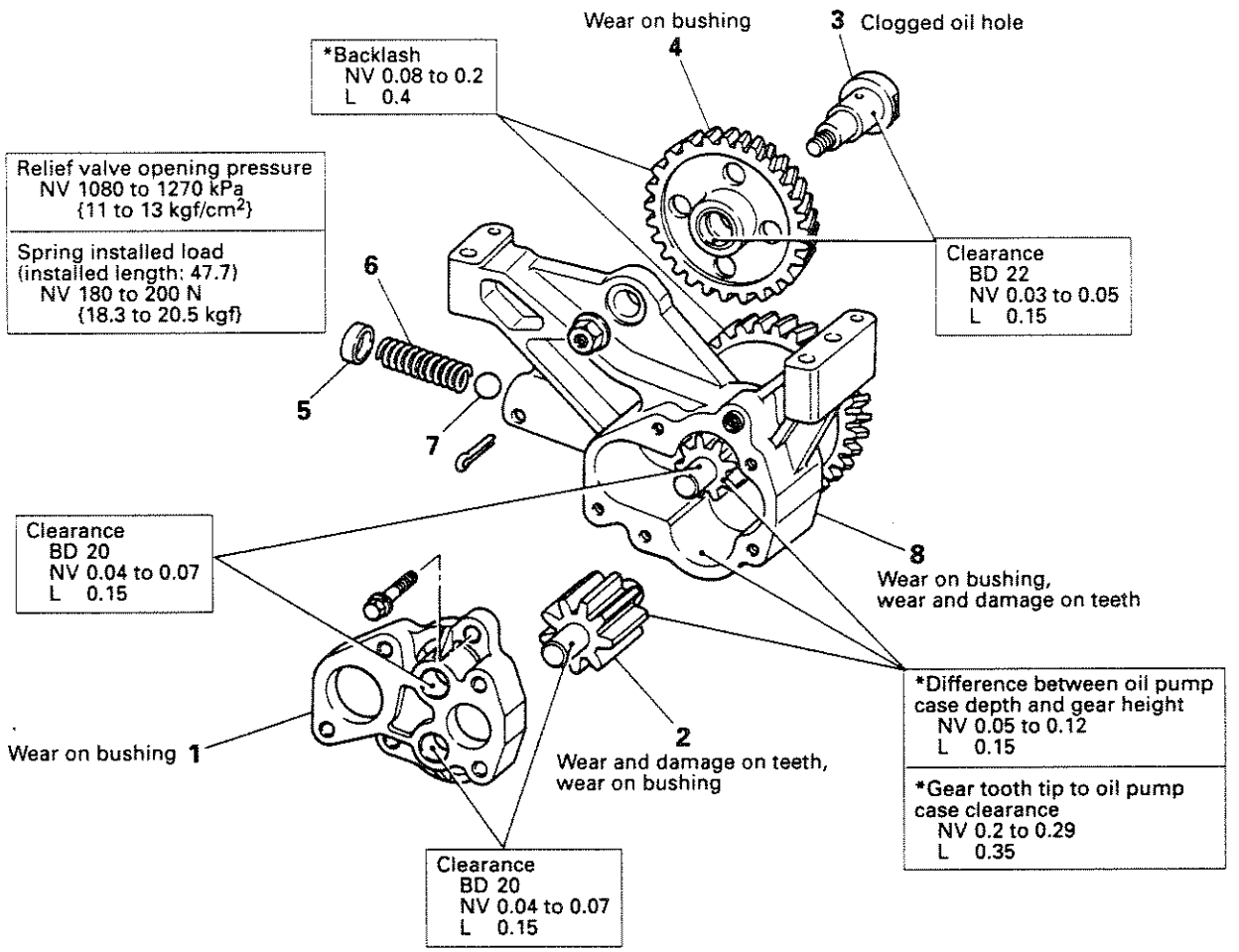

BD .. Basic Diameter
NV .. Nominal Value
L..... Limit

Disassembly sequence

① Oil pump cover
2 Driven gear assembly
3 Idler shaft
4 Idler gear
5 Spring seat
6 Valve spring
7 Ball valve
8 Case and gear assembly

For parts with an encircled number, refer to Disassembly and Inspection Procedures that follow.
Service items marked with * should be checked before disassembly.

10374

<8DC>

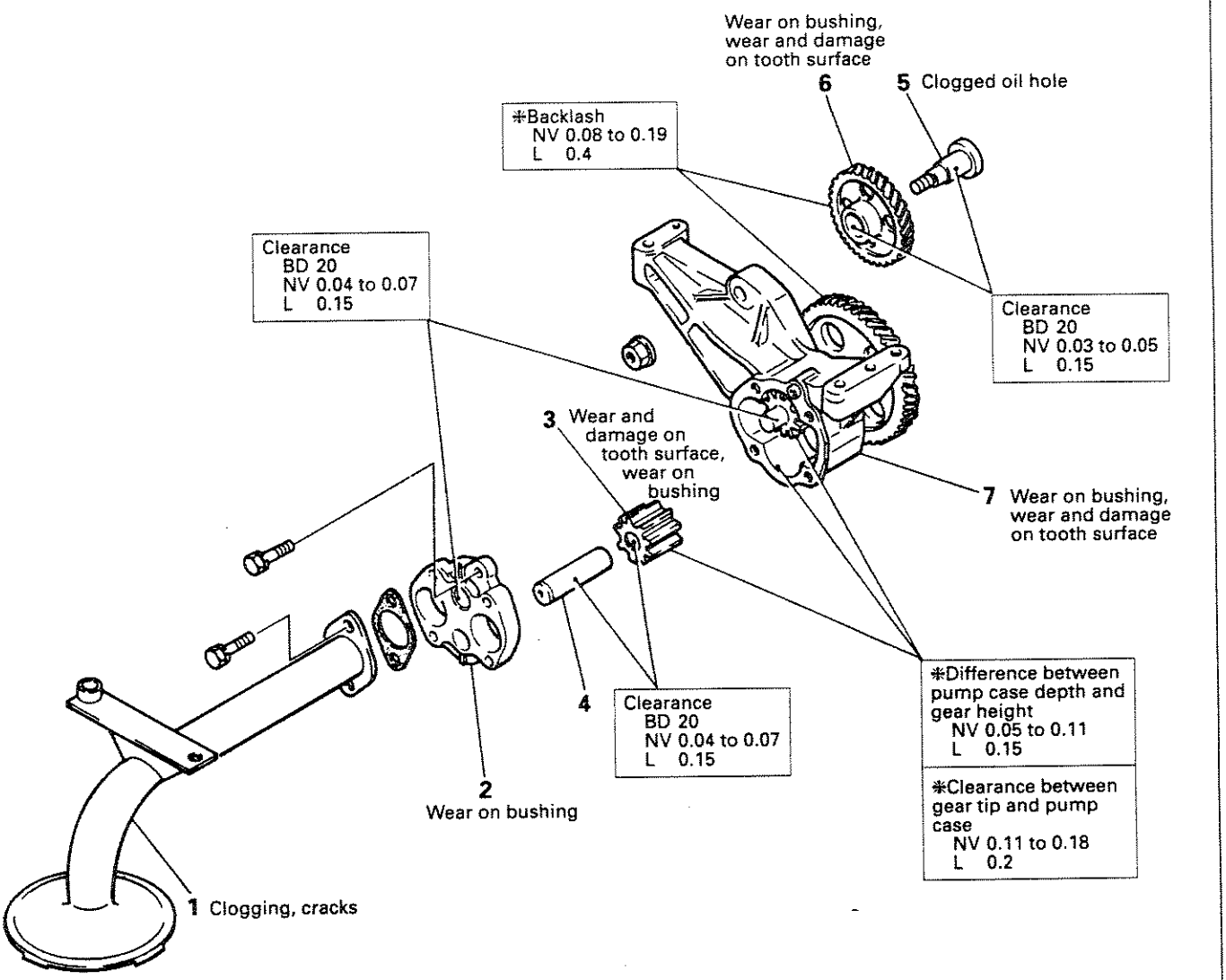

BD .. Basic Diameter
NV .. Nominal Value
L..... Limit

Disassembly sequence

1 Oil strainer
② Oil pump cover
3 Driven gear
*4 Driven gear shaft
5 Idler gear shaft
6 Idler gear
7 Case and gear assembly

For parts with an encircled number, refer to Disassembly and Inspection Procedures that follow.
Parts marked with * should not be removed unless defects are evident.
Service items marked with ✻ should be checked before disassembly.

C9501C

Disassembly and Inspection Procedures

(1) Removal of oil pump cover

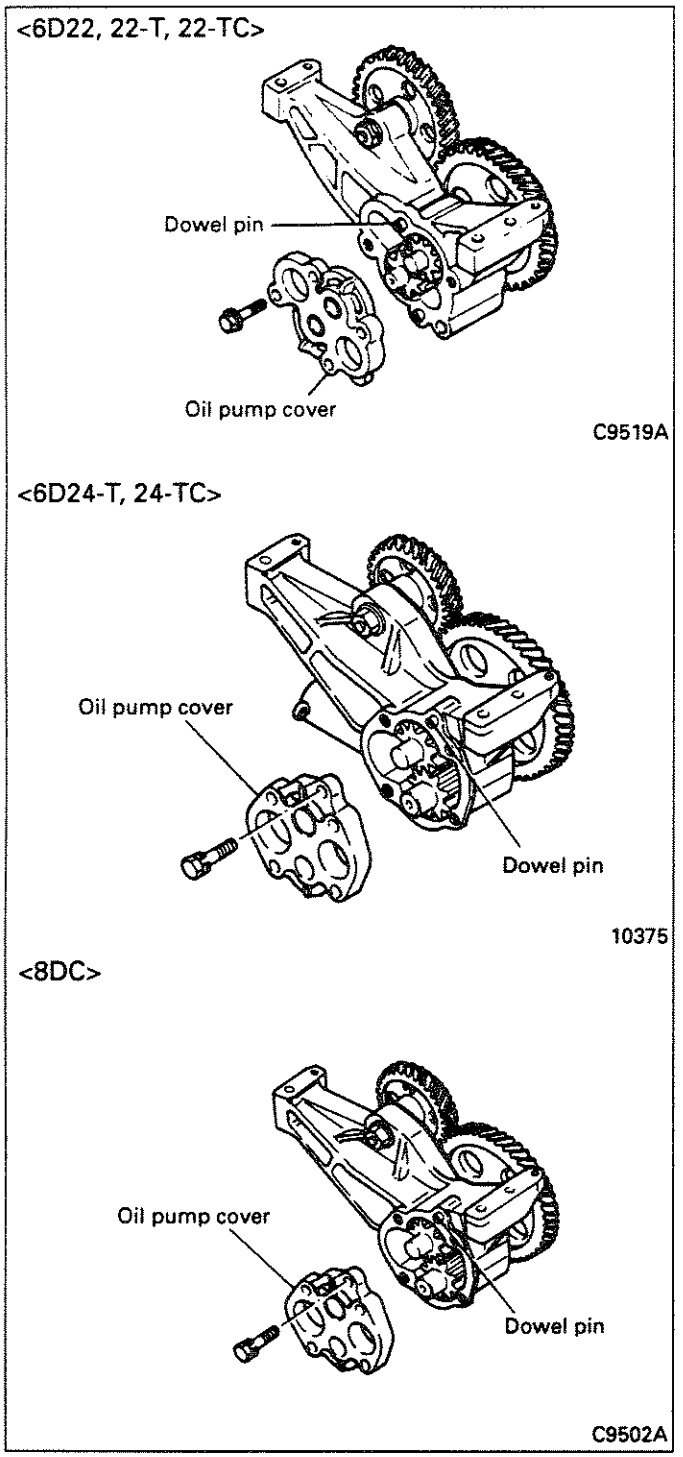

The oil pump cover is positioned with the dowel pin of the oil pump case.
To remove the oil pump cover, tap on it with a plastic hammer or the like.

(2) Difference between oil pump case depth and gear height

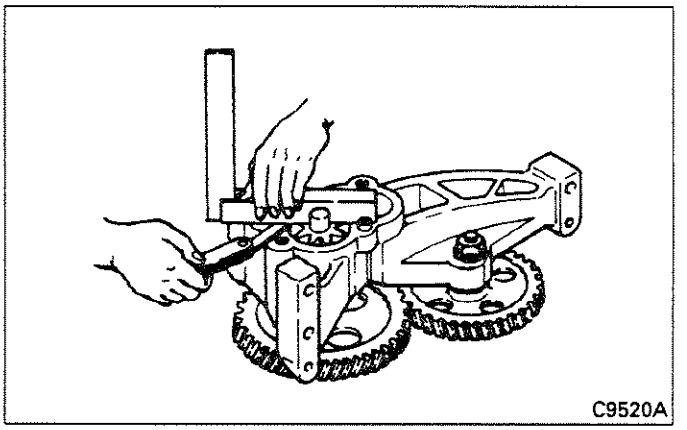

If the measurement exceeds the limit, replace the gear. Note, however, that the drive gear must be replaced with a case and gear assembly.

(3) Gear tooth end to oil pump case clearance

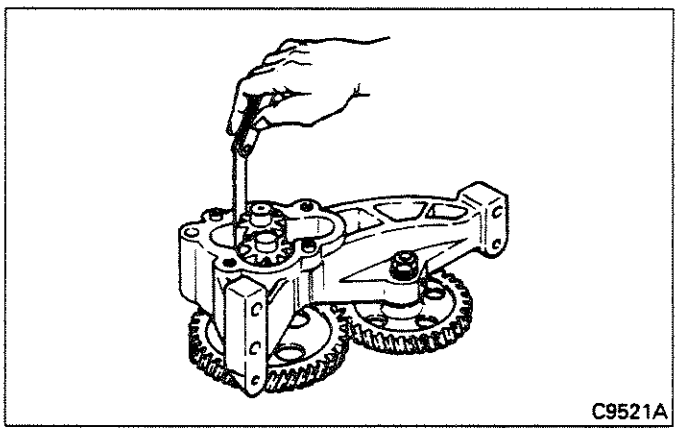

If the measurement exceeds the limit, replace the gear. Note, however, that the drive gear must be replaced with a case and gear assembly.

(4) Gear shaft to case, cover, and driven gear clearance

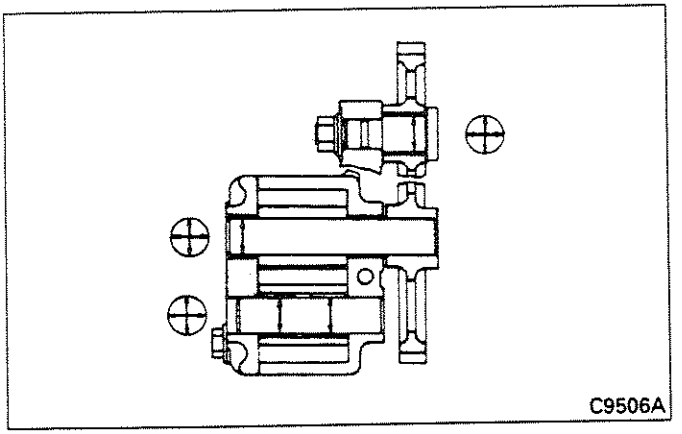

If the measurement exceeds the limit, replace the part to which bushing is installed.

4.1.3 Reassembly

<6D22, 22-T, 22-TC>

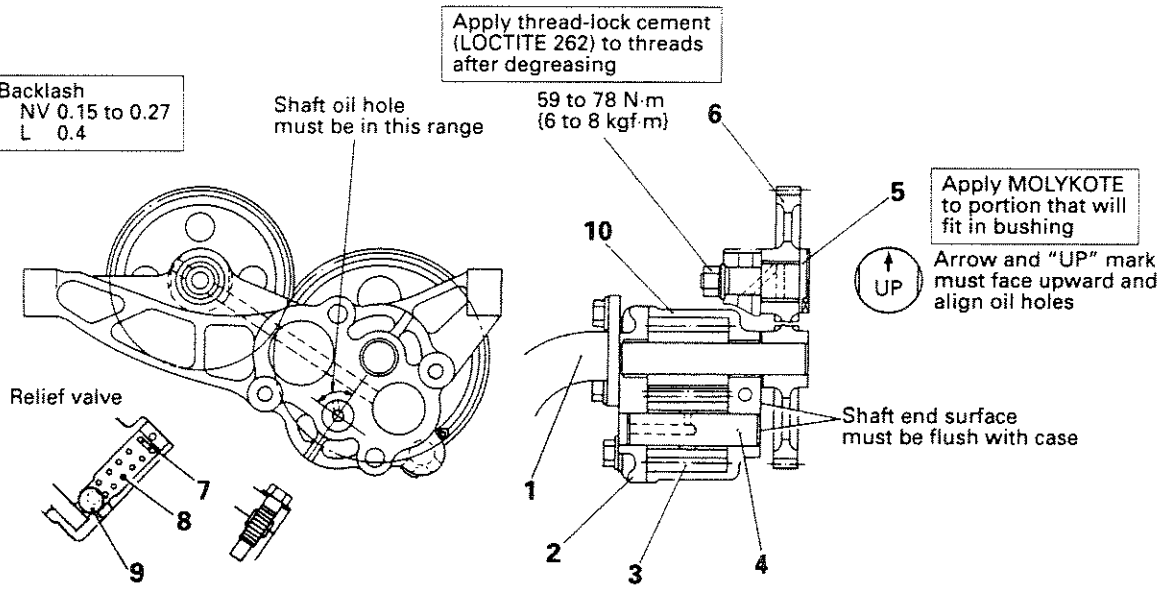

Assembly sequence

10→9→8→7→6→5→4→3→2→1

C9525C

<6D24-T, 24-TC>

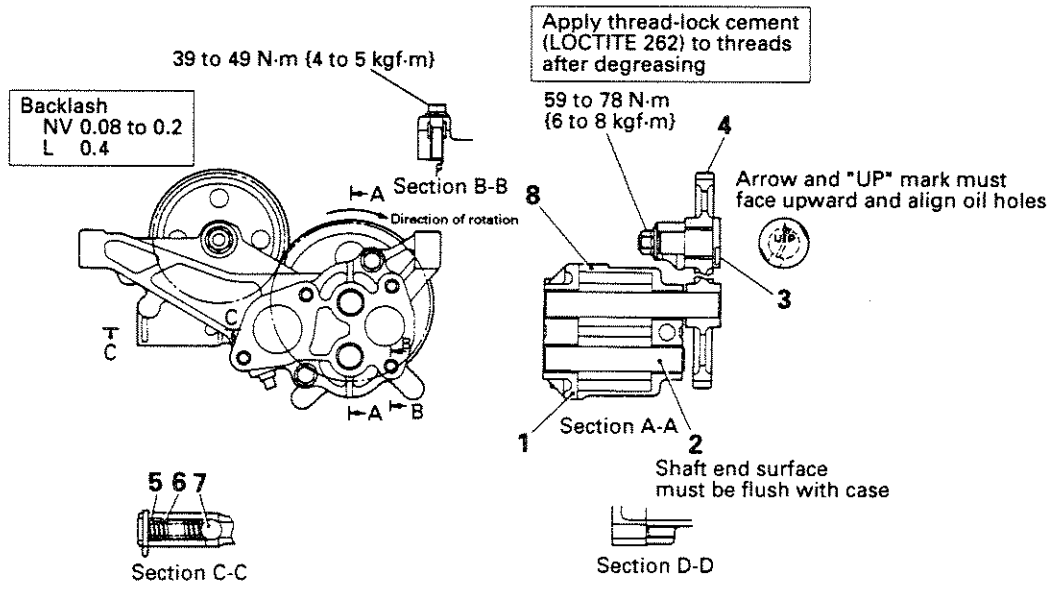

Assembly sequence

8→7→6→5→4→3→2→1

NOTE:
Hold the oil strainer 1 in position temporarily for subsequent attachment to the crankcase.

11924

<8DC>

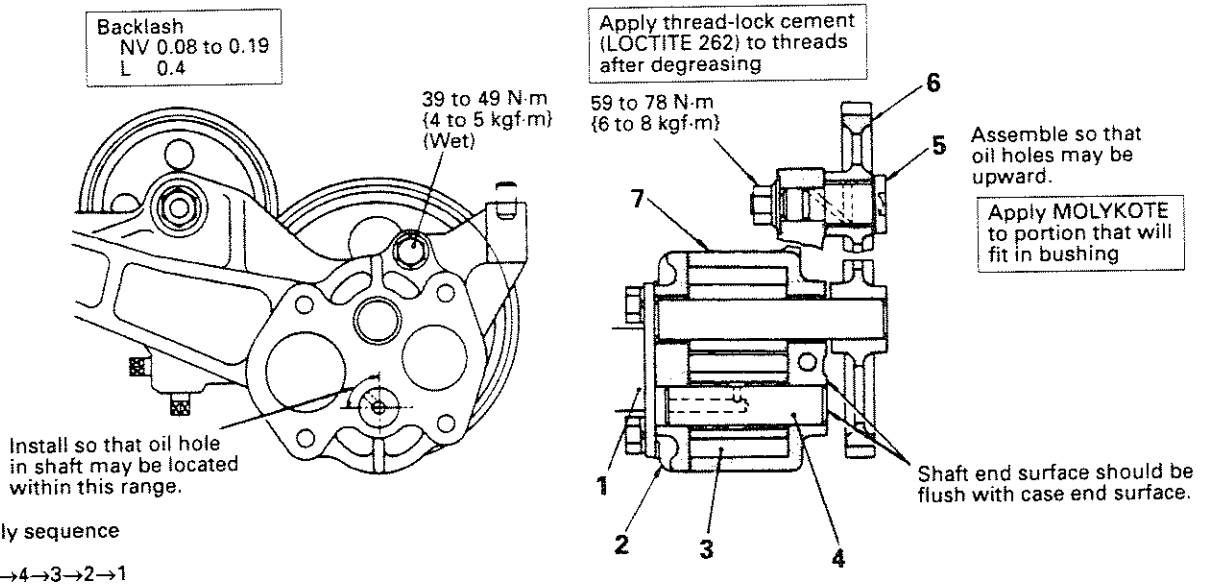

Assembly sequence

7→6→5→4→3→2→1

NOTE:
Hold the oil strainer 1 in position temporarily for subsequent attachment to the crankcase.

C9517B

4.2 Oil Filter and Oil Cooler

4.2.1 Removal and installation

<6D2>

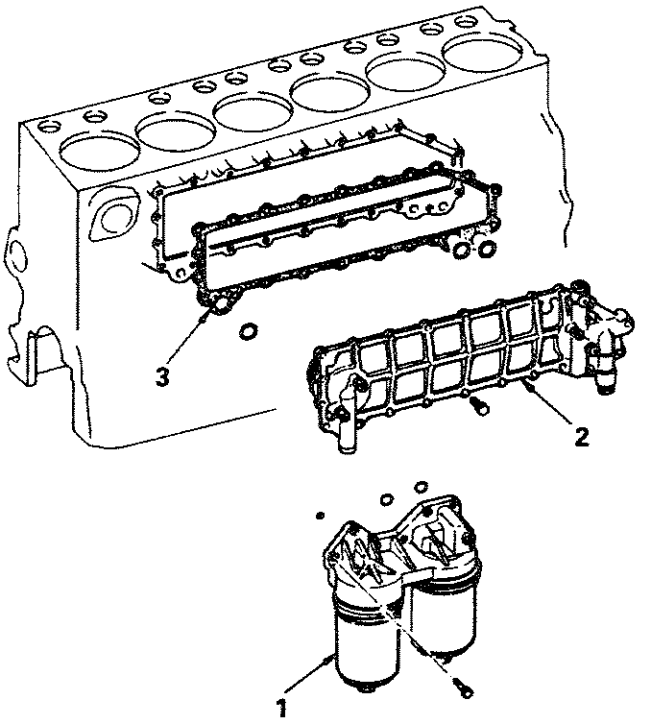

1 Oil filter
2 Oil cooler
3 Gasket

C1158E

<8DC>

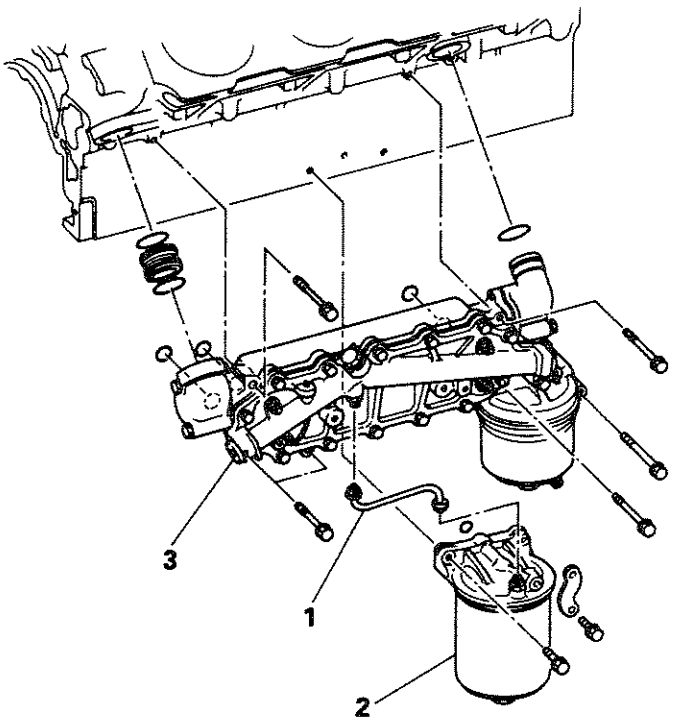

1 Oil pipe
2 Bypass oil filter
3 Oil cooler and oil filter

NOTE:
1. **Do not apply oil or grease to the O-rings at the oil cooler's water inlet and outlet.**
2. **After installation, run the engine and check for possible oil and water leak.**

C1151B

4.2.2 Oil filter

NOTE:
The elements in the bypass and full-flow oil filters should be replaced every other time the engine oil is replaced. For specific replacement intervals, refer to the Owner's Handbook.

(1) Disassembly and reassembly

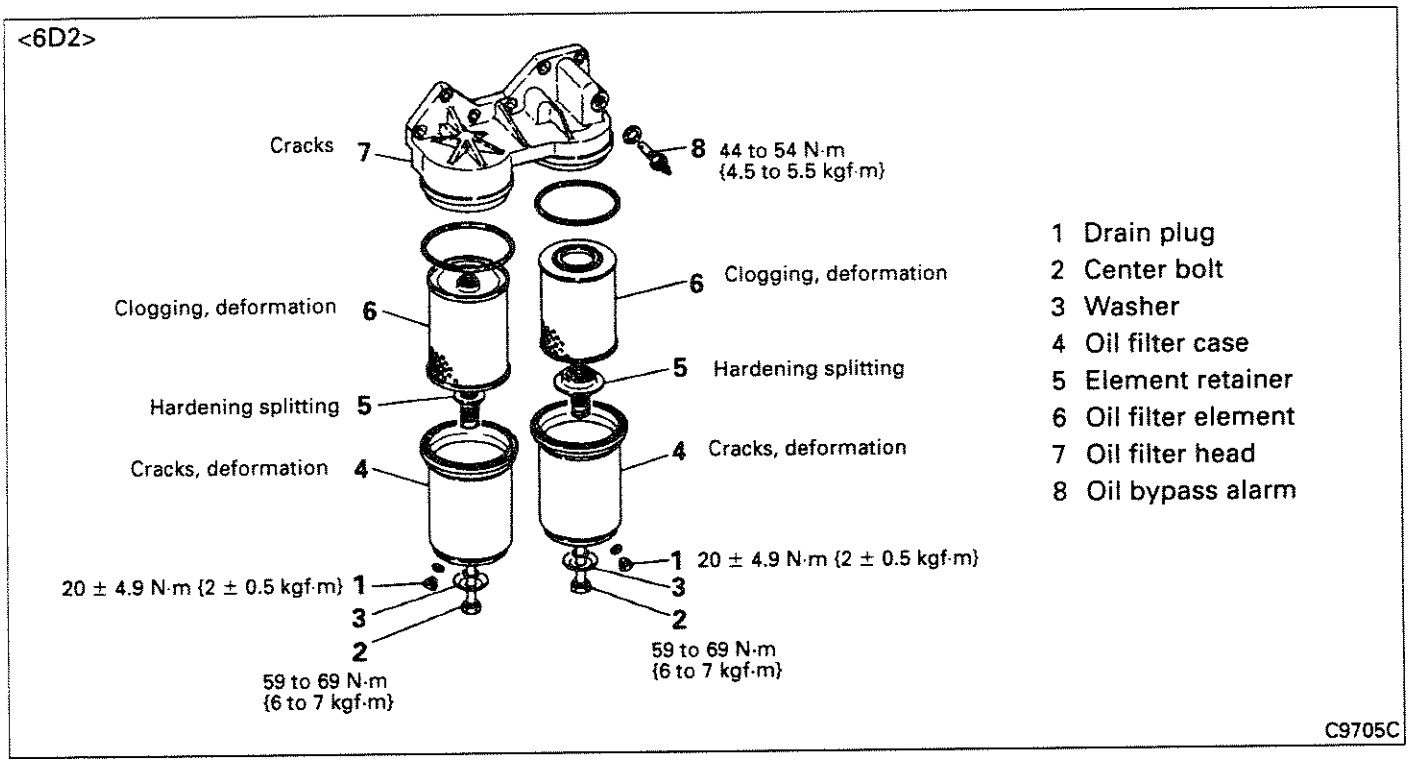

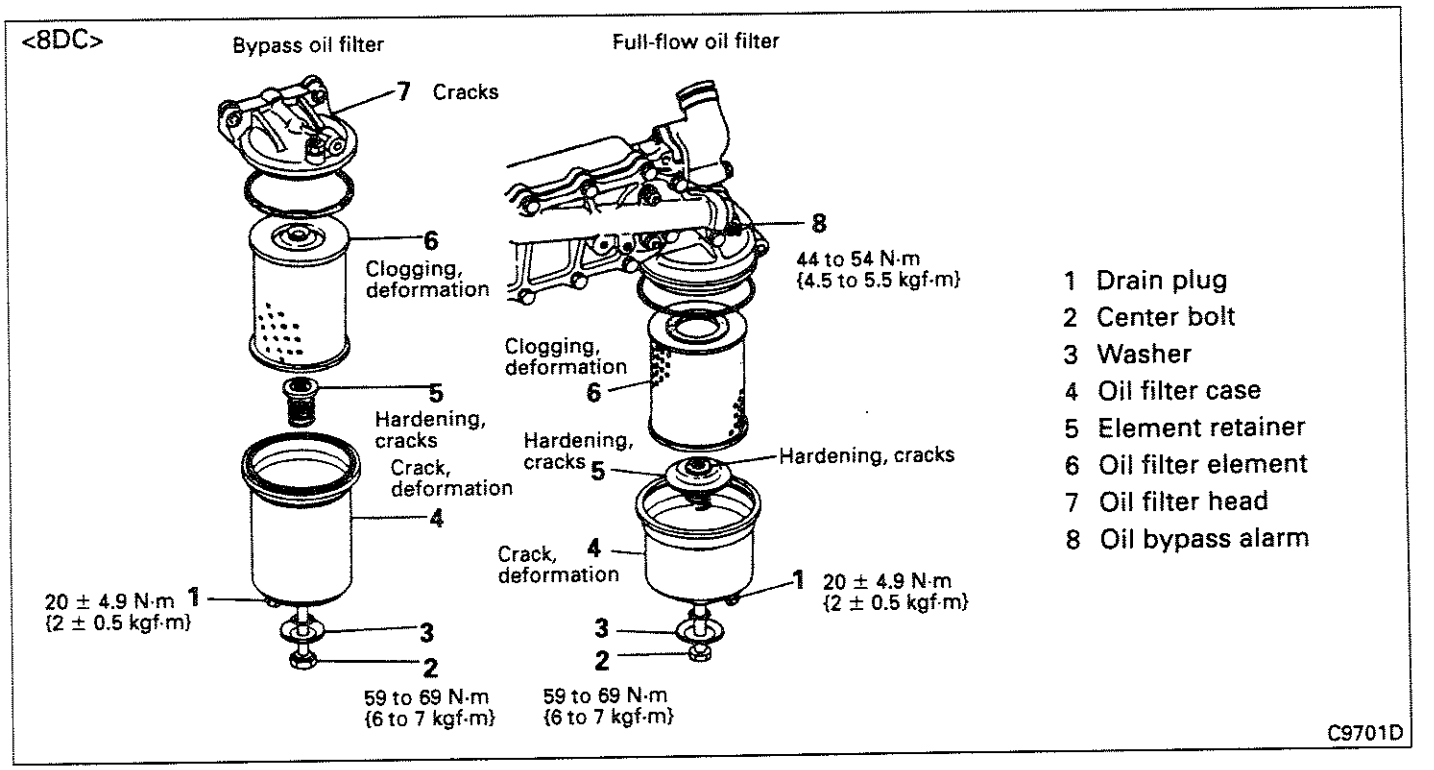

Inspection of oil bypass alarm

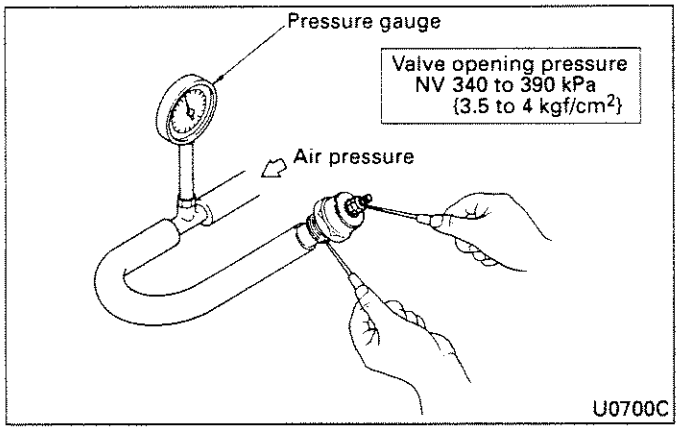

With no air pressure applied, check for continuity across the terminals as shown and replace the oil bypass alarm if there is continuity.
Next, with the air pressure applied and gradually increasing, measure the air pressure when there is continuity.
If the measurement is out of specification, replace the oil bypass alarm.

4.2.3 Oil cooler

(1) Disassembly and reassembly

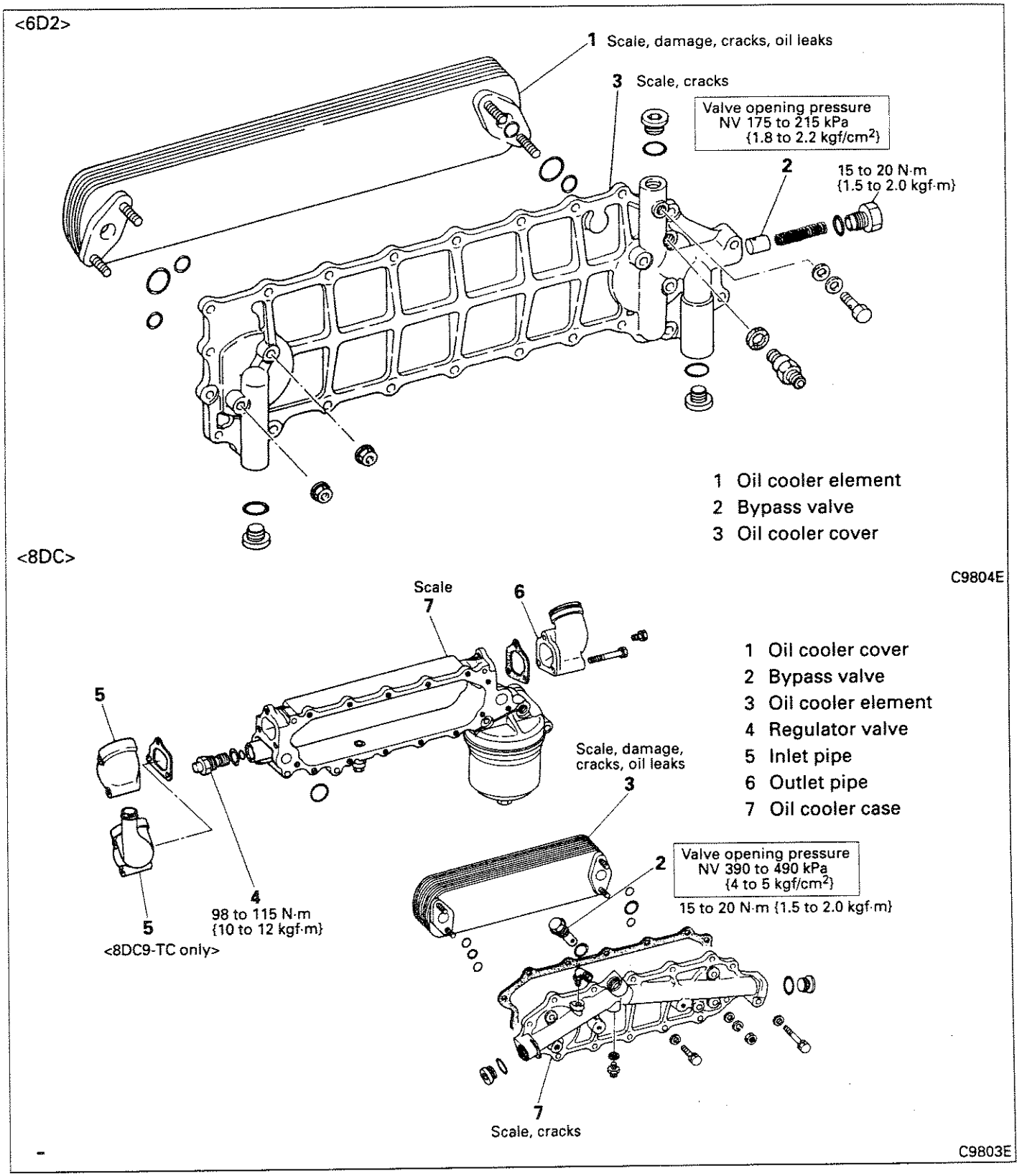

(2) Cleaning

(a) Check for carbon or sludge deposited in the oil passage of the oil cooler element and bypass valve. If contamination is evident, wash in a cleaning oil.

(b) If there is a lot of scale on the element and cover, wash it away with tap water (preferably hot).

(3) Pressure resistance test

Conduct the pressure resistance test to check for oil leak caused by damaged or cracked element.

NOTE:

Never attempt to apply pressure exceeding the specified test pressure.

Check for possible leak by applying a 1470 kPa {15 kgf/cm^2} air pressure to the element. Replace the element if air or oil leak or any other faulty condition is evident as a result of the test.

4.3 Regulator Valve

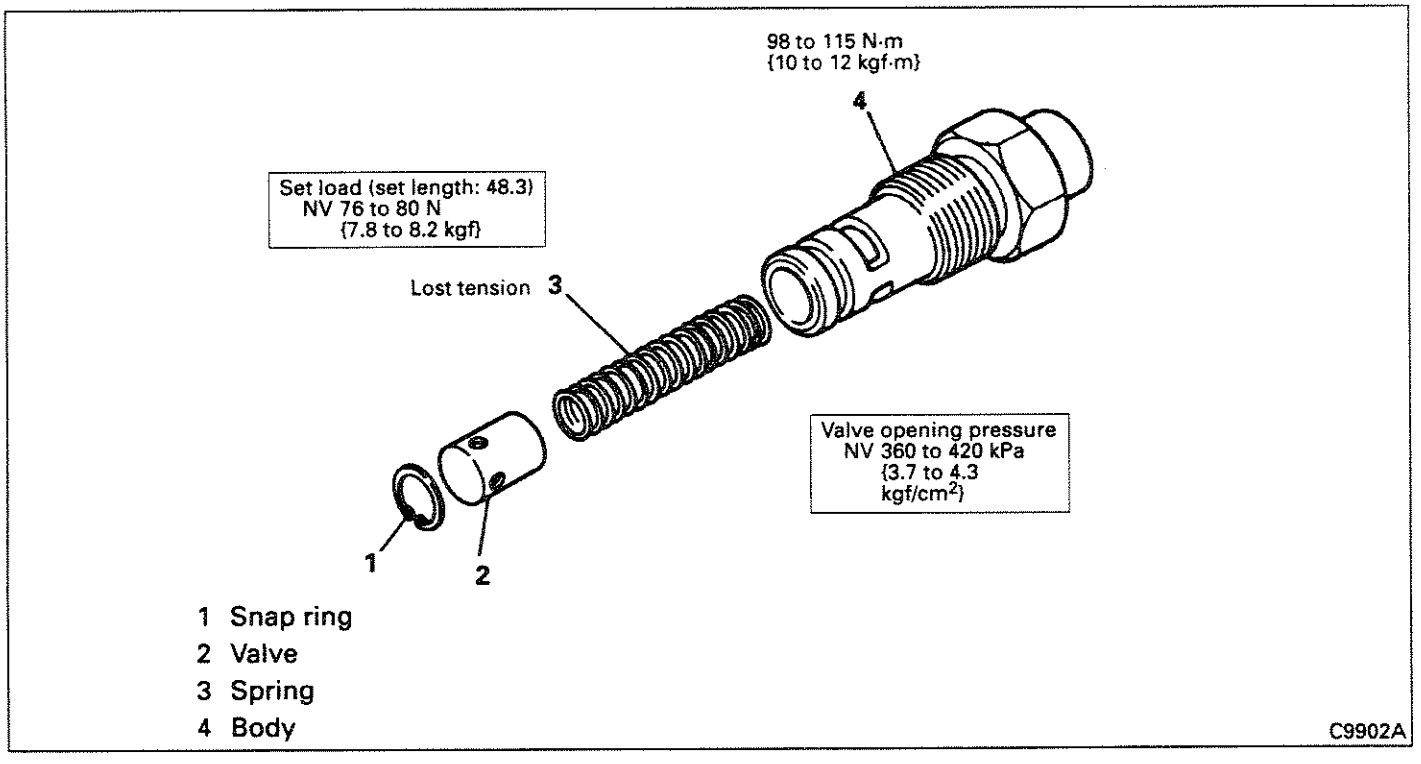

Regulator valve installation position:

6D2: Left side of crankcase

8DC: Oil cooler case

5. TROUBLESHOOTING

Symptom	Probable cause	Remedy	Ref. group
Overheating	Abnormal oil level • Oil leaks into coolant	Correct and fill to specified level	
	• Oil leaks		
	Incorrect oil viscosity • Oil out of life	Replace	
	• Fuel in oil	Change oil after repair of faulty parts	
Oil pressure does not increase	Oil pressure switch not functioning properly	Replace	
	Loaded oil filter element	Replace element	
	Loaded oil strainer, loose oil pump joint, cracked pipe	Correct or replace	
	Relief valve, bypass valve not functioning properly		
	Worn or damaged oil pump proper	Replace	
Excessive oil consumption	Oil leaks from engine	Correct or replace	Group 11 A and B
	Oil leaks from crankshaft front or rear oil seal	Correct or replace	
	Leaks to cooling system • Defective oil cooler water jacket	Correct or replace	
	Abnormal compression pressure	Check	Group 11 A and B

FUEL AND ENGINE CONTROL

CONTENTS

1. GENERAL 2
2. SPECIFICATIONS 28
3. SERVICE STANDARDS 30
3.1 Service Standards Table 30
3.2 Tightening Torque Table 32
4. SPECIAL TOOL 34
5. SERVICE PROCEDURE 35
5.1 Injection Pump Assembly 35
5.1.1 Removal and installation 35
5.2 AD Type Injection Pump 40
5.2.1 Disassembly, inspection and reassembly 41
5.2.2 Testing and adjustment 42
5.3 P Type Injection Pump 46
5.3.1 Disassembly, inspection and reassembly 47
5.3.2 Testing and adjustment 48
5.4 RSV Type Governor 52
5.4.1 Disassembly, inspection and reassembly 53
5.4.2 Testing and adjustment 55
5.5 RFD Type Governor 61
5.5.1 Disassembly, inspection and reassembly 62
5.5.2 Testing and adjustment 64
5.6 Feed Pump 73
5.6.1 Disassembly, inspection and reassembly 73
5.6.2 Tests 75
5.7 SA Type Automatic Timer 75
5.7.1 Removal and inspection 76
5.7.2 Installation and adjustment 77
5.8 SP Type Automatic Timer 78
5.8.1 Removal and inspection 78
5.8.2 Installation and adjustment 79
5.9 SPG Type Automatic Timer 80
5.9.1 Removal and inspection 80
5.9.2 Installation and adjustment 81
5.10 Bleeding of Fuel System 82
5.11 Inspection and Adjustment after Installing the Injection Pump 83
5.11.1 Inspection and adjustment of fuel injection start timing 83
5.11.2 Inspection and adjustment of minimum and maximum no-load speeds 84
5.12 Pump Drive Case 86
5.12.1 Removal and installation 86
5.12.2 Disassembly and inspection 86
5.12.3 Reassembly 87
5.13 Injection Nozzle 89
5.13.1 Removal and installation 89
5.13.2 Disassembly 89
5.13.3 Cleaning and inspection 91
5.13.4 Reassembly and adjustment <1-spring nozzle> 92
5.13.5 Reassembly and adjustment <2-spring nozzle: except identification mark "2D"> 93
5.13.6 Reassembly and adjustment <2-spring nozzle: identification mark "2D"> 99
5.14 Hydraulic Governor (RHD6-type for 8DC9) Inspection and Adjustment 104
5.15 Fuel Filter 107
5.16 Water Separator 108
6. TROUBLESHOOTING 109

1. GENERAL

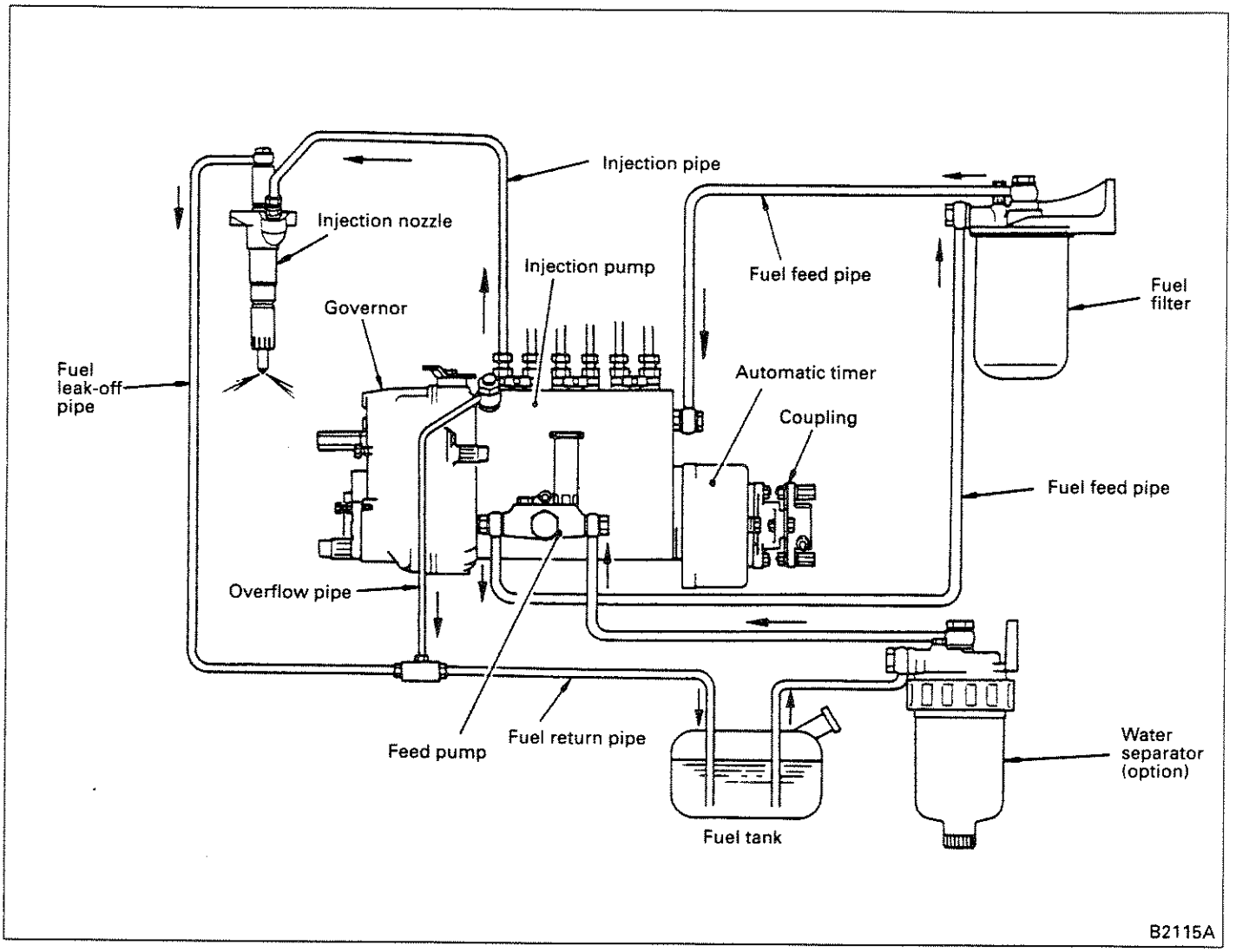

The fuel system consists of the injection pump general assembly (injection pump proper, governor, automatic timer, feed pump and coupling), fuel filter, water separator, injection nozzle, fuel leak-off pipe, etc.

The injection pump is connected with the air compressor or pump drive case by a coupling and driven at one-half the engine speed.

(1) Injection pump proper

(a) Injection pump

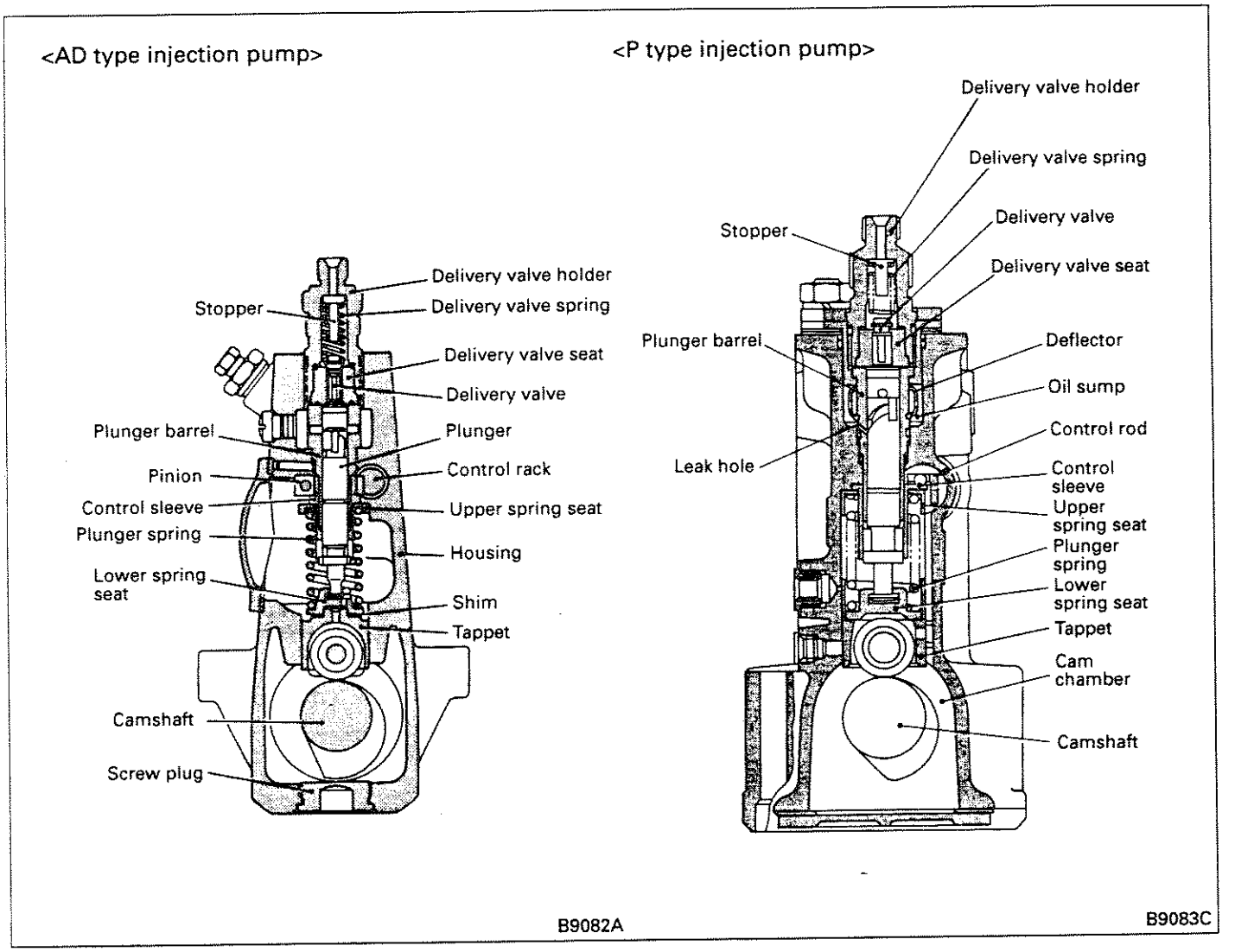

The camshaft driven at half the engine speed is supported by taper roller bearings at both ends. The camshaft has a cam for operating the plunger and a cam for operating the feed pump.

A tappet operating with the pump housing as the guide is in contact with the camshaft. The tappet changes the rotary motion of the cam to up-and-down motion which is transmitted to the plunger.

The P type injection pump offers the following features.

1) The pump housing is a totally enclosed type.
2) The plunger barrel has an oblique hole made to return the fuel that has leaked to the oil sump to minimize the leakage of the fuel into the cam chamber.
3) To prevent the fuel in the oil sump from leaking into the cam chamber, an O-ring is provided on the outer circumference of the plunger barrel, thereby maintaining its tightness.
4) A deflector is provided on the outer circumference of the plunger barrel to prevent erosion of the pump housing that may be caused by counter flow of fuel at the end of an injection.

(b) Plunger and plunger barrel

The plunger has an obliquely cut groove (lead) and a vertical groove as illustrated. The plunger barrel has two fuel suction/discharge ports.
Fuel fed into the injection pump is sent under pressure by the camshaft rotation, or the reciprocating motion of the plunger as follows.

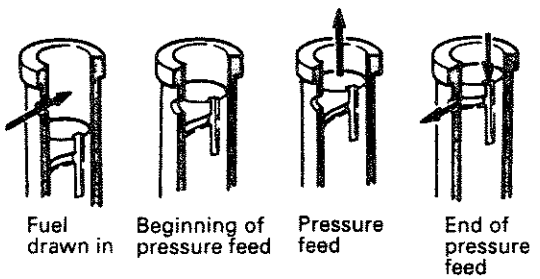

B2204A

When the plunger moves down from the top dead center and opens the suction/discharge ports in the plunger barrel, fuel is not only drawn into the barrel by a vacuum created during the plunger's downward stroke but also sent into the barrel under pressure by the feed pump.
On the upward stroke, the plunger begins to compress fuel as it completely closes the suctional discharge ports in the plunger barrel.
With the plunger further going up and with the fuel pressure increasing, the plunger overcomes the force of delivery valve spring, pushing up the delivery valve. This causes fuel to be sent under pressure through the injection pipe to the injection nozzle.

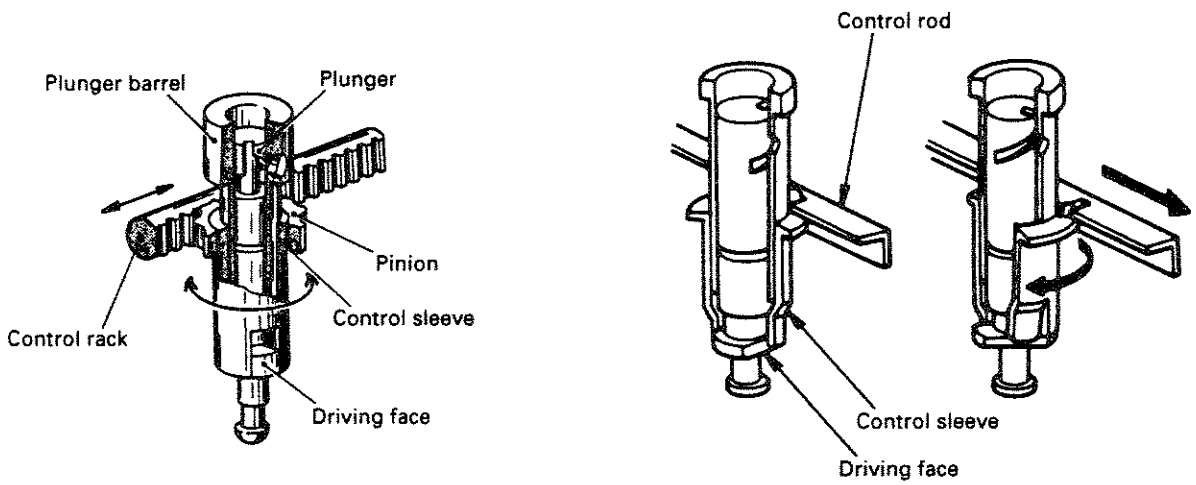

B2224A B2206A

The amount of fuel injected will be changed according to the engine operating loads by turning the plunger a given angle to increase or decrease the effective stroke. To be more precise, operation of the control lever or governor moves the control rack (or control rod) to the right or left, which results in the control sleeve being turned. The bottom end of the control sleeve meshes with the driving face of the plunger; thus, as the control sleeve rotates, the plunger also rotates to vary the effective stroke, thereby increasing or decreasing the amount of fuel injected.

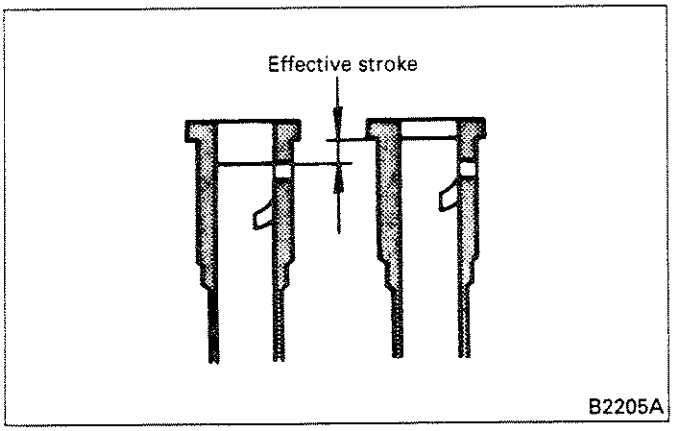

As the plunger rises and its oblique groove (the reed) meets the inlet/outlet hole, fuel flows into the plunger's vertical groove and is expelled from the inlet/outlet hole. No pressure feed takes place thereafter, regardless of how much the plunger rises.
The stroke length during which pressure feed takes place (from when the plunger closes the plunger barrel's inlet/outlet hole until the plunger's oblique groove opens them) is known as the effective stroke.

(c) Delivery valve

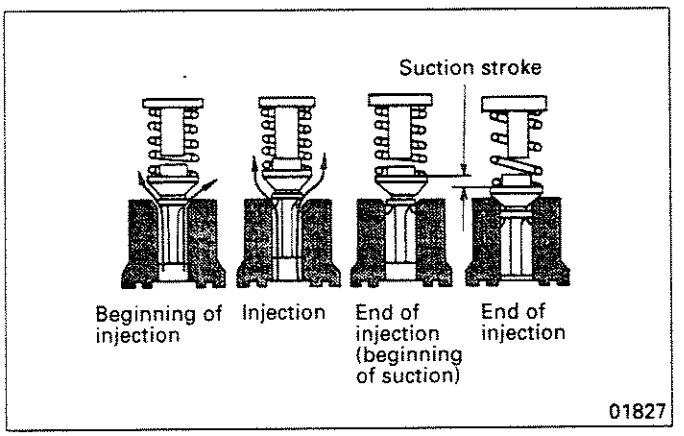

The fuel highly pressurized by the plunger pushes the delivery valve up and gushes out. When delivery of the fuel under pressure by the plunger is completed, the delivery valve is pushed back by the delivery valve spring and closes the fuel passage to prevent counter flow of the fuel.

The delivery valve is further brought down until it is held against the seat surface tightly. The amount of fuel corresponding to the stroke during the period is drawn back from above to instantly lower the residual pressure in the line between the delivery valve and nozzle. The draw-back effect improves the cutting of fuel from the nozzle and prevents after-injection dripping.
A delivery valve stopper, provided on the top of the delivery valve spring, limits the lift of the delivery valve to prevent the surging of the valve during high speed operation. It also reduces the dead volume between the delivery valve and nozzle and stabilizes the injection rate.

(d) Overflow valve

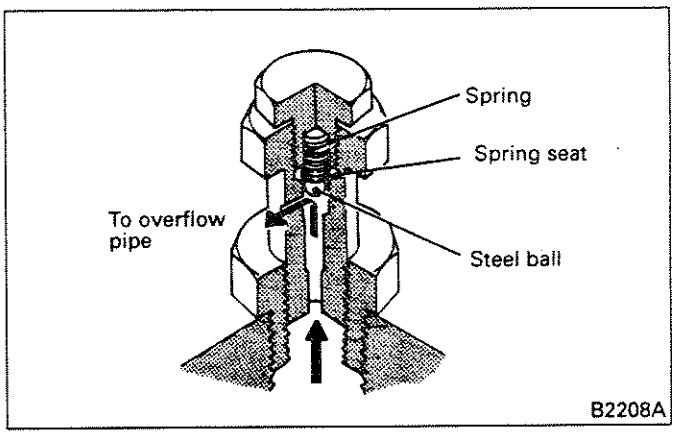

When the fuel pressure in the injection pump exceeds a predetermined pressure, the steel ball in the overflow valve is pushed up to let the fuel flow out from the injection pump and return to the fuel tank, thereby stabilizing the fuel temperature and temperature distribution in the injection pump and maintaining the injection rate into each cylinder constant.

(2) Governor

The construction and operation of the governor are the same regardless of the applicable model of the injection pump. This section describes the governor based on the AD type injection pump.

(a) RSV type governor

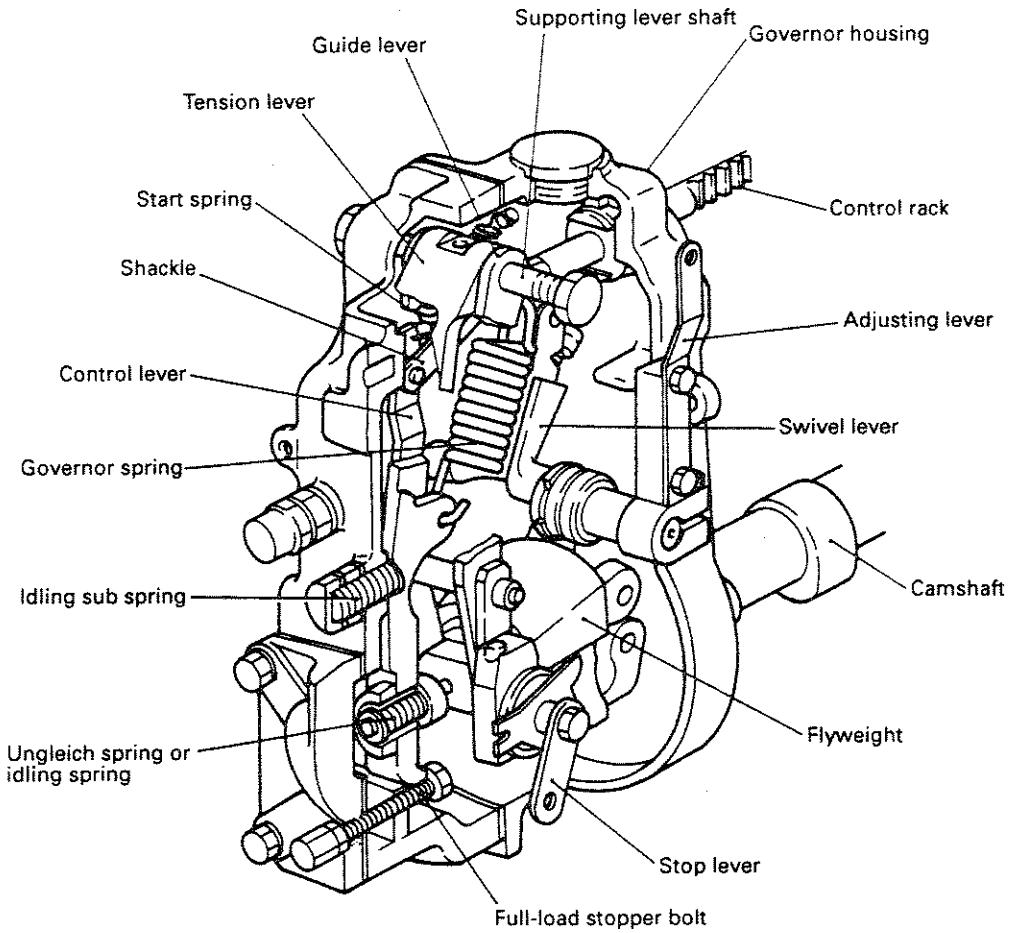

B2657B

The RSV type governor is a centrifugal type all-speed governor coupled to the camshaft of the injection pump. The governor not only controls the maximum and minimum speeds but also automatically controls the engine speed at any intermediate speed position.

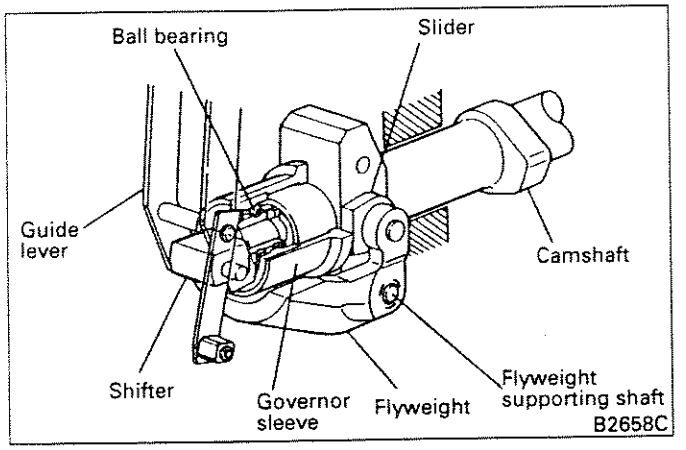

The governor, as shown, consists of flyweights mounted to the injection pump camshaft. When the flyweights turning on the flyweight supporting shaft open outward, the slider mounted to the end of flyweight arm pushes the end of the sleeve in the axial direction. The governor sleeve, being made integral with the shifter through a bearing, moves only in the axial direction. The shifter is fixed to the end of the guide lever with a pin to prevent its rotation.

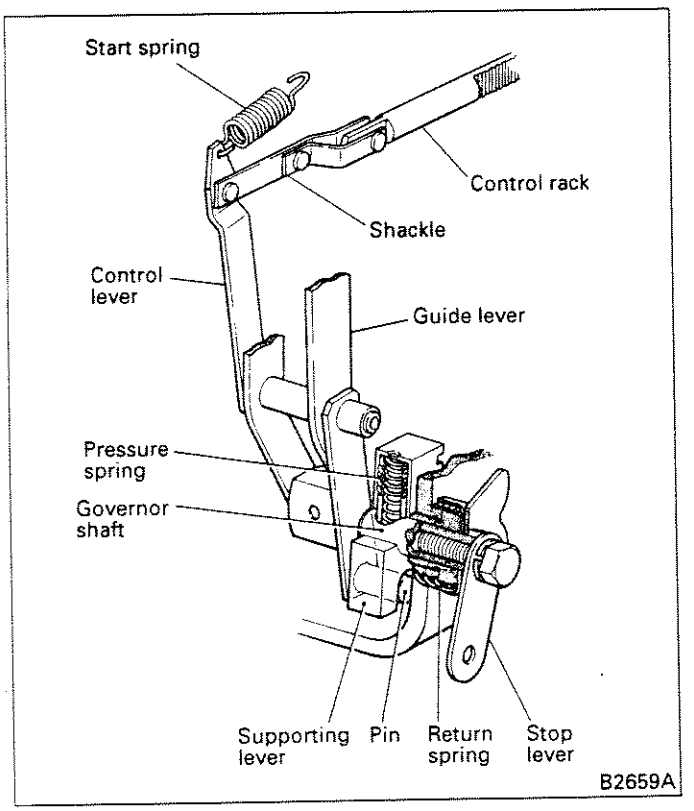

The control lever is mounted to the middle of the guide lever by the shaft with the bottom end as the fulcrum, whereas the top of the lever is coupled through the shackle to the control rack.

The start spring, attached to the top end of the control lever, always pulls the control rack in the direction that fuel is increased.

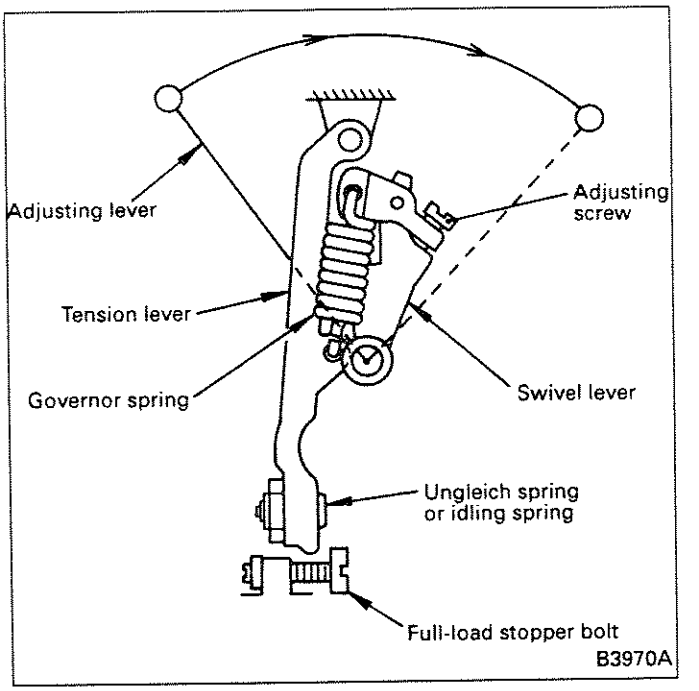

The turning shaft of the swivel lever is fitted into the bushing of the governor cover and its center is eccentric with respect to the mounting position of the governor spring installed to the tension lever. The governor spring is installed to the end of the swivel lever.

When the governor spring receives tension, the bottom end of the tension lever touches the adjustable full-load stopper bolt.

When the angle of the adjusting lever is changed, the angle of the swivel lever is also changed and the tension of the governor spring changed. This is because the turning center of the swivel lever and the mounting position of the governor spring installed to the tension lever are eccentric to each other as mentioned above.

An adjusting screw is also mounted to the swivel lever. Adjustment of the screw changes the tension of the governor spring, thereby making it possible to adjust the speed regulation.

An Ungleich spring (or idling spring) is provided in the bottom portion of the tension lever. Adjust the tension of the spring by adding or removing shims.

An idling sub spring adjustable from outside is provided in the middle of the governor cover. During

idling, the spring always keeps in contact with the tension lever to maintain a constant idling speed.
The stop lever, mounted through the supporting lever to the bottom end of the control lever, returns the control rack to the stop position with a slight pressure irrespective of the adjusting lever position.

1) Start of engine

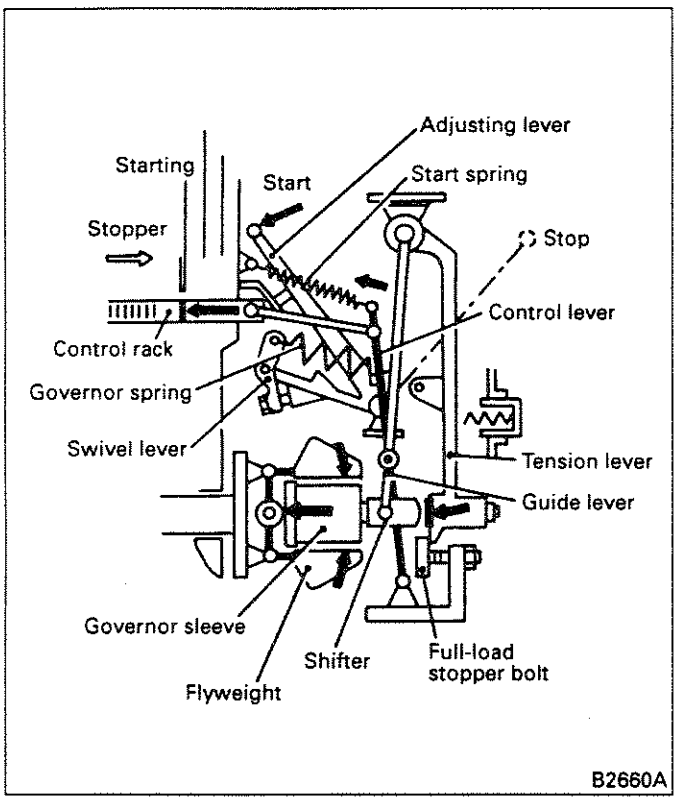

When the adjusting lever is moved to the start position (until it touches the maximum speed stopper), the swivel lever which moves with the adjusting lever pulls the governor spring and moves the tension lever until it touches the full-load stopper bolt.
At that time, the flyweights are stationary, and the start spring with weak tension pulls the control lever in the direction that fuel is increased.
At the same time, the shifter and governor sleeve push the flyweight slider to the left.
As the result, the tension lever and shifter are spaced that much apart, and the corresponding amount of fuel is supercharged to facilitate starting.

2) Idling control

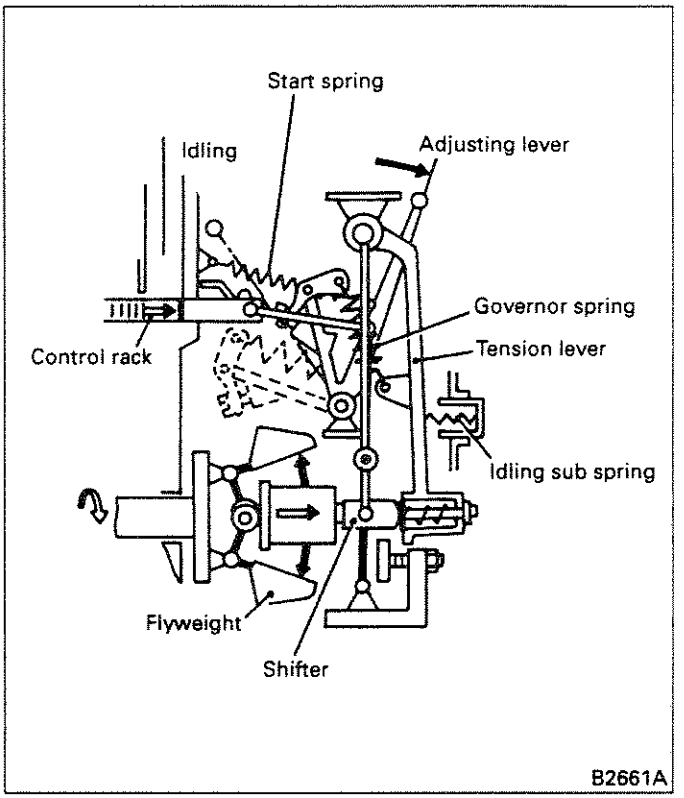

Once the engine is started and the adjusting lever returned to the idling position, the tension of the governor spring is drastically reduced.
Now the flyweights can move outward even at a low speed, so the tension lever is pushed back until it touches the idling sub spring and places the control rack at the idling position. In this state, the centrifugal force of the flyweights and the weak-state governor spring and idling sub spring achieve balance and maintain smooth idling.
When the speed falls, the centrifugal force decreases, the flyweights move inward, and the idling sub spring pushes the tension lever to the left and moves the control rack in the direction that fuel is increased.
If the speed falls radically, the start spring with weak tension acts and moves the control rack in the direction that fuel is increased to maintain the idling speed.

3) Maximum speed control

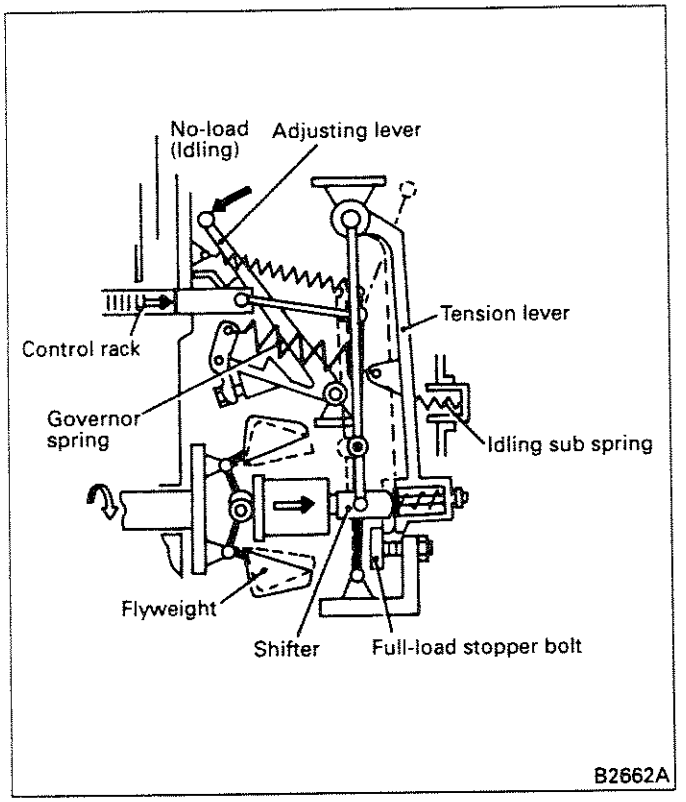

When the adjusting lever is moved to the full-load position, the tension of the governor spring is increased and pulls the tension lever until it touches the full-load stopper bolt.

When the engine exceeds the specified speed, the centrifugal force of flyweights becomes larger than the force of the governor spring pulling the tension lever. So the tension lever is moved to the right and moves the control rack in the direction that fuel is reduced, thereby preventing the engine from exceeding the specified speed.

If the speed further increases, the centrifugal force of flyweight increases and pushes the tension lever to the right and also compresses the idling sub spring to pull the control rack back to the no-load maximum speed position, thereby preventing over-speed operation of the engine.

The RSV type governor controls the entire speed range from idling to maximum speed. If load increases or decreases at a certain speed determined by the position of the adjusting lever, the governor automatically functions and maintains the engine speed constant at all times.

4) Ungleich operation

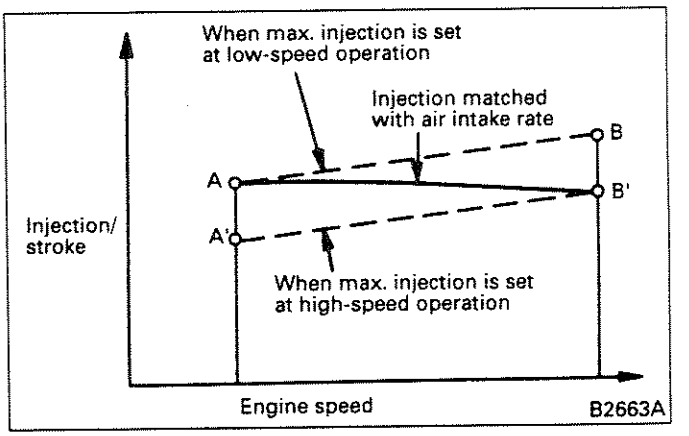

The air intake rate of the engine falls as the engine speed increases. The injection pump, on the other hand, increases the per-stroke injection as the speed increases, even with the control rack at the same position.

Therefore, if full-load is set at point A to derive enough output at low speeds, the injection will reach B as the speed increases, and the engine will produce black smoke.

If full-load is set at point B' to prevent black smoke, the low speed injection will come down to A', allowing combustion of more fuel.

So the Ungleich device accomplishes the function of setting full-load at point A to derive the largest possible torque in the low speed range, and changing it to adjust the injection to point B' in the high speed range.

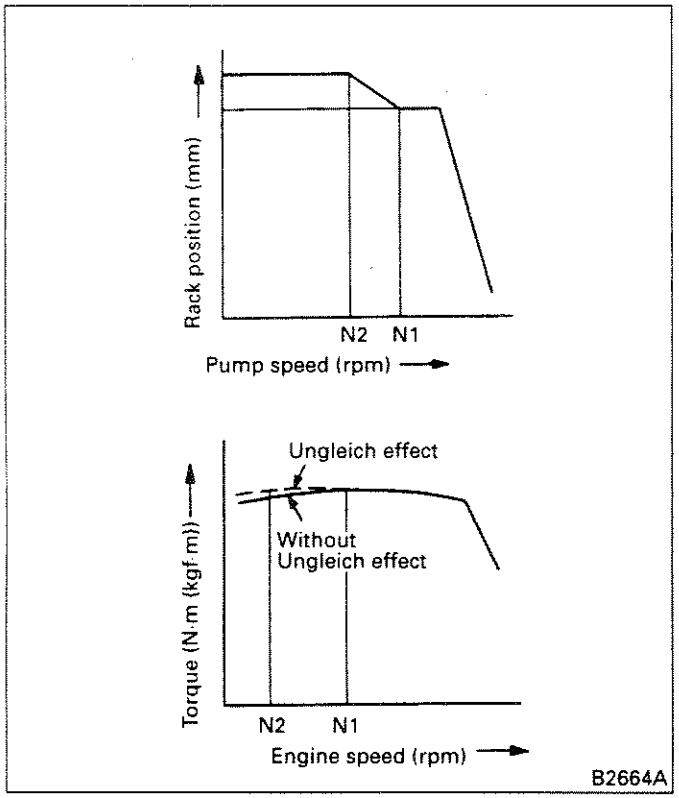

When the engine speed is low and the centrifugal force of flyweight smaller than the pressure of the Ungleich spring, the shifter is moved as much as the Ungleich stroke to the left, so the control rack moves in the direction that fuel is increased to increase the torque of the engine at low speeds.

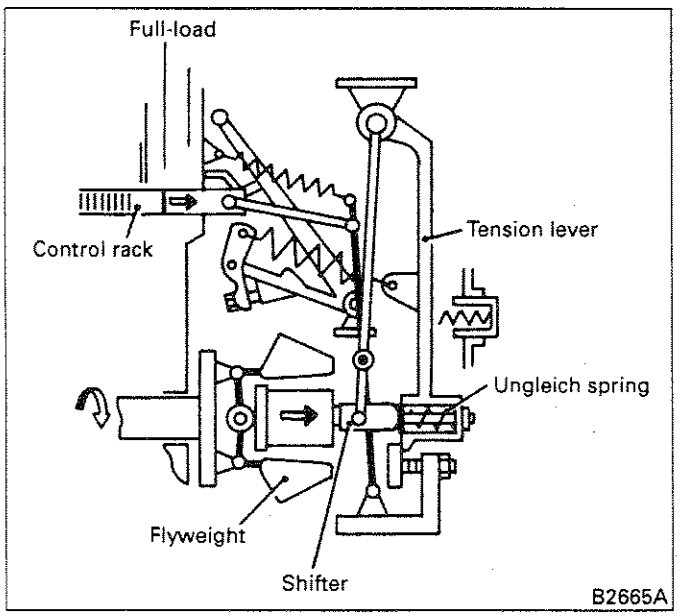

As the engine speed increases, the centrifugal force of flyweight increases. If it becomes larger than the pressure of the Ungleich spring, the Ungleich spring is slowly compressed before the start of high speed control, and the control rack moves in the direction that fuel is reduced. The Ungleich stroke is completed at the position where the shifter directly touches the tension lever.

5) Stopping of engine

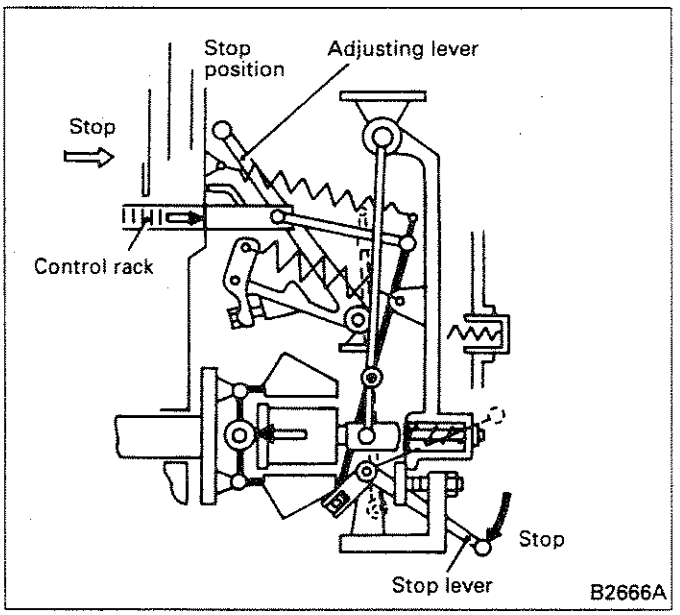

When the stop lever is moved to the stop position, the control rack is moved to the stop position to stop the engine regardless of the position of the adjusting lever.

6) Operation of torque spring

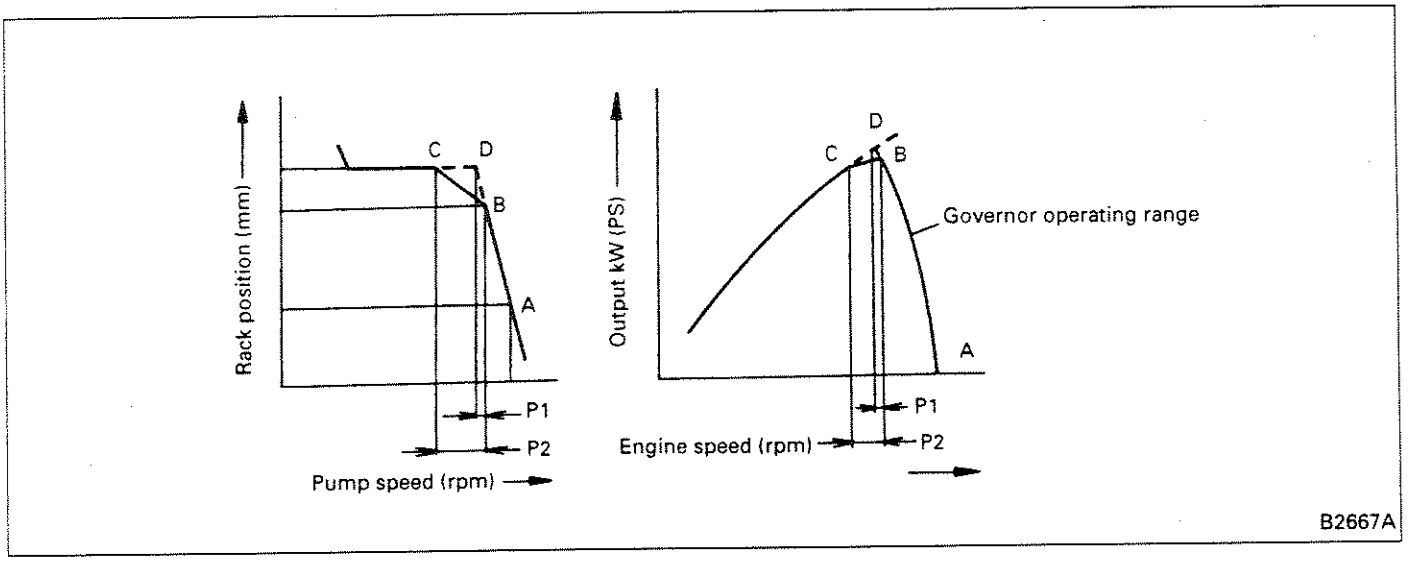

Construction machinery engines are often subjected to a large load during operation, and reduced speeds often lead to stalls. To prevent this, a torque spring is provided.

When the adjusting lever is fixed in the lever set position, a sudden increase of load, if no torque spring is provided, will move the control rack along the B-D curve as the speed falls. The rotational displacement at the time may be expressed as P_1.

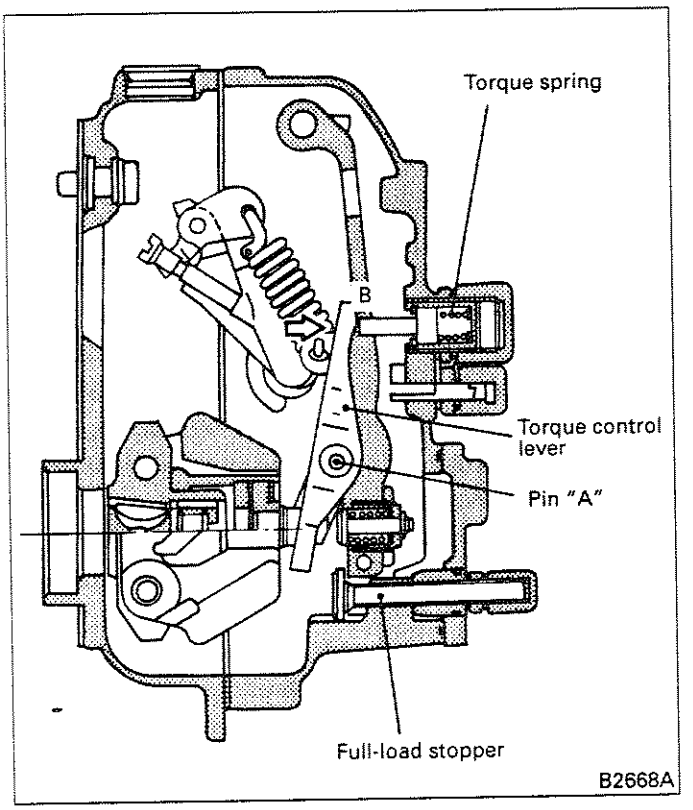

If a torque spring is provided, the control rack moves along B-C, and the rotational displacement at the time may be expressed as P_2. Therefore, large changes occur in P_2 and engine speed, and because of increased fuel injection, the engine torque increases, and large combustion noise warns the operator of the increased load, enabling him to take proper action to prevent stopping the engine.

In an abrupt increase of load occurs when the engine is running at continuous rating, the engine speed falls. So the flyweights are moved inward and the tension lever pulled to left by the control spring, causing the control rack to move in the direction that fuel is increased.

At the time, the tension lever pin pushes the bottom of the torque control lever, and the lever moves with the pin "A" as the fulcrum, whereas the portion "B" is pushed to right. As the result, the torque spring performs the function of reducing movement of the tension lever.

(b) RFD type governor

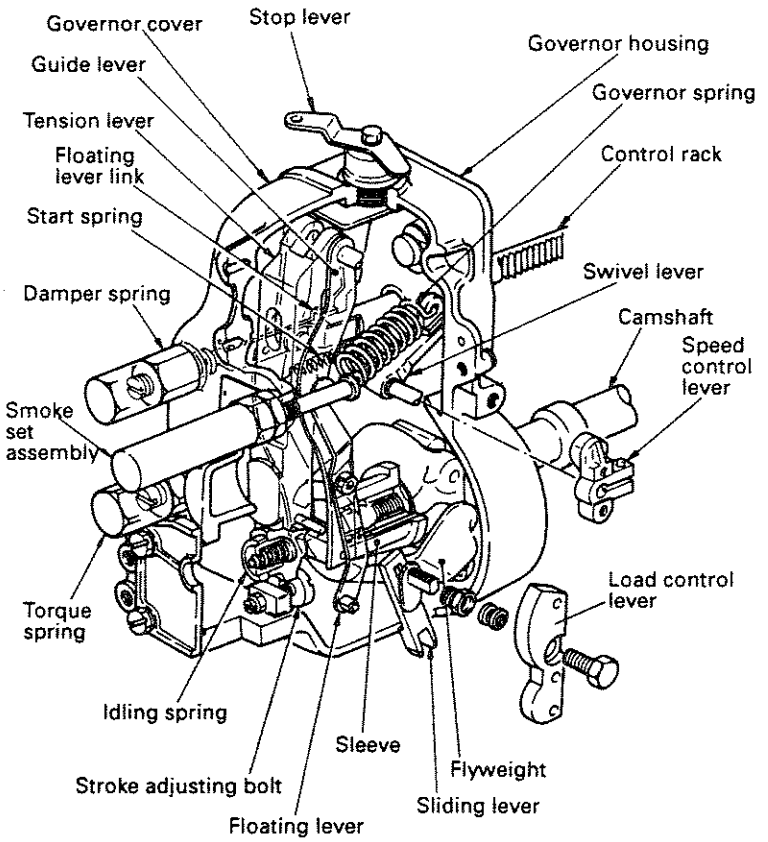

B2682B

The RFD type governor is a minimum-maximum governor which controls only the minimum and maximum speeds.

The RFD type governor make it possible to increase or reduce fuel by the load control lever which operates the control rod. Any desired speed can be set as a displacement of the speed control lever changes the tension of the governor spring.

Because of the construction described above, the RFD governor can be operated as an all-speed governor by holding the load control lever in the full position and operating the speed control lever.

Flyweights are mounted on the injection pump camshaft. Each of the flyweights pivots about a pin press-fitted in the flyweight holder. When the flyweights move out, the slider fitted to the end of the flyweight arms pushes the sleeve end face axially. The sleeve which contacts the flyweight slider is coupled to the shifter by a snap ring. The guide lever suspended from the tension lever shaft holds the shifter, preventing it from turning.

The guide lever has an intermediate shaft, on each side of which there is a floating lever mounted.

A block is press-fitted in the bottom end of one floating lever and this block is fitted in the bottom of the sliding lever. The load control lever is fitted to this sliding lever through an eccentric shaft. The floating lever can be moved by operating the load control lever. At the upper end of the floating lever placed on the other side via a shaft, there is an injection pump control rack fitted via a floating lever link. A start spring is hooked at the lower end of the floating lever and the other end of the start spring is hooked at the spring eye on the governor housing side.

The tension lever is suspended from the tension lever shaft from which the guide lever is suspended. A governor spring is fitted across this tension lever and the swivel lever. Its tension is determined by the speed control lever mounted on the swivel lever shaft. Within

normal speed ranges, therefore, the lower end of the tension lever is always in contact with the stroke adjusting bolt.
A pin is press-fitted in the side of the lower end of the tension lever. It fits into the groove in the upper part of the sliding lever. During high speed control, therefore, a greater lever ratio is obtained from the linkage formed by the pin, sliding lever, and floating lever. Built into the lower end of the tension lever is the idling spring that provides low speed control.

1) Control of engine start and idling

The engine stop lever is fitted to the top of the governor, that moves the control rack to the non-injection position to stop the engine. The cancel spring is installed to prevent excessive force from being applied to the control rack at this time.
Mounted on top of the governor cover is the smoke set assembly. It functions to ensure good starting by increasing the amount of fuel injected at starting and improve smoke condition in the practical full-load low speed range.

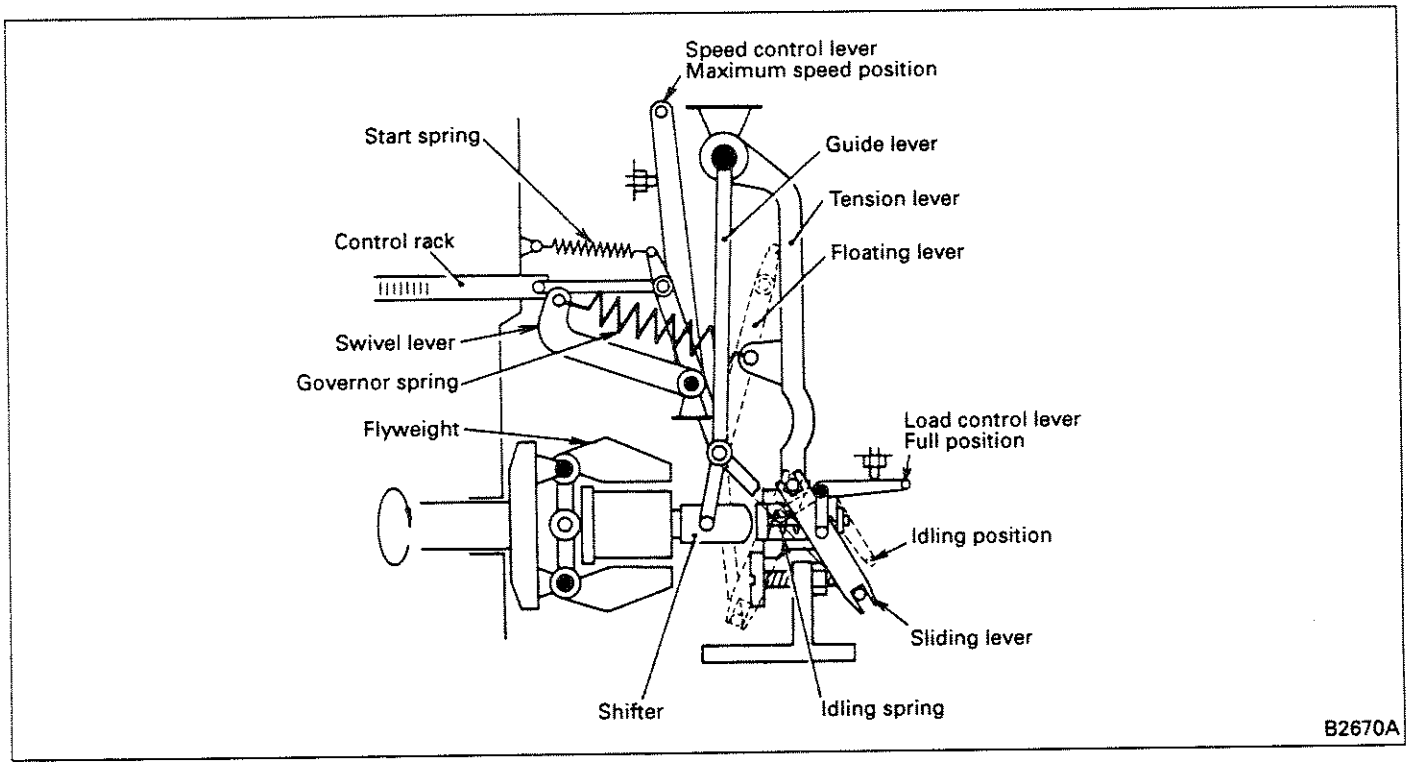

When the engine is not running, the flyweights are in the closed position, pushed by the governor spring, idling spring, and start spring. If, in this condition, the load control lever is moved all the way to the full position (in the direction of greater fuel delivery), the start spring and idling spring cause the control rack to move to a point which is beyond the full-load position and provides the maximum amount of fuel injected, thus making it easier to start the engine.
When the load control lever is returned to the idling position after the engine has started, the flyweights increase or decrease their centrifugal force as the engine speed changes. In the idle speed range, the centrifugal force is such that it just compresses the idling spring. The centrifugal force of the flyweights balances the combined force of the idling spring and start spring, which keeps the control rack at a given position. This results in the engine running at smooth idle speed.
If the engine speed increases at this time, the centrifugal force of the flyweights increases causing the flyweights to move out to push the shifter to the right. As a result, the guide lever and floating lever are moved, which in turn moves the control rack in the direction of smaller fuel delivery (to the right). If the engine speed decreases, on the other hand, the control rack is moved in the direction of greater fuel delivery. The governor controls the amount of fuel injected in this way to stabilize the engine at idle speed.

2) Normal speed operation

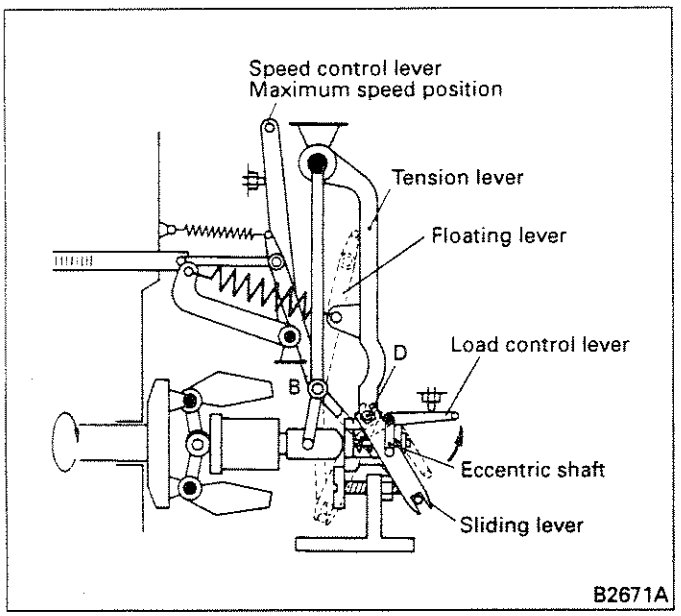

If the load control lever is moved in the full direction (for greater fuel delivery), the eccentric shaft coupled to the load control lever causes the sliding lever to pivot about pin D fitted in the bottom of the tension lever. At the same time, the floating lever pivots about point B to push the control rack in the direction of greater fuel delivery, which results in the engine speed increasing.

When the engine speed reaches a point over the idling control range, the idling spring is completely compressed in the tension lever, causing the shifter to be in direct contact with the tension lever. The tension lever, however, is in contact with the stroke adjusting bolt by the tension of the governor spring which is tightened by the speed control lever. Since the centrifugal force of the flyweights is small in the normal speed range, the tension lever is unable to move. This means that point B can not move either, and the operation of the load control lever is directly transmitted through the eccentric shaft, sliding lever, and floating lever to the control rack, thereby increasing and decreasing the amount of fuel injected.

3) Control of maximum speed

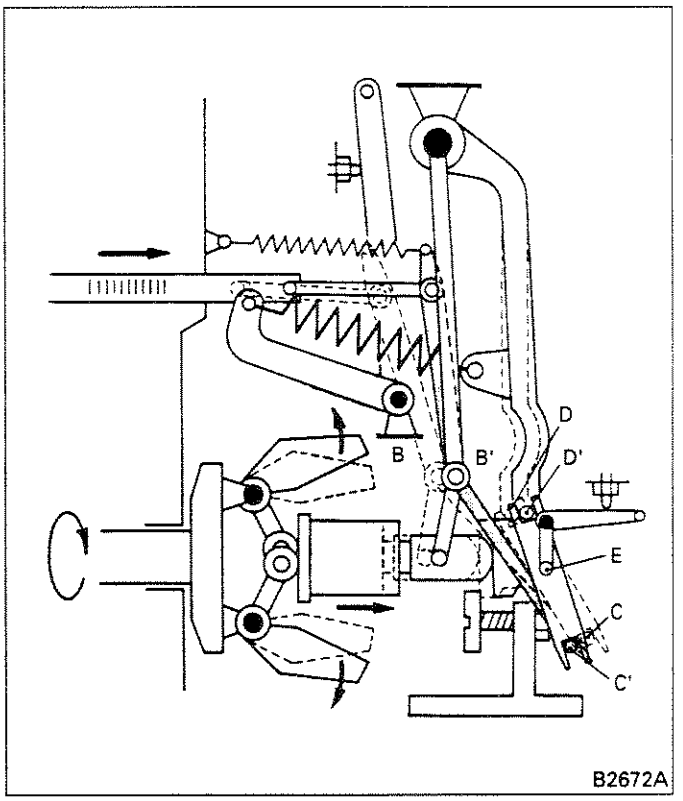

As the engine load varies and engine speed reaches a predetermined maximum speed, the centrifugal force of the flyweights overcomes the governor spring tension, causing the flyweights to start moving out. This motion results in the shifter and tension lever being moved to the right. Then, point B is moved to B′ and point D in tension lever to D′, which prevents the engine speed from exceeding the predetermined maximum level.

If this governor is used as an all-speed governor, the engine speed is varied by operating the speed control lever with the load control lever fixed at the full position. That is, a given engine speed is maintained as the speed control lever is tilted; if load changes, however, the governor automatically controls to keep the given speed. For example, suppose the speed control lever is tilted to a position which provides the maximum output (where it contacts the maximum speed stopper bolt). When the engine speed increases in this condition, the centrifugal force of the flyweights becomes greater.

As the force becomes greater than the force of the governor spring which pulls the tension lever, the flyweights start moving out. This motion of the flyweights causes the shifter and tension lever to be moved to the right. At the same time, point B is moved to B', point D to D', and point C to C'. This results in the control rack being pulled in the direction of smaller fuel delivery, thus reducing the engine speed.
If load increases to cause the speed to decrease, the centrifugal force of the flyweights becomes smaller than the governor spring tension. Then, point B' is moved to B, point D' to D, and point C' to C. This results in the control rack being moved in the direction of greater fuel delivery.
The governor automatically activates as load changes to maintain a given speed at all times.

4) Start booster (smoke set assembly)

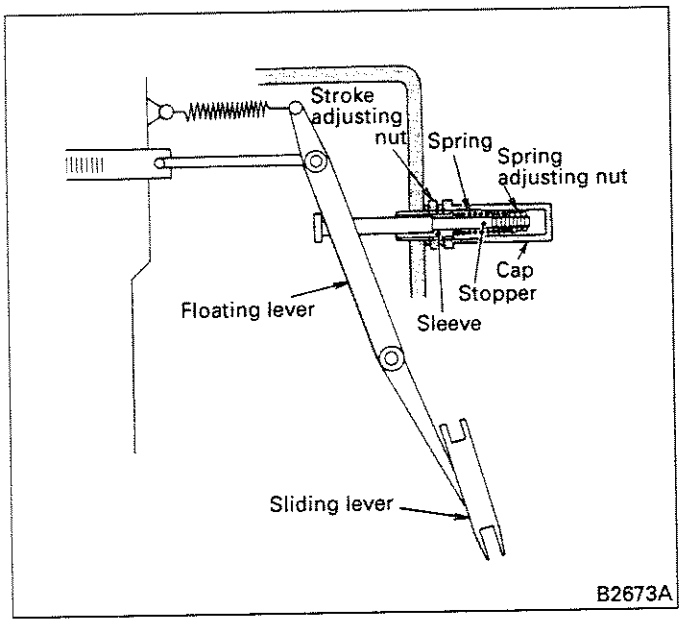

The smoke set assembly installed to the rear of the governor has a spring with setting force and a stopper as functional parts. It also has sleeve, stroke adjusting nut, spring adjusting nut and cap.

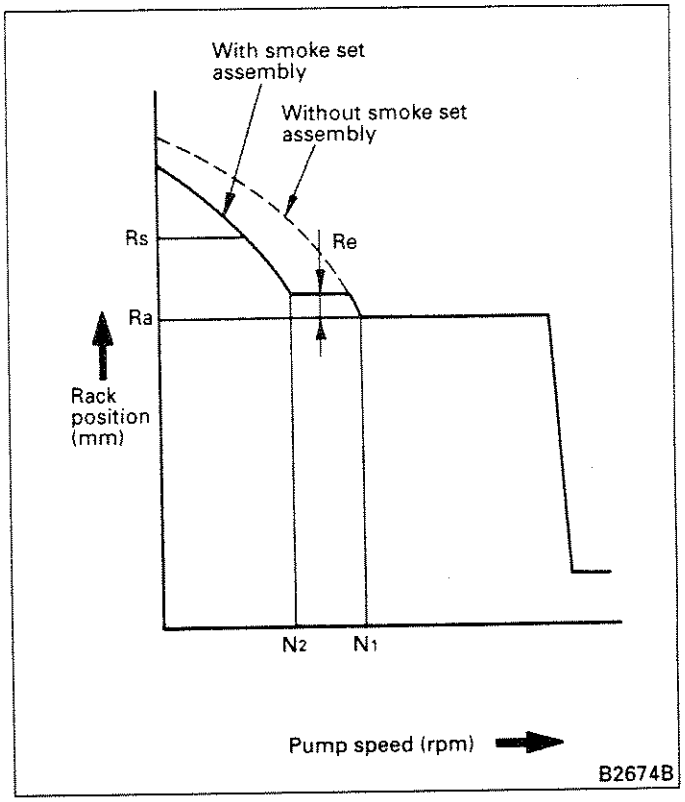

As indicated by the governor characteristics shown above, when without the smoke set assembly, the shifter and floating lever are pushed back by the idling spring force, moving the control rack toward fuel increasing direction when pump speed reaches N_1. Namely, N_1 is the smoke limit in this case.
When with the smoke set assembly, the spring force of the smoke set assembly overcomes that of the idling spring so that the floating lever motion is inhibited until the speed reaches N_2. Thus, the smoke limit decreases from N_1 to N_2.
It is also possible to secure rack position Rs needed at time of start.

5) Engine stop lever

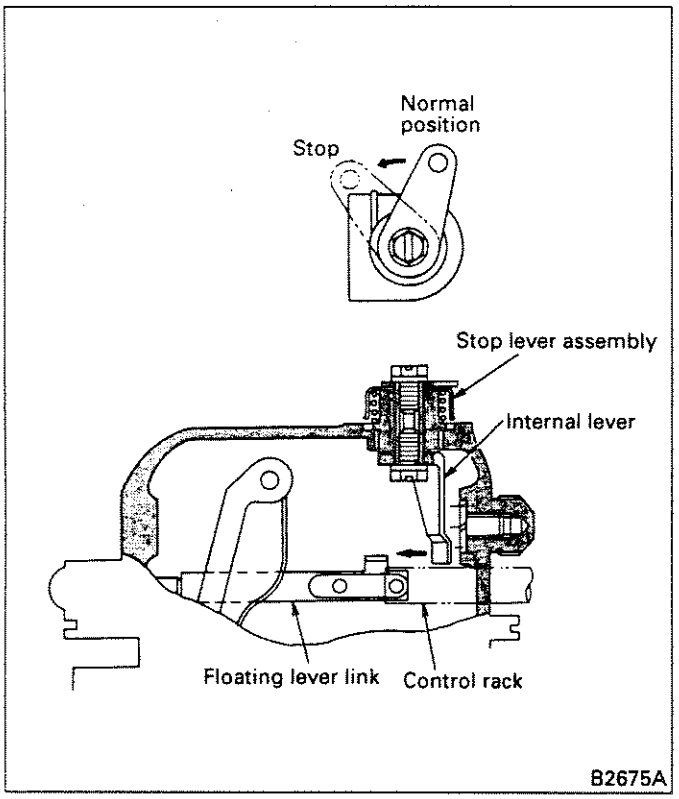

To stop the engine, the stop lever on top of the governor must be operated to cut off the fuel.
The stop lever is cable-connected to the engine stop button on the driver's seat. The stop lever is operated by pulling the button. When the stop lever is rotated, the internal lever pushes the tab on the floating lever link, forcing the control rack to the non-injection position to stop the engine. The stop lever returns to the normal position by the reaction of a built-in spring.

(3) Feed pump

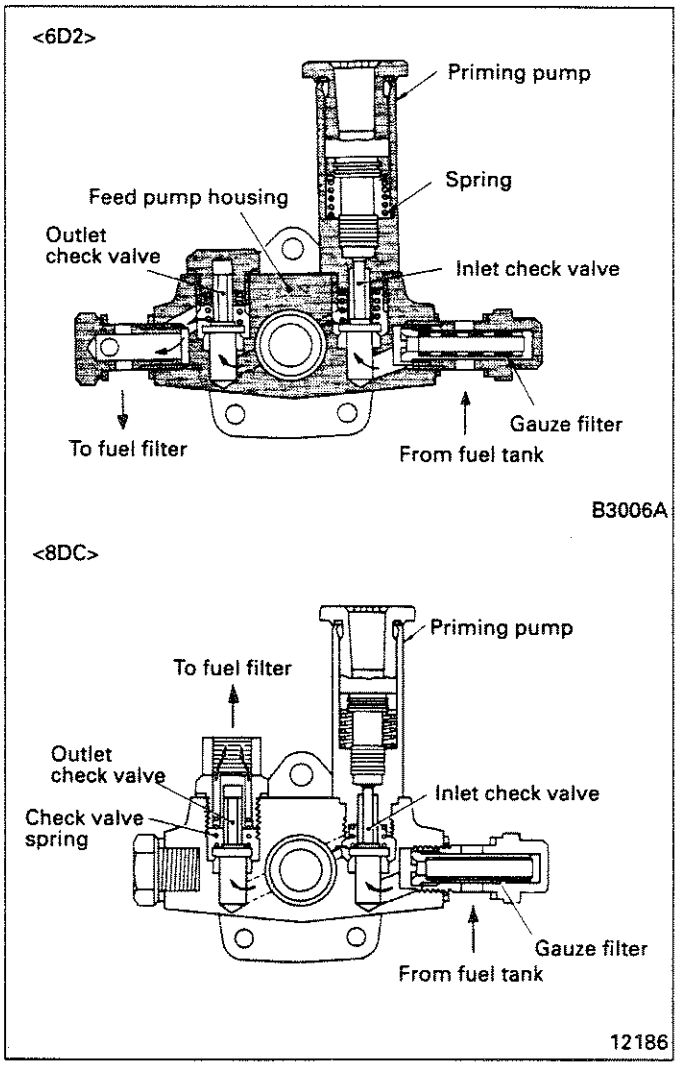

Supply of fuel to the injection pump proper is accomplished by the feed pump mounted to the side of the injection pump proper and driven by the cam of the injection pump camshaft provided for the purpose.
The priming pump mounted to the feed pump makes it possible to lift fuel manually when the engine is stationary.

(a) Suction stroke

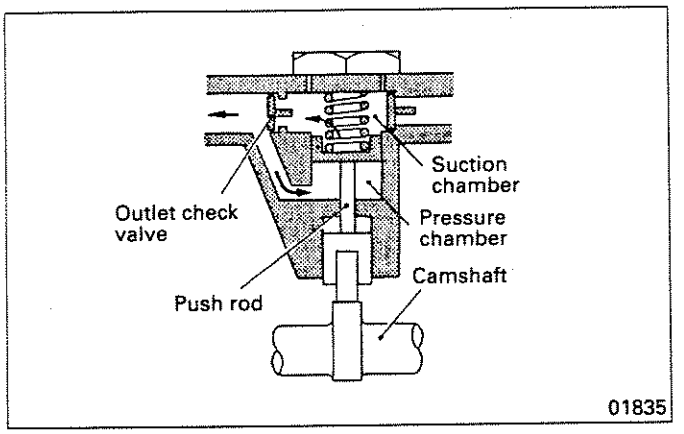

When the camshaft of the injection pump forces the push rod up, the fuel in the suction chamber is compressed and opens the outlet check valve. Most of the fuel forced out is drawn into the pressure chamber above the position.

(b) Pressure feed stroke

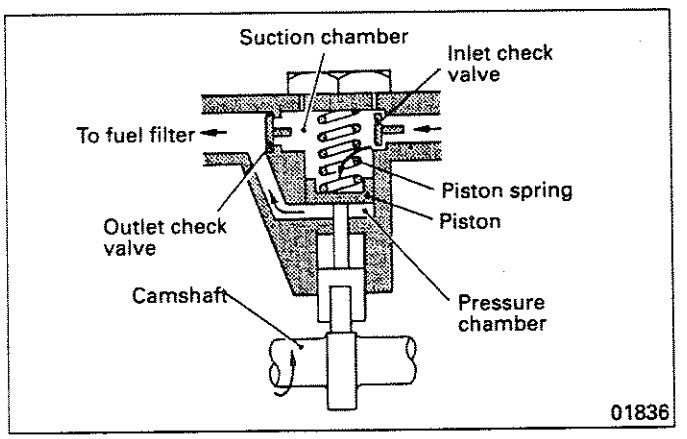

When the cam, moved away by rotation of the camshaft, ceases to push up, the piston is pushed back by the pressure of the piston spring and forces out the fuel from the pressure chamber and forces it into the fuel filter.

At the time, the outlet check valve closes, and the inlet check valve opens, so the fuel is drawn into the suction chamber.

(c) Stop

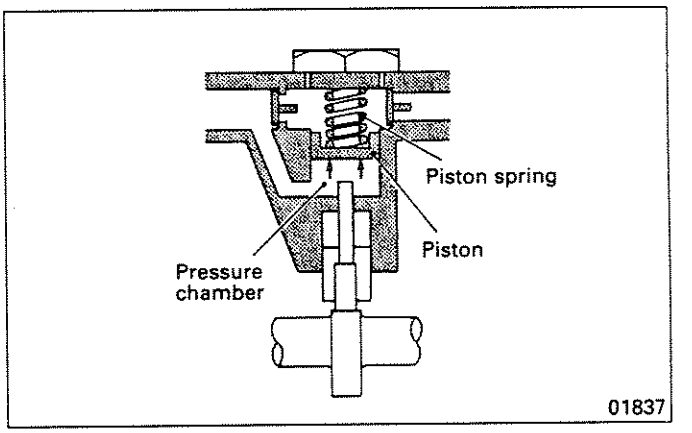

When the pressure in the pressure chamber exceeds specification, the piston cannot be brought back by the pressure of the piston spring and stops the pump function. So the pressure in the fuel filter is adjusted not to rise more than necessary.

(4) Automatic timer

The interval between fuel injection into the cylinder and its ignition is called the ignition delay interval. The ignition delay interval is constant regardless of the engine speed. If the ignition timing is always constant, changes in the engine speed will vary the relation between the piston position and ignition timing, making it impossible to obtain the best engine performance. To maintain the relation between the piston position and ignition timing constant at all times, the injection timing must be changed to match the engine speed.

The automatic timer is a device which automatically changes the injection timing according to the engine speed.

(a) SA-type automatic timer <6D22>

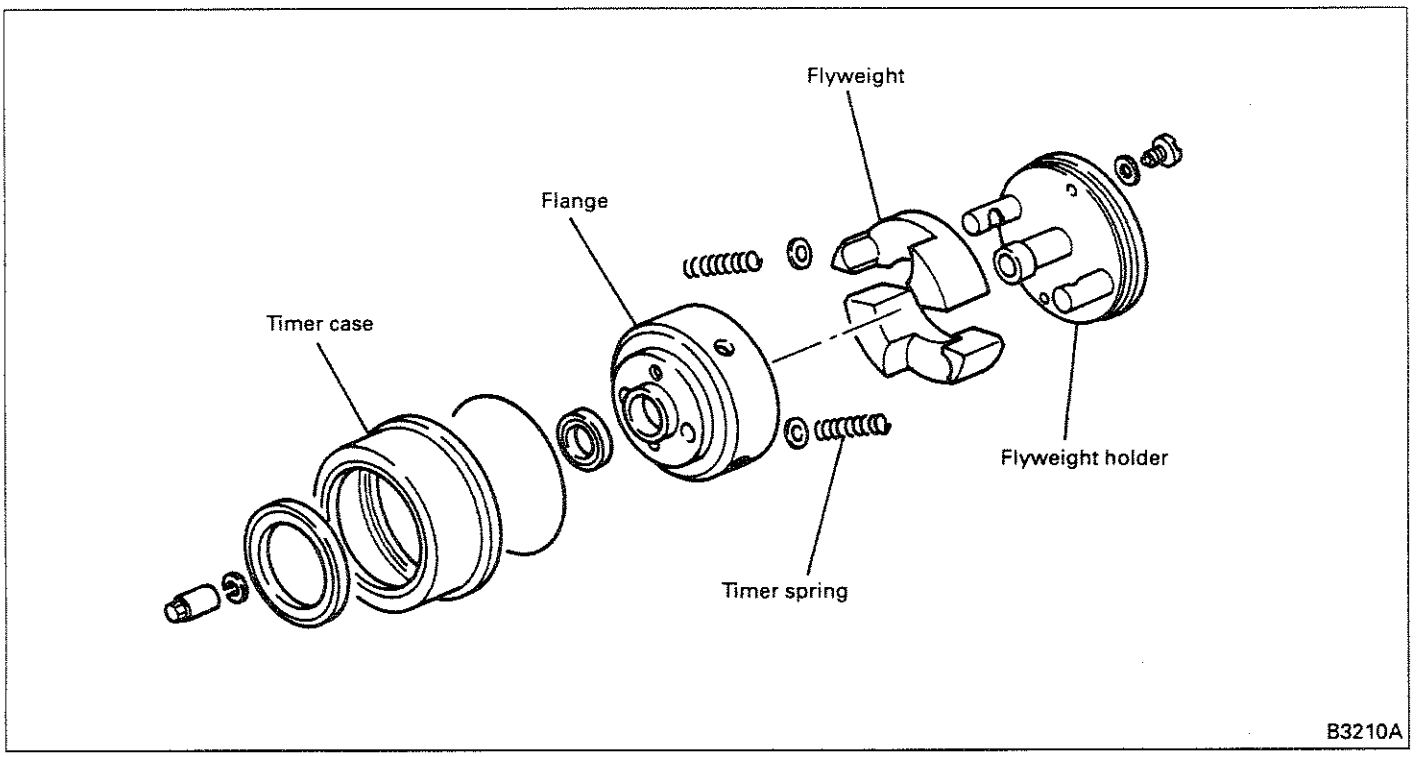

Each of the two flyweights has a hole in one side. The flyweight holder pins fit into these holes. The flange legs touch the flyweights' curved surfaces. Timer springs are fitted to the flyweight pins and flange legs.

Engine rotation is transmitted by the flange to the flange legs, flyweights, flyweight holder, and injection pump camshaft.

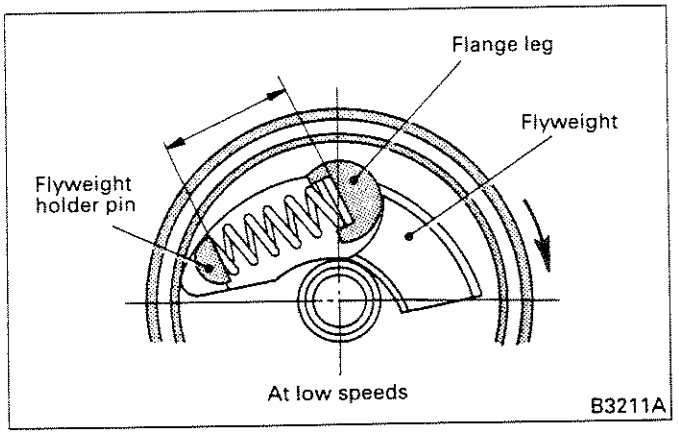

At low engine speeds, no centrifugal force acts on the flyweights, so the timer springs have their maximum installed length.

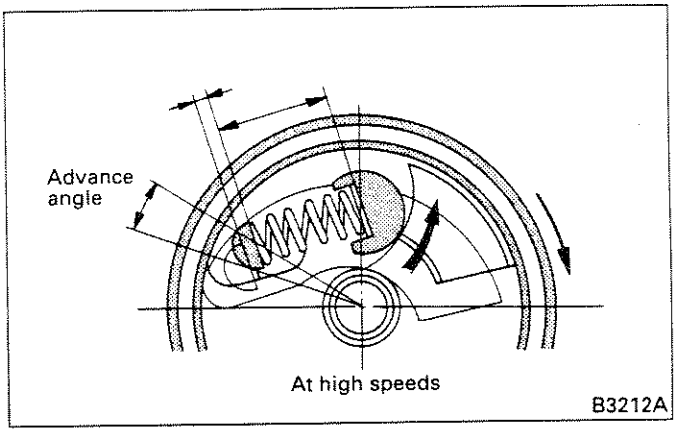

At high engine speeds, centrifugal force acts on the flyweights. The flyweights thus open outward, pivoting on the flyweight holder pins. When this happens, the flange legs are pushed by the curved surfaces of the flyweights in the timer springs' compression direction but cannot move since they are coupled to the drive side.
While compressing the timer springs, the flyweight holder pins are thus drawn in the direction of rotation, which moves the pump camshaft in the direction of rotation and advances the injection timing.
If the engine slows from a high speed to a low speed, the flyweights' centrifugal force diminishes. The flyweights thus return to their original positions and the flyweight holder pins are pushed back by the timer springs.

(b) SP type automatic timer <6D22-T, TC, 24-T, 24-TC, 8DC8, 9, 9-T, 9-TC>

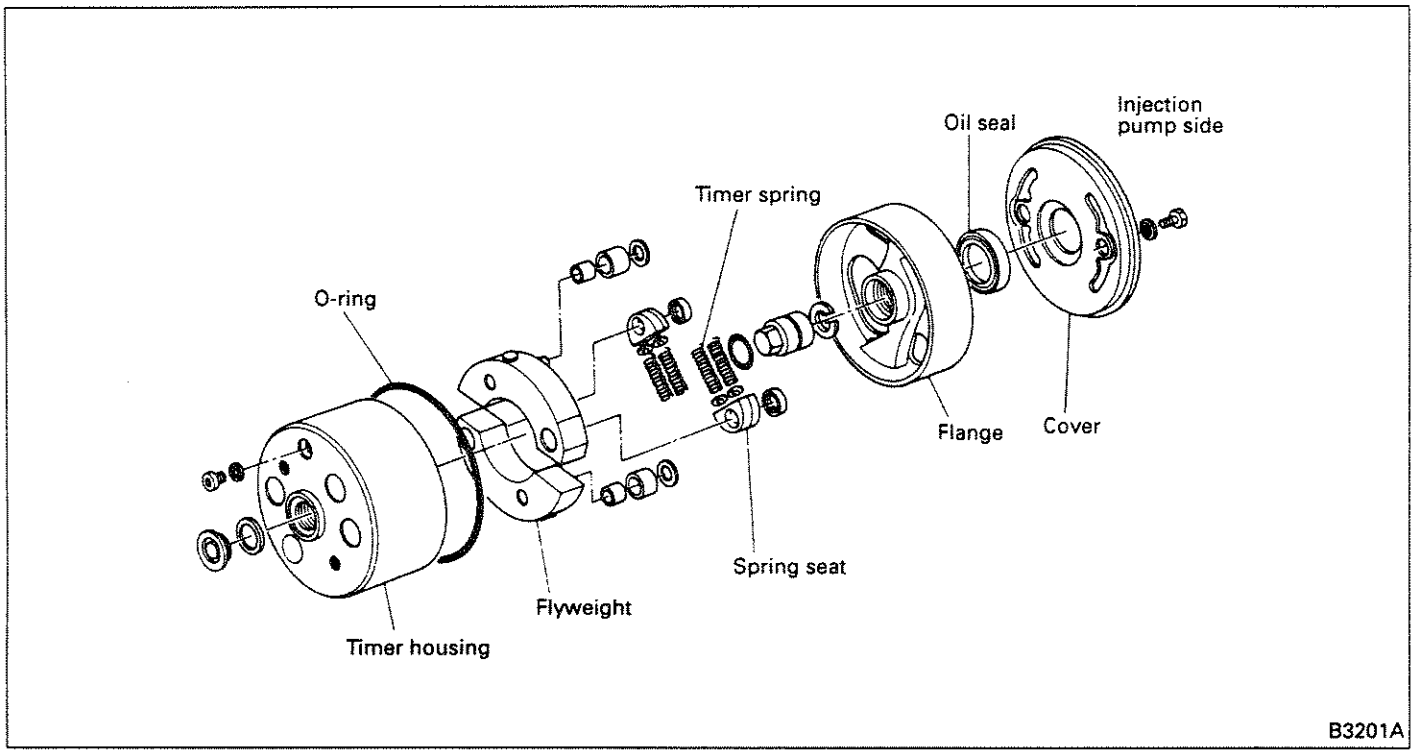

Two flyweights are fitted on the pins of the timer housing and are held in the timer housing. On the other hand, the injection pump connection side flange has a curved surface, and the roller fitted on the pin installed in the flyweight touches the curved surface. Timer springs are held between the spring seats fitted on the timer housing pins which extend through the flange and flyweight. These parts are housed in the timer housing and are totally enclosed with a cover, O-ring and oil seal.

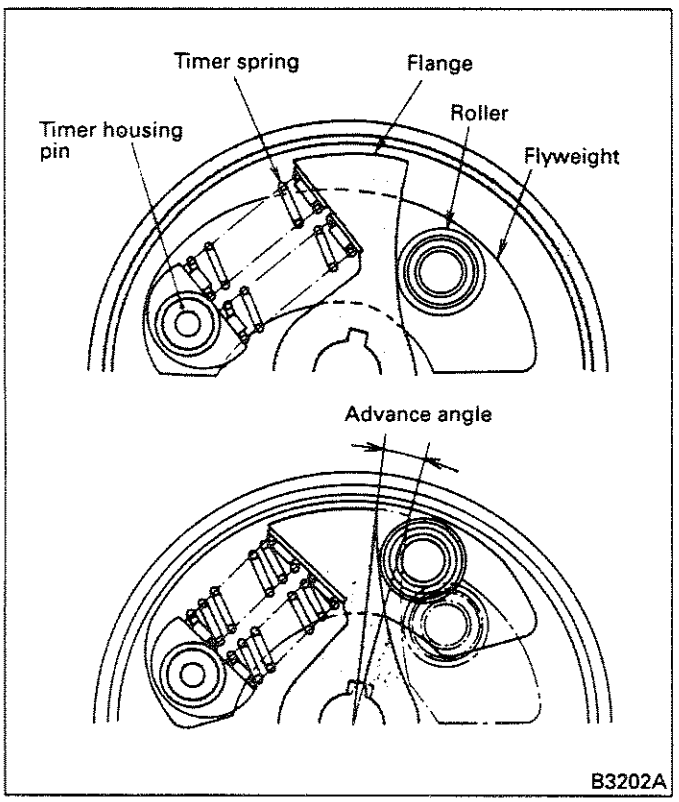

When the engine is running at a low speed, the timer spring pressure is stronger than the centrifugal force of flyweight, so the roller of flyweight is held down by the flange, creating no advance state.

When the engine reaches a high speed, the centrifugal force of flyweight becomes stronger, the roller of flyweight pushes the curved surface of flange with the timer housing pin as the fulcrum, and the flyweight opens outward, while compressing the timer springs. In this manner, the roller installed on the flyweight moves the flange in the turning direction and advances the injection timing.

(c) SPG type automatic timer <8DC9-TL>

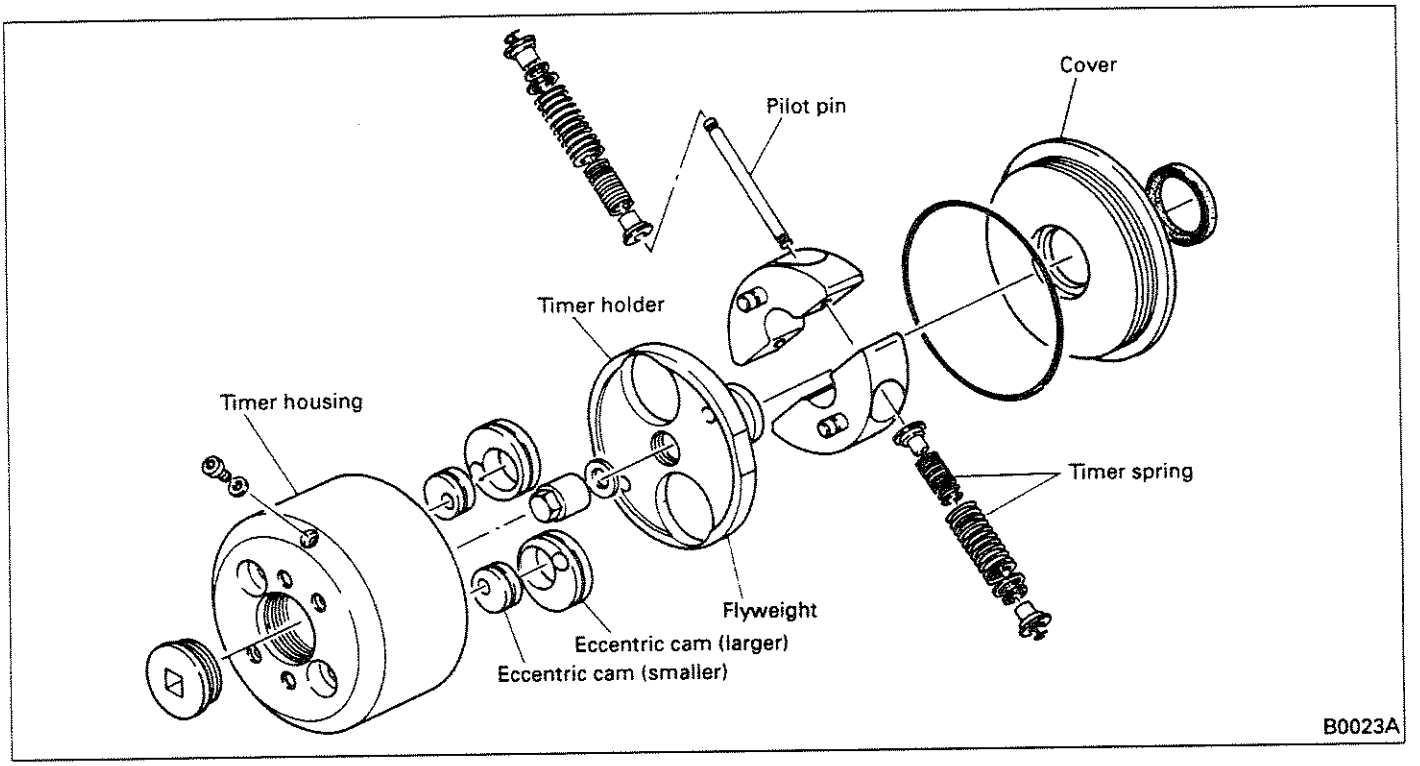

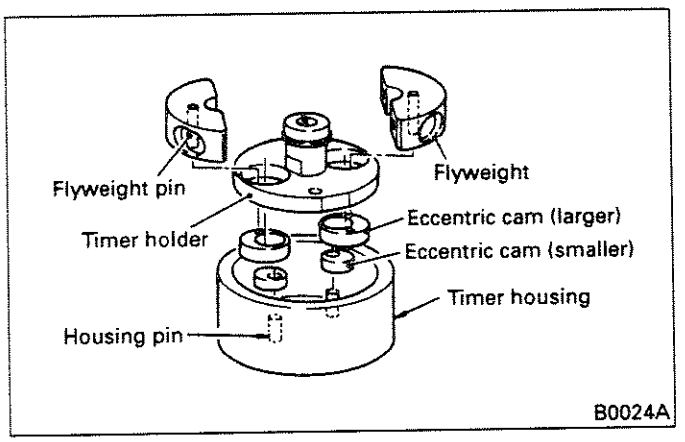

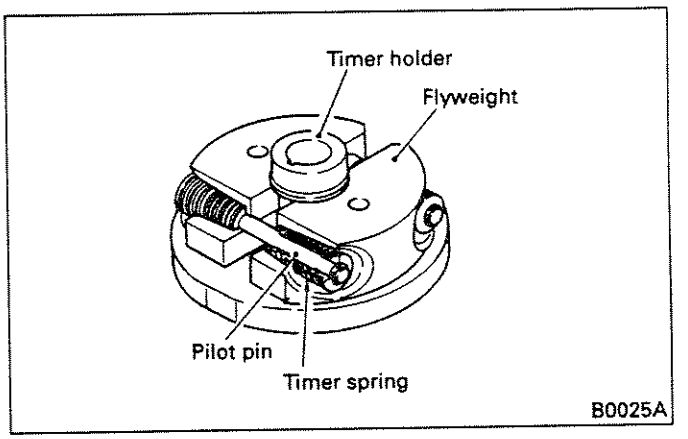

The timer housing receives rotating motion of the engine through a coupling. The timer holder is directly connected to the injection pump camshaft. Two opposing pins are press-fitted in the timer housing. A small eccentric cam is mounted on each of the pins and a large eccentric cam is slid over the periphery of the small cam. The two holes in the timer holder fit over the large eccentric cams.
Pins are pressed into the undersides of the flyweights. These flyweight pins fit into holes in the larger eccentric cams.
When the timer housing is rotated, the timer holder is rotated at the same time driving the injection pump.

The two flyweights have the timer holder in between and are provided with timer springs having the same set tension to keep the flyweights evenly in position. When the engine is not running or running at low speeds, the flyweights are pressed against the timer holder by the set tension of the springs.

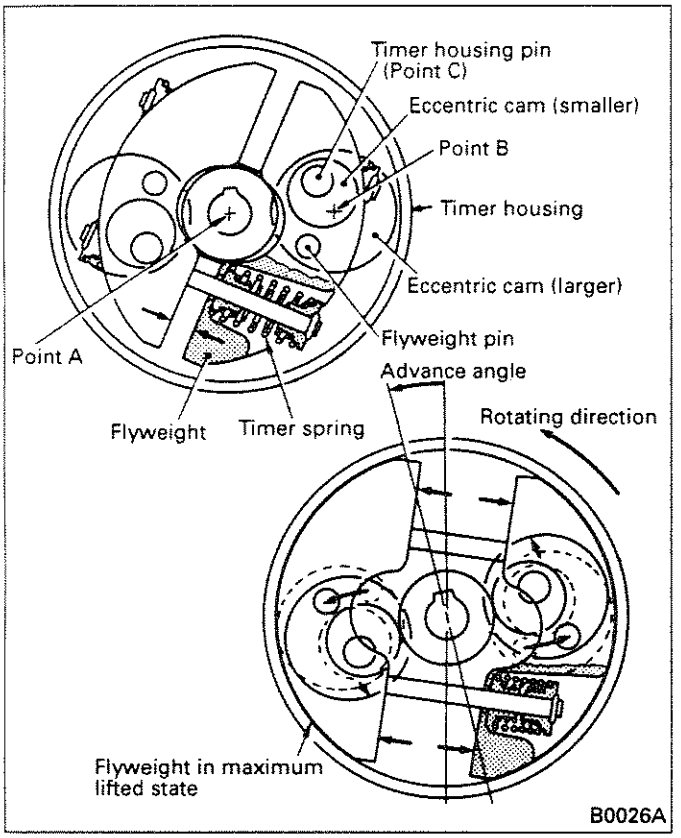

When the engine is not running, the flyweights are pressed against the timer holder by the timer spring set tension.

When the engine is started, a centrifugal force is produced by the flyweights; however, it is less than the timer spring set tension keeping the flyweights remaining the original positions, without lifting.

As the engine speed increases, the centrifugal force of the flyweights also increases and will be balanced with the spring tension. When the engine speed further increases, the centrifugal force overcomes the timer spring set tension, causing the flyweights to lift outward. This causes the center (point B) of the large eccentric cam pivot about the center (point A) of the timer, moved in the rotating direction, by the small eccentric cam pivoting about the timer housing pin (point C). Since the large eccentric cam is fitted to the timer holder, that motion of the large eccentric cam is imparted to the timer holder. The maximum advance is obtained when the backs of the flyweights are against the inner wall of the timer housing.

(5) Boost compensator

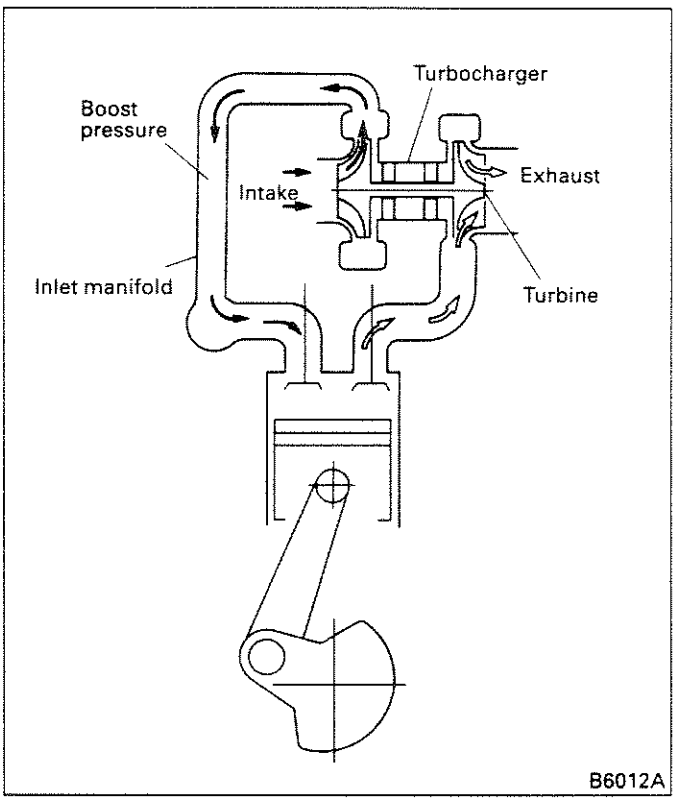

The boost compensators increase the engine's power output by increasing the rate of fuel injection to match increases in air intake caused by the turbocharger. To increase the amount of fuel injected, the boost compensators utilize the boost pressure in the inlet manifold.

There are two boost compensators. One is fitted to the governor, and the other is fitted to the drive side of the injection pump.

(a) Governor-side boost compensator

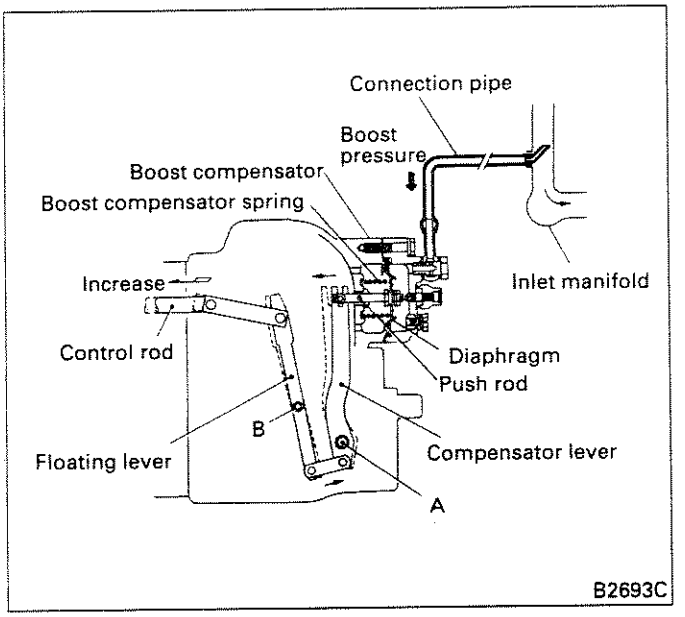

As the boost pressure overcomes the compensator spring, the diaphragm and push rod are pushed to the left. Movement of the diaphragm is pivoted on point "A" of the compensator lever and moves the compensator lever in the direction shown by the dotted lines. As the diaphragm and compensator lever move, the floating lever pivots counter-clockwise about point "B," thereby pushing the control rod in the fuel-increase direction. The system is thus able to increase the fuel quantity irrespective of the governor.

(b) Drive-side boost compensator

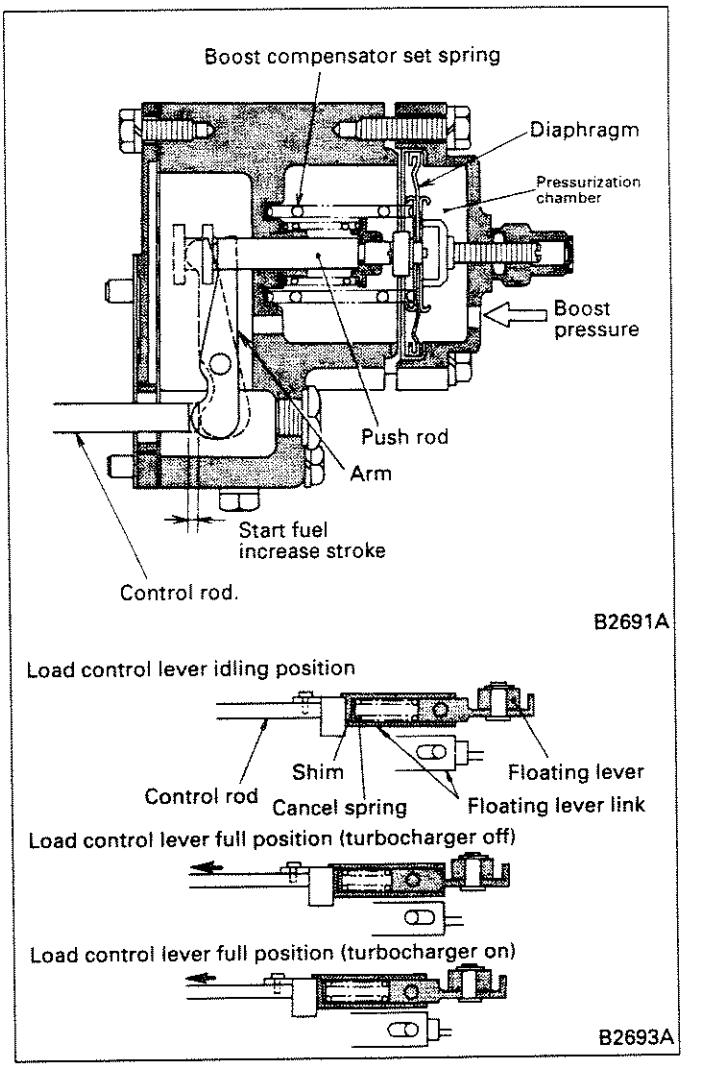

When the boost pressure rises above the boost compensator spring set pressure by the action of the turbocharger, the diaphragm forces out the push rod. The cancel spring installed between the control rod and floating lever on the governor side is set so that it pushes, at all times, the control rod in the direction of greater fuel supply. This means that, when the push rod moves in the direction shown by the arrow, the control rod moves in the direction of greater fuel supply.

This boost compensator also has a spring that increases fuel supply at engine start.

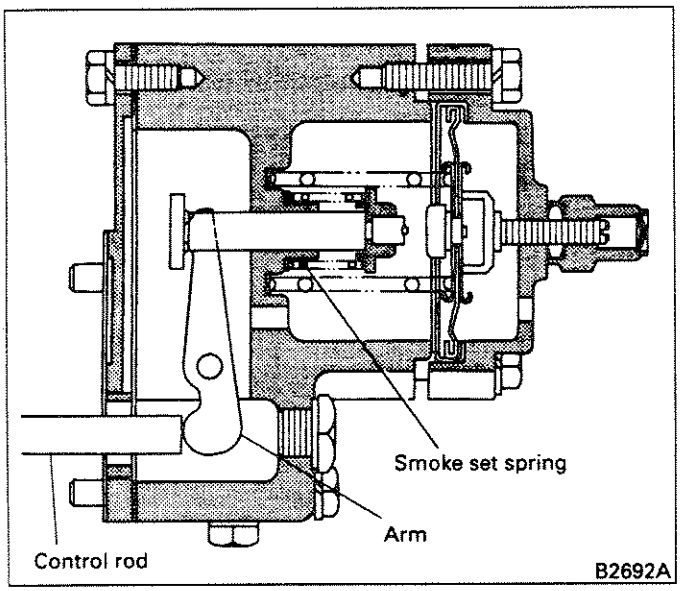

Before the engine is started, the idling spring in the governor, forcing the control rod in the direction of more fuel supply overcomes the force of the smoke set spring and therefore the control rod moves to the start fuel increase position while forcing the arm. When the engine is started, the idling spring is compressed by the shifter and as a result, it loses the force to push out the control rod. Then, the smoke set spring forces the control rod back to the normal position.

(6) Pump drive case

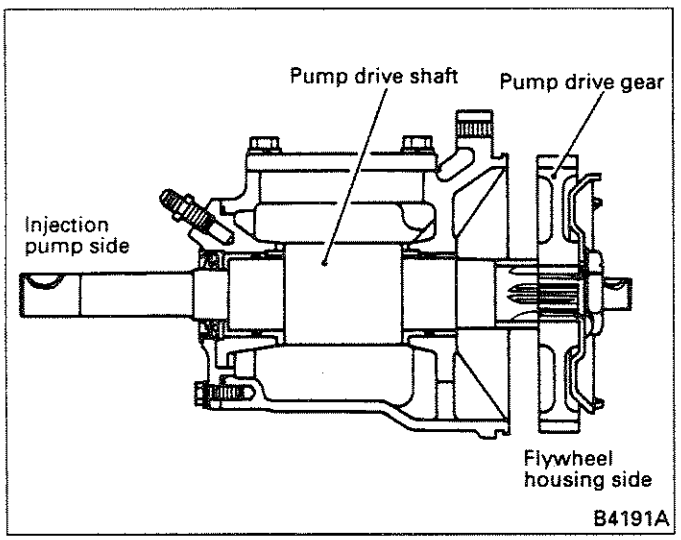

The pump drive case, installed at the left of the flywheel housing, is driven by the timing gear of the engine at half the engine speed. The pump drive shaft, with its end connected to the coupling of the injection pump, drives the injection pump.

(7) Injection nozzle

(a) Hole type (1-spring nozzle)

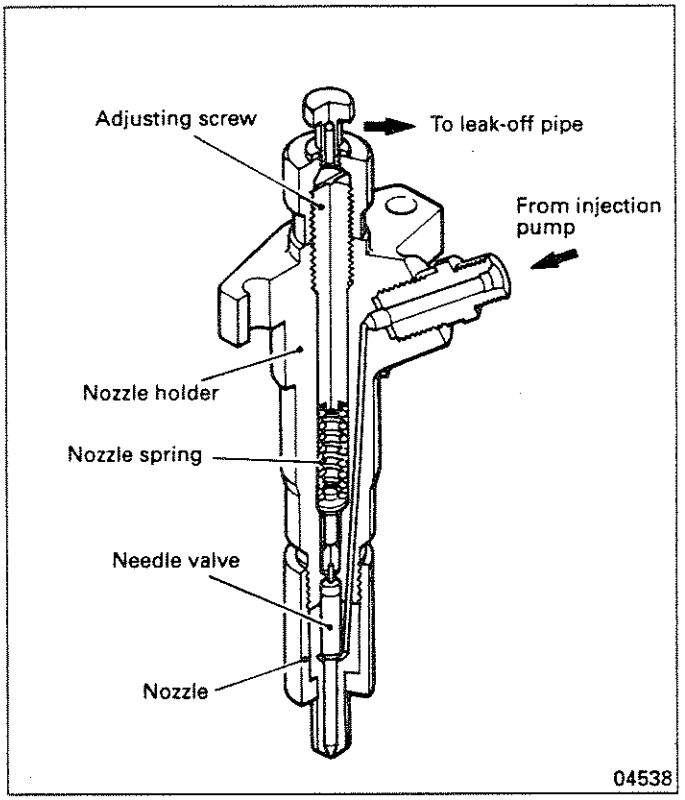

The fuel delivered from the injection pump enters the nozzle holder and has a pressure higher than the specified pressure. So the fuel overcomes the nozzle spring and pushes the needle valve up.

The high pressure fuel which has forced the needle valve up is injected from the orifice at the end of the nozzle into the engine combustion chamber.

Some of the high pressure fuel lubricates the needle valve, etc. and is returned through the fuel leak-off pipe to the fuel tank.

The injection pressure of the injection nozzle is adjusted by changing the tension of the nozzle spring with the adjusting screw.

(b) Hole type (2-spring nozzle)

Two models of hole type injection pumps are used. Their constructions are as follows.

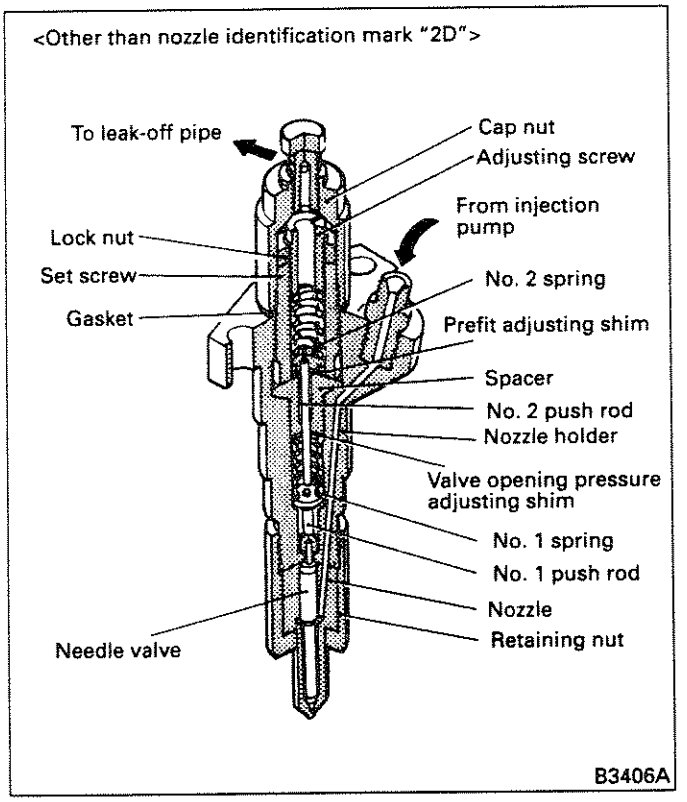

The nozzle has two springs and push rods, and a clearance (prelift) is provided between two rods.

When the high pressure fuel fed from the injection pump overcomes the 1st spring which determines the valve opening pressure, the needle valve opens to start the pre-injection and simultaneously moves the 1st push rod upward.

When the 1st push rod moves through the prelift and contacts the 2nd push rod, the needle valve stops moving momentarily. As the fuel pressure further increases and overcomes the resultant force of the 1st and 2nd springs, the needle valve restarts moving upward for the main injection.

Some of the high-pressure fuel is used to lubricate the needle valve and other components and is returned to the fuel tank via the leak-off pipe.

Fuel injection pressure adjustments are made using the shim.

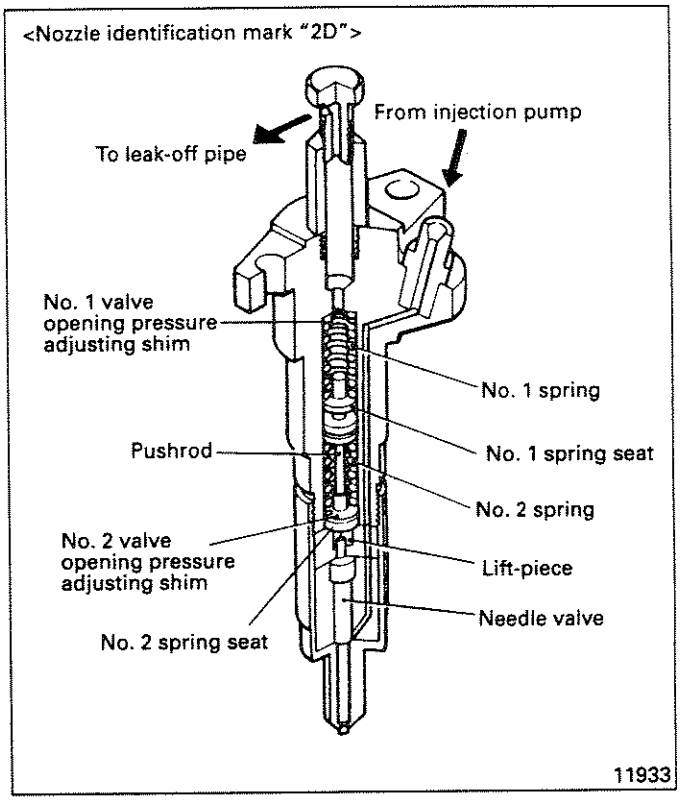

With this nozzle, a prelift clearance is provided between the lift-piece and No. 2 spring seat, and the nozzle's injection starting pressure is determined by the force of the No. 1 spring.

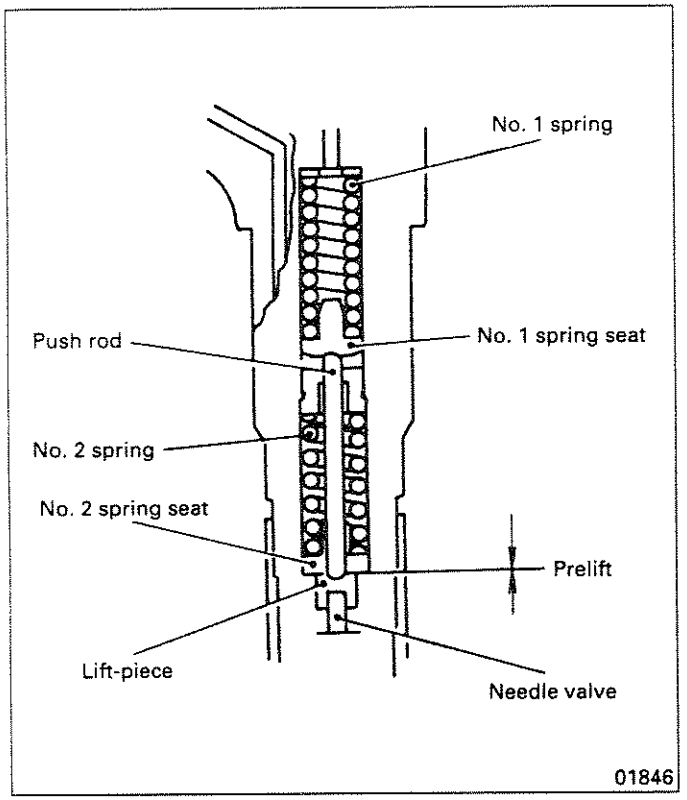

As the pressure of the fuel fed from the injection pump (i.e., the pressure in the nozzle tube) overcomes the No. 1 spring, the needle valve rises by the prelift distance. When the lift-piece rises by the prelift distance, it meets the No. 2 spring seat. Since the lift-piece and No. 1 spring seat are pressing together, the spring force at this time is that of the No. 1 and No. 2 springs combined, and the needle valve momentarily stops rising. As the fuel pressure rises and the pressure in the nozzle tube overcomes the two springs, the needle valve rises further and the nozzle injects the remaining larger quantity of fuel.
Fuel injection pressure adjustments are made using the shim.

(8) Fuel filter

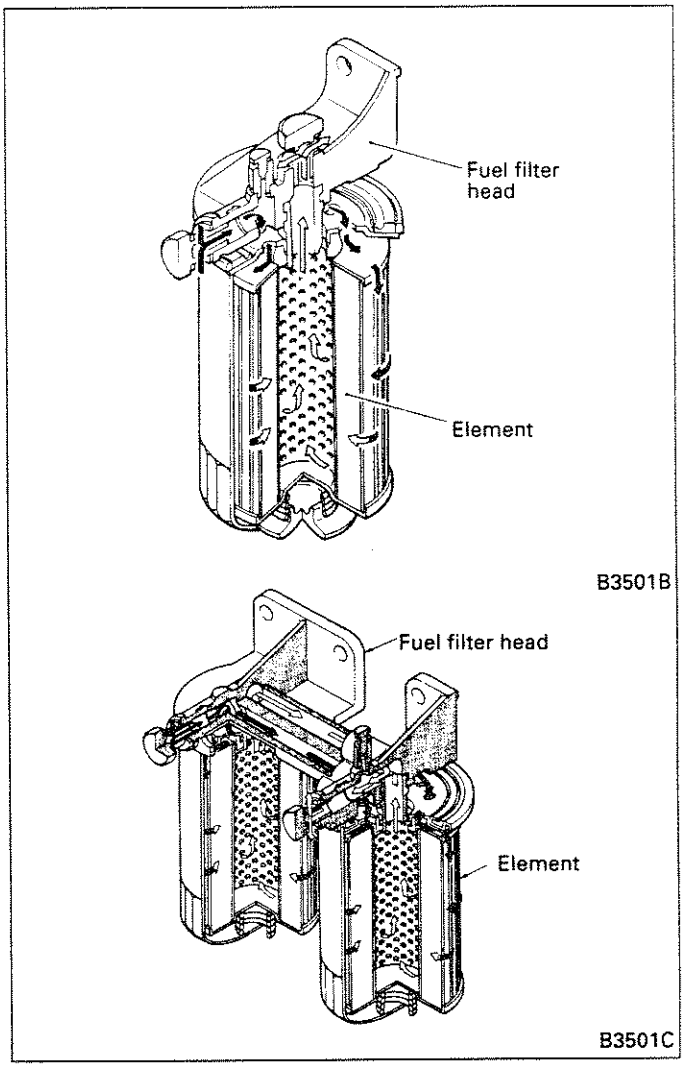

The fuel filter may be either the element replace type or the spin-on type which facilitates replacement of element.
It separates water content in the fuel fed under pressure from the fuel feed pump of injection pump and eliminates dirt in the fuel by the element.

(9) Water separator

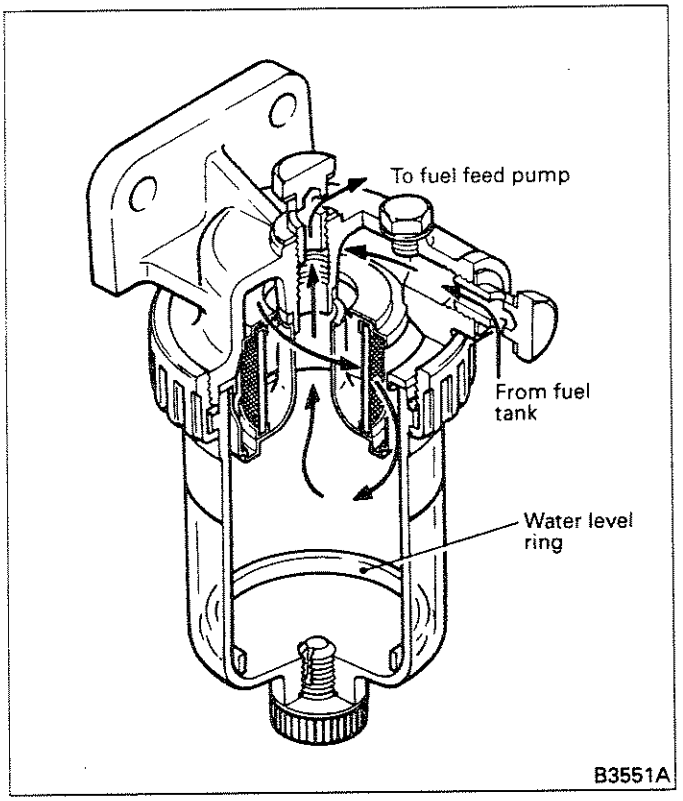

The sedimenter type water separator separates gas oil and water centrifugally by taking advantage of their difference in specific gravity.
The fuel that has flowed in from the inlet connector is squeezed by the fuel path of the head to increase the flow velocity and spins. The separated water is sedimented in the case, whereas the water-separated fuel is drawn through the fuel path in the center of the head into the feed pump.
The water separator sediments not only water but also mud components.
A red float goes up and down with the water level in the semi-transparent case, making it possible to visually check the water quantity.

2. SPECIFICATIONS

(1) Injection pump and injection nozzles <6D2>

Item	Specification				
	Manufacturer ZEXEL Corp.				
	Applicable engine model <6D22>		<6D22-T>		
Injection pump proper	(Standard)	(Optional)	(Standard)	(Optional)	(Optional)
Type	Bosch in-line type	Bosch in-line type	Bosch in-line type	Bosch in-line type	Bosch in-line type
Model	AD	AD	P	P	P
Turning direction (viewed from drive side)	Clockwise	Clockwise	Clockwise	Clockwise	Clockwise
Plunger diameter mm	10.5	10.5	12	12	12
Governor					
Model, Type	RSV-type all-speed mechanical governor	RFD-type minimum/ maximum mechanical governor	RSV-type all-speed mechanical governor	RFD-type minimum/ maximum mechanical governor	RSV-type all-speed mechanical governor
Fuel feed pump					
Model	KE	KE	K	K	KD
Automatic timer					
Model, Type	SA-type mechanical automatic timer	SA-type mechanical automatic timer	SP-type mechanical automatic timer	SP-type mechanical automatic timer	SP-type mechanical automatic timer
Injection nozzles			(Standard)	(Optional)	
Type	Hole type (1-spring)		Hole type (1-spring)	Hole type (2-spring)	Hole type (1-spring)	Hole type (1-spring)
Model	DLLA		DLLA	DLLA	DLLA	DLLA
No. of holes	4		4	4	4	5
Hole diameter mm	0.37		0.37	0.37	0.37	0.38
Spray angle	154°		154°	154°	154°	157°

Item	Specification				
	Manufacturer ZEXEL Corp.				
	<6D22-TC>		<6D24-T>		<6D24-TC>
Injection pump proper			(Standard)	(Optional)	
Type	Bosch in-line type		Bosch in-line type	Bosch in-line type	Bosch in-line type
Model	P		P	P	P
Turning direction (viewed from drive side)	Clockwise		Clockwise	Clockwise	Clockwise
Plunger diameter mm	12		12	12	12
Governor					
Model, Type	RSV-type all-speed mechanical governor		RSV-type all-speed mechanical governor	RFD-type minimum/ maximum mechanical governor	RSV-type all-speed mechanical governor
Fuel feed pump					
Model	K		K	K	K
Automatic timer					
Model, Type	SP-type mechanical automatic timer		SP-type mechanical automatic timer	SP-type mechanical automatic timer	SP-type mechanical automatic timer
Injection nozzles	(Standard)	(Optional)			
Type	Hole type (1-spring)	Hole type (2-spring)	Hole type (2-spring)		Hole type (2-spring)
Model	DLLA	DLLA	DLLA		DLLA
No. of holes	5	5	5		5
Hole diameter mm	0.36	0.36	0.36		0.36
Spray angle	150°	150°	157°		150°

(2) Injection pump and injection nozzles <8DC>

Item	Specification							
	Manufacturer ZEXEL Corp.							
	<8DC9>				<8DC9-T>		<8DC9-TL>	<8DC9-TC>
Injection pump proper	(Standard)	(Optional)	(Optional)		(Standard)	(Optional)		
Type	Bosch in-line type	Bosch in-line type	Bosch in-line type		Bosch in-line type	Bosch in-line type	Bosch in-line type	Bosch in-line type
Model	AD	AD	P		P	P	P	P
Turning direction (viewed from drive side)	Clockwise	Clockwise	Clockwise		Clockwise	Clockwise	Clockwise	Clockwise
Plunger diameter mm	10.5	10.5	12.0		11.0	11.0	12.0	12.0
Governor								
Model, Type	RSV-type all-speed mechanical governor	RFD-type minimum/ maximum mechanical governor	RFD-type minimum/ maximum mechanical governor		RSV-type all-speed mechanical governor	RFD-type minimum/ maximum mechanical governor	RFD-type minimum/ maximum mechanical governor	RSV-type all-speed mechanical governor
Fuel feed pump								
Model	KE	KE	K		KD	KD	KD	KD
Automatic timer								
Model, Type	SP-type mechanical automatic timer	SP-type mechanical automatic timer	SP-type mechanical automatic timer		SP-type mechanical automatic timer	SP-type mechanical automatic timer	SPG-type mechanical automatic timer	SP-type mechanical automatic timer
Injection nozzles			(Standard)	(Optional)				
Type	Hole type (1-spring)	Hole type (1-spring)	Hole type (2-spring)	Hole type (1-spring)	Hole type (1-spring)	Hole type (2-spring)	Hole type (2-spring)	Hole type (1-spring)
Model	DLLA	DLLA	DLLA	DLLA	DLLA	DLLA	DLLA	DLLA
No. of holes	5	5	5	5	5	5	5	5
Hole diameter mm	0.32	0.32	0.32	0.32	0.36	0.34	0.36	0.36
Spray angle	158°	158°	160°	157°	155°	157°	157°	155°

(2) Others

Item	Specification
Fuel filter	
Type	Spin-on type
Water separator	
Type	Sediment trap type

3. SERVICE STANDARDS

3.1 Service Standards Table

(1) Injection pump

Unit: mm

Maintenance item					Nominal value (Basic diameter in [ ])	Limit	Remedy and remarks
Fuel injection start timing (BTDC)					Dependent on specification	–	Adjust
Eccentricity with respect to air compressor crankshaft (or pump drive shaft)					0.2 or less	–	Adjust shims
Injection pump proper	Overflow valve opening pressure		8DC9		155 kPa {1.6 kgf/cm^2}	–	Replace
			6D22: For construction machinery, 6D22-T, 22-TC, 8DC9-T, 9-TL, 9-TC		255 kPa {2.6 kgf/cm^2}	–	
	Sliding resistance of control rack (when stationary)		AD type	6D2	1.5 N {150 gf} or less	–	Check
				8DC	2.0 N {200 gf} or less	–	
			P type	6D2	1.3 N {130 gf} or less	–	
				8DC	1.5 N {150 gf} or less	–	
	End play of camshaft				0.02 to 0.06	0.1	Adjust shims
	Overall tappet (roller) clearance				–	0.2	Replace
	Backlash between control rack and pinion			AD type	0.15	0.3	Replace
	Full stroke of control rack (or control rod)				21 or more	–	Check
	Prestroke			AD type	4.5 ± 0.05	–	Adjust
				P type	4.8 ± 0.05	–	
	Injection start interval			6D2	60° ± 30′	–	Adjust
				8DC	45° ± 30′	–	
	Tappet clearance			AD type	0.3 or more	–	Adjust
Dimension from governor housing to shifter			RSV type		19 to 19.2	–	Adjust shims
			RFD type		33 to 33.4	–	
Feed pump	Tightness [when 195 kPa {2 kgf/cm^2} of air pressure is applied]				0 cm^3/min.	–	Replace
	Priming pump lift capacity (No. of strokes required before lifting when operated at 60 to 100 strokes/min.)				25 strokes or less	–	Replace
	Delivery (min.) for 15 seconds	100 rpm	KE type		60 cc	–	Replace
			K type	6D2	60 cc	–	
				8DC	70 cc	–	
			KD type	6D2	130 cc	–	
				8DC	145 cc	–	
		500 rpm	KE type		340 cc	–	
			K type	6D2	260 cc	–	
				8DC	300 cc	–	
			KD type	6D2	700 cc	–	
				8DC	710 cc	–	

Unit: mm

Maintenance item					Nominal value (Basic diameter in [ ])	Limit	Remedy and remarks
Feed pump	Delivery (min.) for 15 seconds	1000 rpm	KE type		405 cc	–	Replace
			K type	6D2	530 cc	–	
				8DC	600 cc	–	
			KD type	6D2	1170 cc	–	
				8DC	1170 cc	–	
		1500 rpm	KE type		430 cc	–	
			K type	6D2	520 cc	–	
				8DC	580 cc	–	
			KD type	6D2	1000 cc	–	
				8DC	1035 cc	–	

(2) Injection nozzle

Unit: mm

Maintenance item				Nominal value (Basic diameter in [ ])	Limit	Remedy and remarks
Valve opening pressure			1-spring nozzle	21.6 MPa {220 kgf/cm^2}	–	Adjust
			2-spring nozzle	17.7 MPa {180 kgf/cm^2}	–	
2-spring nozzle	Prelift	Except nozzle identification mark "2D"		0.10 ± 0.02	–	Adjust
		Nozzle identification mark "2D"		0.07 ± 0.02	–	
	2-spring regulated pressure (open pressure) <Except nozzle identification mark "2D">		Standard	24.8 to 25.4 MPa {253 to 259 kgf/cm^2}	–	Adjust
			Option	26.2 to 26.9 MPa {267 to 274 kgf/cm^2}	–	
	2-spring regulated pressure (cover pressure) with a 0.05 needle valve lift		Except nozzle identification mark "2D"	23.0 to 23.5 MPa {235 to 240 kgf/cm^2}	–	Adjust
			Nozzle identification mark "2D"	25.5 to 26.5 MPa {260 to 270 kgf/cm^2}	–	

3.2 Tightening Torque Table

Location tightened				Screw size O.D. x pitch (mm)	Tightening torque N·m {kgf·m}	Remarks
Injection pump bracket mounting bolt			6D2	M10 x 1.5	35 to 53 {3.6 to 5.4}	
			8DC		42 to 59 {4.3 to 6.0}	
Injection pipe union nut	On pump side		AD type	M12 x 1.5	29 {3}	
			P type	M14 x 1.5	29 {3}	
	On nozzle side			M12 x 1.5	29 {3}	
Injection pump	Overflow valve			–	20 to 29 {2 to 3}	
	Injection pump fuel inlet side eyebolt		AD type (6D2 only), P type	–	20 to 29 {2 to 3}	
			AD type (8DC only)	–	25 to 29 {2.5 to 3}	
	Lubricant (inlet) side eyebolt		AD type	–	9.8 to 13 {1 to 1.3}	
			P type	–	12 to 15 {1.2 to 1.5}	
	Lubricant (outlet) side eyebolt		AD type	–	15 to 18 {1.5 to 1.8}	
			P type	–	20 to 29 {2 to 3}	
	Boost compensator eyebolt			–	12 to 15 {1.2 to 1.5}	
	Delivery valve holder		AD type	–	64 to 69 {6.5 to 7}	
			P type	–	105 to 115 {11 to 12}	Tighten three times to the specified torque
	Lock plate		AD type	–	4.4 to 5.9 {0.45 to 0.6}	
	Flange sleeve nut		P type	–	39 to 44 {4 to 4.5}	
	Governor flyweight mounting round nut			–	49 to 59 {5 to 6}	
	Fuel feed pump	Fuel inlet side eyebolt		–	20 to 25 {2 to 2.5}	
		Fuel outlet side eyebolt	KE, K, KD type (6D2 only)	–	20 to 25 {2 to 2.5}	
			K, KD type (8DC only)	–	20 to 29 {2 to 3}	
	Automatic timer round nut		SA type	–	83 to 98 {8.5 to 10}	
			SP type	–	125 to 145 {13 to 15}	
			SPG type	–	145 to 165 {15 to 17}	
	Cap screw		SP type	–	29 to 39 {3 to 4}	
			SPG type	–	64 to 83 {6.5 to 8.5}	
	Cover mounting bolt		SP type	–	22 to 24 {2.2 to 2.4}	
	Cover		SPG type	–	295 to 345 {30 to 35}	
	Oil filler port bolt		SPG type	–	9.8 to 15 {1.0 to 1.5}	
<6D2: AD type> 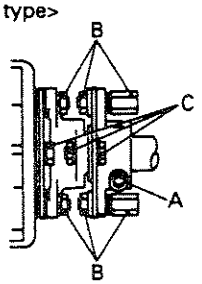 B3408A			A bolt	–	49 to 54 {5 to 5.5}	
			B bolt	–	29 to 34 {3 to 3.5}	
			C bolt	–	29 to 34 {3 to 3.5}	

Location tightened			Screw size O.D. x pitch (mm)	Tightening torque N·m {kgf·m}	Remarks
<6D2: P type, 8DC> 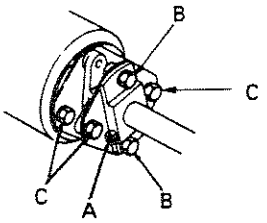		A bolt	–	74 to 83 {7.5 to 8.5}	
		B bolt	–	59 to 64 {6 to 6.5}	
		C bolt	–	59 to 64 {6 to 6.5}	
Injection pump gear mounting nut of pump drive case			M24 x 1.5	215 {22}	
Injection nozzle	Leak-off pipe eyebolt		M8 x 1	9.8 to 15 {1 to 1.5}	
	Injection nozzle bolt (for attaching to cylinder head)		M8 x 1.25	15 {1.5}	
	1-spring nozzle	Retaining nut	M19 x 1	59 to 78 {6 to 8}	
		Cap nut	M14 x 1	39 to 49 {4 to 5}	
		Inlet connector	M14 x 1.5	69 to 78 {7 to 8}	
	2-spring nozzle	Retaining nut	M19 x 1	59 to 78 {6 to 8}	Except nozzle identification mark "2D"
		Cap nut	M22 x 1.5	39 to 49 {4 to 5}	
		Inlet connector	M14 x 1.5	69 to 78 {7 to 8}	
		Set screw	M22 x 1.5	49 to 59 {5 to 6}	
		Lock nut	M14 x 1	20 to 25 {2 to 2.5}	
	2-spring nozzle	Leak-off connector	M14 x 1	29 to 39 {3 to 4}	Nozzle identification mark "2D"
		Retaining nut	M19 x 0.75	59 to 78 {6 to 8}	
Fuel filter connector bolt			M14 x 1.5	25 {2.5}	
Water separator	Eye bolt		M14 x 1.5	25 {2.5}	
	Air plug		M8 x 1.25	7.8 to 12 {0.8 to 1.2}	

4. SPECIAL TOOL

Unit: mm

Tool name	Shape
Filter Wrench MH061572 Removal of fuel filter element	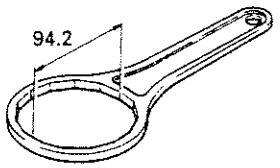 B5222A
Injection Pump Centering Tool MH061340 <P type> Centering of bracket of injection pump	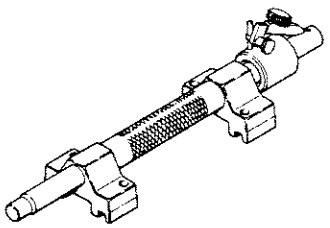 B5031A

Unit: mm

Tool name	Shape
Injection Pump Centering Tool MH061270 <AD type> Centering of bracket of injection pump	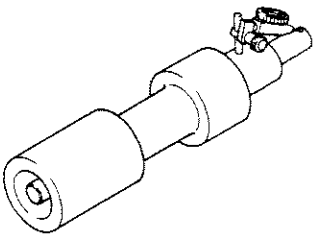 12221

5. SERVICE PROCEDURE

5.1 Injection Pump Assembly

5.1.1 Removal and installation

(1) Removal procedure

(a) Ready a fluid receiver and waste cloth to ensure that the engine is not contaminated by fuel or engine oil.

(b) Remove all pipes and harness connectors that make the removal job difficult or impossible.

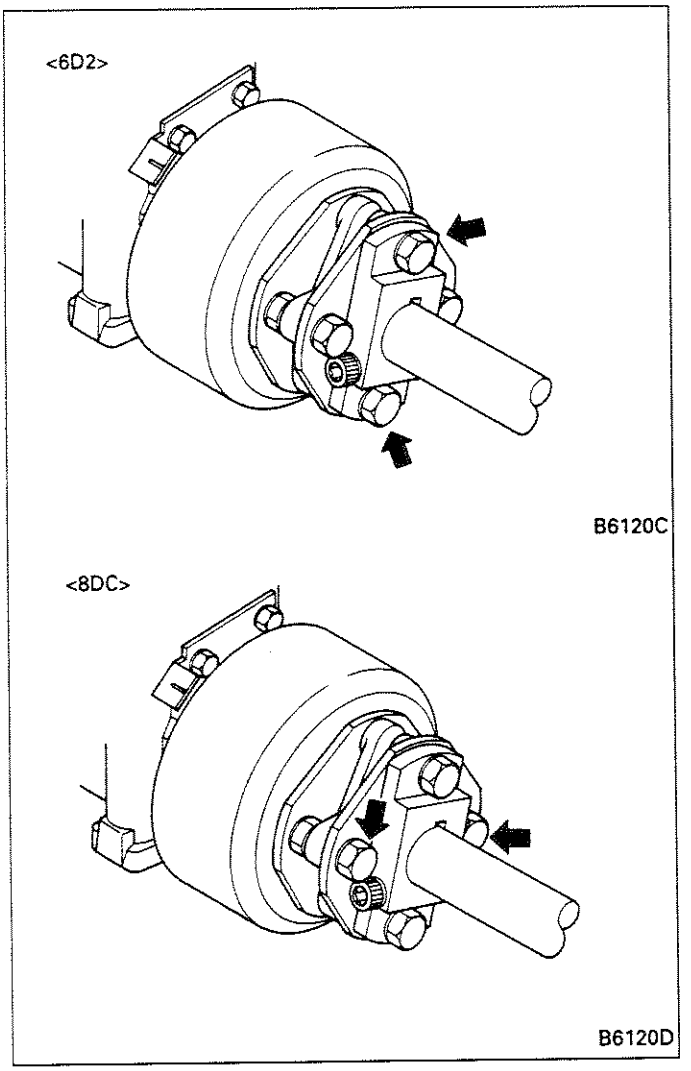

(c) Remove the bolt shown from the coupling.

(d) Remove the injection pump from the injection pump bracket.

NOTE:

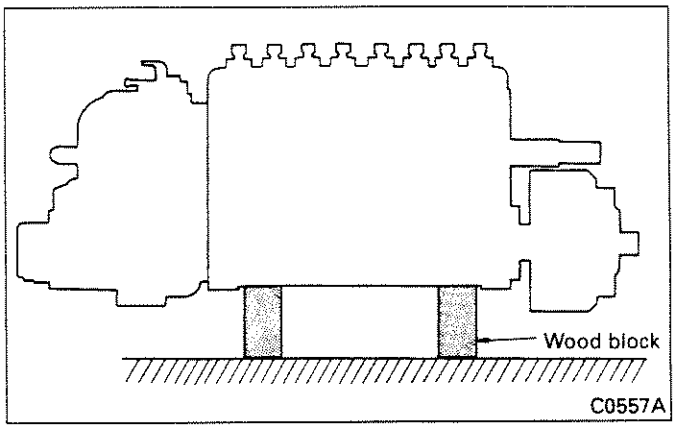

Keep the injection pump removed on wooden blocks so as to protect the automatic timer area from impact.

(e) Do not remove the injection pump bracket unless defects, such as cracks, are evident.

(2) Installation procedure

NOTE:

The following procedures assume that the injection pump is equipped with an air compressor. The same procedures apply to one with a pump drive case.

(a) Adjustment of injection pump bracket

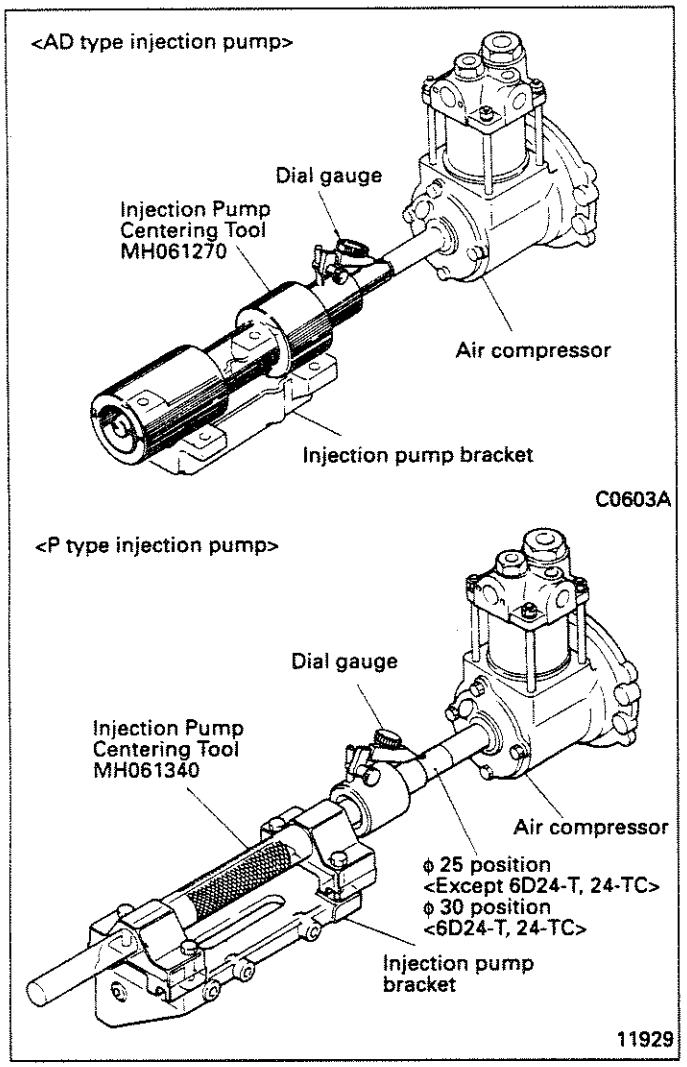

1) Make zero-point adjustment with Injection Pump Centering Tool (special tool) placed on the injection pump bracket and a dial gauge set on the mandrel of the special tool.

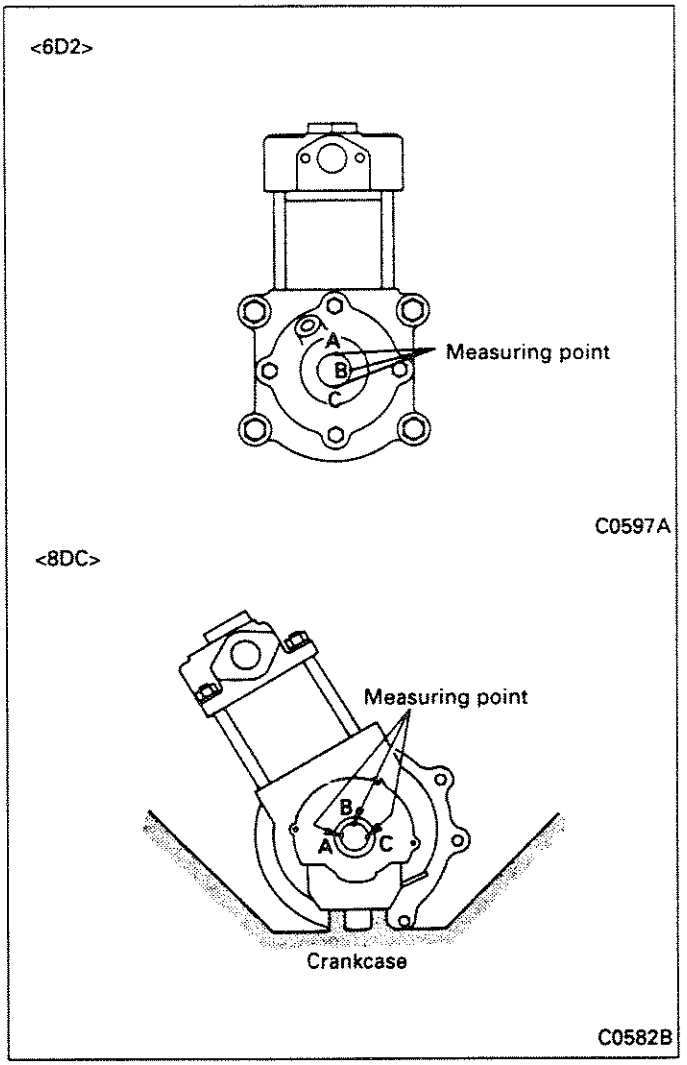

2) Slide the dial gauge toward the air compressor and measure the misalignment between the mandrel of the special tool and the air compressor crankshaft at points shown in the figure.

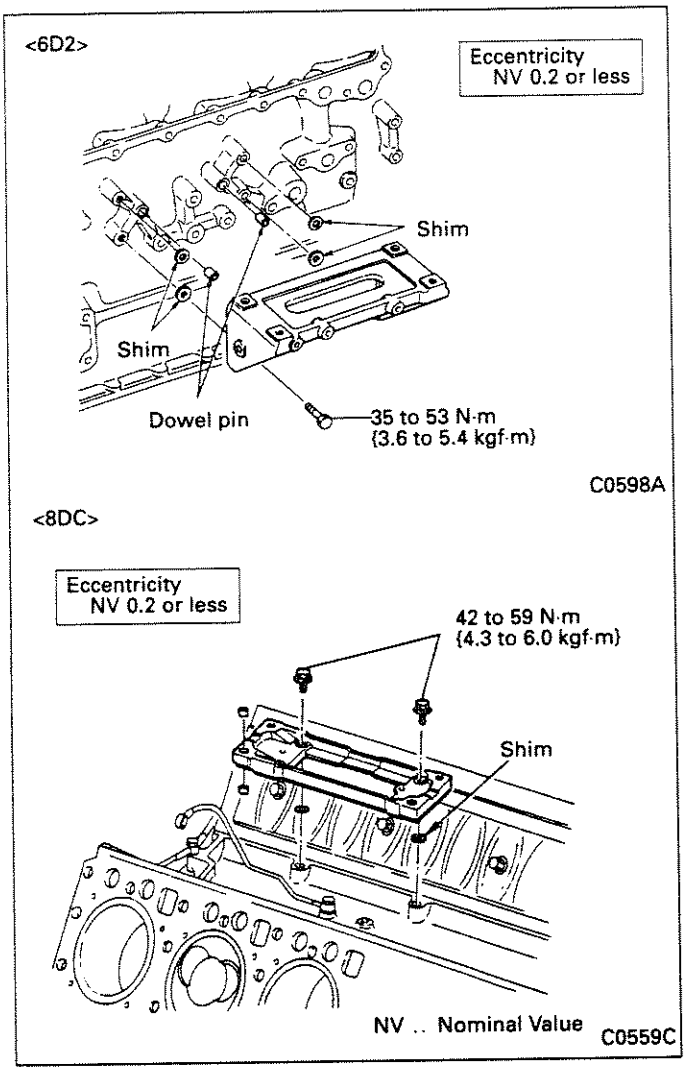

3) If the eccentricity between the mandrel and air compressor crankshaft is in excess of the nominal value, adjust by adding or removing injection pump bracket shims.

<When the measured value at point B is positive (+)>
Insert shims evenly to four places.
<When the measured value at point A is positive (+)>
Insert shims to the lower side of point C.
<When the measured value at point C is positive (+)>
Insert shims to the upper side of point A.

Shim inserting requirements

- The number of shims used in a single location must not exceed three.
- Top and bottom shims both at front and rear must be equal in thickness.
- The difference in number between right and left shims must not exceed one.

4) After adjustment, tighten injection pump bracket to the specified torque before confirmation.

(b) Installation of injection pump

1) Crank the engine to bring the No. 1 cylinder piston to the fuel injection timing position.
(Refer to Section 5.11.1.)

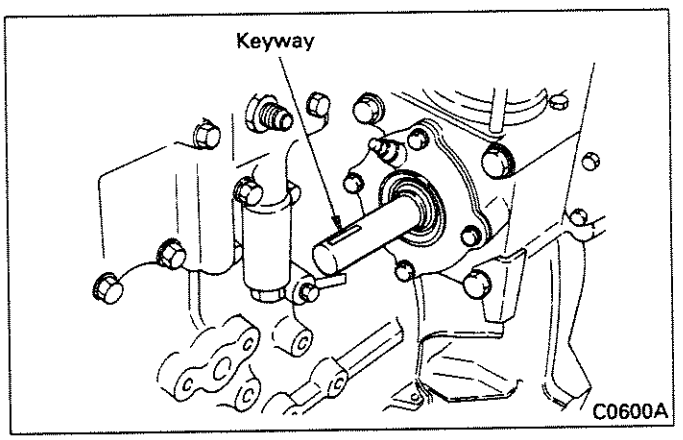

2) At that time, verify that the keyway of air compressor crankshaft faces upward. If not, rotate the crankshaft one complete turn.

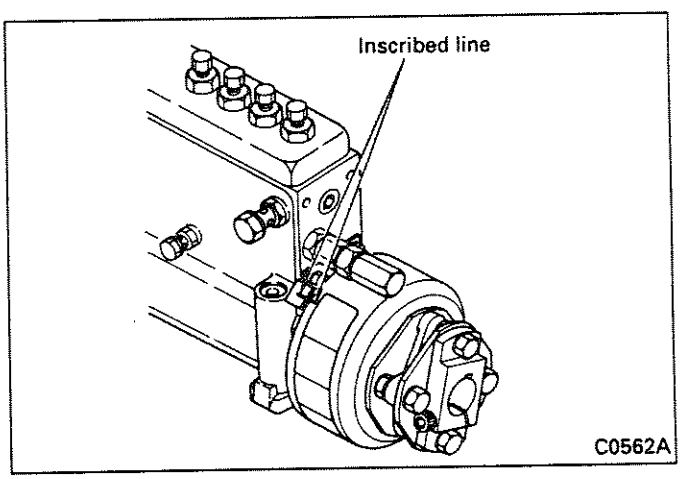

3) Align the pointer of the injection pump and the inscribed mark on the automatic timer.

4) Installation of injection pump

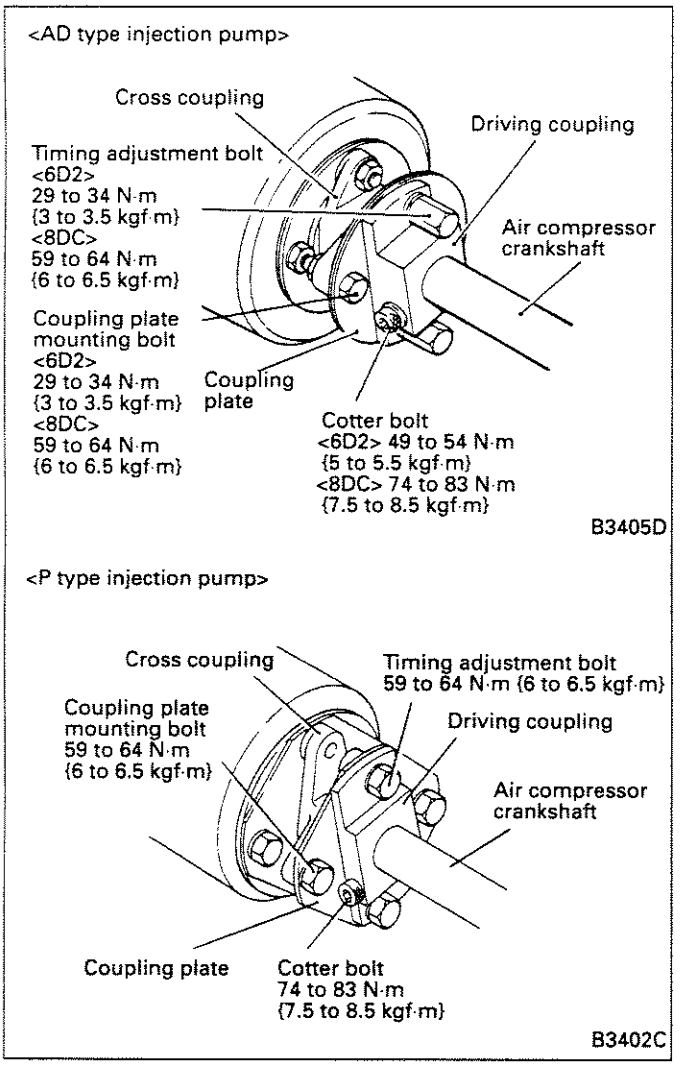

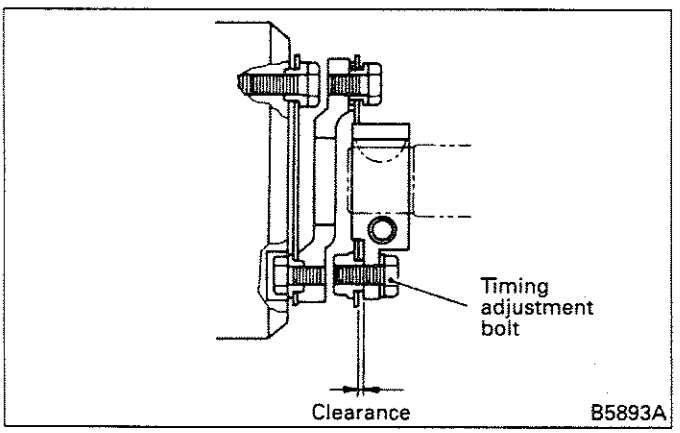

<6D2>

- Loosen the cotter bolt and remove the timing adjustment bolt. Remove the driving coupling from the coupling plate.
- Fit the driving coupling onto the air compressor crankshaft and push it toward the air compressor.
- Fit the injection pump onto the injection pump bracket.
- Temporarily fit the timing adjustment bolt onto the driving coupling. Slide the driving coupling until there is clearance of 0.5 mm or less between it and the coupling plate. Then, tighten the cotter bolt to the specified torque.
- Confirm that the injection starting timing is correctly adjusted as per items (b) 1) to 3), then tighten the timing adjustment bolt to the specified torque.

<8DC>

- Loosen the cotter bolt and adjusting bolt, then remove the coupling plate mounting bolts. Remove the driving coupling and coupling plate.
- Fit the driving coupling and coupling plate onto the air compressor crankshaft and push them toward the air compressor.
- Fit the injection pump onto the injection pump bracket.
- Fit the driving coupling and coupling plate using the coupling plate mounting bolts, tightening the bolts to the specified torque.
- Tighten the cotter bolt to the specified torque, ensuring that there is clearance of 0.5 mm or less between the driving coupling and coupling plate.
- Confirm that the injection starting timing is correctly adjusted as per items (b) 1) to 3), then tighten the timing adjustment bolt to the specified torque.

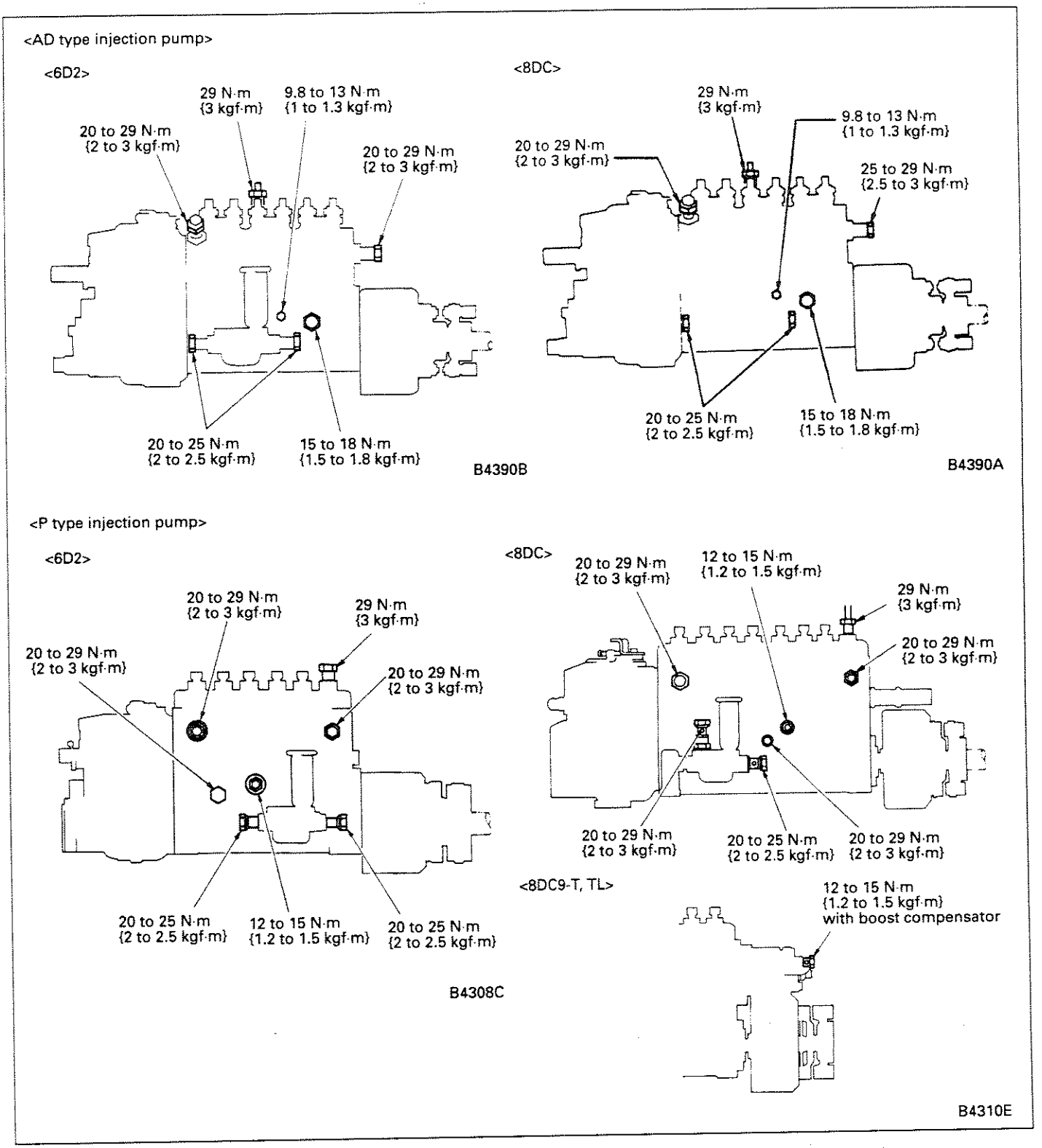

(c) Tighten each pipe to specification.

(d) After the injection pump has been installed, be sure to check and adjust, if necessary, the fuel injection start timing. (Refer to Section 5.11.1.)

5.2 AD Type Injection Pump

NOTE:

1. **When disassembling the injection pump, clean the workbench and keep all disassembled parts neatly arranged by the cylinder. Never change the combination of the plunger and plunger barrel, and that of delivery valve and delivery valve seat.**
2. **Special care should be used when disassembling and reassembling major parts.**
3. **For disassembly and reassembly, use the following special tools (Zexel products) and never apply excessive force or handle them carelessly.**

The following Zexel special tools should be used for injection pump maintenance:

Special tool name	Part No. (Zexel product No.)	Application
Injection Pump Special Tool Set (includes items marked with "*")	105790-1060	Injection pump disassembly and reassembly
Universal vice	105794-0090	Securing of bracket
Tappet pin	157931-3120	Supporting of tappet
Measuring device	*105782-4130	Measurement of camshaft end play
Wrench	*157910-1120	Removal and installation of screw
Guide	*157920-5400	Protection of oil seal
Roller pincers	*157921-3020	Removal and installation of tappet
Tappet pincers	157931-7120	
Plunger pincers	157921-6120	Removal and installation of plunger
Wrench	*157914-0500	Removal and installation of delivery valve holder
Extractor	*157925-6520	Removal of inner race
	*157925-0520	Removal of outer race (timer side)
	*157925-0120	Removal of outer race (governor side)
Reamer	157930-4620	Correction of pump housing
Fixing stand	105781-0430	Test and adjustment of injection pump
Measuring device	105782-6180	
	105782-4020	
Holder	157931-4400	
Nozzle holder wrench	157916-8220	

5.2.1 Disassembly, inspection and reassembly

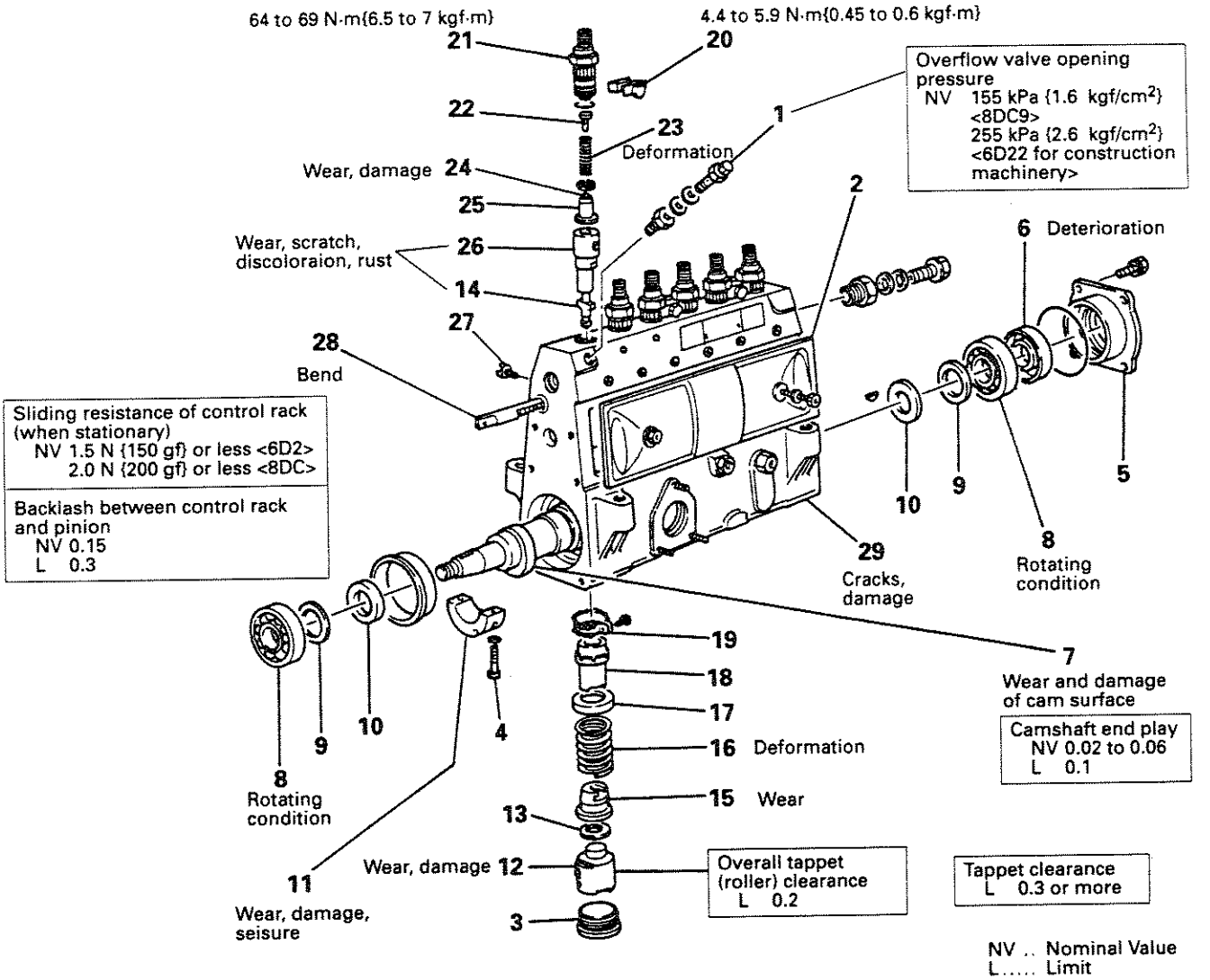

Disassembly sequence

1 Overflow valve
2 Housing cover
3 Screw
4 Screw
5 Bearing cover
6 Oil seal
7 Camshaft
8 Taper roller bearing
9 Shim
10 Ring
11 Center bearing
12 Tappet
13 Shim
14 Plunger
15 Lower spring seat
16 Plunger spring
17 Upper spring seat
18 Control sleeve
19 Pinion
20 Lock plate
21 Delivery valve holder
22 Stopper
23 Delivery valve spring
24 Delivery valve
25 Delivery valve seat
26 Plunger barrel
27 Screw
28 Control rack
29 Pump housing

D1566D

5.2.2 Testing and adjustment

Since injection volume adjustment values and measurement conditions vary according to configuration, please refer to a Zexel service station.

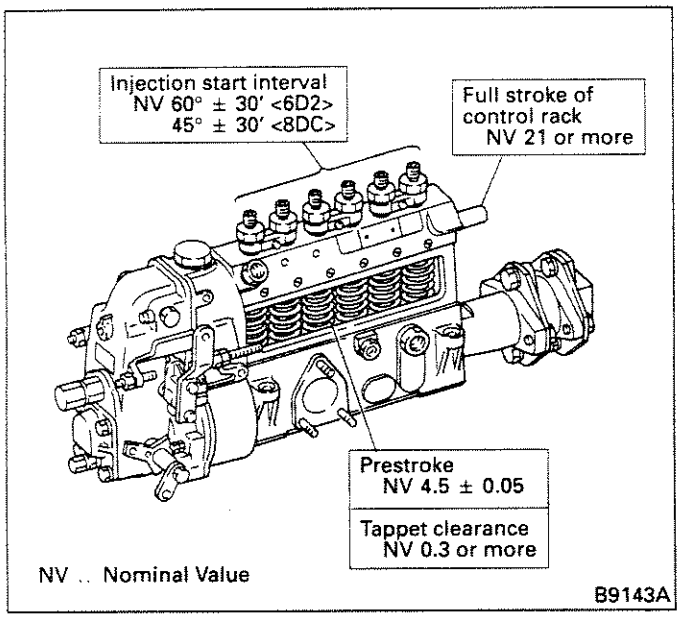

Injection sequence

1 – 2 – 3 – 6 – 2 – 4 <6D2>

1 – 2 – 7 – 3 – 4 – 5 – 6 – 8 <8DC>

NOTE:

1. **Supply oil to the injection pump cam chamber.**
2. **Adjust the injection amount after adjusting the governor.**

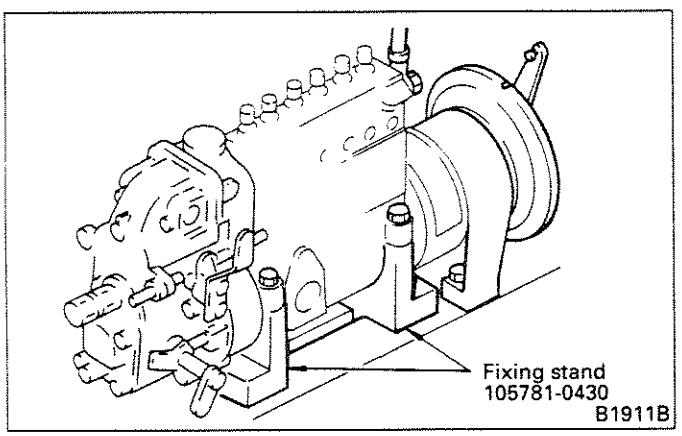

(1) Mount two Fixing Stands (special tools) onto the injection pump tester, then secure the injection pump onto the Fitting Stands.

NOTE:

Make sure that the center of coupling is aligned with that of injection pump so that the coupling and injection pump turn smoothly.

(2) Setting position "0" of control rack

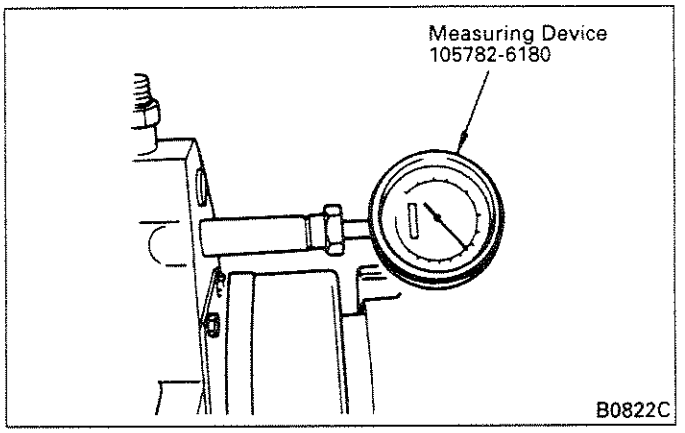

<With RSV governor>

(a) Keep the pump running at 750 rpm.

(b) Loosen the stopper bolt and pull the adjusting lever toward the non-injecting direction.

(c) Press the end of the Measuring Device all the way toward the governor and adjust the position of point "0" on the scale of the Measuring Device.

<With RFD governor>

(a) Fix the load control lever at the idling position.

(b) Let the pump run at 500 to 600 rpm and temporarily fix the speed control lever so that the governor will begin to provide control at the speed.

(c) Press the end of the Measuring Device all the way toward the governor and adjust the position of point "0" on the scale of the Measuring Device.

NOTE:

If the injection pump is not running at the speed mentioned above, position "0" won't be obtained even if the control rack is pressed with a strong pressure, and there will be danger of damage to the link mechanism of the pump.

(3) Checking stroke of control rack

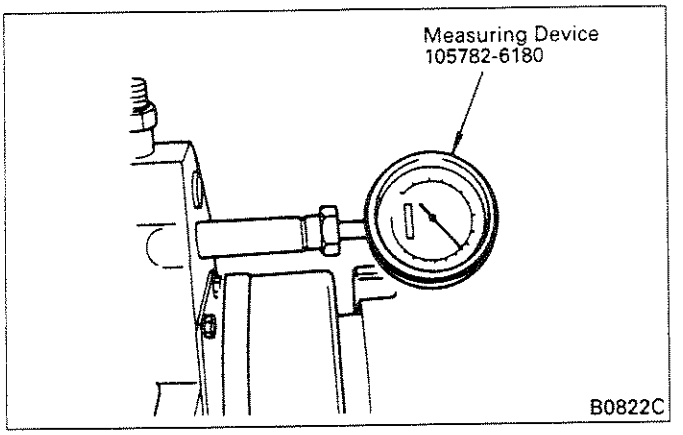

Move the control rack to confirm that the total stroke is over the specified value.

(4) Adjusting prestroke

(a) Pull the control rack out to the total injection position and secure it there. Remove the overflow valve and plug the hole.

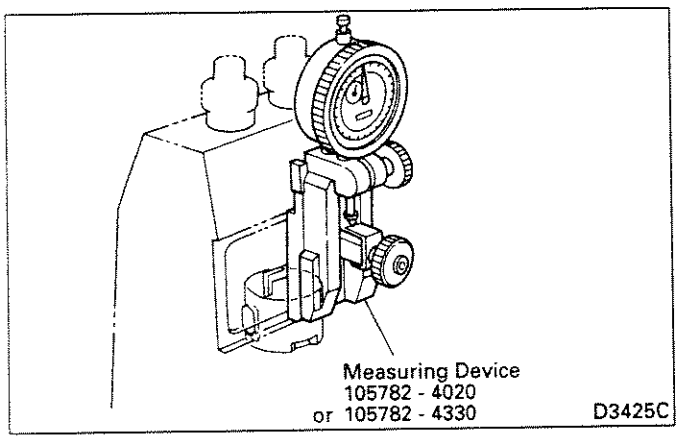

(b) Place the plunger of the No. 1 cylinder in the bottom dead center position and mount Measuring Device (special tool). Set the contactor on the tappet.

(c) Couple the injection pump and tester nozzle.

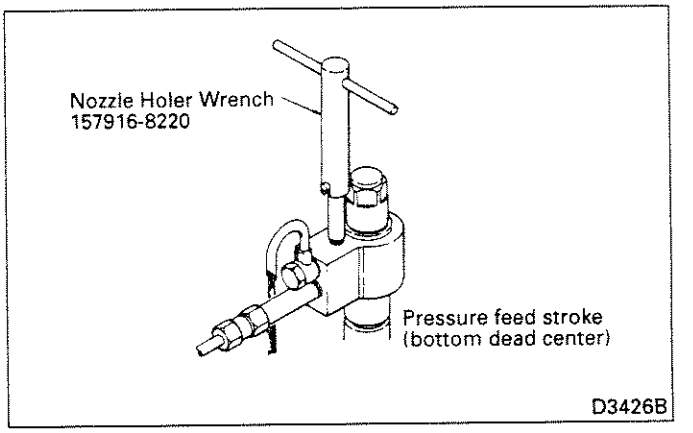

(d) Send a high pressure fuel into the injection pump to let the fuel flow out from the overflow pipe of the nozzle holder.

NOTE:

The pressure of the fuel forced into the injection pump must be higher than the delivery valve opening pressure.

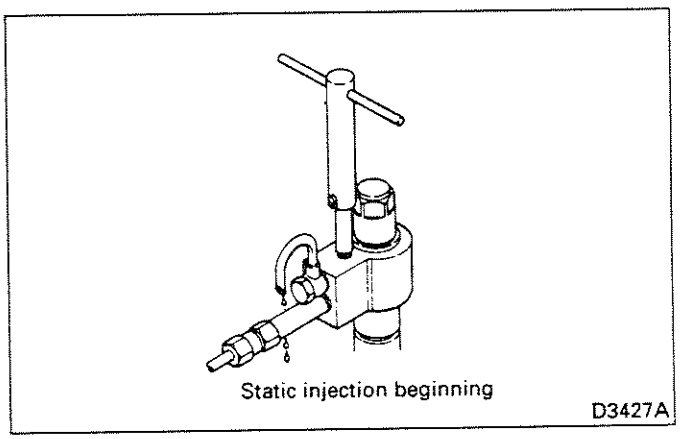

(e) Slowly turn the camshaft until the fuel ceases to flow from the overflow pipe of the nozzle holder (until static injection begins).

NOTE:

Make measurement by turning the camshaft clockwise.

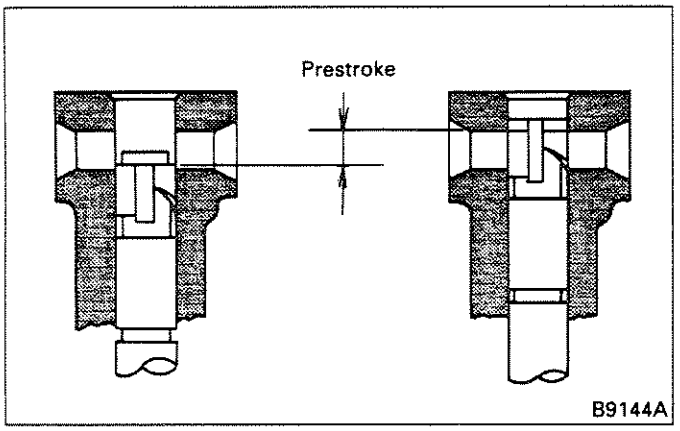

(f) Read the prestroke from the bottom dead center to the point where the fuel ceases to flow (static injection begins), using a dial gauge.

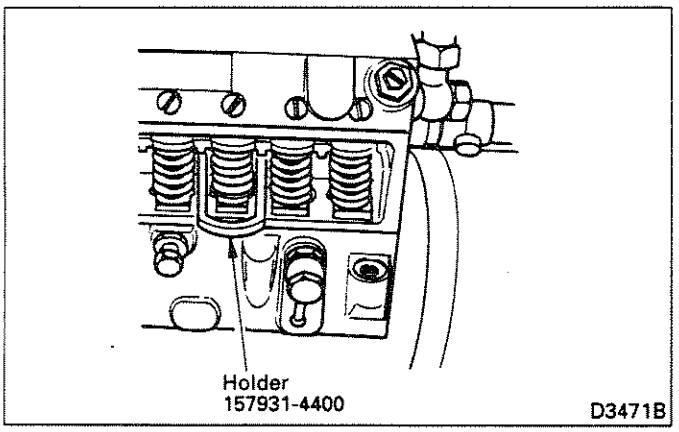

(g) If the prestroke is out of specification, adjust by shims.
Position the tappet at the top dead center and insert Holder (special tool) between the lower spring seat and the tappet.
Turning the camshaft will provide a clearance between the lower spring seat and tappet. Using this clearance, change the number of shims used as necessary to adjust the prestroke.
Add shims to make prestroke smaller.
Remove shims to make prestroke greater.

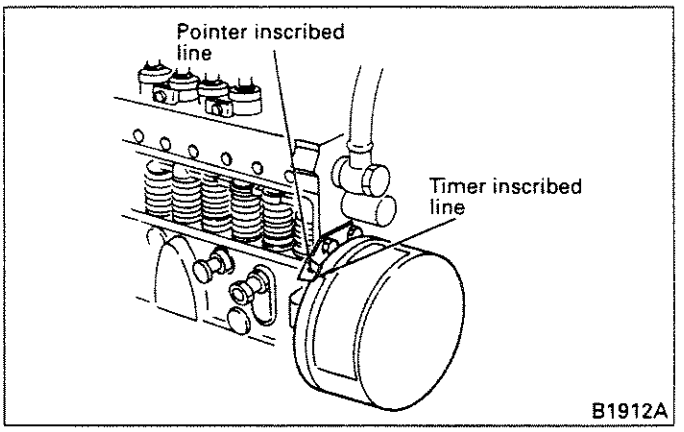

(h) After adjustment of the prestroke, check to see that, at the static injection beginning, the inscribed lines of the pointer and timer are in alignment.
If they are out of alignment, restamp a line on the automatic timer.
Perform the same procedure when the automatic timer has been replaced with a new one.

(5) Adjustment of injection start interval

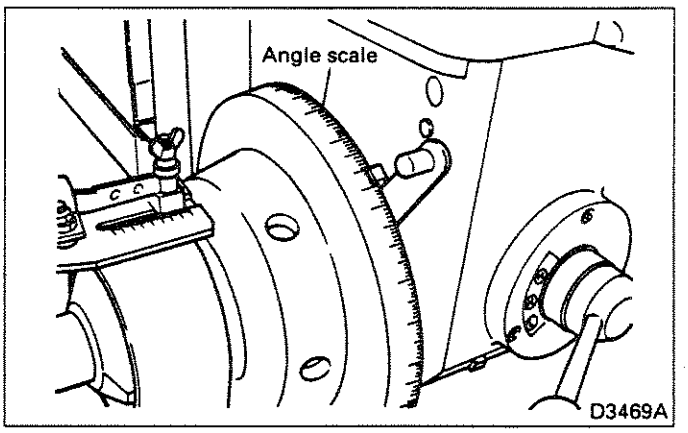

Using an angle scale, measure the injection start intervals between cylinders according to the injection sequence with the static injection start of No. 1 cylinder used as reference.
If the specified angle is not obtained, perform the same procedure as the prestroke adjustment.

NOTE:
Injection sequence
1 – 5 – 3 – 6 – 2 – 4 <6D2>
1 – 2 – 7 – 3 – 4 – 5 – 6 – 8 <8DC>

(6) Adjustment of tappet clearance

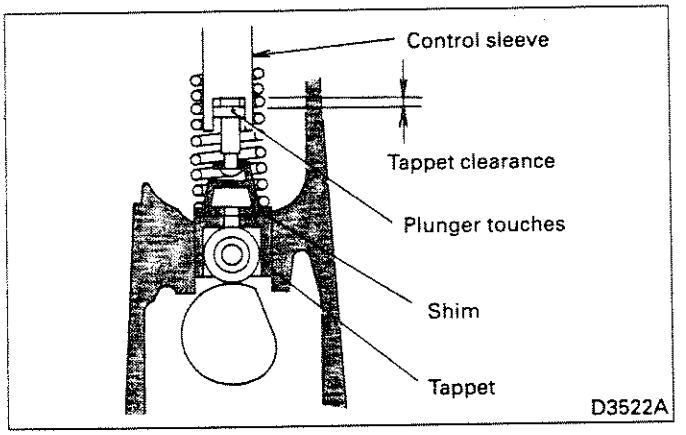

(a) Place the tappet in the top dead center position.
(b) Raise the tappet with a screwdriver, etc. until the driving face of the plunger touches the bottom end of the plunger barrel.
(c) Measure the stroke of the tappet from the top dead center to the point where the plunger barrel is touched.
(d) If the tappet clearance is less than the nominal value, adjust within the extent permitted by the injection start interval.
If correction within the permitted extent is impossible, set the prestroke of the No. 1 cylinder to the maximum of the set value and readjust.

(7) Adjustment of fuel injection amount

If the injection amount is out of specification, adjust by the following procedures.

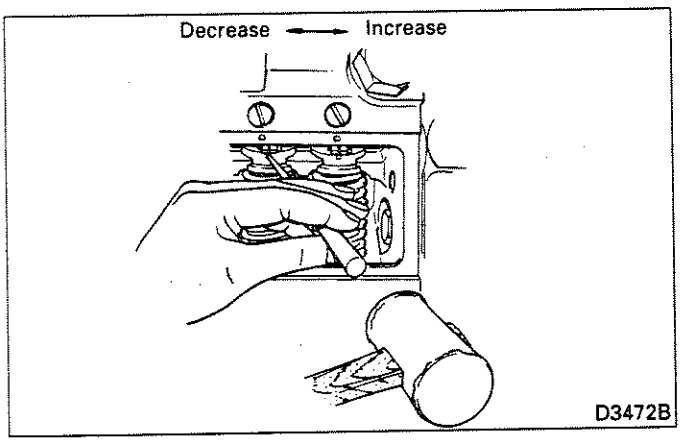

(a) Loosen the screw of the pinion.
(b) While blocking movement of the control rack, turn the control sleeve with an adjusting rod.
(c) Tighten the screw of the pinion.

NOTE:

1. **A maladjusted injection amount will produce marked effects on engine performance. Make sure the injection amount is carefully adjusted.**
2. **The injection amount varies on different nozzles and pipes. Make sure that the measuring conditions are observed.**
3. **Injection amount uneven ratio**

$$\text{Uneven ratio (+)} = \frac{\text{Maximum injection amount in each cylinder} - \text{Average injection amount of each cylinder}}{\text{Average injection amount of each cylinder}} \times 100\ (\%)$$

$$\text{Uneven ratio (–)} = \frac{\text{Maximum injection amount in each cylinder} - \text{Average injection amount of each cylinder}}{\text{Average injection amount of each cylinder}} \times 100\ (\%)$$

(8) Adaptation to engine

After the governor has been adjusted, measure the fuel injection rate adaptable to the engine.

(9) Inspection of fuel and oil leaks

- Fuel leaks from delivery valve attaching position and other parts
- Oil leaks from oil seals and other parts

(10) Inspection of parts

Check parts for unusual noise and bearings for excessive heat.

5.3 P Type Injection Pump

NOTE:

1. **When disassembling the injection pump, clean the workbench and keep all disassembled parts neatly arranged by the cylinder. Never change the combination of the plunger and plunger barrel, and that of delivery valve and delivery valve seat.**
2. **Special care should be used when disassembling and reassembling major parts.**
3. **For disassembly and reassembly, use the following special tools and never apply excessive force or handle them carelessly.**

The following Zexel special tools should be used for injection pump maintenance:

Special tool name	Part No. (Zexel product No.)	Application
Injection pump special tool set (includes items marked with "*")	105790-7050	Injection pump disassembly and reassembly
Universal vice	157944-8520	Securing bracket
Bracket	157944-8620	Securing injection pump
Special wrench	157924-2520	Preventing timer from turning
Tappet holder	*157931-4700	Supporting tappets
Box wrench	157914-0300	Removal and installation of round timer nuts (width of 2 faces: 19)
Extractor	*157926-7020	Extracting timer (M32 x 1.5)
	157926-7220	Extracting timer (M26 x 1.5, M32 x 1.5)
Wrench	157915-0100	Removal and installation of round governor nuts
Extractor	*157926-5320	Extracting flyweights
Oil seal guide	*157920-5500	Protecting bearing cover oil seal
Extractor	*157920-7720	Removal of bearing cover
Tappet insert	*157921-8020	Removal and installation of tappets
Shaft	*157921-8900	Removal and installation of tappets
Plunger insert	157921-4820	Removal and installation of plungers
Extractor	157921-5620	Removal and installation of control sleeves and upper spring seats
	*105792-0030	Removal of plunger block assembly
Special wrench	*157915-6500	Removal and installation of screw bushings
Bearing extractor	*157925-7120	Removal of inner bearing race
	*157925-2020	Removal of outer bearing race
Plate	*157944-3520	Disassembling plunger block assembly
Socket wrench	*157914-0500	Removal and installation of delivery valve holders (width across flats: 22)
Insert O-ring	*105792-0000	Inserting O-rings into pump housing
Plate	*157828-7200	Assembling camshaft
Measuring device	*105782-4140	Measuring camshaft end play
Nozzle and nozzle holder assembly	105780-8140	Testing and adjustment
Nozzle	105780-0000	Testing and adjustment
Nozzle holder	105780-2080	Testing and adjustment
Fixing stand	105781-0170	Securing injection pump on injection pump tester
Measuring device	105782-4210	Measuring control rod positions
	105782-4270	Measuring prestroke amounts

5.3.1 Disassembly, inspection and reassembly

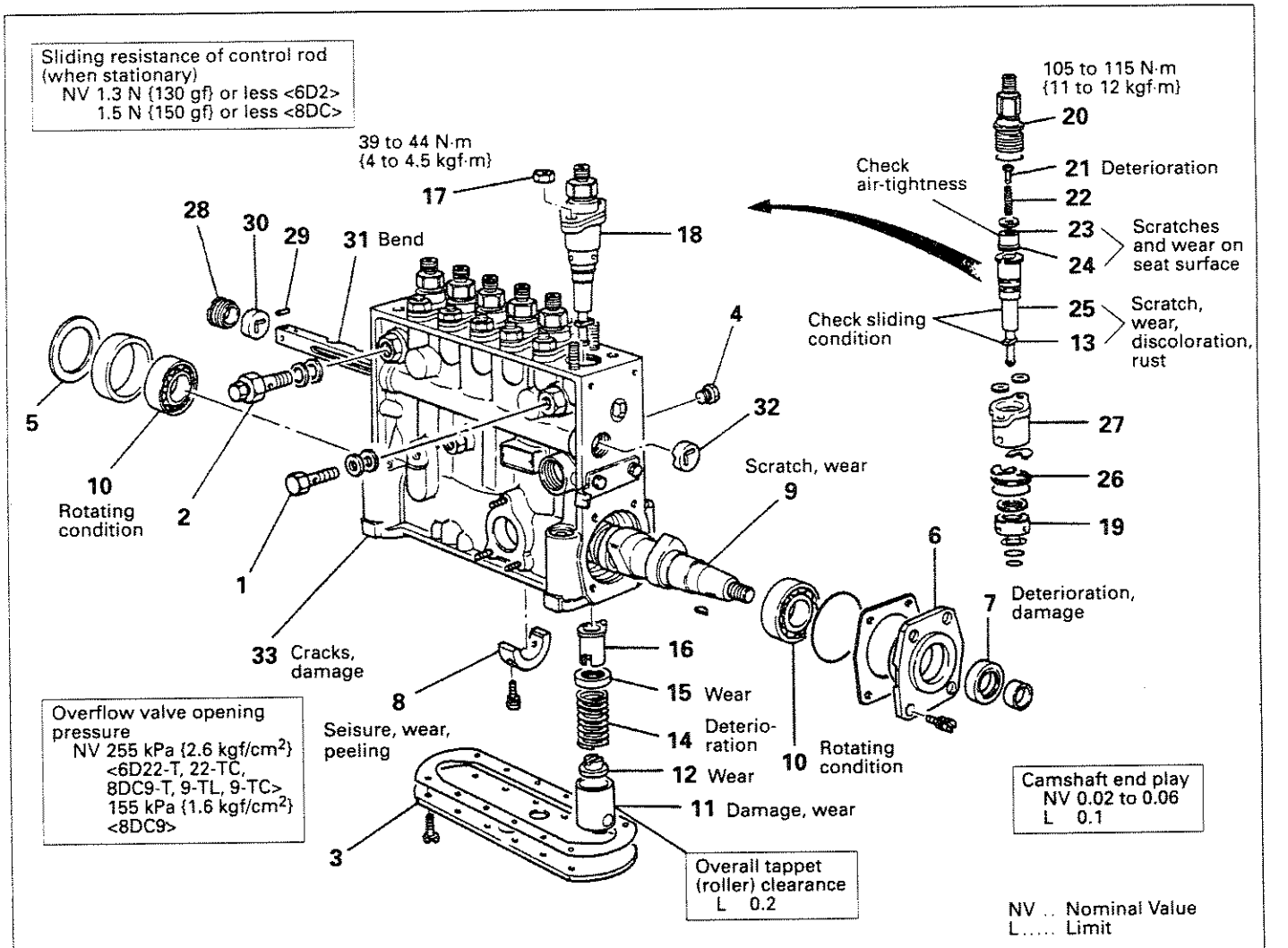

Disassembly sequence

1 Pipe joint bolt (or Overflow valve)
2 Overflow valve (or Pipe joint bolt)
3 Bottom cover
4 Screw plug
5 Shim
6 Bearing cover
7 Oil seal
8 Center bearing
9 Camshaft
10 Roller bearing
11 Tappet assembly
12 Lower spring seat
13 Plunger
14 Plunger spring
15 Upper spring seat
16 Control sleeve
17 Nut
18 Plunger block assembly
19 Deflector
20 Delivery valve holder
21 Stopper
22 Delivery valve spring
23 Delivery valve
24 Delivery valve seat
25 Plunger barrel
26 Distance ring
27 Flange sleeve
28 Screw bushing
29 Pin
30 Bushing
31 Control rod
32 Bushing
33 Pump housing

Precautions when removing and fitting delivery valve holder

Before removing or fitting only a delivery valve holder, first confirm that the two nuts that hold the flange sleeve down are completely tight.
If a delivery valve holder is removed or fitted with the nuts loose, the flange sleeve can move and thus alter the fuel injection volume.

5.3.2 Testing and adjustment

Since injection volume adjustment values and measurement conditions vary according to configuration, please refer to a Zexel service station.

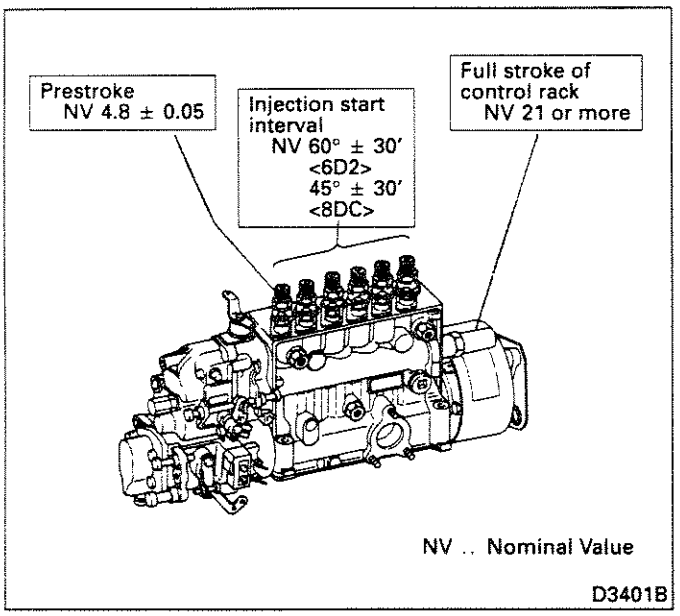

Injection sequence

1 – 5 – 3 – 6 – 2 – 4 <6D2>

1 – 2 – 7 – 3 – 4 – 5 – 6 – 8 <8DC>

NOTE:

1. **Fill the injection pump cam chamber with oil.**
2. **Adjust the injection rate after adjusting the governor.**

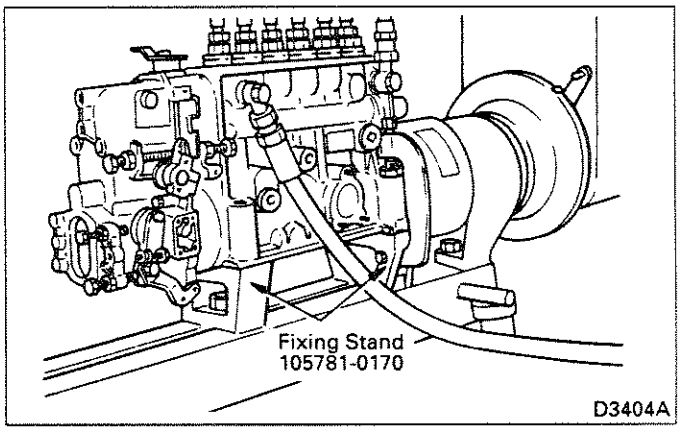

(1) Install and secure two injection pump tester Fixing Stands (special tool) to the injection pump.

NOTE:

Make sure that the center of coupling is aligned with that of injection pump so that the coupling and injection pump turn smoothly.

(2) Control rod "0" position setting

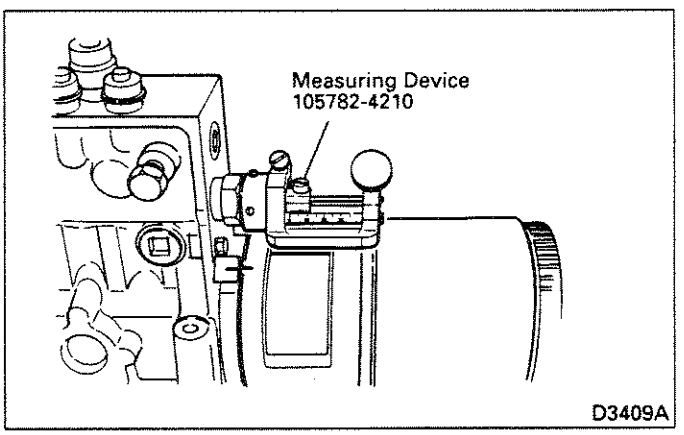

<With RSV governor>

(a) Maintain a pump speed of 750 rpm.
(b) Loosen the stopper bolt and pull the adjusting lever in the "injection stop" direction.
(c) Push the end of the measuring device fully against the side of the governor and zero the Measuring Device's scale.

<With RFD governor>

(a) Set the load control lever in the idling position.
(b) Run the pump at a speed of 500 to 600 rpm and set the speed control lever such that the governor just starts to exert control.

(c) Push the end of the Measuring Device fully against the side of the governor and zero the Measuring Device's scale.

NOTE:

1. **Unless the injection pump is run at the speed given above, the scale cannot be zeroed regardless of how hard the control rod is pushed. Also, the governor's link mechanism may be damaged.**
2. **The damper springs must be removed.**
3. **If a boost compensator is fitted, it must be removed before the measuring device is fitted.**

(3) Control rod stroke check

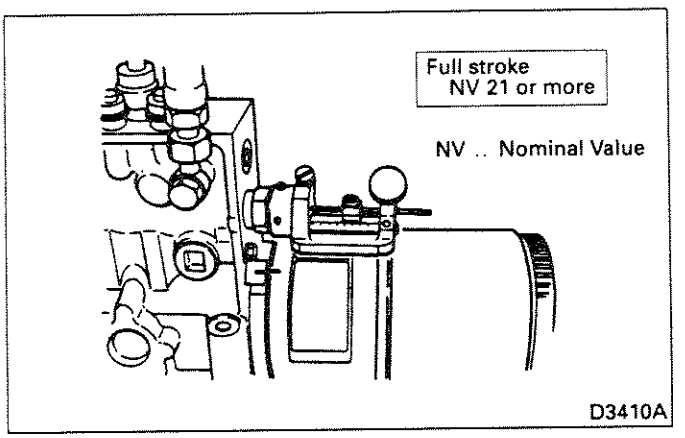

Move the control rod to ensure that its entire stroke is more than as specified.
Also confirm that the start spring and idling spring move the control rod smoothly in the maximum injection volume direction.

(4) Adjustment of prestroke

Remove the overflow valve and install the blind plug.

(a) Remove the delivery valve holder, spring, delivery valve, and gasket from the No. 1 cylinder on the governor end.

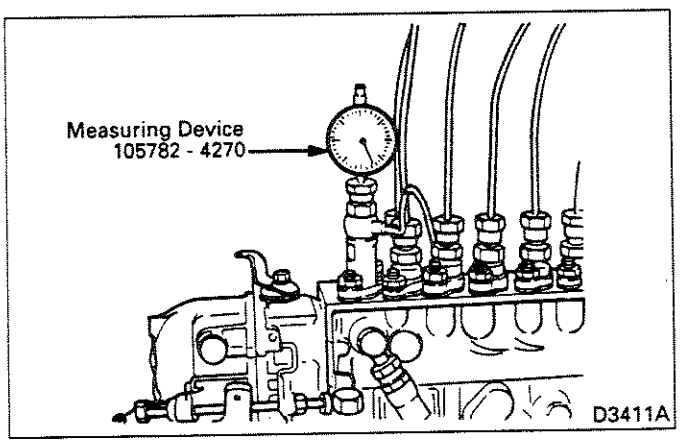

(b) Install Measuring Device (special tool) to the flange sleeve.

(c) Turn the pump tester flywheel to determine the bottom dead center of the plunger with the dial indicator.

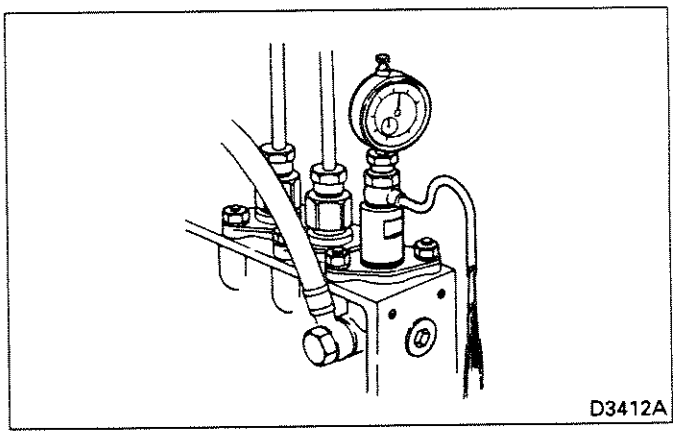

(d) With the control rod set in the full position, send fuel under high pressure to the injection pump and let it flow out from the overflow pipe.

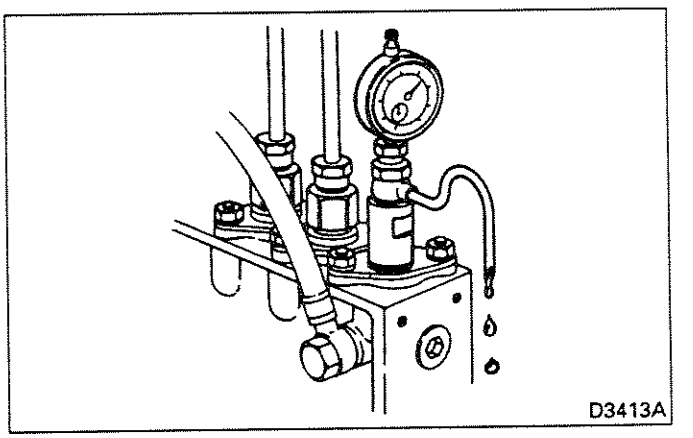

(e) Slowly turn the pump tester flywheel clockwise until no more fuel flows out from the overflow pipe (static injection start).

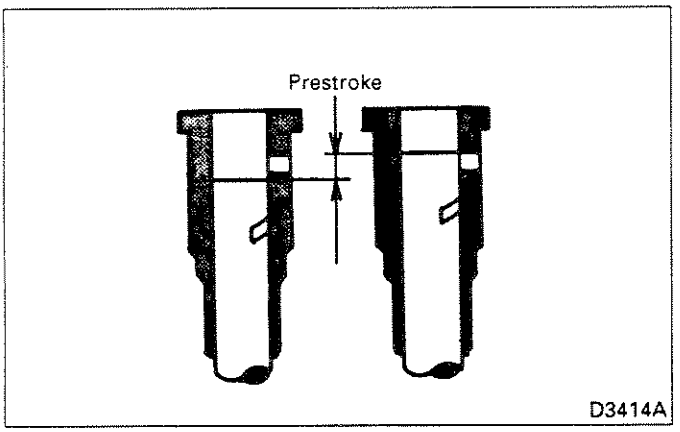

(f) Measure the plunger prestroke from BDC to the point where fuel stops flowing (static injection start).

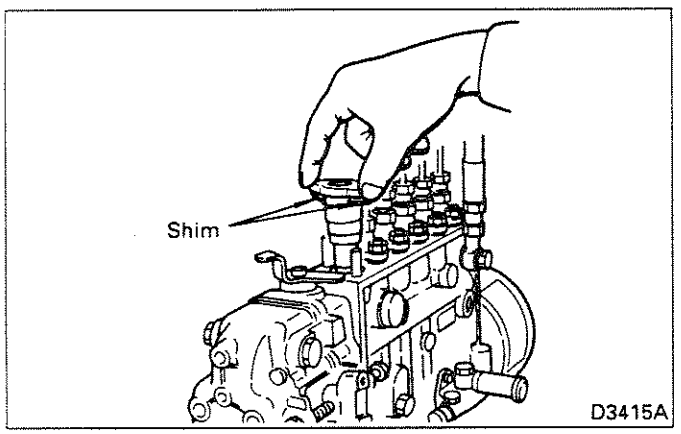

(g) If the prestroke is out of specification, adjust by varying shims between flange sleeve and pump housing.

Shim thickness:
0.5 to 1.975, 59 types in 0.025 steps

Use thicker shim to increase the stroke; thinner one to decrease the stroke.

NOTE:
When installing the plunger block, apply grease to each O-ring. First, install the O-ring under the plunger barrel into the pump housing; then, apply grease to plunger barrel skirt.

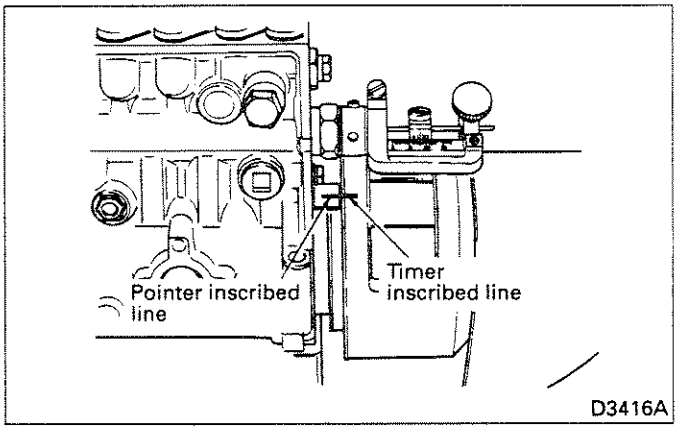

(h) After making prestroke adjustments, confirm that the inscribed lines on the timer and pointer are aligned with each other. If they are not aligned, inscribe a new line on the timer. The same instructions apply if the automatic timer is replaced with a new one.

(5) Adjustment of injection start interval

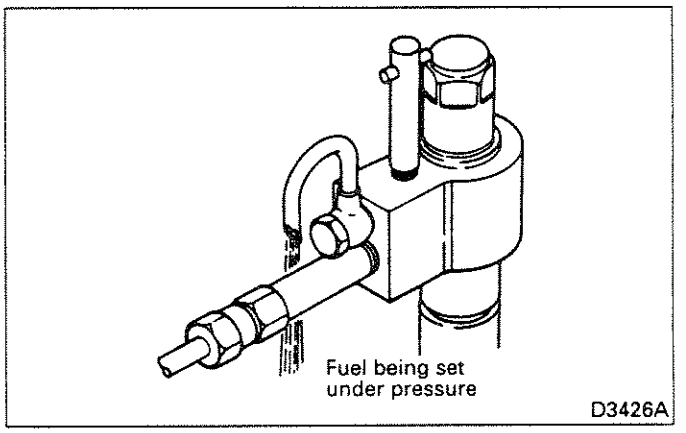

(a) Set the static injection start position of No. 1 cylinder with the pump tester dial.

(b) Feed high-pressure fuel into the injection pump to let the fuel flow out from the overflow pipe of the tester nozzle.

NOTE:
The fuel pressure must be higher than the delivery valve opening pressure.

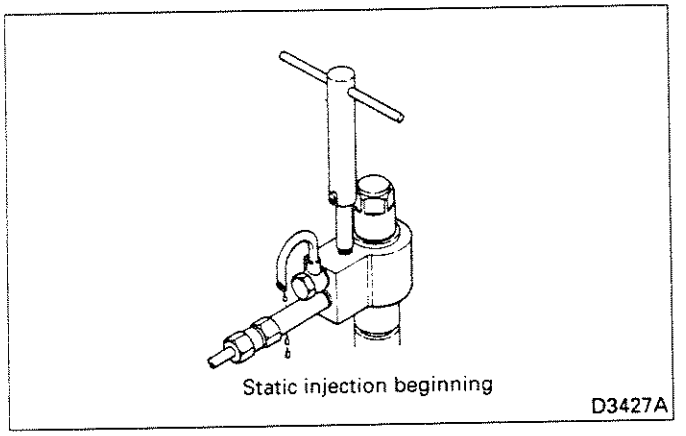

(c) Slowly turn the pump tester flywheel clockwise until the fuel stops flowing out from the tester nozzle.
Read the interval between static injection starts according to the injection sequence.

(d) If the injection start intervals are not up to specification, adjust by using the same procedure as the prestroke adjustment.

(6) Adjustment of fuel injection rate

Install the overflow valve and hose to the pump.
Use a measuring cylinder to measure the fuel injection rate and uneven ratio to see if they are up to specification with the specified rack position and speed.
Adjust as follows if the measured values are out of specification.

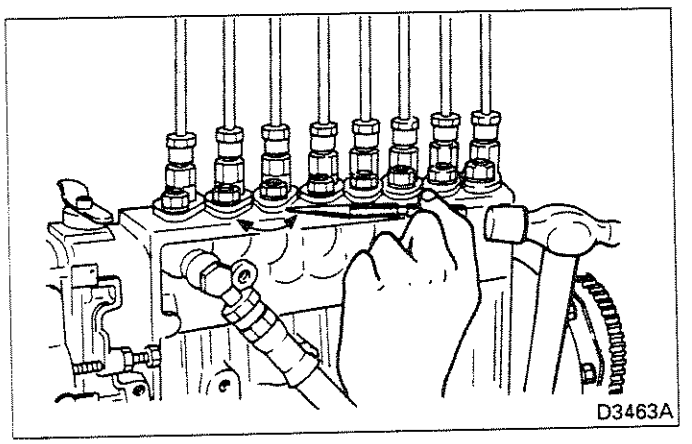

(a) Loosen two nuts that secure the flange sleeve.
(b) Tap the flange sleeve to give it a turn.
(c) Tighten nuts to specification to secure the flange sleeve (39 to 44 N·m {4 to 4.5 kgf·m}).
Repeat these steps.

NOTE:

1. **Use special care to make the adjustment. Improper or failure of adjustment greatly influences engine performance.**
2. **The fuel injection rate varies with nozzle and pipe used. Strictly observe the measuring requirements.**
3. **Injection rate uneven ratio**

$$\text{Uneven ratio (+)} = \frac{\text{Maximum injection amount in each cylinder} - \text{Average injection amount of each cylinder}}{\text{Average injection amount of each cylinder}} \times 100\ (\%)$$

$$\text{Uneven ratio (–)} = \frac{\text{Maximum injection amount in each cylinder} - \text{Average injection amount of each cylinder}}{\text{Average injection amount of each cylinder}} \times 100\ (\%)$$

(7) Adjustment of smoke limiter

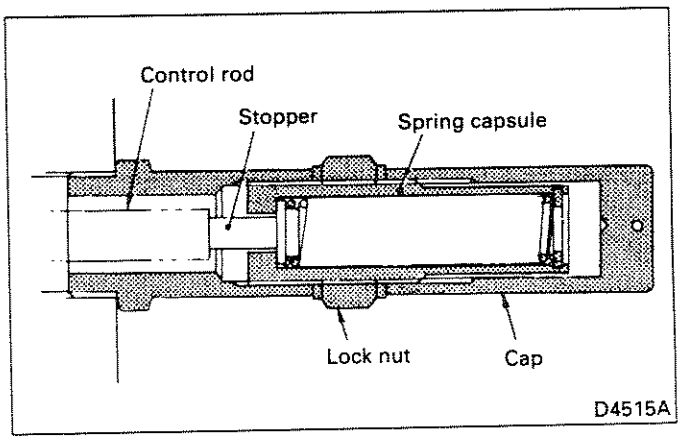

Place the load control lever in the full-load position.
Run the pump at the specified speed to place the control rod in the specified position.
Remove Measuring Device (special tool) and install the smoke set assembly (without cap). Tighten the spring capsule until the stopper comes in contact with the control rod.

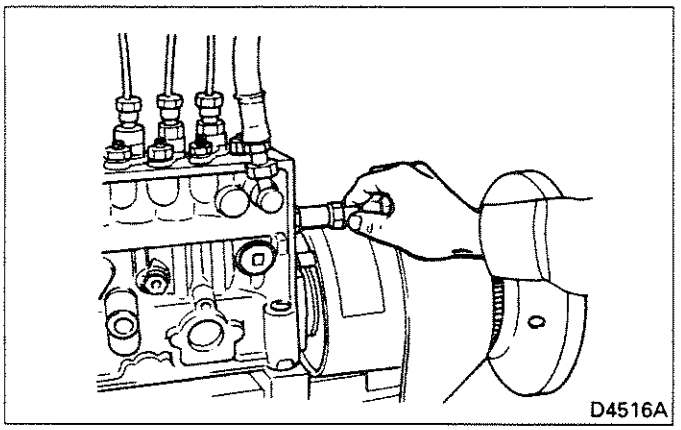

With the pump run at 100 rpm, measure the fuel injection rate. If the rate is out of specification, retighten or back off the spring capsule.

Run the pump at 700 rpm and ensure that the fuel injection rate is up to specification. Secure the spring capsule with lock nut, then mount the cap.

(8) Adaptation to engine

After the governor has been adjusted, measure the fuel injection rate adaptable to the engine.

(9) Diesel fuel and oil leak check

- Diesel fuel leak from delivery valve mounting area and other parts.
- Oil leak from oil seals and other parts.

(10) Miscellaneous check

Check for unusual noise and overheated bearings.

5.4 RSV Type Governor

The following Zexel special tools should be used for governor maintenance:

Special tool name		Part No. (Zexel product No.)	Application
Handle		157910-1120	Removal and installation of lock nut
Socket wrench		157914-0500	
Special wrench		157915-0100	Removal and installation of round nut
Wrench		157916-2620	Adjustment of Ungleich
Extractor	AD type injection pump	157926-5110	Removal and installation of flyweight
	P type injection pump	157926-5320	

5.4.1 Disassembly, inspection and reassembly

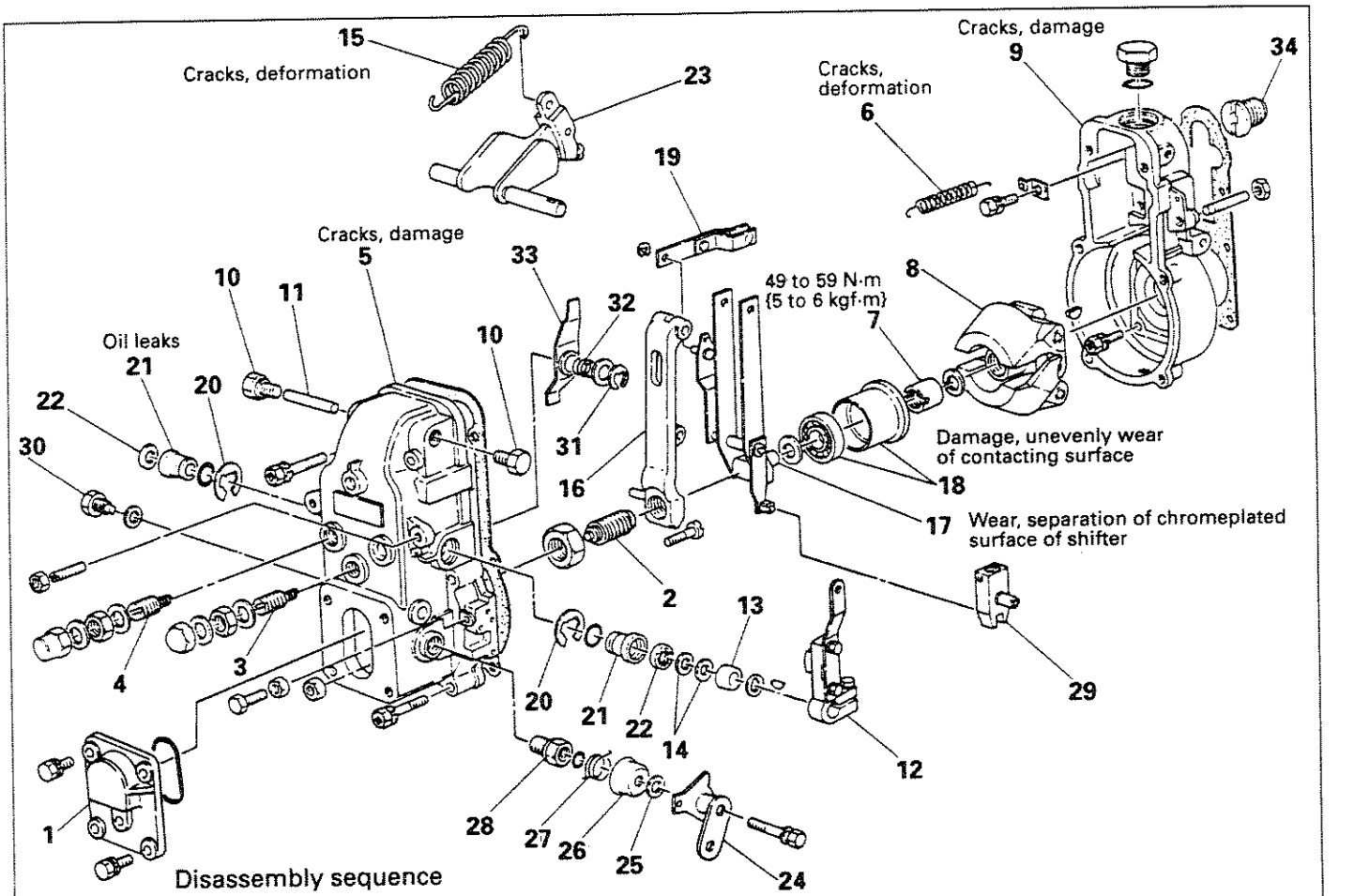

Disassembly sequence

1 Cover
2 Ungleich spring or idling spring
3 Idling sub spring
4 Torque spring
5 Governor cover
6 Start spring
7 Round nut
8 Flyweight
9 Governor housing
10 Plug
11 Tension lever shaft
12 Adjusting lever
13 Collar
14 Shim
15 Governor spring
16 Tension lever
⑰ Guide lever assembly
⑱ Sleeve
19 Shackle
20 Snap ring
21 Bushing
22 Oil seal
23 Swivel lever
24 Stop lever
25 Shim
26 Spring cap
27 Return spring
28 Bushing
29 Sliding lever
30 Bolt
31 Snap ring
32 Spring
33 Torque control lever
34 Adaptor

For parts with an encircled number, refer to Disassembly Procedure that follows.
For reassembly, reverse the order of disassembly.

NOTE:
1. **Do not remove the shackle and sleeve from the guide lever unless replacement is necessary.**
2. **Do not remove the swivel lever from the governor cover unless parts replacement is necessary or when its motion is not smooth.**
3. **Do not remove the governor housing unless oil leak is evident or parts replacement is necessary. If it needs to be removed, use Tappet Insert (special tool) to make sure that the camshaft will not contact with the tappet.**

B9150A

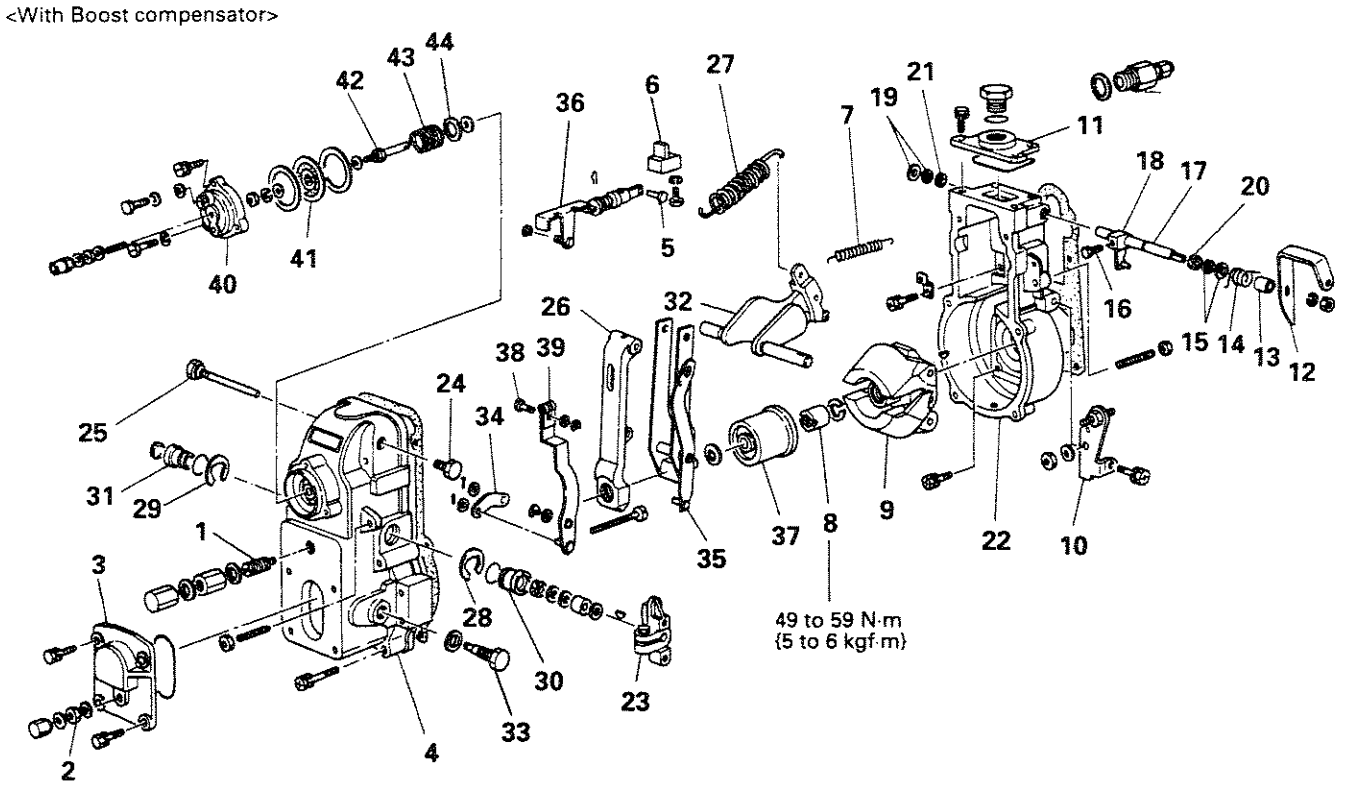

Disassembly sequence

1	Idling sub spring	16	Bolt	31	Bushing
2	Lock nut	17	Shaft	32	Swivel lever
3	Cover	18	Lever	33	Bolt
4	Governor cover	19	Washer	34	Link
5	Pin	20	Oil seal	㉟	Guide lever assembly
6	Connector	21	Oil seal	36	Link
7	Start spring	22	Governor housing	㊲	Sleeve
8	Round nut	23	Adjusting lever	38	Pin
9	Flyweight	24	Plug	39	Lever
10	Bracket	25	Tension lever shaft	40	Cover
11	Cover	26	Tension lever	41	Diaphragm
12	Stop lever	27	Governor spring	42	Push rod
13	Collar	28	Snap ring	43	Boost compensator spring
14	Return spring	29	Snap ring	44	Adjusting shim
15	Washer	30	Bushing		

For parts with an encircled number, refer to Disassembly Procedure that follows.
For reassembly, reverse the order of disassembly.

NOTE:

1. **Do not remove the shackle and sleeve from the guide lever unless replacement is necessary.**
2. **Do not remove the swivel lever from the governor cover unless parts replacement is necessary or when its motion is not smooth.**
3. **Do not remove the governor housing unless oil leak is evident or parts replacement is necessary. If it needs to be removed, use Tappet Insert (special tool) to make sure that the camshaft will not contact with the tappet.**

B6011A

Shifter assembly dimensions

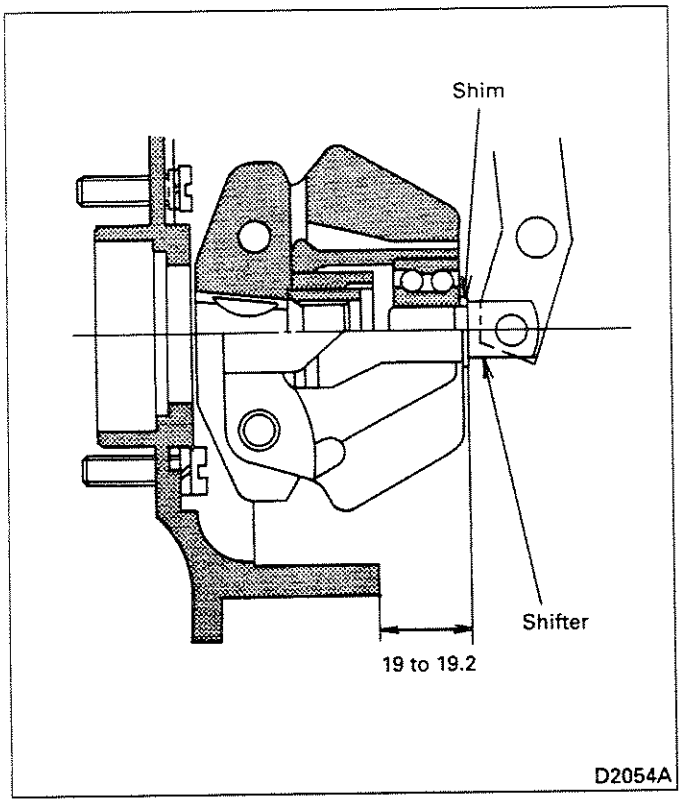

When the shifter and sleeve are assembled, the shifter's assembly dimensions are adjusted using the shims. Therefore, do not rearrange the shims.
If the shim needs to be replaced, install the associated parts into position. Select the shim of a correct thickness to obtain the specified dimension between the housing end face and shifter.

Shim thickness (6 types): 0.2, 0.3, 0.4, 0.5, 1.0, 1.5

NOTE:
Measure the dimension as assembled without lifting the flyweights.

5.4.2 Testing and adjustment

The performance curves used when making governor adjustments vary according to the governor configuration. Please refer to a Zexel service station for details.

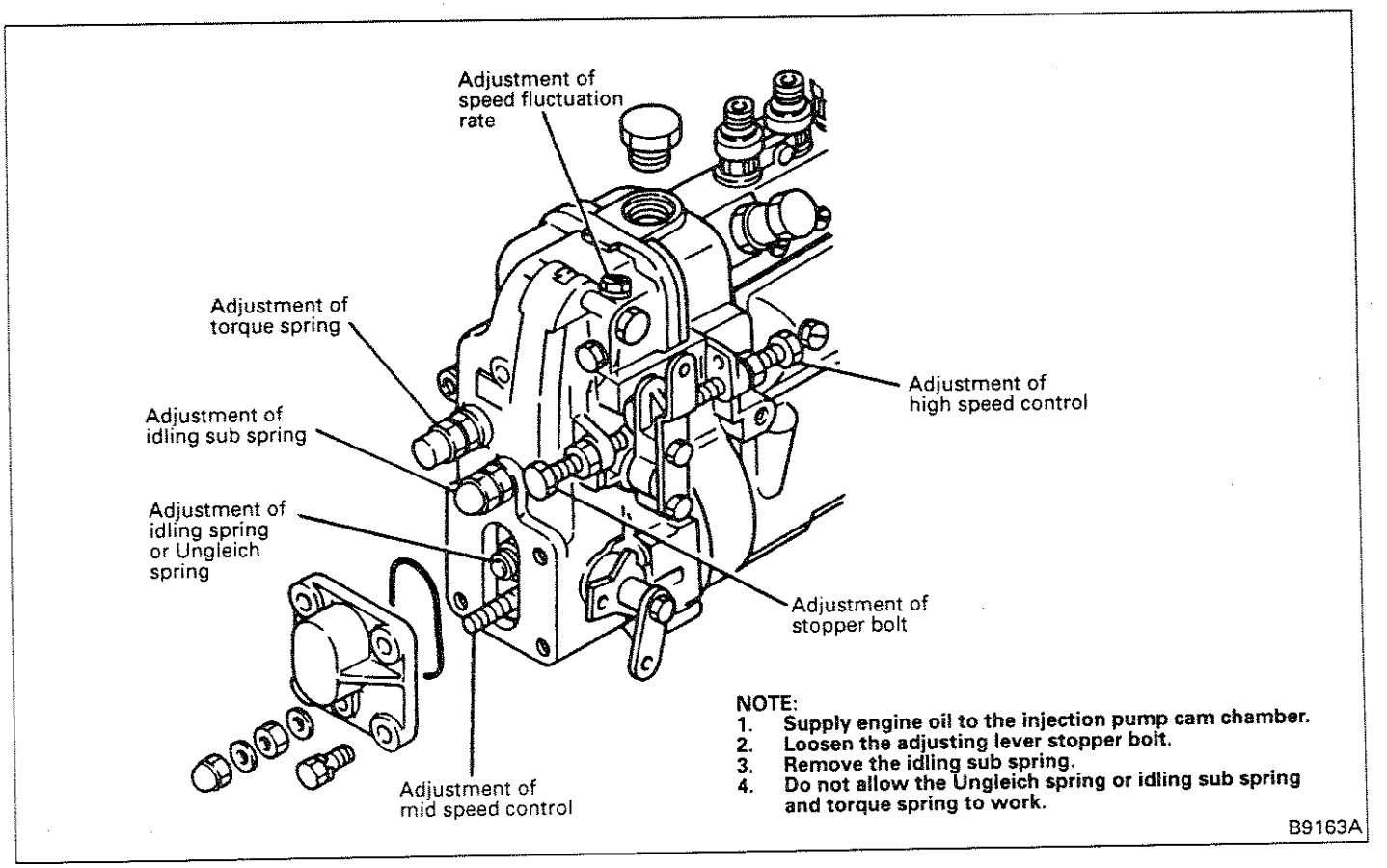

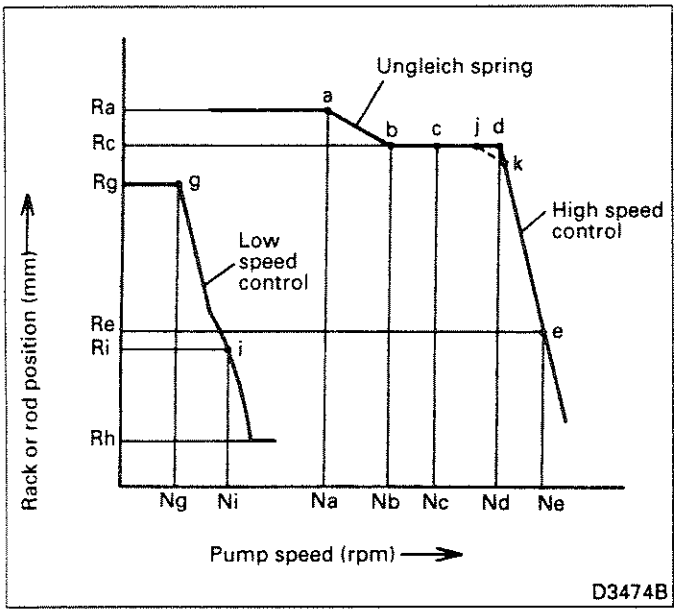

Adjust the relationship between pump speed and the rack or rod position to specified governor performance curve by the following procedure.

(1) "0" position setting of control rack <AD type pump>
[Refer to Section 5.2.2 (2).]
"0" position setting of control rod <P type pump>
[Refer to Section 5.3.2 (2).]

(2) Install the angle scale plate for fixing the adjusting lever.

(3) Temporary adjustment of high speed control

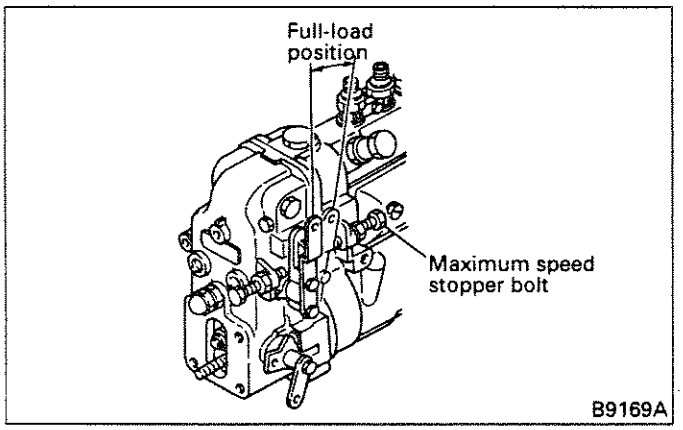

With the adjusting lever in full position, adjust the maximum speed stopper bolt so that high speed control starts to work when the pump speed is "Nd".

(4) Adjustment of intermediate speed control

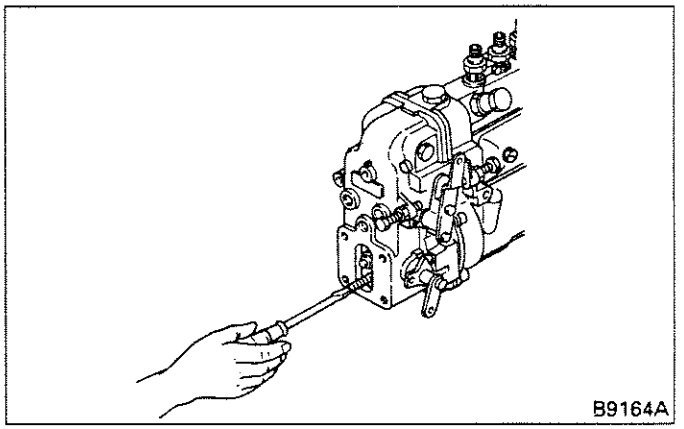

Adjust the full-load stopper bolt so that the pump speed becomes "Nc" which is slightly lower than "Nd".

(5) Adjustment of Ungleich spring
(governor with Ungleich spring only)

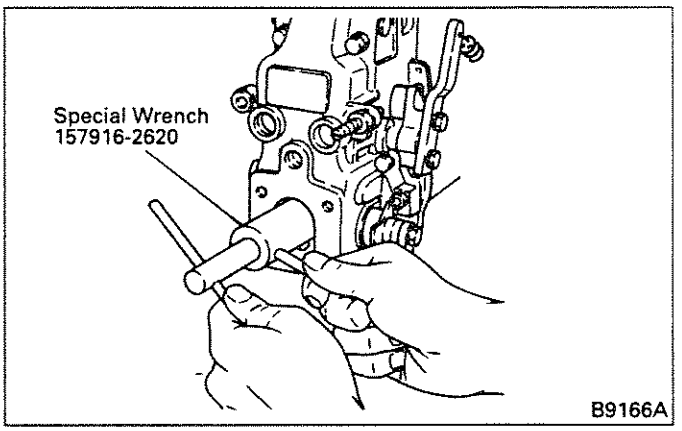

(a) Keep the pump running at a speed which is slightly lower than "Na" (speed at which Ungleich spring starts to work).
(b) Fix the adjusting lever at the full position.
(c) Using Wrench (special tool), tighten the Ungleich spring so that the rack will move from "Rc" to "Ra". Fix the spring with lock nut.
(d) Check that the pump speed is "Na" and "Nb" when the rack position is "Ra" and "Rc", respectively.

(6) Adjustment of idling spring
(governor with idling spring only)

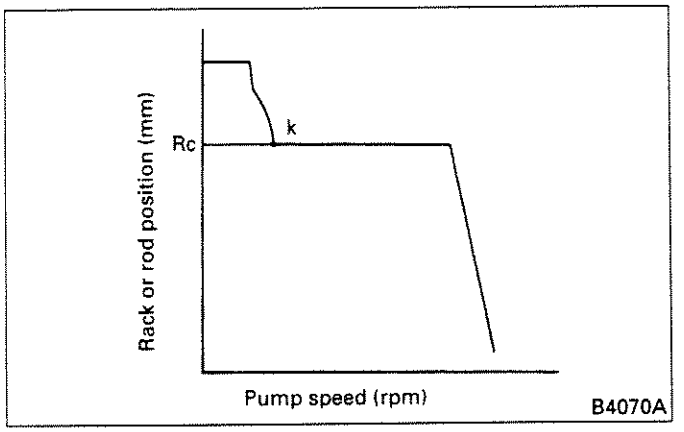

Adjust the idling spring so that the rack or rod starts to move from "Rc" to direction to increase fuel rate at point k.

(7) Adjustment of low speed control

(a) Adjustment of stopper bolt

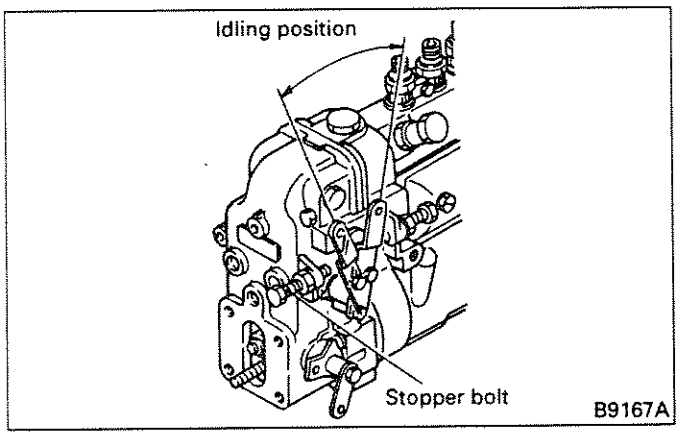

Adjust the stopper bolt so that the rack or rod is positioned at "Rg" when the adjusting lever is set at idling position with the pump stationary.

(b) Adjustment of idling sub spring

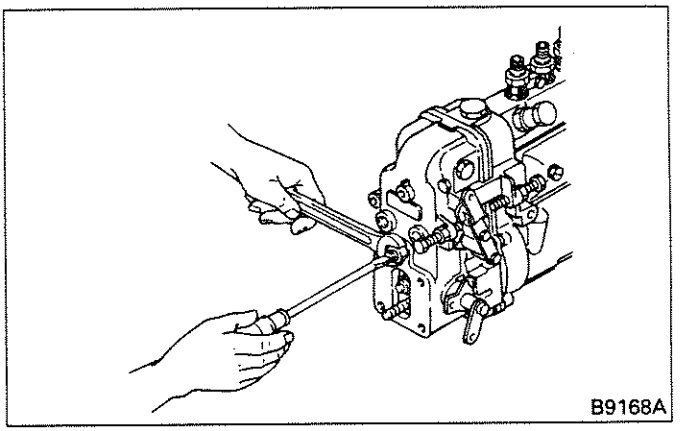

Adjust the idling sub spring so that the rack or rod is positioned at "Ri" when the pump speed is "Ni". Check that the rack is positioned at "Rh" when the pump speed is further increased.

(8) Adjustment of high speed control

Adjust as in Item (3) and fix the maximum speed stopper bolt in position.

(9) Adjustment of speed regulation

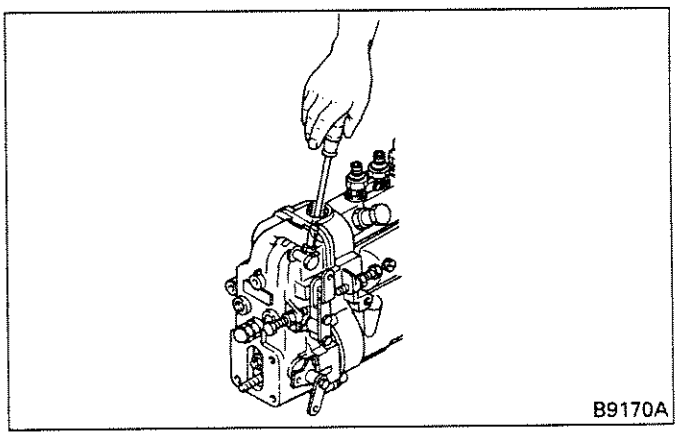

Check that the rack or rod is pulled back to position "Re" when the pump speed is increased from "Nd" to "Ne".

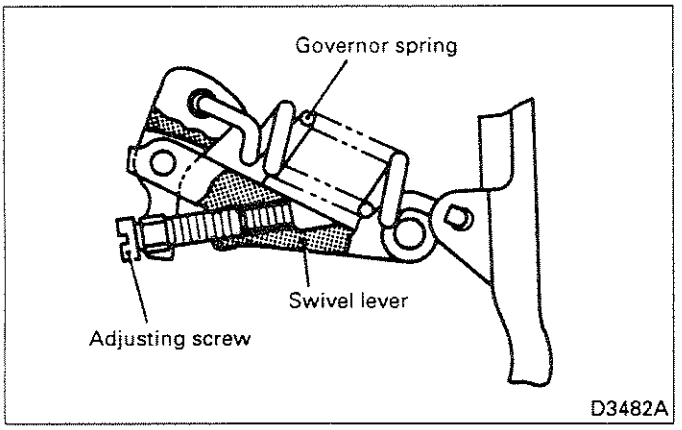

If the pump fails to do so, adjust tightening amount of the swivel lever adjusting screw.

Tightening gives better speed regulation.
Loosening gives poorer speed regulation.

$$\text{Speed regulation} = \frac{Ne - Nd}{Nd} \times 100\ (\%)$$

NOTE:

1. **If the speed regulation is poor, the engine will exceed the specified maximum speed at no load and will enter a hazardous condition.**
2. **The maximum extent to which the adjusting screw can be loosened is 20 notches (5 turns) from the fully tightened position. Loosening it any further can be dangerous.**
3. **If the adjusting screw is adjusted, the tension of the governor spring will change and the high speed control start point will change. Be sure to readjust the high speed control in accordance with Item (8).**

(10) Stop lever operation check

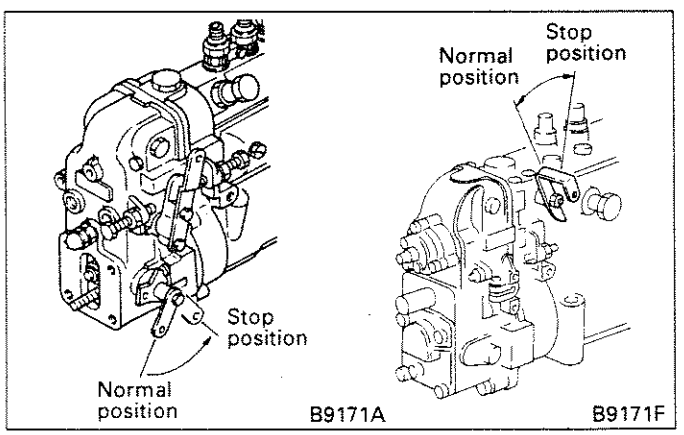

With the adjusting lever fixed at the full position, pull the stop lever all the way to the stop side and check that the rack is positioned at 0 mm.

(11) Adjustment of full-load

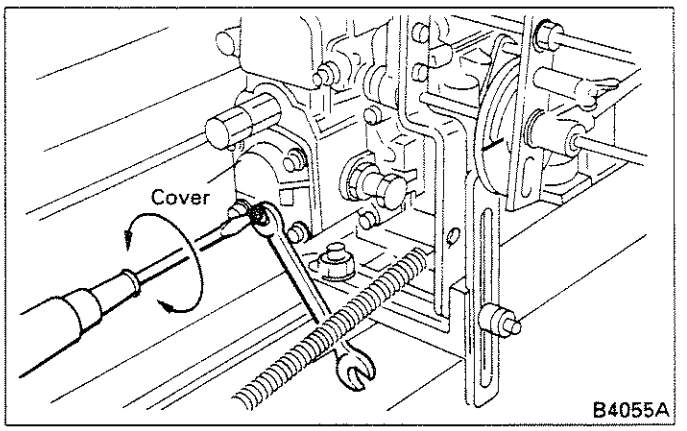

(a) Install the lever to the governor cover.
(b) With the adjusting lever at the full position, adjust the full-load stopper bolt so that the rack or rod is positioned at "Rc".

(12) Adjustment of torque spring

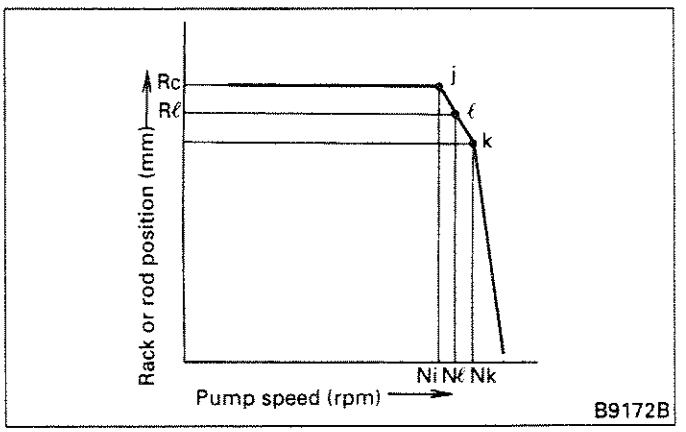

(a) Fix the adjusting lever at the full position and set the pump speed at "Nk".
(b) Screw in until the torque spring contacts the lever and fix temporarily.
(c) Adjust the torque spring so that the rack or rod is positioned at "Rℓ" when the pump speed is lowered to "Nℓ".
(d) Check that the pump speed is "Nj" when the pump speed is lowered to position the rack or rod at "Rc".
(e) After the adjustment, check that the rack position is as specified at each pump speed.
If the rack position is out of specification, readjust the torque spring and full-load stopper bolt.

(13) Boost compensator adjustment

(a) Adjusting boost compensator stroke

1) Remove the cap nut and loosen the lock nut.

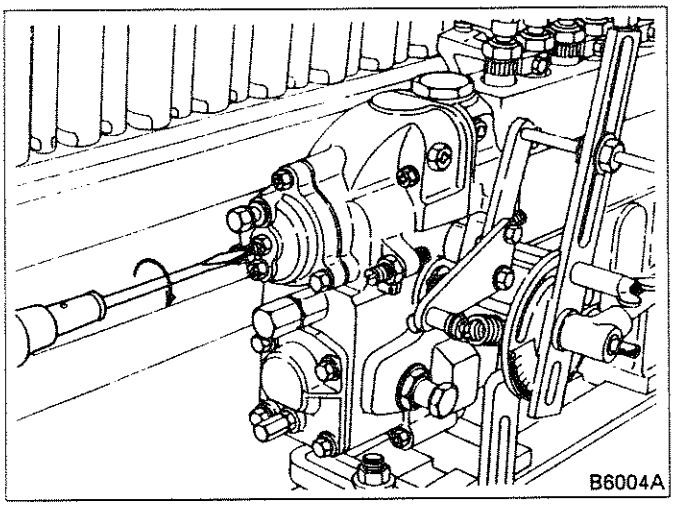

2) Fully tighten the adjusting screw and secure it with the lock nut.
3) Attach the air pipe.
4) Set the control lever in its FULL position.

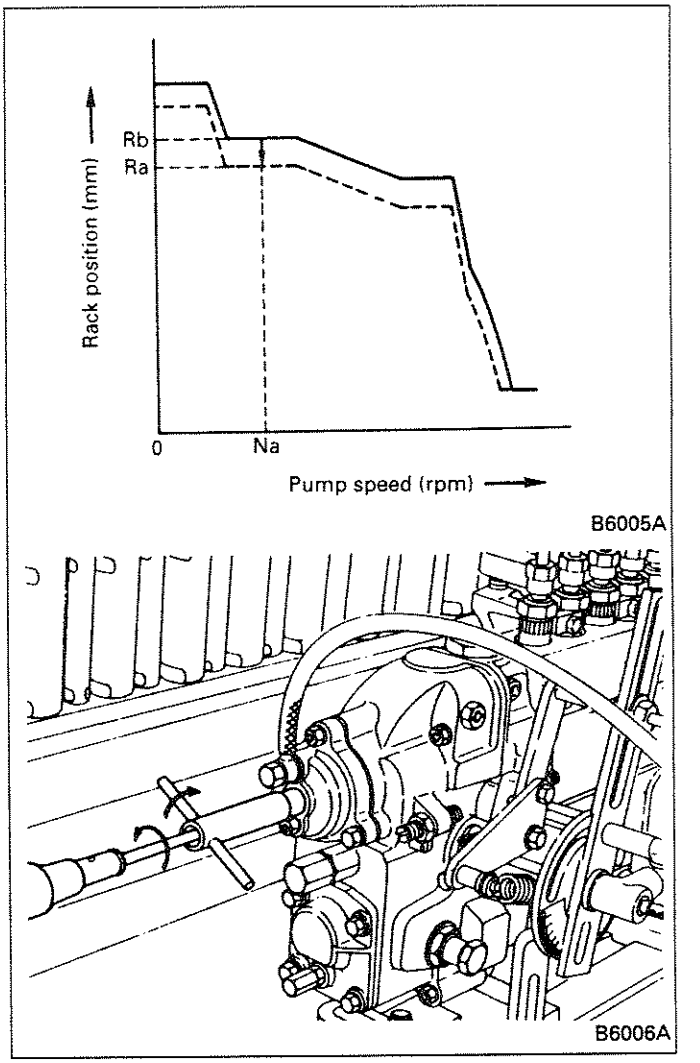

5) Maintaining the pump speed indicated by "Na," turn the adjusting screw such that the control rack moves from the "Rb" position to the "Ra" position. Secure the adjusting screw with the lock nut.

NOTE:
Do not apply pressure during this adjustment.

(b) Adjusting boost pressure

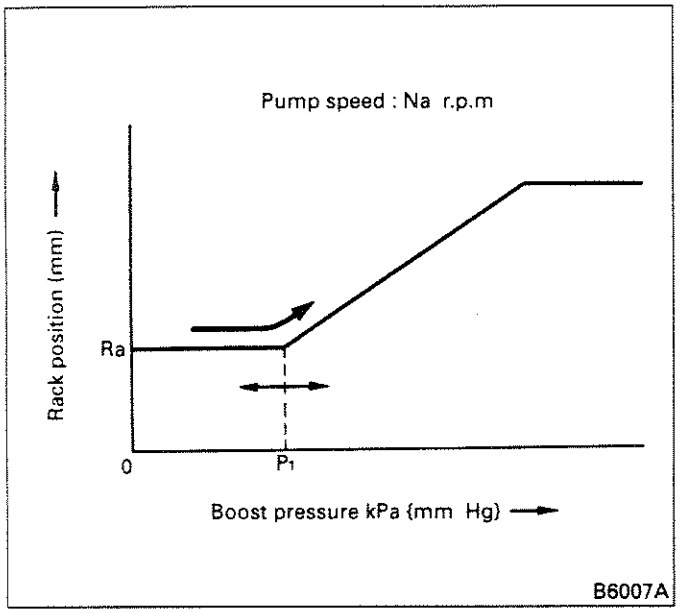

1) Maintaining the pump speed indicated by "Na," move the control lever to its FULL position.
2) Gradually raise the boost pressure. When it reaches the pressure indicated by "P_1", check that the control rack begins to move in the direction of increase relative to the position indicated by "Ra." If measurements are out of specification, change the adjustment shim in accordance with the following procedure.
3) Loosen the three bolts that retain the cover, then remove the cover.

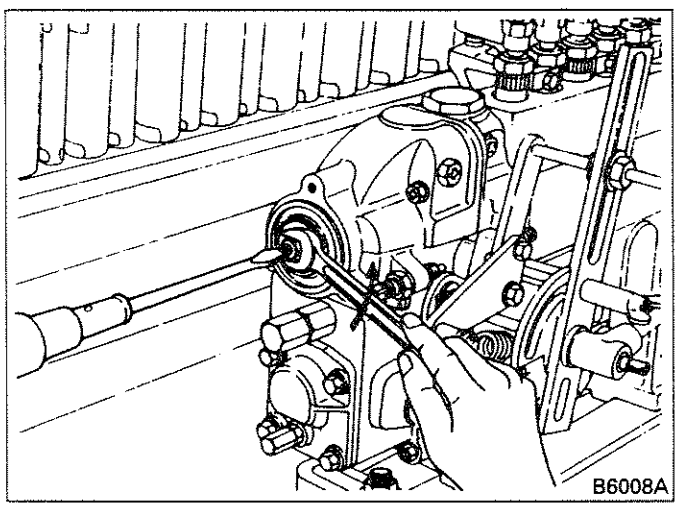

4) Using a screwdriver and spanner [ADDED], remove the nut that prevents the push rod from turning.

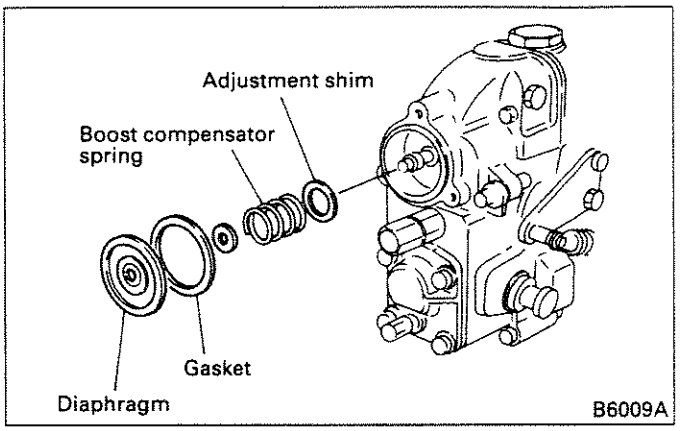

5) Remove the components labeled in the above illustration, then change the adjustment shim.
If boost pressure P_1 is too low, fit a thicker shim. If boost pressure P_1 is too high, fit a thinner shim.

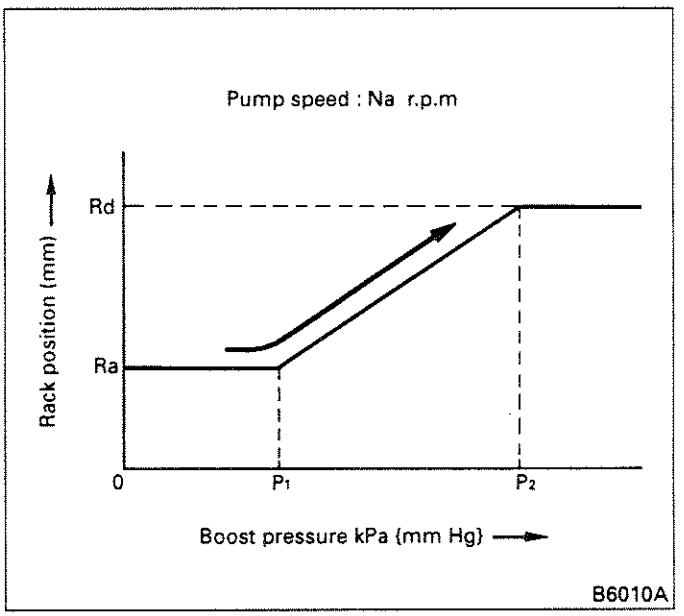

6) After adjusting the boost pressure, raise it further. When it reaches the pressure indicated by "P_2," check that the control rack is in its "Rb" position. If measurements are out of specification, fit a new boost compensator spring.

NOTE:
The boost compensator stroke may change when the cover is removed. Be sure to recheck the boost compensator stroke.

(14) Adjustment of adaptation to engine

After the governor has been adjusted, measure overall injection amount at the same lever angle as in the high speed control and in accordance with the adjustment standard and readjust as necessary.

(15) Locking with wire

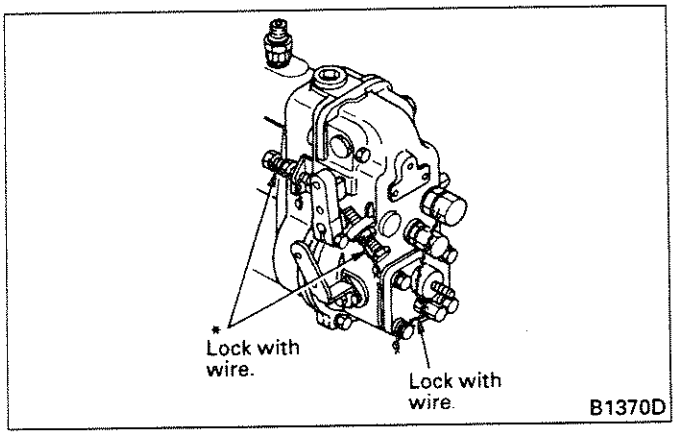

After adjustments, lock the governor with wires.

NOTE:

Locking of the sections marked with * must be done after adjustment of no-load minimum and maximum speeds.

5.5 RFD Type Governor

The following Zexel special tools should be used for governor maintenance:

Special tool name	Part No. (Zexel product No.)	Application
Handle	157910-1120	Removal and installation of lock nut
Socket wrench	157914-0500	
Wrench	157915-0100	Removal and installation of round nut
Extractor	157926-5110	Removal of flyweight
Special wrench	157916-2620	Adjustment of idle speed
Guide screw	157976-3100	Adjustment of rack limit

5.5.1 Disassembly, inspection and reassembly

NOTE:

1. **Do not remove the floating lever link and sleeve from the guide lever unless replacement is necessary.**
2. **Do not remove the swivel lever from the governor cover unless parts must be replaced or operation is not smooth.**
3. **Do not remove the governor housing unless there are oil leaks or parts must be replaced. If the governor housing must be removed, use the Tappet Insert (special tool) to sever the camshaft-to-tappet contact.**
4. **Do not remove the stop lever assembly from the top of the governor housing.**

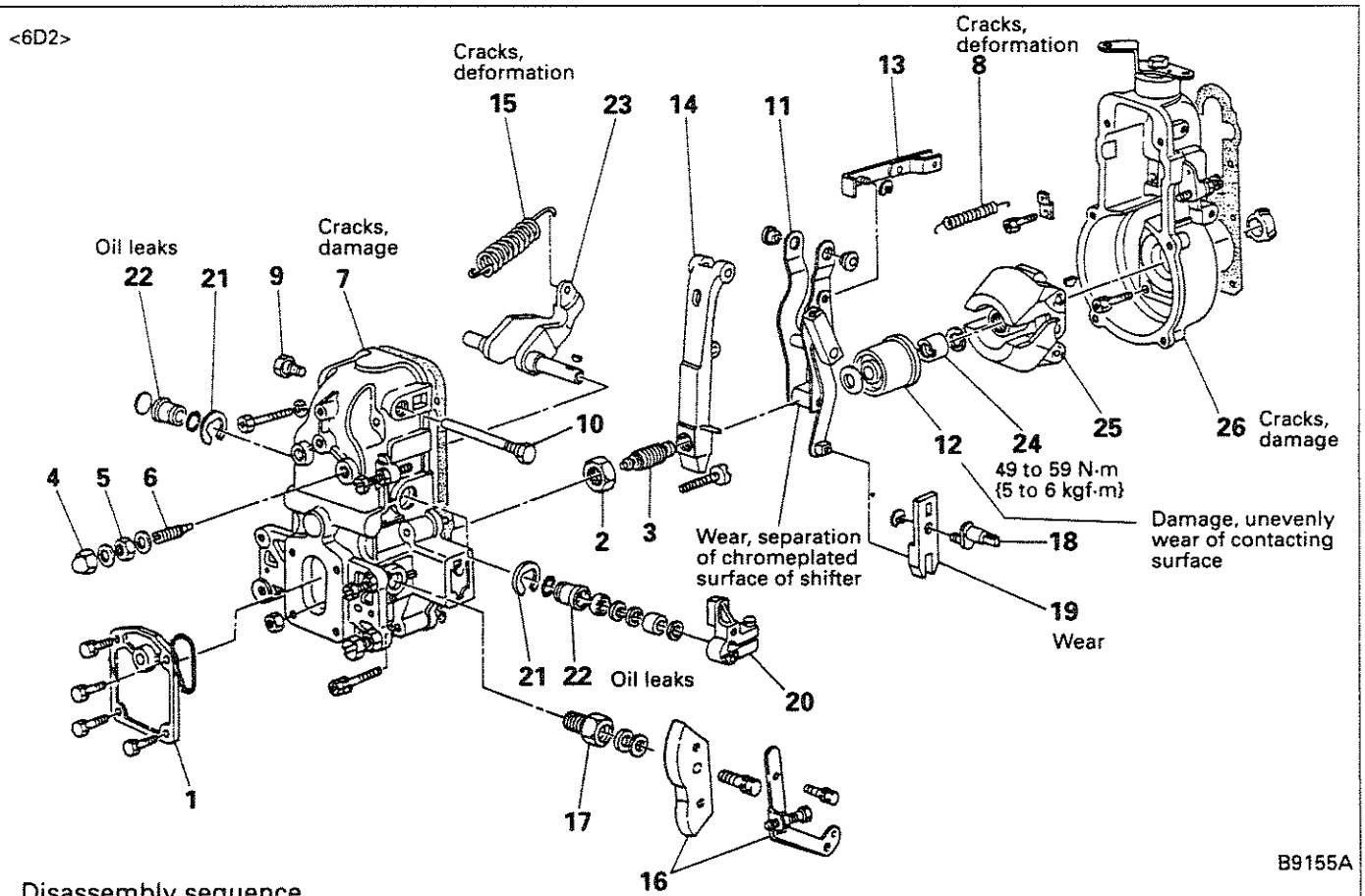

Disassembly sequence

1 Cover	9 Tension lever plug	18 Lever shaft
2 Lock nut	10 Tension lever shaft	19 Sliding lever
3 Idling spring assembly or Ungleich spring capsule	⑪ Guide lever assembly	20 Speed control lever
4 Cap nut	⑫ Sleeve	21 Snap ring
5 Lock nut	13 Floating lever link	22 Bushing
6 Damper spring capsule	14 Tension lever	23 Swivel lever
7 Governor cover	15 Governor spring	24 Round nut
8 Start spring	16 Load control lever	25 Flyweight
	17 Bushing	26 Governor housing

For parts with an encircled number, refer to Disassembly Procedure that follows.
For reassembly, reverse the order of disassembly.

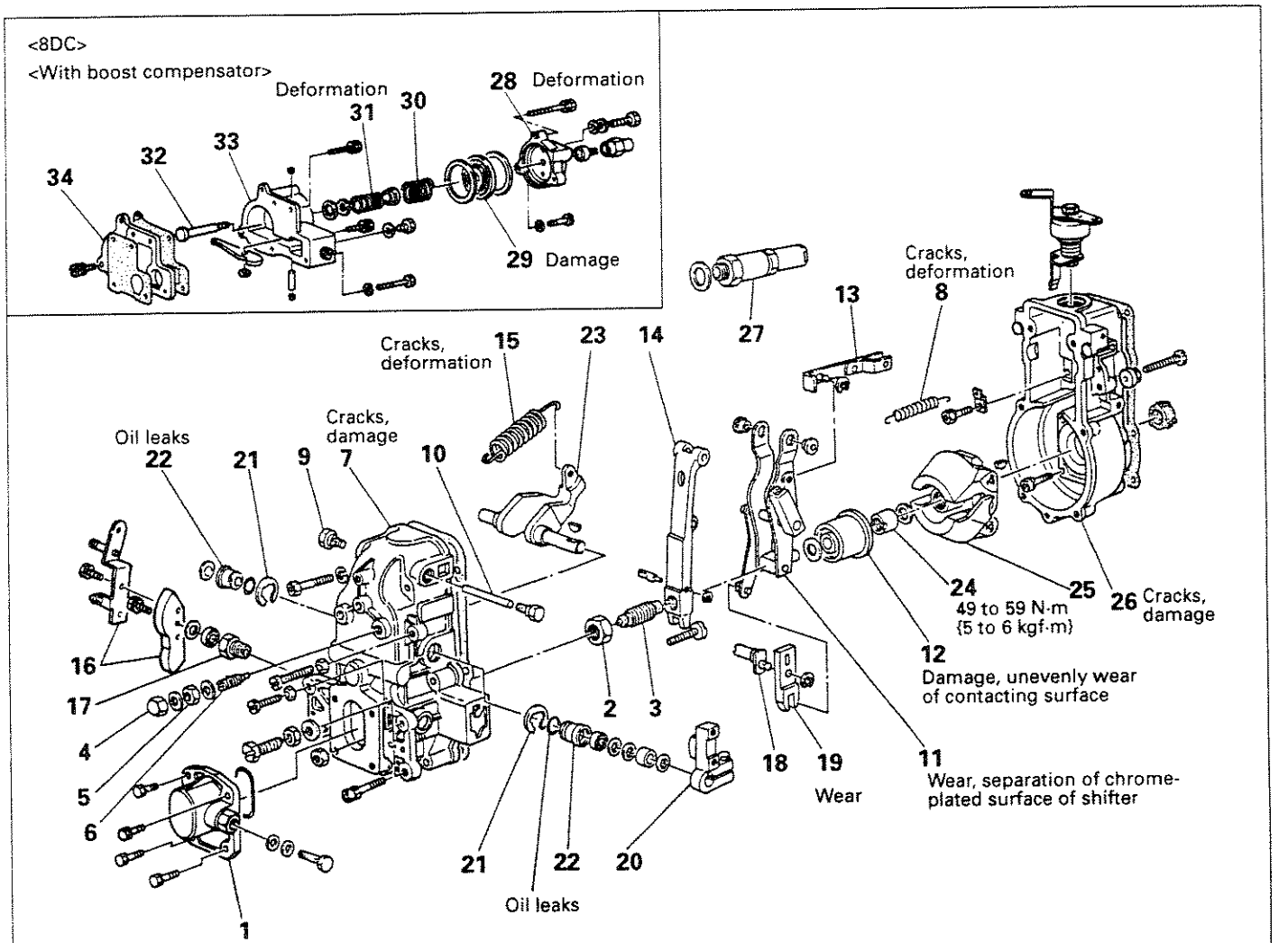

Disassembly sequence

1 Cover
2 Lock nut
3 Idling spring assembly or Ungleich spring capsule
4 Cap nut
5 Lock nut
6 Damper spring capsule
7 Governor cover
8 Start spring
9 Tension lever plug
10 Tension lever shaft
⑪ Guide lever assembly
⑫ Sleeve
13 Floating lever link
14 Tension lever
15 Governor spring
16 Load control lever
17 Bushing
18 Lever shaft
19 Sliding lever
20 Speed control lever
21 Snap ring
22 Bushing
23 Swivel lever
24 Round nut
25 Flyweight
26 Governor housing
27 Smoke limiter
28 Boost compensator cover
29 Diaphragm
30 Boost compensator spring
31 Start spring
32 Push rod
33 Boost compensator housing
34 Spacer

For parts with an encircled number, refer to Disassembly Procedure that follows.
For reassembly, reverse the order of disassembly.

D2041B

Assembly dimension of shifter

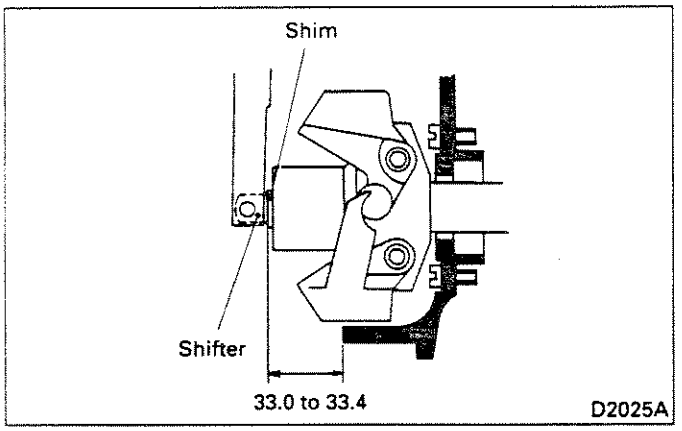

When the shifter and sleeve are assembled, be sure not to change the adjusting shim, as the assembly dimension of the shifter has been adjusted by the shim.
If readjustment is necessary, assemble all related parts correctly and select the right shim thickness to make sure that the dimension from the housing end to the shifter complies with the specified value.

Shim thickness (4 types): 0.2, 0.3, 0.4, 1.0

NOTE:
Measure the assembly dimension with all flyweight lifted.

5.5.2 Test and adjustment

For governor performance curve, see Service Information published separately.

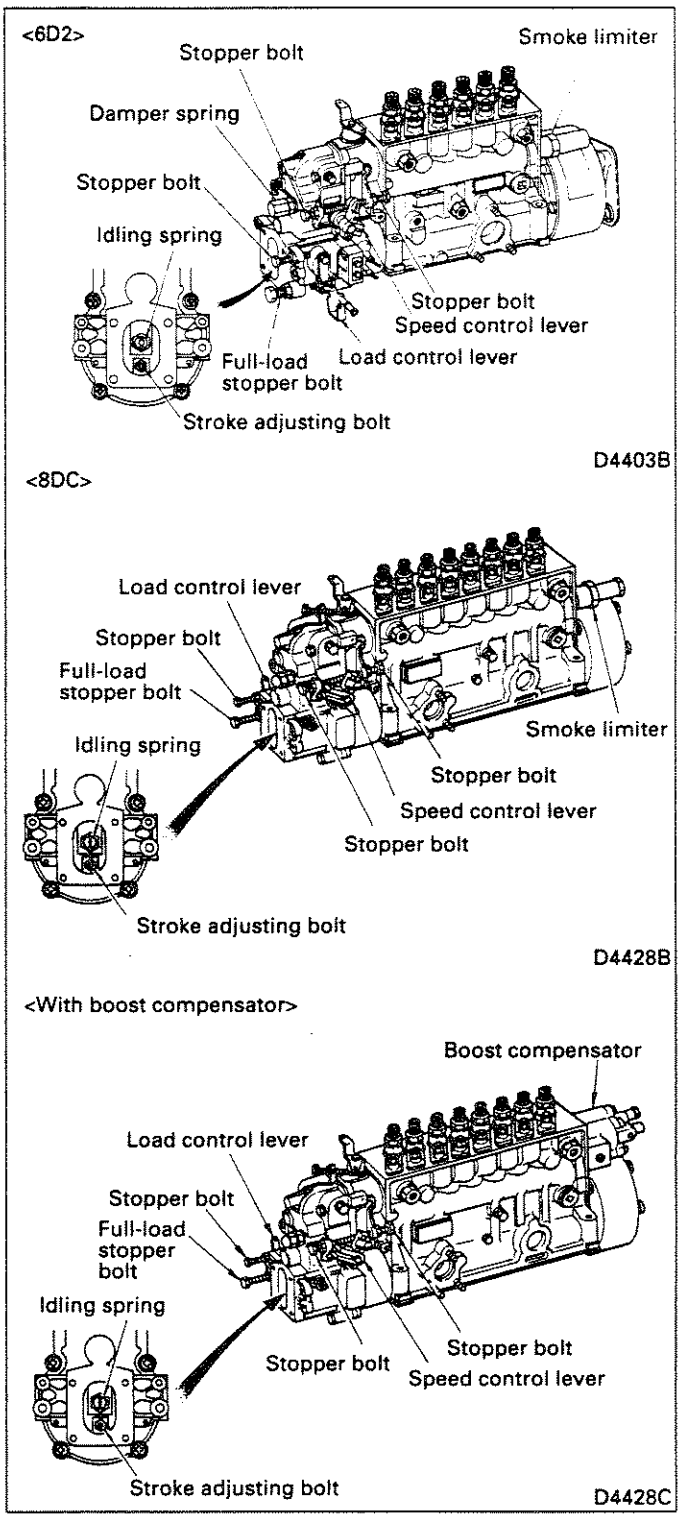

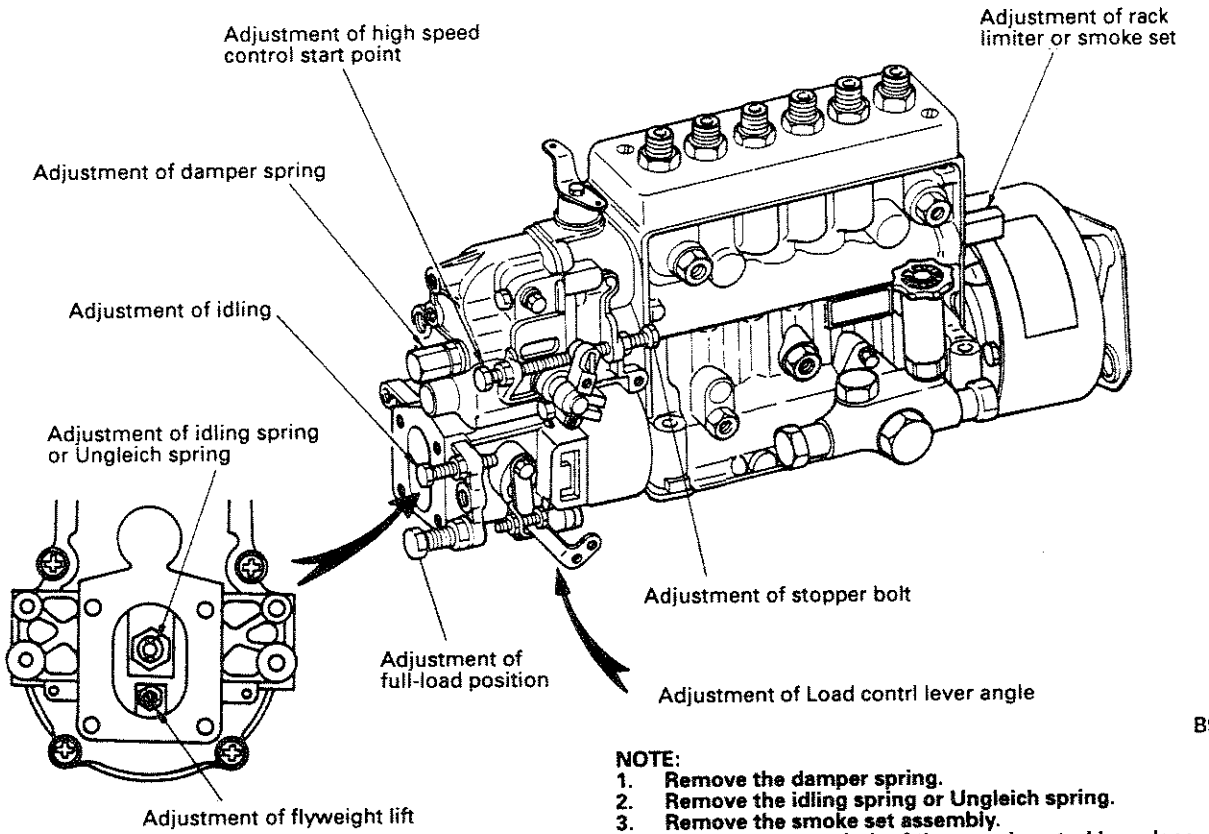

NOTE:
1. **Remove the damper spring.**
2. **Remove the idling spring or Ungleich spring.**
3. **Remove the smoke set assembly.**
4. **Keep the stopper bolt of the speed control lever loosened.**
5. **Keep the stopper bolt of the load control lever loosened.**

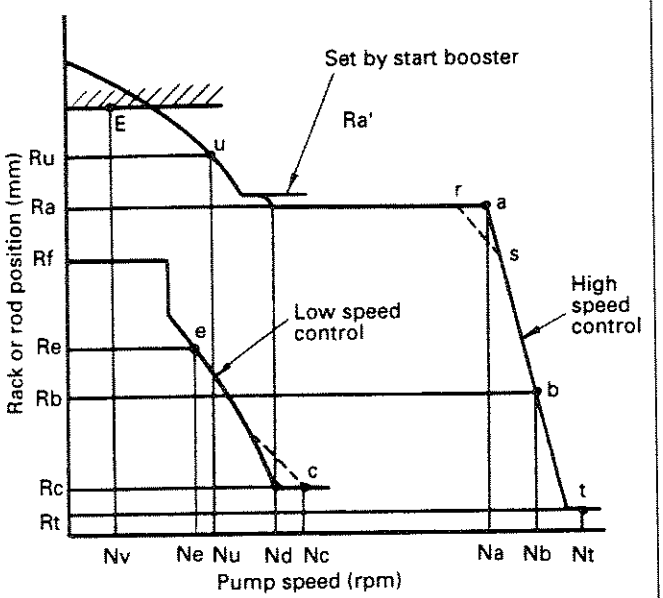

Adjust the relationship between pump speed and the rack or rod position to specified governor performance curve by the following procedure.

(1) "0" position setting of control rack <AD type pump>
[Refer to Section 5.2.2 (2).]
"0" position setting of control rod <P type pump>
[Refer to Section 5.3.2 (2).]

(2) Install the angle scale plate for fixing the control lever.

(3) Adjustment of flyweight lift and full-load position

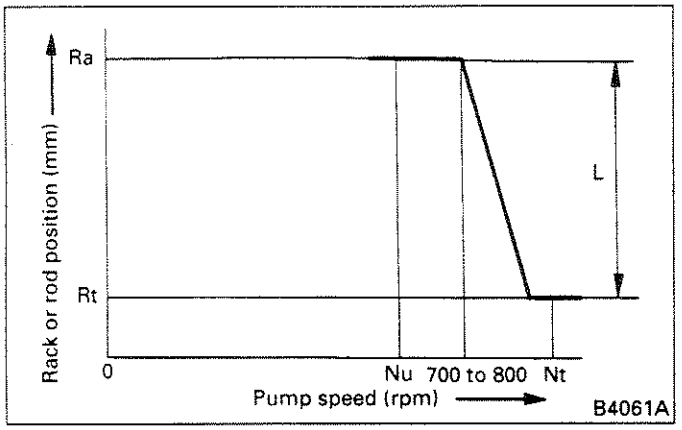

Divide the flyweight full lift into the lift necessary for high speed control and the lift necessary for idling control.

(a) With the load control lever fixed at the full-load position, temporarily set the speed control lever so that high speed control works when the pump speed is 700 to 800 rpm.

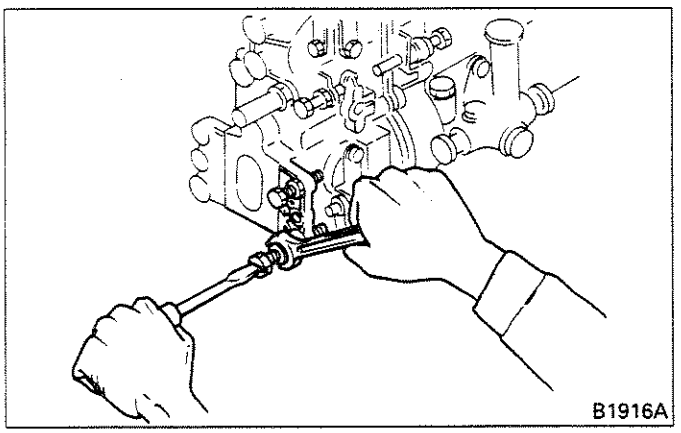

(b) Increase the pump speed slowly and adjust the full-load stopper bolt so that the rack is positioned at "Rt" when the pump speed reaches "Nt".

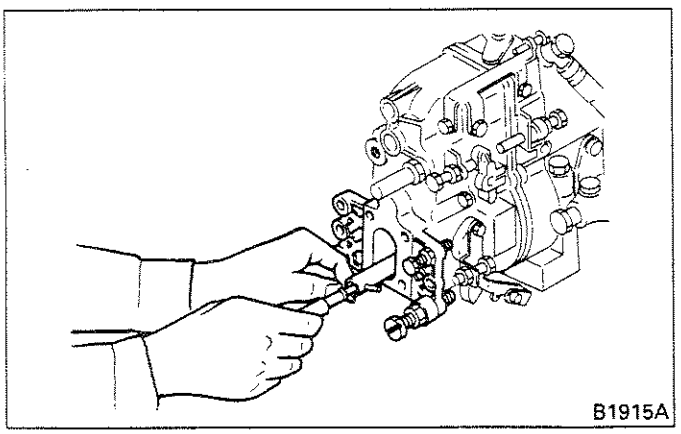

(c) Lower the pump speed to "Nu" and adjust the high speed lift "L" with the stroke adjusting screw.

(4) Adjustment of high speed control

(a) Adjustment of high speed control start point

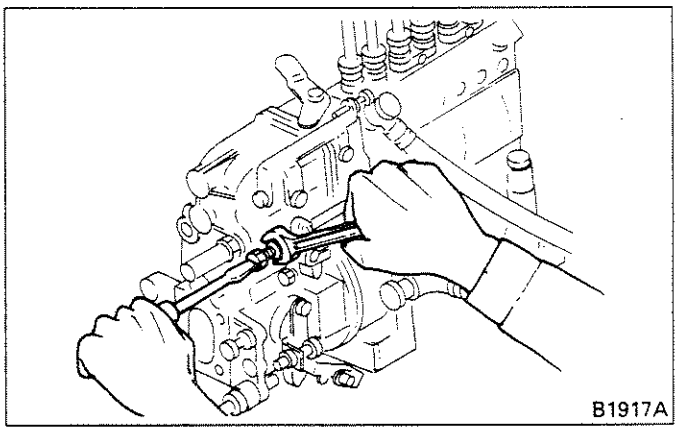

Set the control lever at the full-load position and set the speed control lever at the maximum speed position. Increase the pump speed slowly and adjust the speed control lever stopper bolt so that the rack starts to move from "Ra" toward fuel decreasing direction when the pump speed reaches "Na".

(b) Check of speed regulation

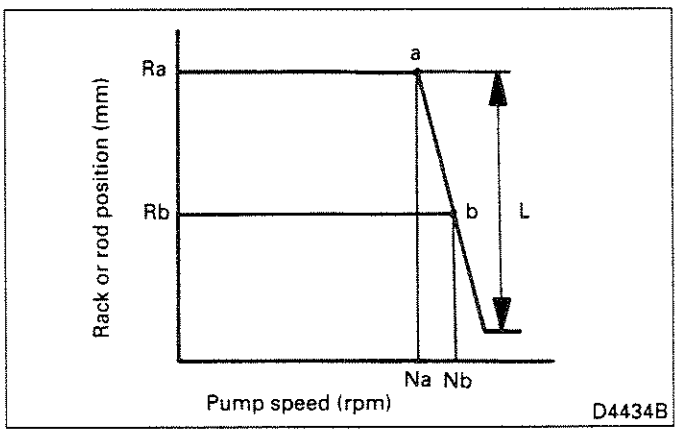

Increase the pump speed slowly until the control rack or rod is pulled back to "Rb" position.
Upon reaching "Rb" position, check that the pump speed is "Nb".
Further increase the pump speed and check that the rack or rod pull back amount "L" is as specified.

NOTE:

1. **If the speed regulation check point (point b) is where the damper spring acts, check the speed regulation after idling and damper spring adjustment.**
2. **If the value is out of specification, replace the governor spring.**

(5) Adjustment of idling spring
(governor with idling spring only)

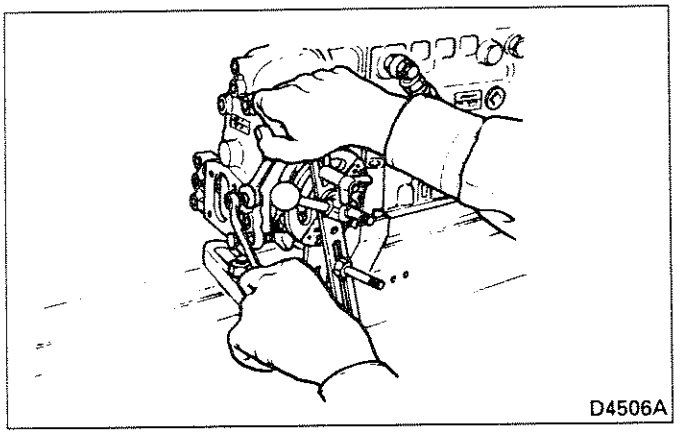

(a) Set the pump speed at "Nc" and adjust the stopper bolt so that the rack or rod is positioned at "Rc".

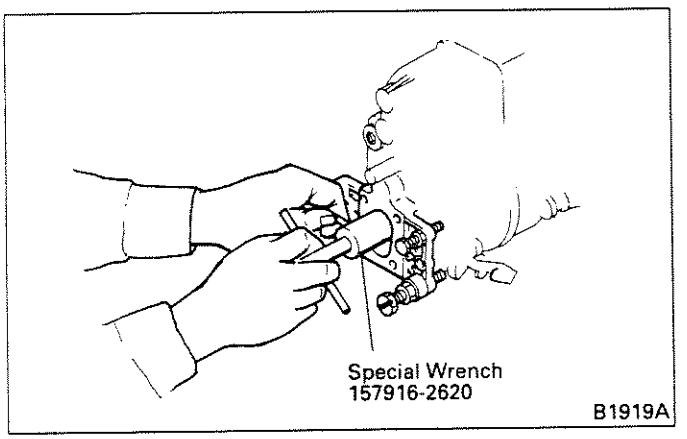

(b) Lower the pump speed to "Ne" and adjust the idling spring using Special Wrench (special tool) so that the rack is positioned at "Re".

(c) When the pump is stopped the rack should be at "Rf" or higher position. Also check that the rack is positioned at "Rc" when the pump speed is increased to "Nd".

(6) Adjustment of Ungleich spring
(Vehicles with Ungleich spring only)

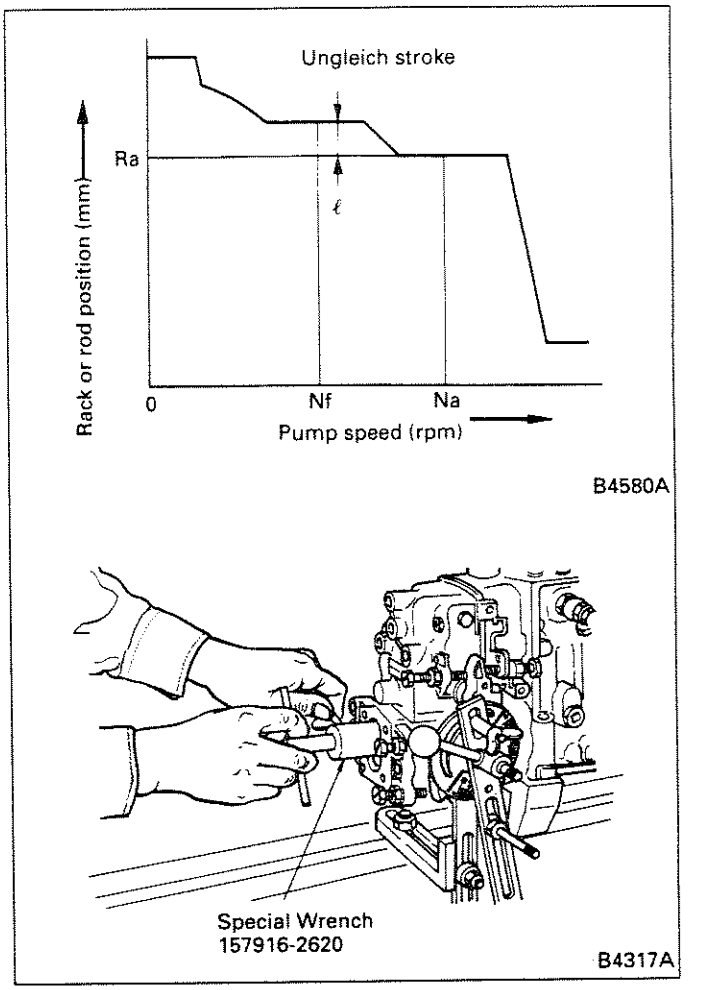

(a) Set the pump speed at "Nf" and place the load control lever in the full-load position.

(b) Using Special Wrench (special tool), adjust the Ungleich spring position so that the Ungleich stroke ℓ in the state of Step (a) will have the specified value. After the adjustment, firmly tighten it with the lock nut.

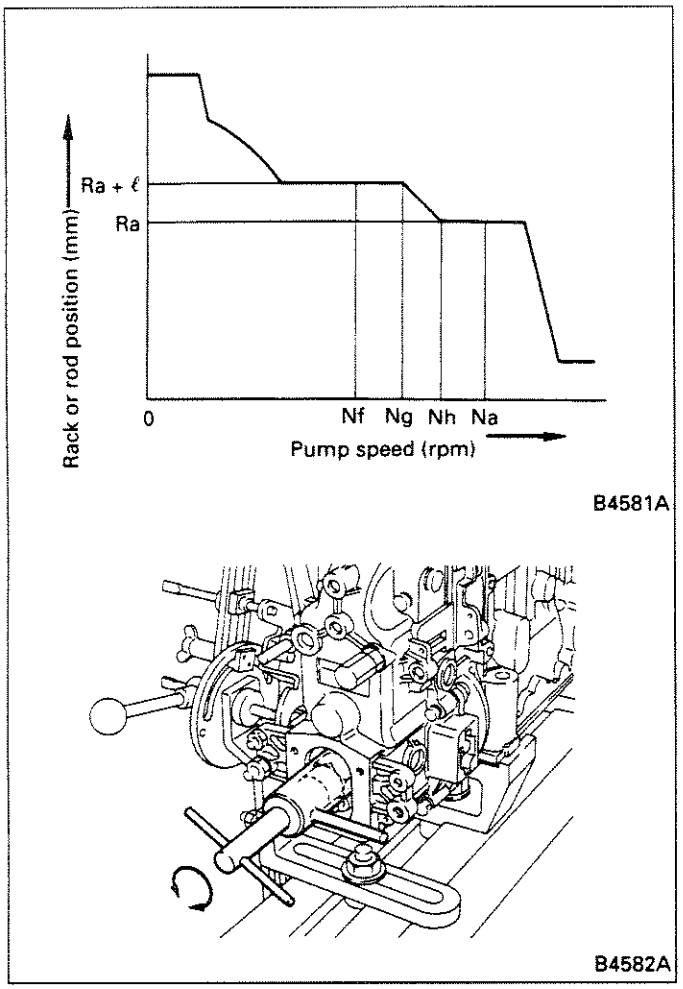

(c) Slowly increase the pump speed from "Nf" to "Ng" and adjust the screw position so that the Ungleich spring will start working.

(d) Increase the pump speed to check that the Ungleich spring stops working at "Nh".

(e) Change the pump speed between "Nf" and "Na" to check that the Ungleich stroke has the specified values.

NOTE:

1. **If the Ungleich stroke is out of specification, readjust the Ungleich spring position.**
2. **If the speed at which the Ungleich spring stops working is out of specification, replace the Ungleich spring.**

(7) Measurement of load control lever angle

Check that when the load control lever is held at the idling position and the full-load position, the lever angle at the respective positions is up to specification.

If the lever angle is out of specification, replace the shim installed between the shifter and sleeve.

NOTE:

If the shim was replaced, repeat adjustment of the governor from the beginning.

(8) Adjustment of damper spring

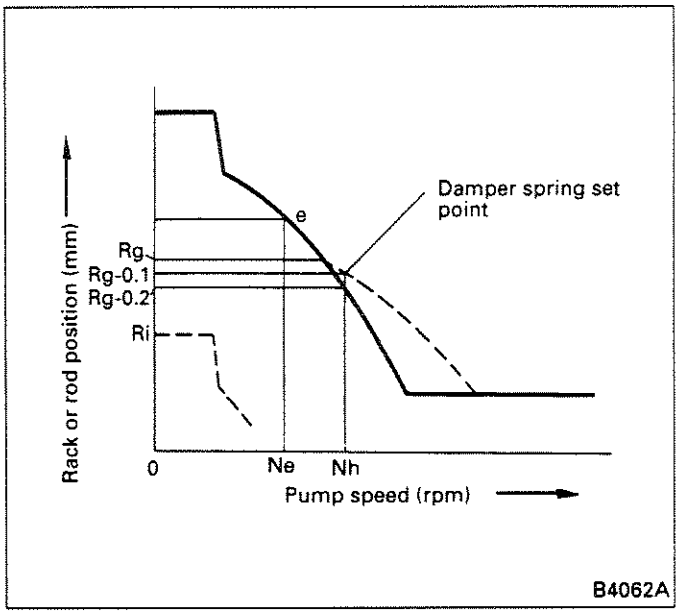

(a) Holding the load control lever at the idle position (point e) and slowly increase the pump speed from "Ne" until the rack or rod is positioned at "Rg – 0.2 mm". Hold the pump speed "Nh" when the rack or rod is so positioned.

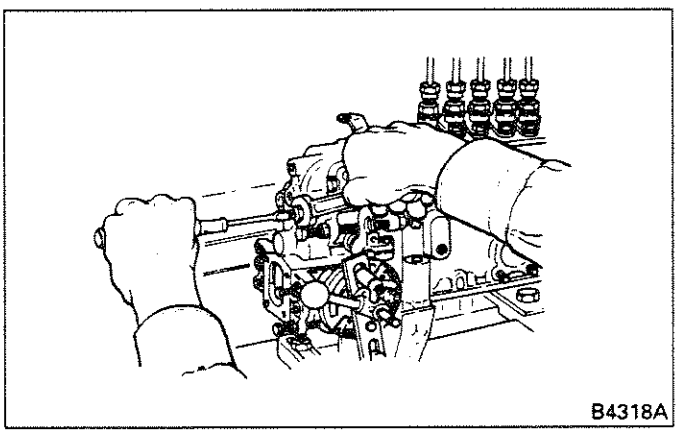

(b) Adjust the damper spring tightening amount so that the rack or rod is positioned at "Rg – 0.1 mm".

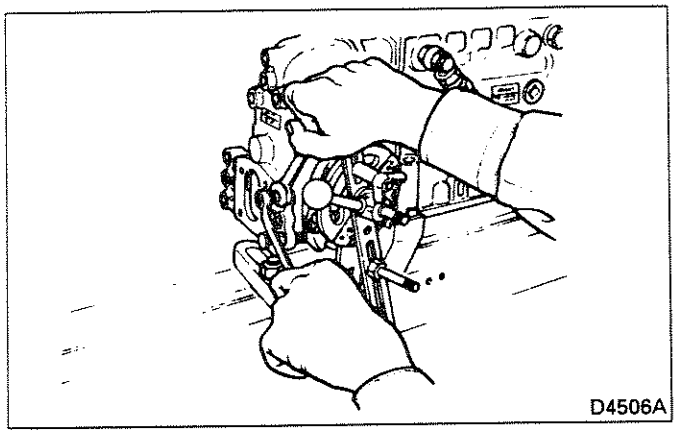

(c) After adjustment, stop the pump and loosen and adjust the stopper bolt so that the rack or rod is positioned at "Ri".

(9) Adjustment of rack limit

(a) Rack cap type

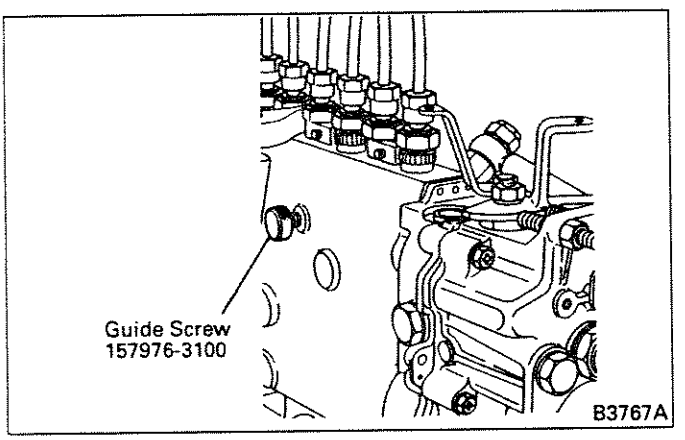

1) Remove the guide screw from the back of the pump housing and install Guide Screw (special tool).

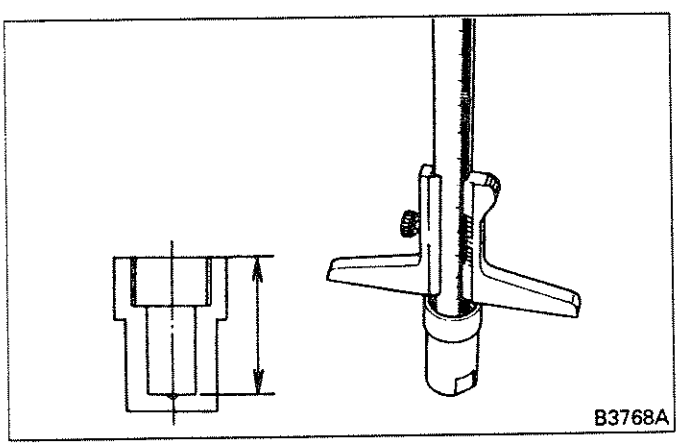

2) Using a depth gauge, measure the rack cap depth.

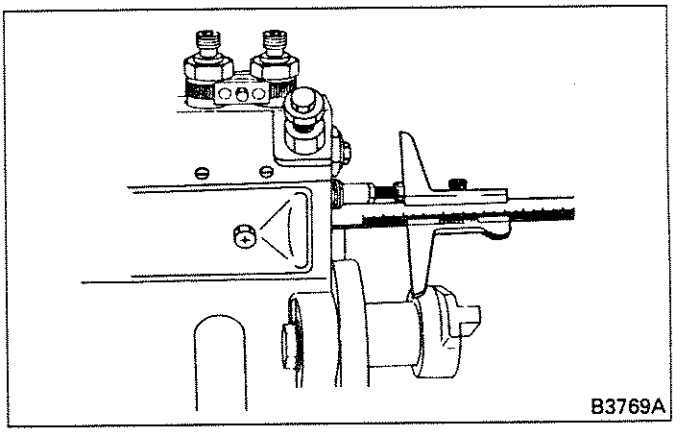

3) Adjust the adjusting nut mounted to the tip of the rack for the same depth as the rack cap depth measured above. Fix the nut in position with the lock nut.
After adjustment, install the cap nut securely.

(b) Screw type

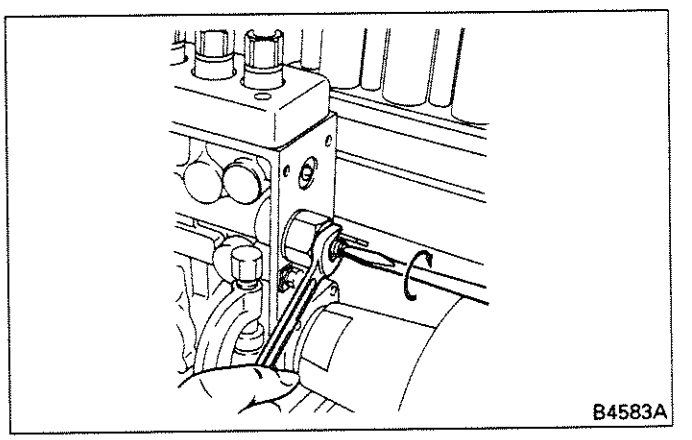

1) Place the load control lever in the full-load position and keep the pump speed at "Nv".
2) Adjust the screw of the rack limiter so that the rod position and fuel injection (point E) will be up to specification, and secure it with the lock nut.

(10) Adjustment of start booster (smoke set assembly)

<6D2>

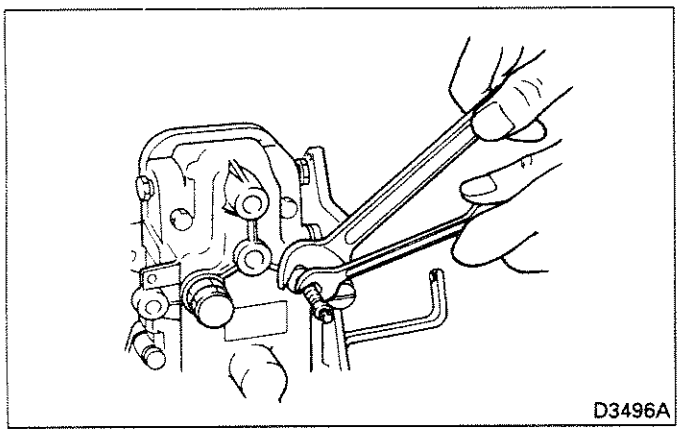

(a) Move the load control lever to the full-load position and set the smoke set assembly's adjusting nut 0 to 4 mm from the end of the stopper.

(b) When adjusting the pump speed to "Nd," adjust it such that the rack and rod positions are from "Ra" to "Ra.' "

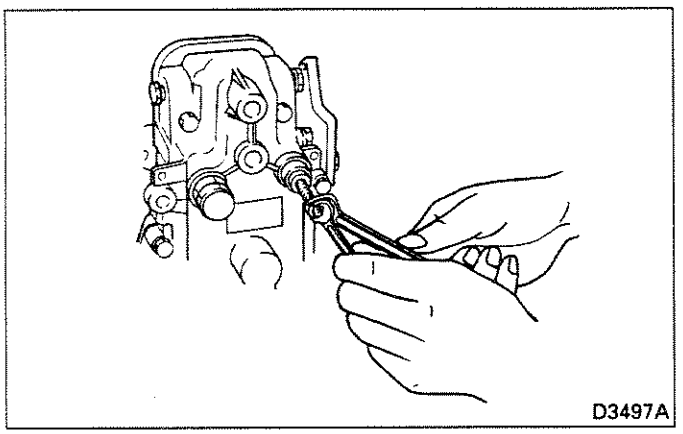

(c) When adjusting the pump speed to "Nu," tighten the nut such that the rack and rod positions are fixed at "Ru."

<8DC>

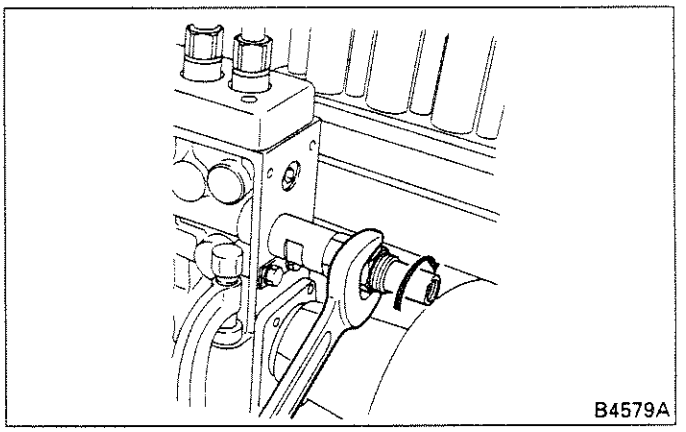

(a) Place the load control lever in the full-load position.

(b) Turn down the screw on the smoke set assembly so that the specified fuel injection rate is obtained when the pump speed is at "Nu". Then, secure the screw with the lock nut.

(11) Adjustment of boost compensator <8DC9-T, TL>

(a) Install the boost compensator and connect air pipe to the boost pressure test port.

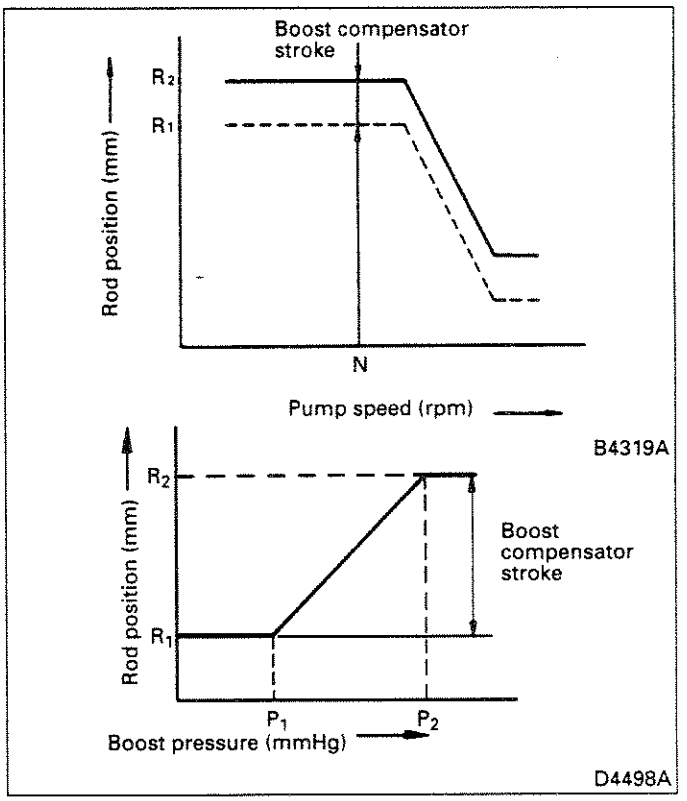

(b) Drive the pump at the specified adjustment speed "N" and place the load control lever into the full-load position.

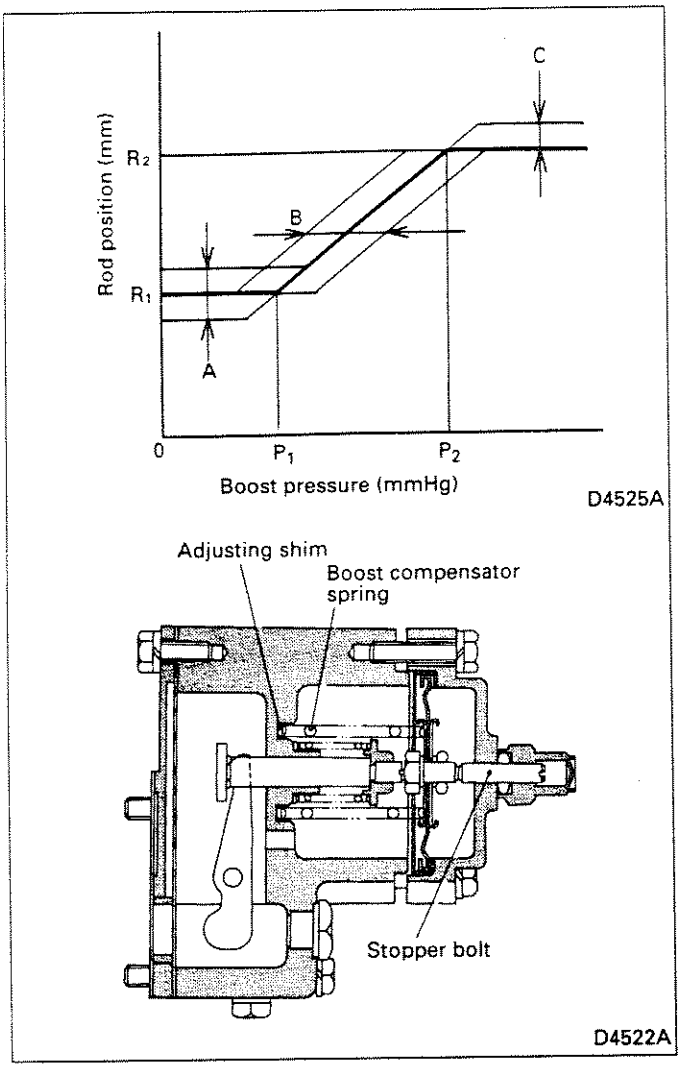

(c) Turn the stopper bolt as required so that the control rod is positioned at "R_1" with a zero boost pressure (adjustment A).

(d) Gradually increase the boost pressure. Select shim so that the control rod movement starts at pressure "P_1" (adjustment B).

(e) Further increase the boost pressure. Adjust the full-load position of the load control lever so that the movement of control rod stops at "R_2" even when the boost pressure exceeds "P_2" (adjustment C).

Shim thickness: 0.2, 0.5

NOTE:

1. **Adjustments A and C, when made, cause the set tension of the boost compensator spring to change, meaning that "P_1" also changes.**
2. **This performance should not be deviated even after the final adjustment for fuel injection rate.**

(12) Adaptation to engine

After the governor has been adjusted, measure and adjust the total fuel injection rate with the same lever angle as in high speed control according to the adjustment specifications.

(13)After the injection pump governor has been adjusted, seal the pump.

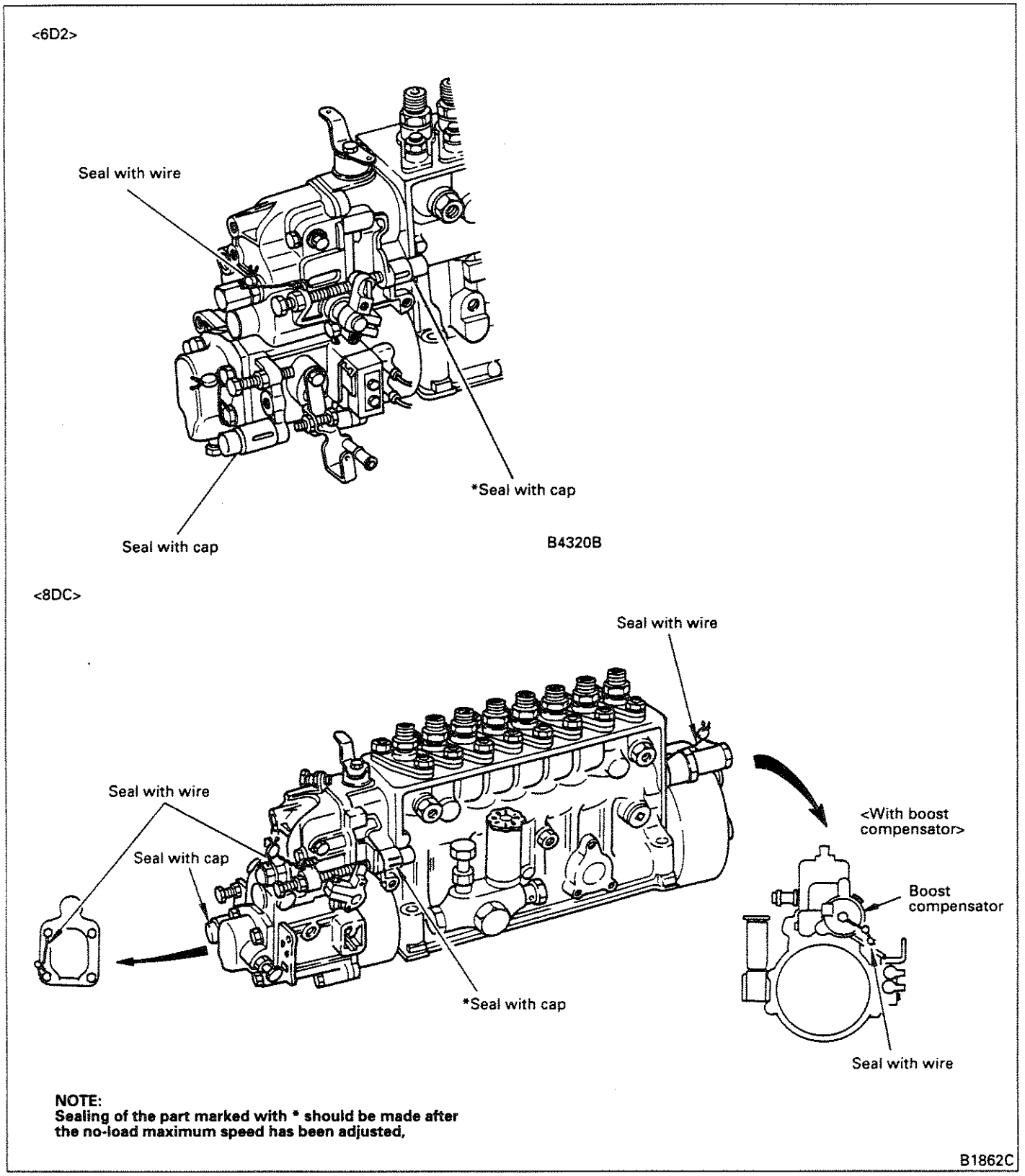

5.6 Feed Pump

5.6.1 Disassembly, inspection and reassembly

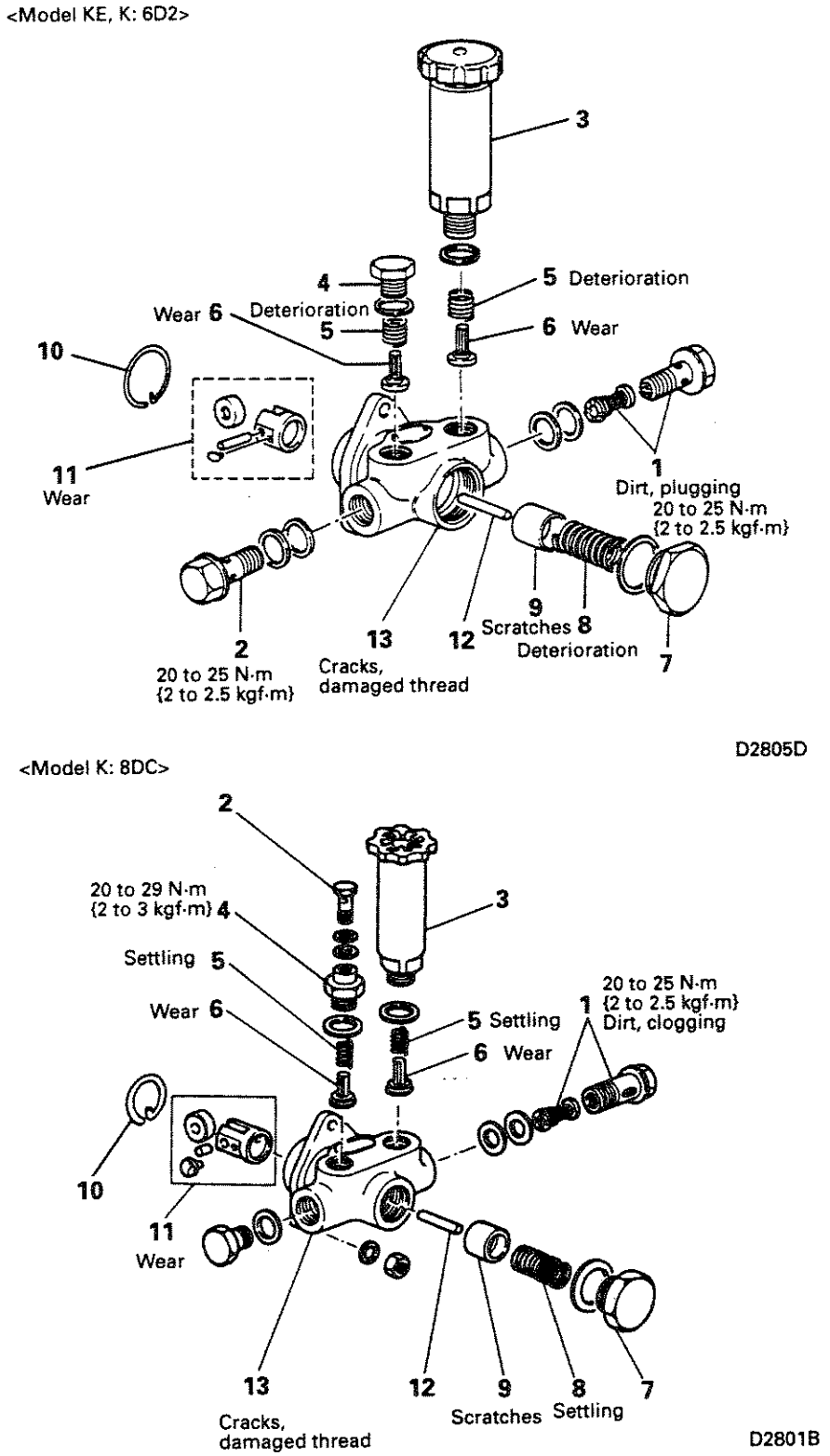

1 Eyebolt (suction side : with gauze filter)
2 Eyebolt (discharge side)
3 Priming pump
4 Check valve plug <model KE, K: 6D2> Adaptor <model K: 8DC>
5 Check valve spring
6 Check valve
7 Plug
8 Piston spring
9 Piston
10 Snap ring
11 Tappet
12 Push rod
13 Feed pump housing

NOTE:
Before starting the disassembly procedure, isolate and know the faulty spots.

<Model KD>
<6D2>

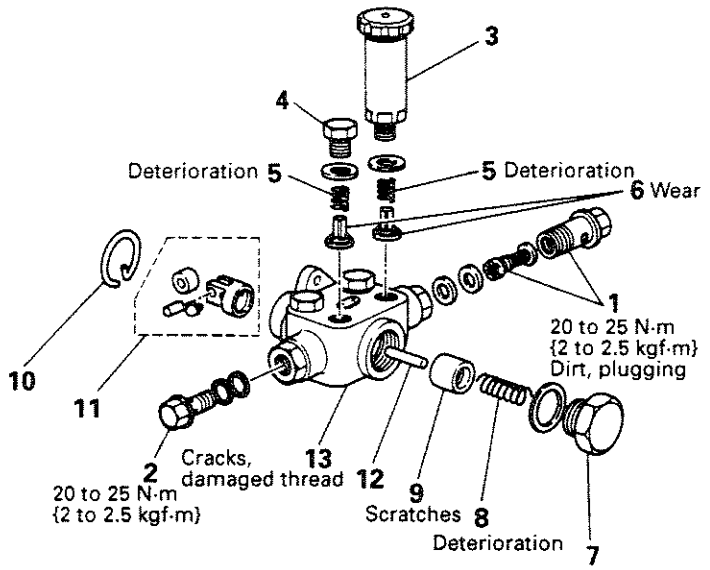

D2807B

<8DC>

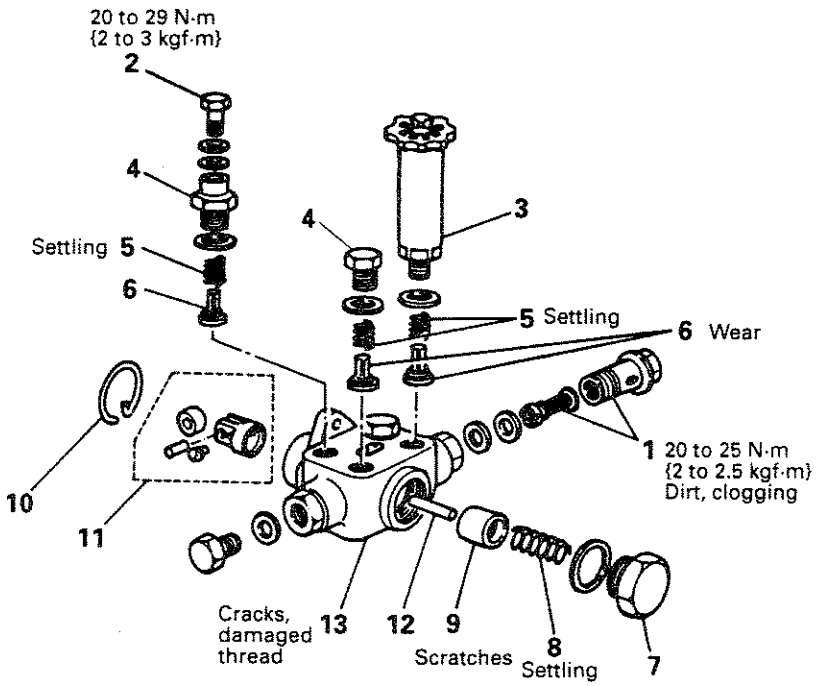

D2807C

1 Eyebolt (suction side : with gauze filter)
2 Eyebolt (discharge side)
3 Priming pump
4 Check valve plug <6D2> Adaptor <8DC>
5 Check valve spring
6 Check valve
7 Plug
8 Piston spring
9 Piston
10 Snap ring
11 Tappet
12 Push rod
13 Feed pump housing

NOTE:
Before starting the disassembly procedure, isolate and know the faulty spots.

5.6.2 Tests

The feed pump must be tested on the following items.

Unit: mm

Test item	Nominal value	Remarks
Air-tightness test	0 cm^3/min.	When a 195 kPa {2 kgf/cm^2} air pressure is applied.
Delivery test (minimum)	Refer to Section 3.1 Service Standards Table.	Delivery for 15 seconds Test conditions Fuel pipe: O.D. 10, I.D. 8, length 2000 Cam lift: 4 (double cam): Models K and KD 6 (eccentric cam): Model KE
Lift capacity test	25 strokes or less	No. of strokes required before pulling up fuel when priming pump is operated at 60 to 100 strokes/min. (lift 1 meter) Test conditions Same as the delivery test.

Delivery (min., for 15 seconds)

			Nominal value				Nominal value
100 rpm	KE type		60 cc	1000 rpm	KE type		405 cc
	K type	6D2	60 cc		K type	6D2	530 cc
		8DC	70 cc			8DC	600 cc
	KD type	6D2	130 cc		KD type	6D2	1170 cc
		8DC	145 cc			8DC	1170 cc
500 rpm	KE type		340 cc	1500 rpm	KE type		430 cc
	K type	6D2	260 cc		K type	6D2	520 cc
		8DC	300 cc			8DC	580 cc
	KD type	6D2	700 cc		KD type	6D2	1000 cc
		8DC	710 cc			8DC	1035 cc

5.7 SA Type Automatic Timer

The following Zexel special tools should be used for SA type automatic timer maintenance:

Special tool name	Part No. (Zexel product No.)	Application
SA type automatic timer special tool set (includes items marked with "*")	105790-5010	Disassembly and reassembly
Special spanner	157916-5320	Removal and installation of round nut
Extractor	157926-6210	Removal of timer
Flange insert	*157924-0120	Removal and installation
Hand spanner	*157916-6120	Removal and installation of timer case
Thrust bushing	157924-1500	Installation of oil seal
Guide bushing	157924-1200	
Block	157924-0800	
Guide bushing	157924-1300	
Guide	157924-0900	
Support	*157932-0100	Installation of flyweight
Guide	157924-0400	
Thrust bushing	157924-0500	Installation of flange
Oil seal guide	*157924-0600	Insert of timer case

5.7.1 Removal and inspection

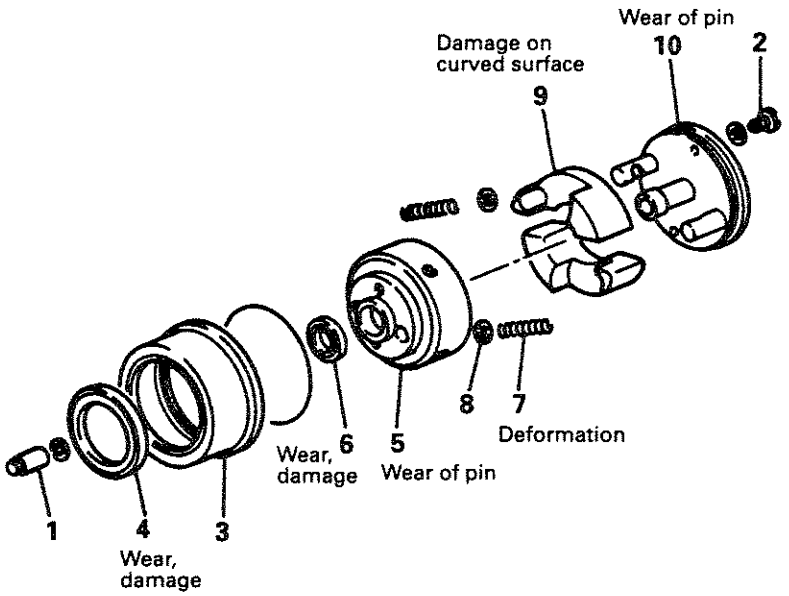

D3152A

Disassembly sequence

1	Round nut	6	Oil seal
2	Timer plug	7	Timer spring
③	Timer case	8	Shim
④	Oil seal	9	Flyweight
5	Flange	10	Flyweight holder

5.7.2 Installation and adjustment

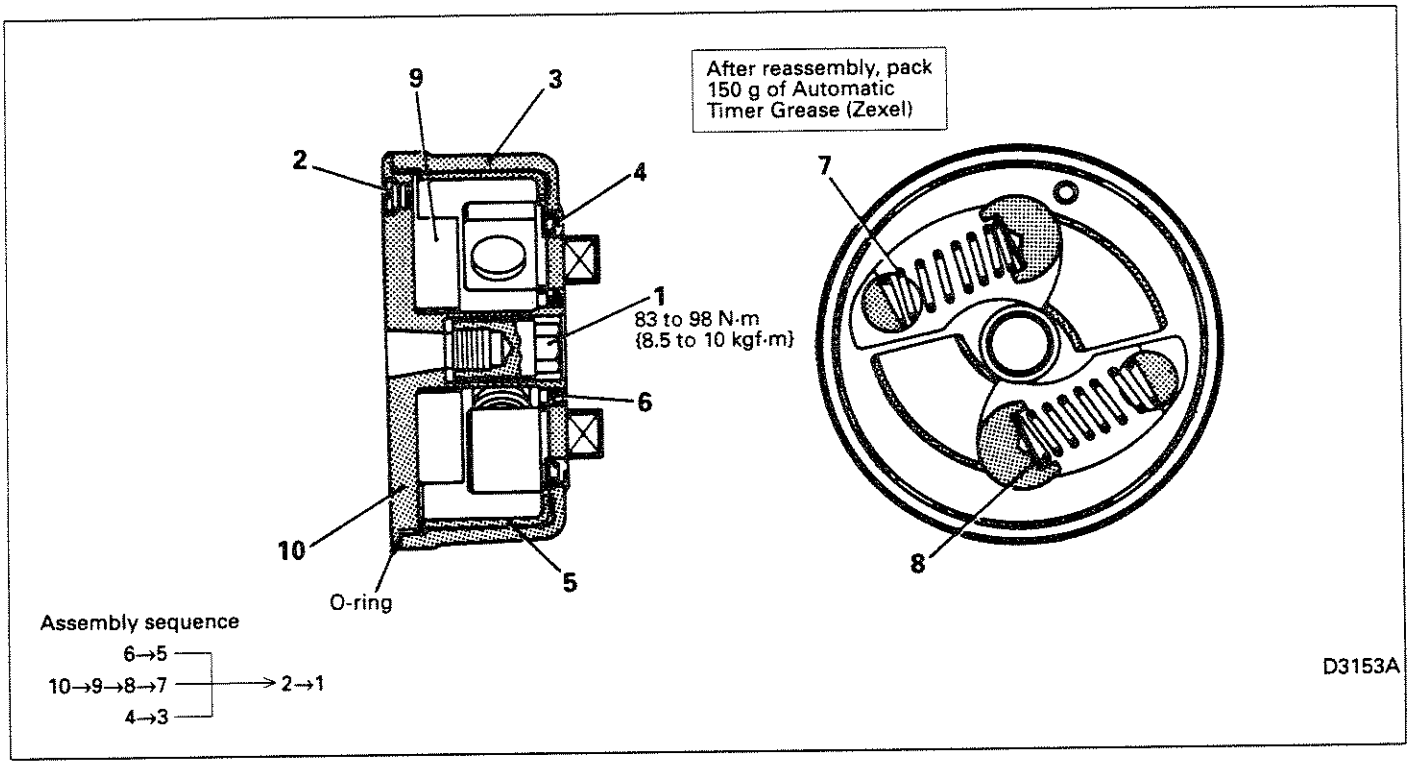

Automatic timer advance characteristics

To adjust the automatic timer's advance characteristics, increase or decrease the number of shims, or replace the springs. Thicker shims reduce the advance angle; thinner shims increase it.

Shim thickness (6 types): 0.1, 0.15, 0.2, 0.5, 1.0,1.5

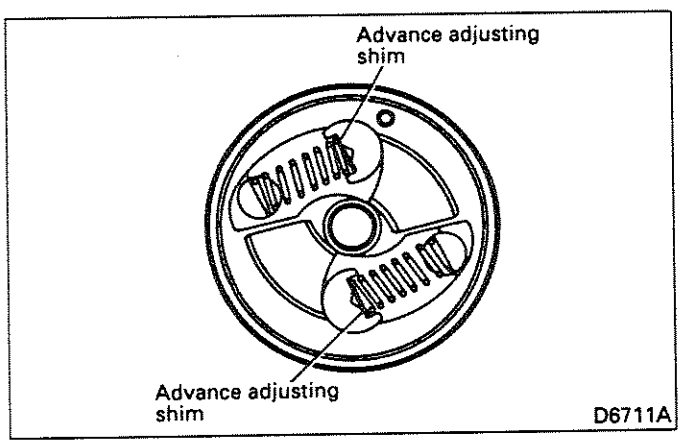

5.8 SP Type Automatic Timer

The following Zexel special tools should be used for SP type automatic timer maintenance:

Special tool name	Part No. (Zexel product No.)	Application
SP type automatic timer special tool set (includes items marked with "*")	105790-5050	Disassembly and reassembly
Box spanner	*157915-2320	Removal and installation of round nut
Box wrench	*157916-2800	
Special spanner	157916-5320	Removal and installation of timer
Extractor	157926-6420	
Base	*157924-2520	Disassembly and reassembly
Special spanner	157916-8320	

5.8.1 Removal and inspection

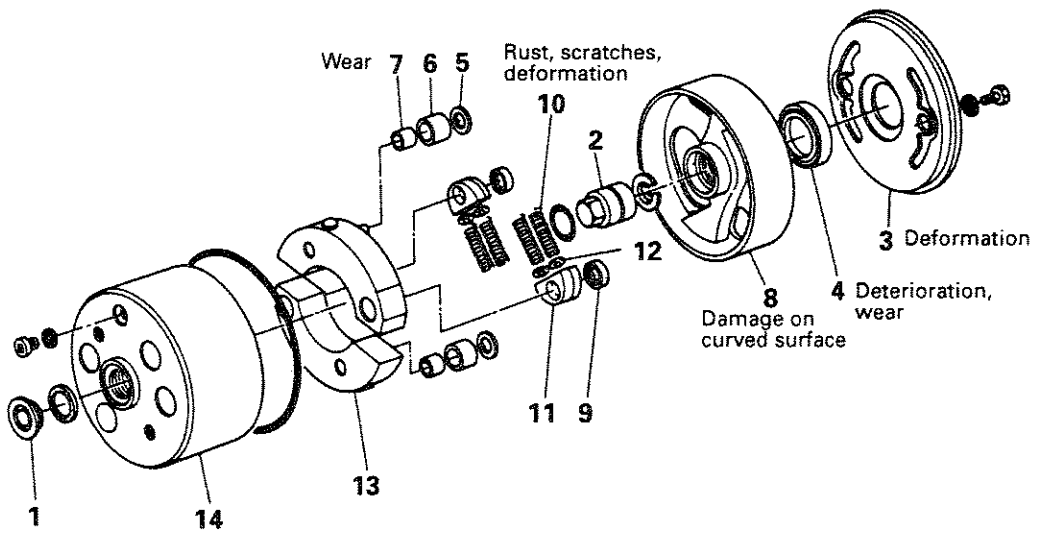

D3103A

Disassembly sequence

1 Cap screw
2 Round nut
3 Cover
4 Oil seal
5 Washer
6 Roller
7 Bushing
8 Flange
9 Retainer
10 Timer spring
11 Spring seat
12 Shim
13 Flyweight
14 Timer housing

5.8.2 Installation and adjustment

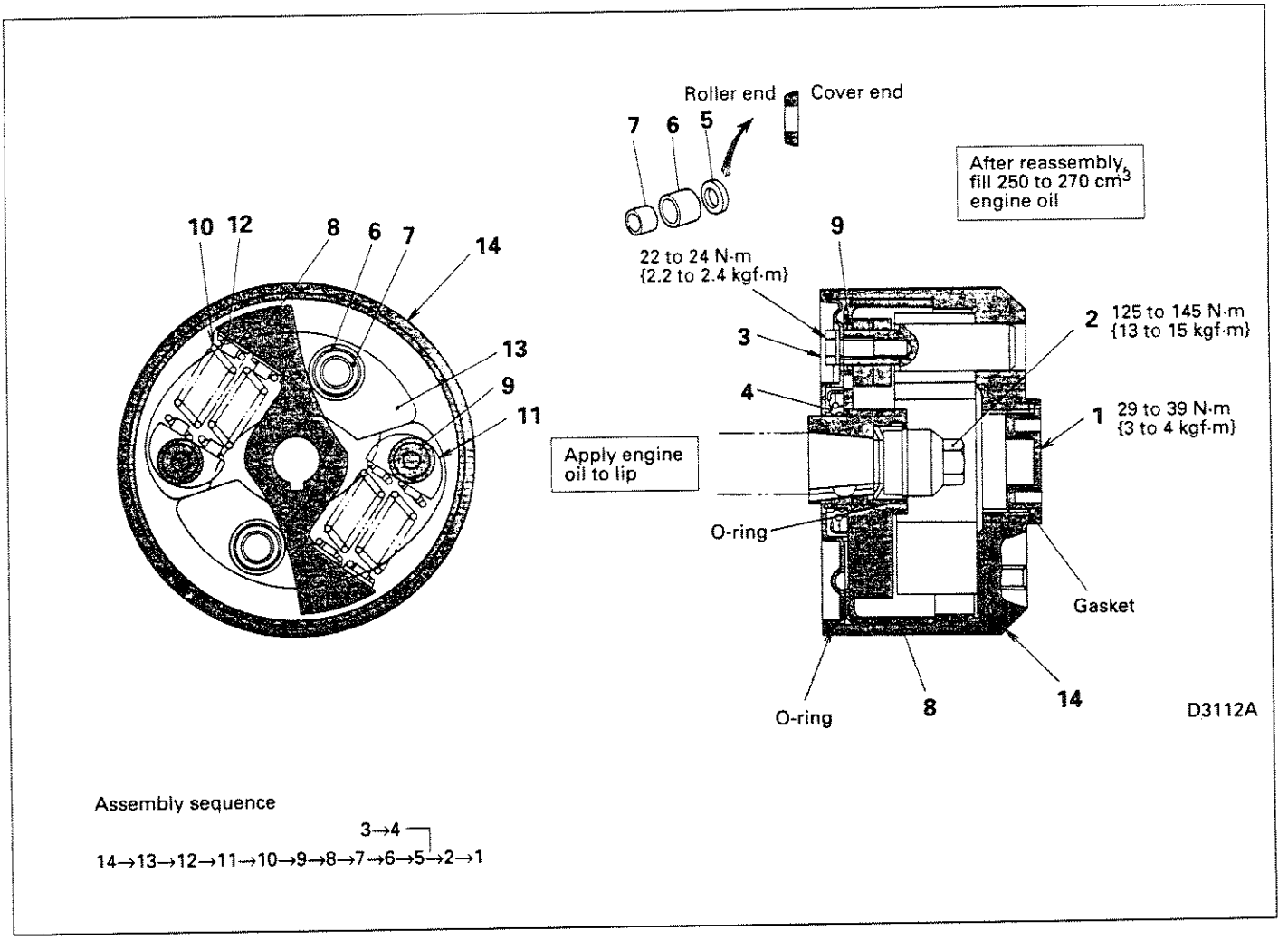

Adjustment of automatic timer timing advance characteristics

To adjust the automatic timer advance characteristics, increase or decrease the number of adjusting shims, or replace the spring. Using a thicker shim makes the advance smaller.

Shim thickness (12 types):
0.1, 0.2, 0.3, 0.4, 0.5, 0.6, 0.7, 0.8, 0.9, 1.0, 1.5, 2.0

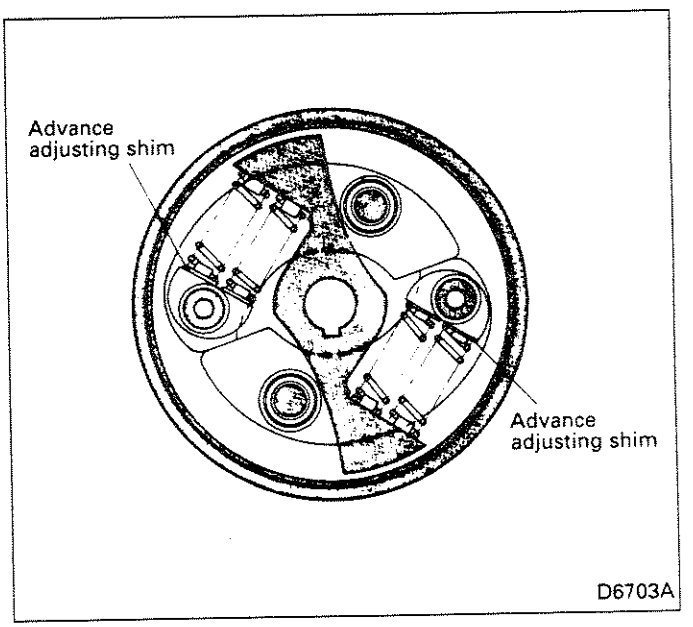

5.9 SPG Type Automatic Timer

The following Zexel special tools should be used for SPG type automatic timer maintenance:

Special tool name	Part No. (Zexel product No.)	Application
Spring insert	157921-9820	Removal and installation of timer spring

5.9.1 Removal and inspection

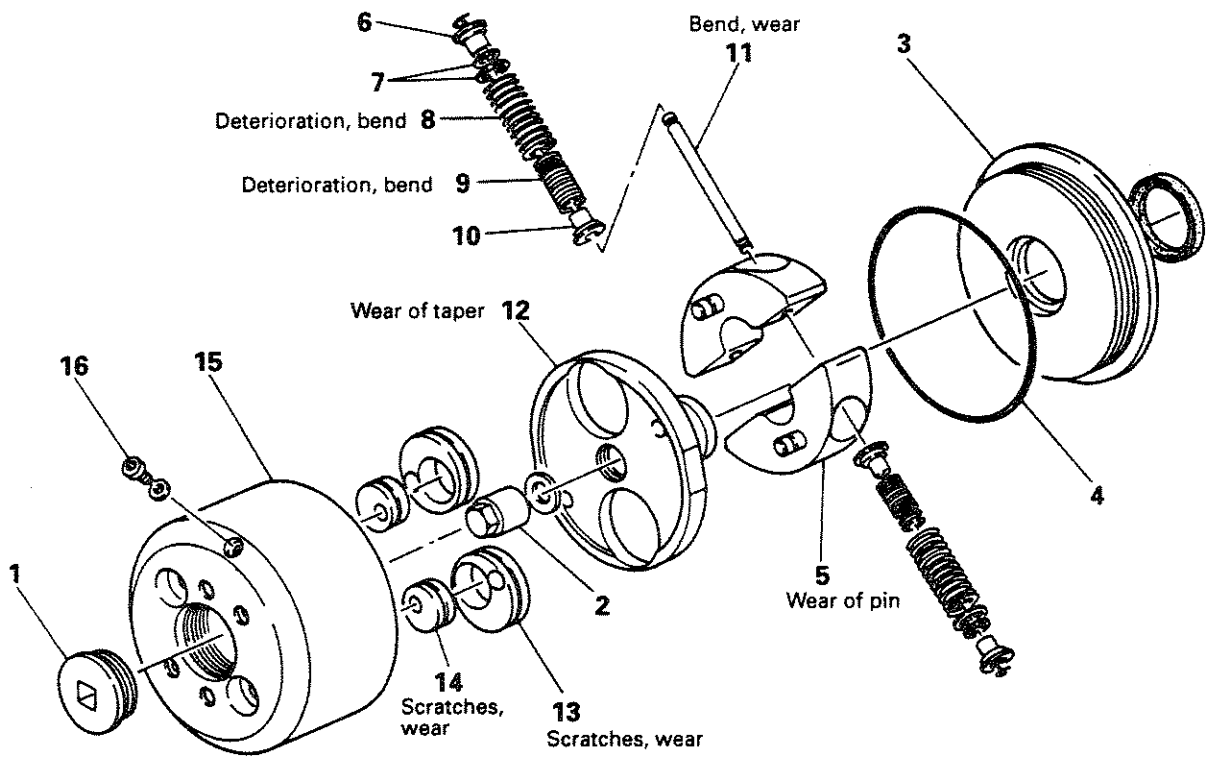

B0023B

Disassembly sequence

1 Cap
2 Round nut
3 Cover
4 O-ring
5 Flyweight
6 Spring seat
7 Shim
8 Timer spring
9 Timer spring
10 Spring support
11 Pilot pin
12 Timer holder
13 Eccentric cam (large)
14 Eccentric cam (small)
15 Timer housing
16 Bolt

5.9.2 Installation and adjustment

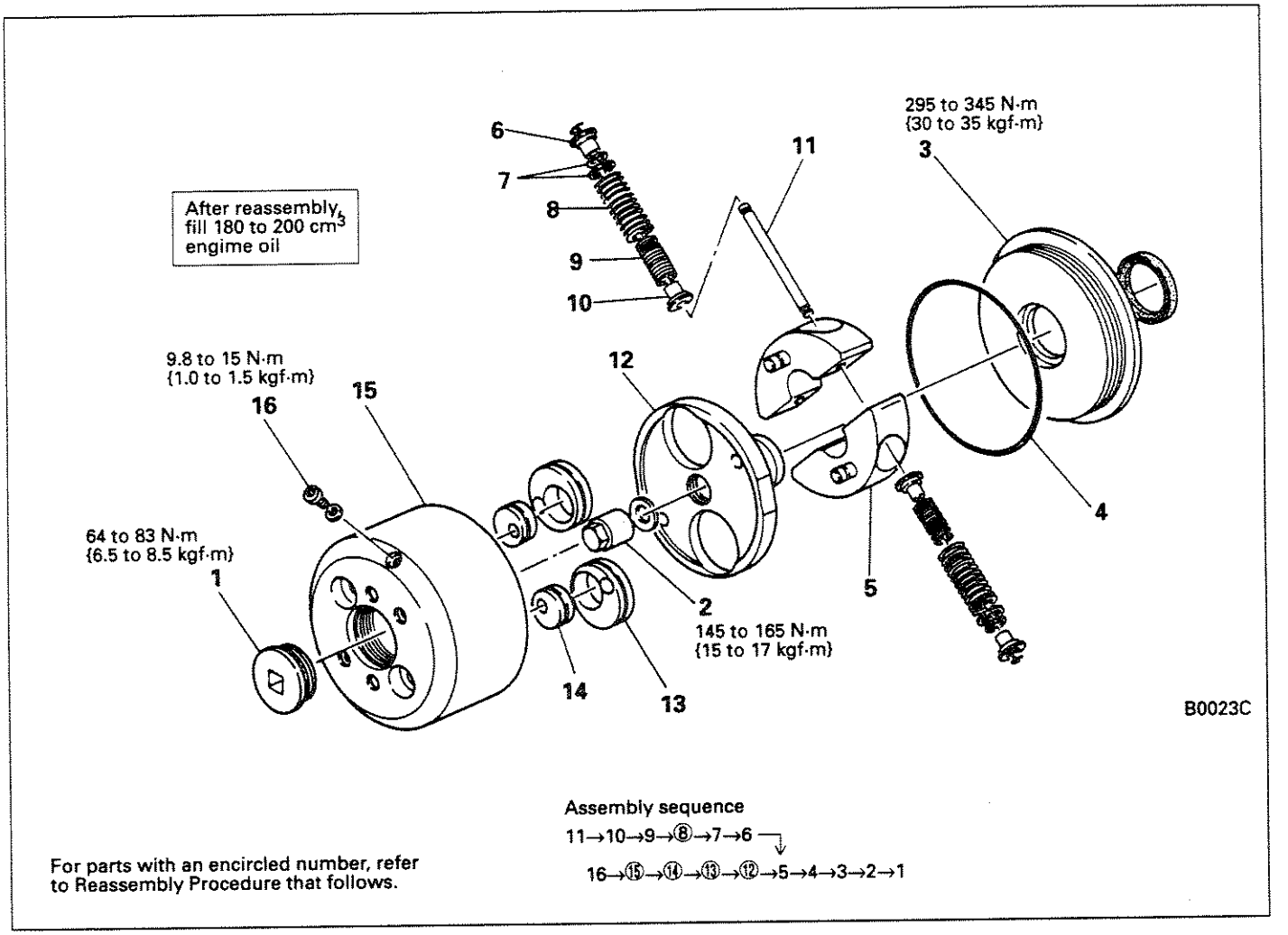

Reassembly Procedure

(1) If the timer spring is of the uneven pitch type, place the wider pitch coiled end outside.

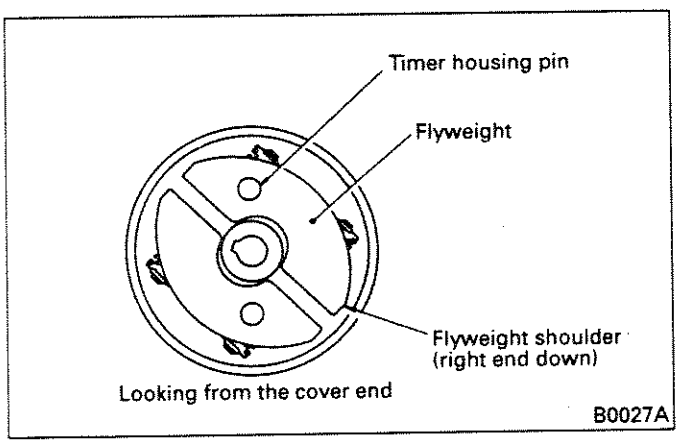

(2) Install the eccentric cams (large and small) in the correct directions using alignment marks on the periphery of the timer housing as reference. The timer housing and large eccentric cam should rotate in the same direction as the timer holder as flyweights lift, as viewed from the drive end. With the two timing housing pins aligned vertically, the flyweight shoulder should be lower on the right end.

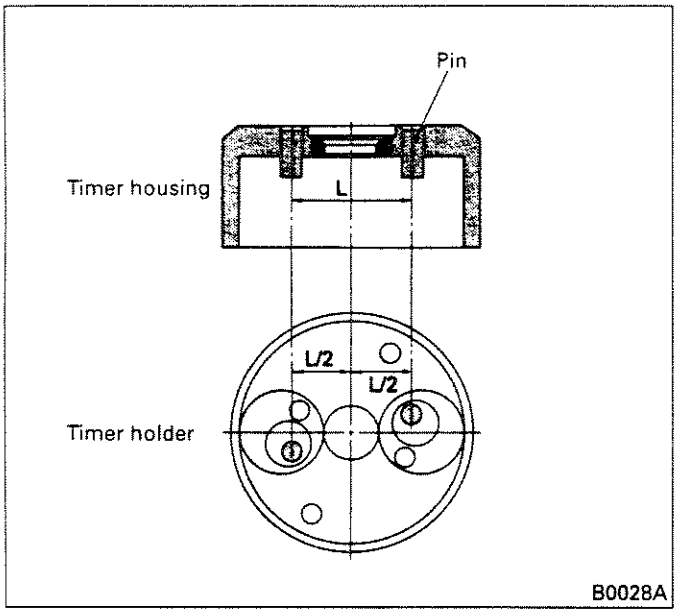

(3) With the keyway in timer holder facing down, turn the small eccentric cam as necessary so that the distance between the centerline of the small eccentric cam and that of the timer holder is the same on the right and left, and that it measures 1/2 of the center-to-center distance of the timer housing pins.
(4) After reassembly, feed lubricating oil into the timer up to a point about 1 mm below the flyweight top end surface.

Adjustment of automatic timer advance characteristics

To adjust the advance characteristics of the automatic timer, add or remove shims or replace the spring. Adding shims makes advance smaller.

Shim thickness (4 types): 0.1, 0.3, 0.5, 1.0

5.10 Bleeding of Fuel System

Perform fuel system air bleeding as follows.

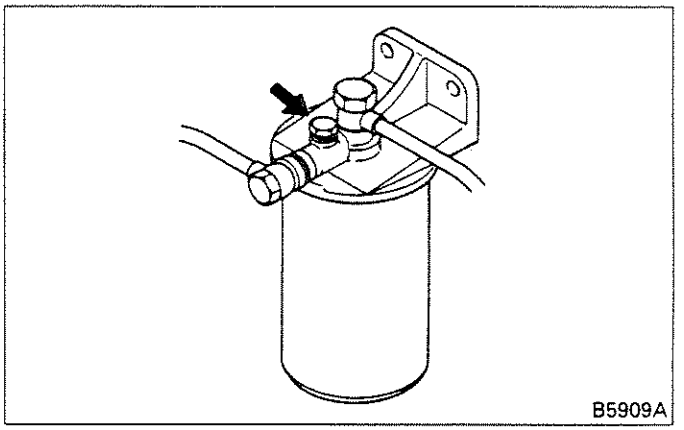

(1) Loosen air plug of fuel filter.

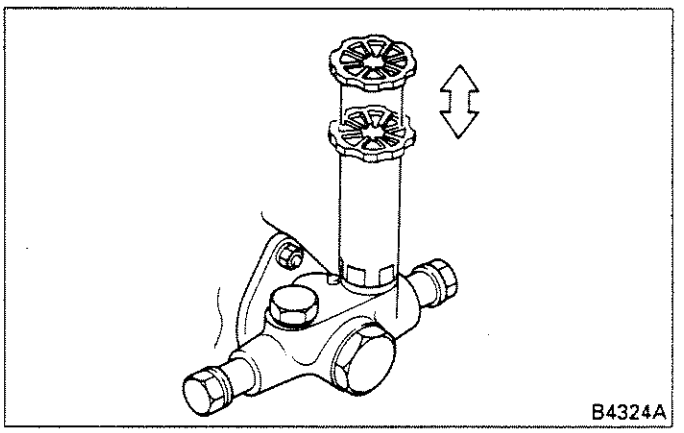

(2) Turn counterclockwise the priming pump knob of injection pump so that it comes loose.
(3) Move priming pump knob up and down to feed fuel until air bubble does not come out from air plug.
(4) With no air bubble coming out in fuel, tighten air plug.
(5) Move priming pump knob up and down several times, then screw in knob.

NOTE:
Sop up fuel spilt around.

(6) Actuate starter to discharge air in injection pump and pipe.

NOTE:
Do not actuate starter for more than 15 seconds.

5.11 Inspection and Adjustment after Installing the Injection Pump

5.11.1 Inspection and adjustment of fuel injection start timing

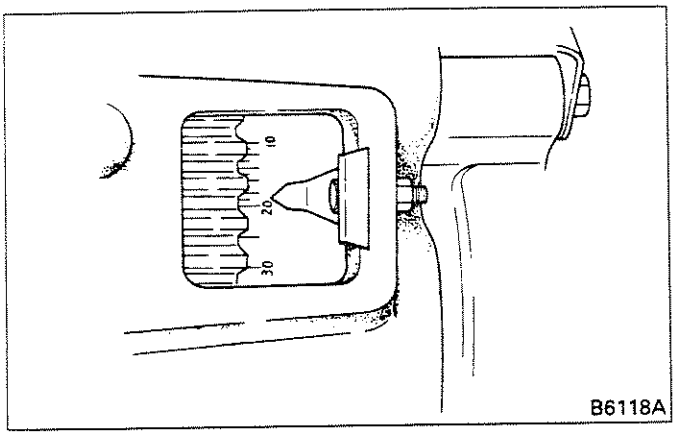

(1) Crank the crankshaft more than 180° in forward direction to line up the pointer with the fuel injection start timing angle scale inscribed on the outside periphery of the flywheel.

NOTE:
If the engine is turned in reverse direction (either when the engine is stopped or by cranking), the automatic timer will stay advanced and may not return to normal even if the engine is slightly cranked in the normal direction. Make sure that the engine is cranked manually more than 180° in the normal direction.

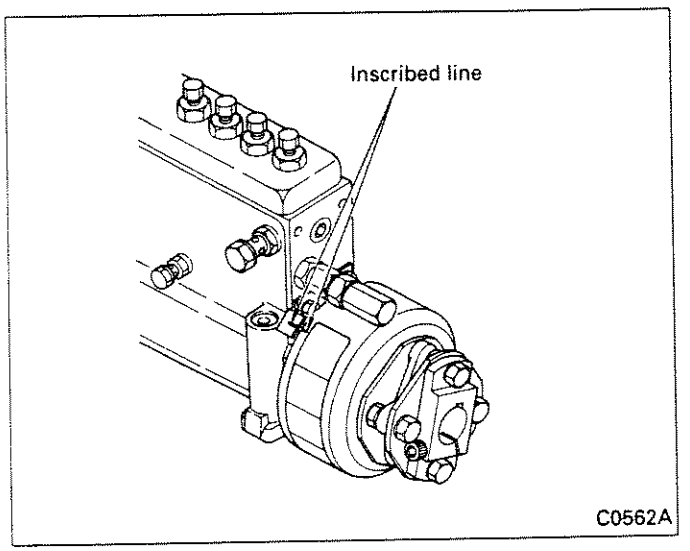

(2) If the inscribed mark of the injection pump and the inscribed mark of the automatic timer are in alignment in the above condition (1), the fuel injection start timing is correct.

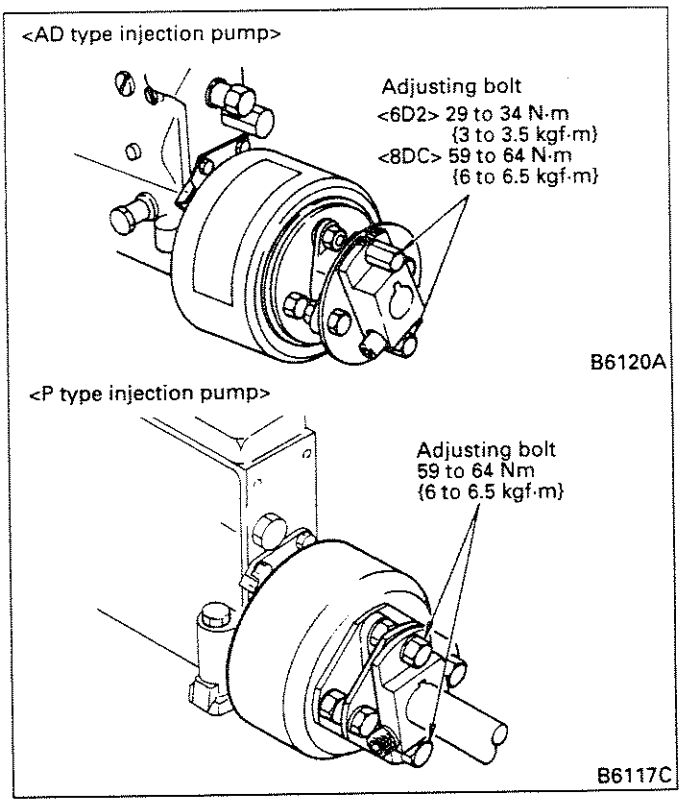

(3) If they are out of alignment, loosen the timing adjusting bolt of the coupling and adjust by turning the automatic timer.
After adjustment, recheck by the procedures of steps (1) and (2), and tighten the timing adjusting bolt to the specified torque.

NOTE:
Do not loosen the bolts of the coupling except the timing adjusting bolt.

5.11.2 Inspection and adjustment of minimum and maximum no-load speeds

Start and idle the engine until it reaches normal operating temperature. Then, make the following checks.

(1) RSV type governor

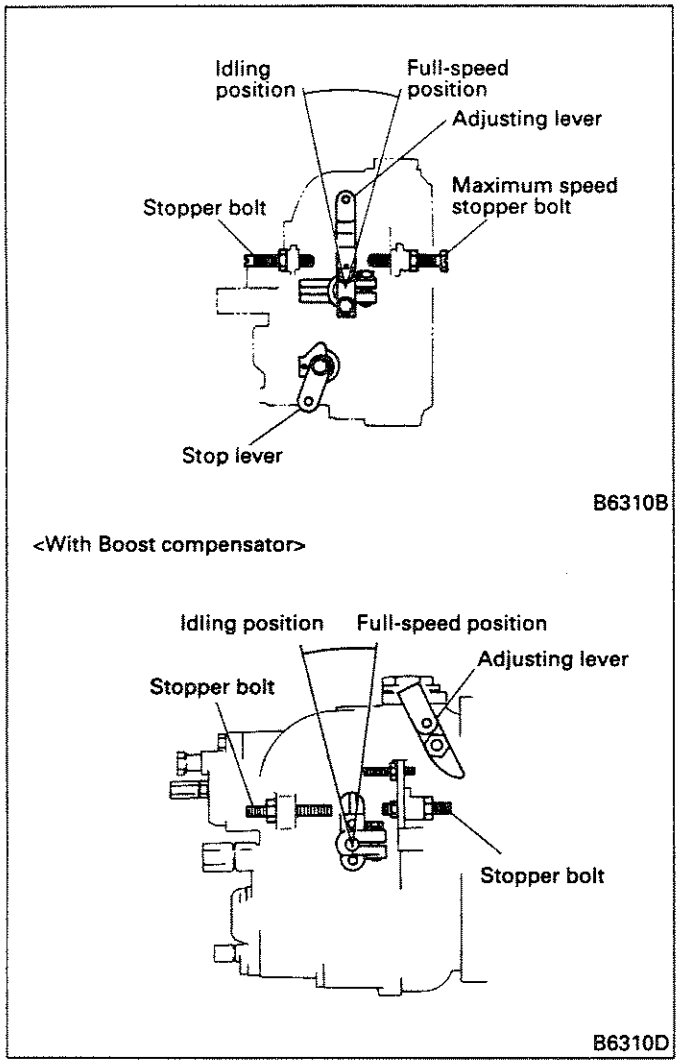

(a) Minimum speed

Make sure that the adjusting lever is in contact with the stopper bolt. In this condition, check that the minimum speed is within the specification. If the specification is not met, adjust with the stopper bolt.

(b) Maximum speed

Place the adjusting lever to the full-speed position. If the maximum speed is outside the specification in this condition, adjust with the maximum speed stopper bolt.

NOTE:

Quickly move the adjusting lever from the full-speed position to the idling position to make sure that the engine does not stall or develop hunting. If defects are evident, adjust within the specification.

(2) RFD type governor

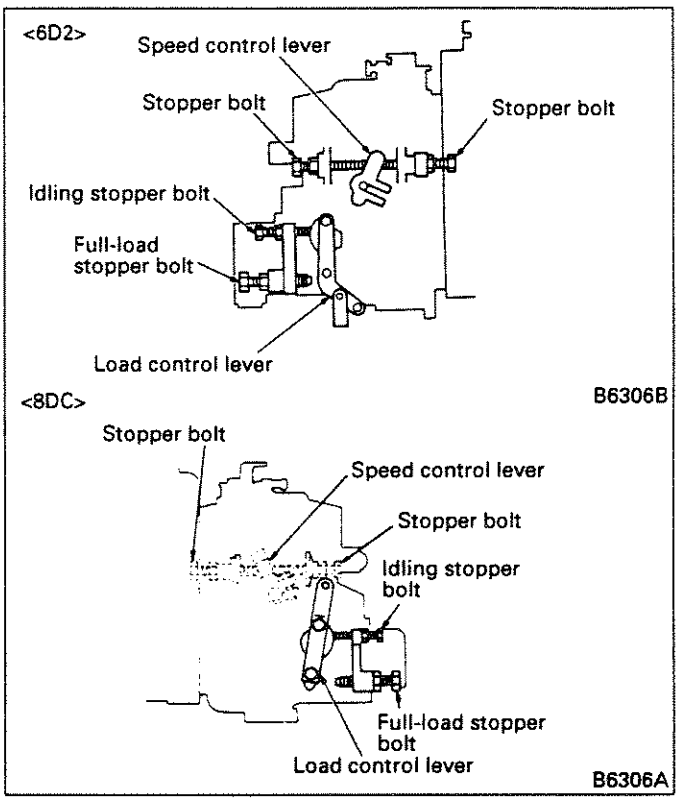

(a) Minimum speed

Check to see that the load control lever is in contact with the idling stopper bolt. In this state, check that the minimum speed is within specified limits. If not, adjust with the idling stopper bolt.

(b) Maximum speed

Set the load control lever at the full-load position (where it contacts the full-load stopper bolt). If the maximum speed is outside specified limits in this state, adjust with the maximum speed stopper bolt and stopper bolt.

NOTE:

1. **Never attempt to change the locked position of the full-load stopper bolt.**
2. **Quickly move the load control lever from the full-load position to the idling position to make sure that the engine does not stall or develop hunting. If defects are evident, adjust within the specification.**

(3) RFD type governor with control cylinder <8DC>

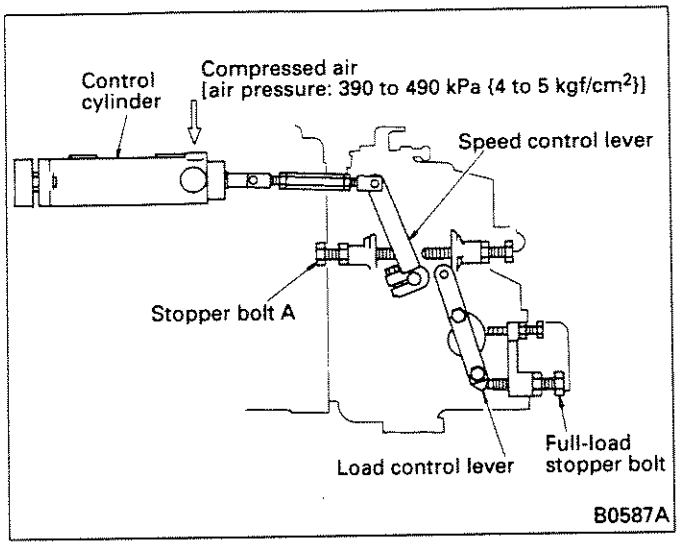

To check and adjust the no-load maximum speed, proceed as follows. Inspection and adjustment procedures of no-load minimum speed are as described above.

(a) Operate the control cylinder with the specified air pressure and check that the speed control lever is in contact with stopper bolt A.

(b) Move the load control lever to the full-load position in this condition (where it contacts the full-load stopper bolt) and measure the maximum speed to see if it is within specification.

(c) If the specification is not met, adjust with stopper bolt A.

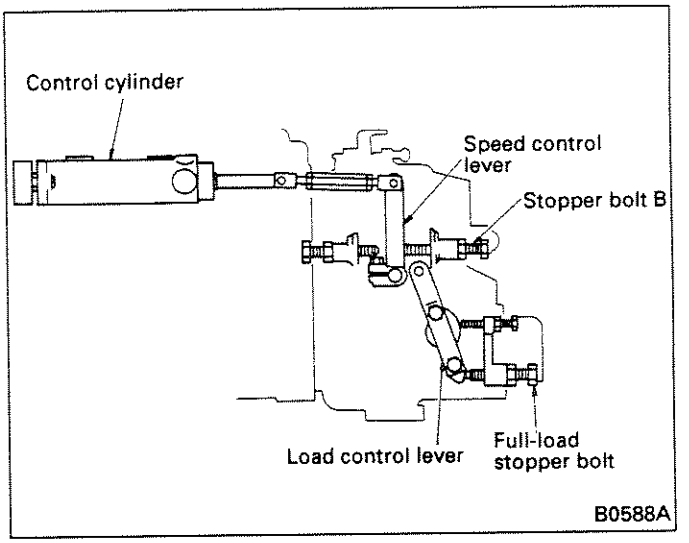

(d) Next, with no air pressure applied to the control cylinder, make sure that the speed control lever is in contact with stopper bolt B.

(e) Place the load control lever into the full position and measure the maximum speed to see if it is within specification.

(f) If the specification is not met, adjust with stopper bolt B.

5.12 Pump Drive Case

5.12.1 Removal and installation

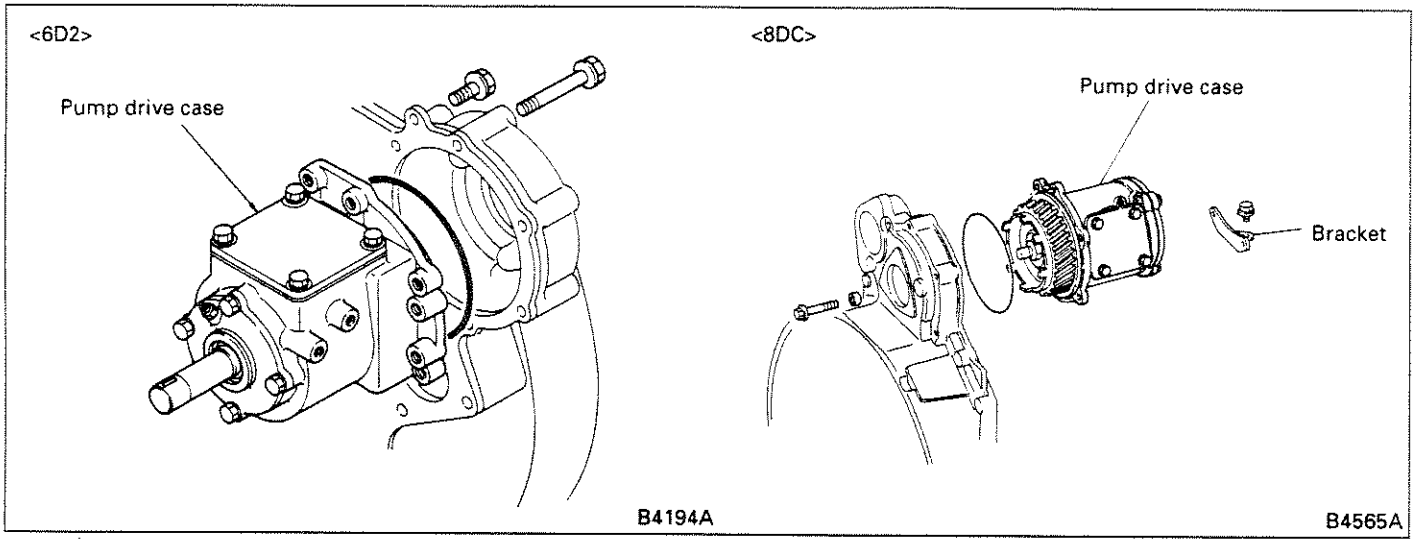

(1) For removal and installation of the pump drive case, refer to Section 5.1.1 in Group 61 Special Equipment.

5.12.2 Disassembly and inspection

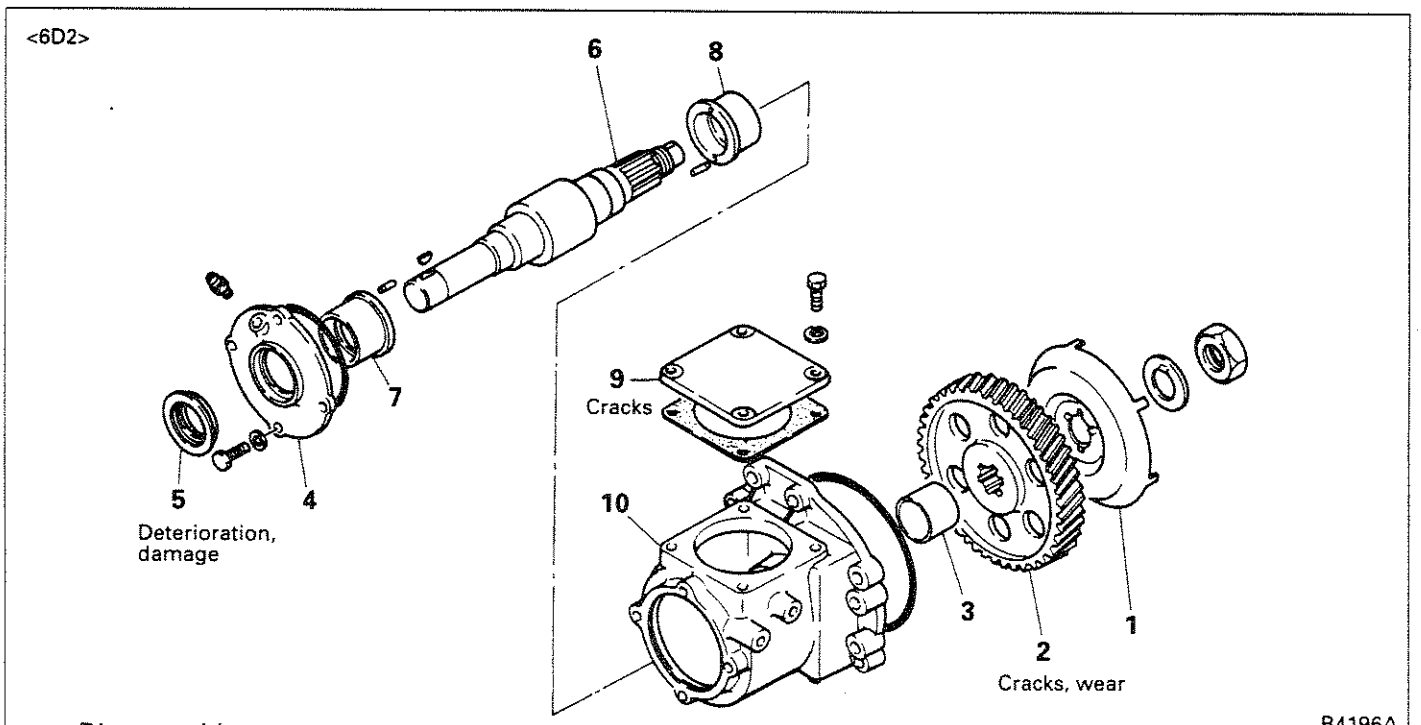

Disassembly sequence

1 Sensor plate
2 Injection pump gear
3 Collar
4 Bearing holder
5 Oil seal
6 Shaft
7 Bearing
8 Bearing
9 Cover
10 Crank case

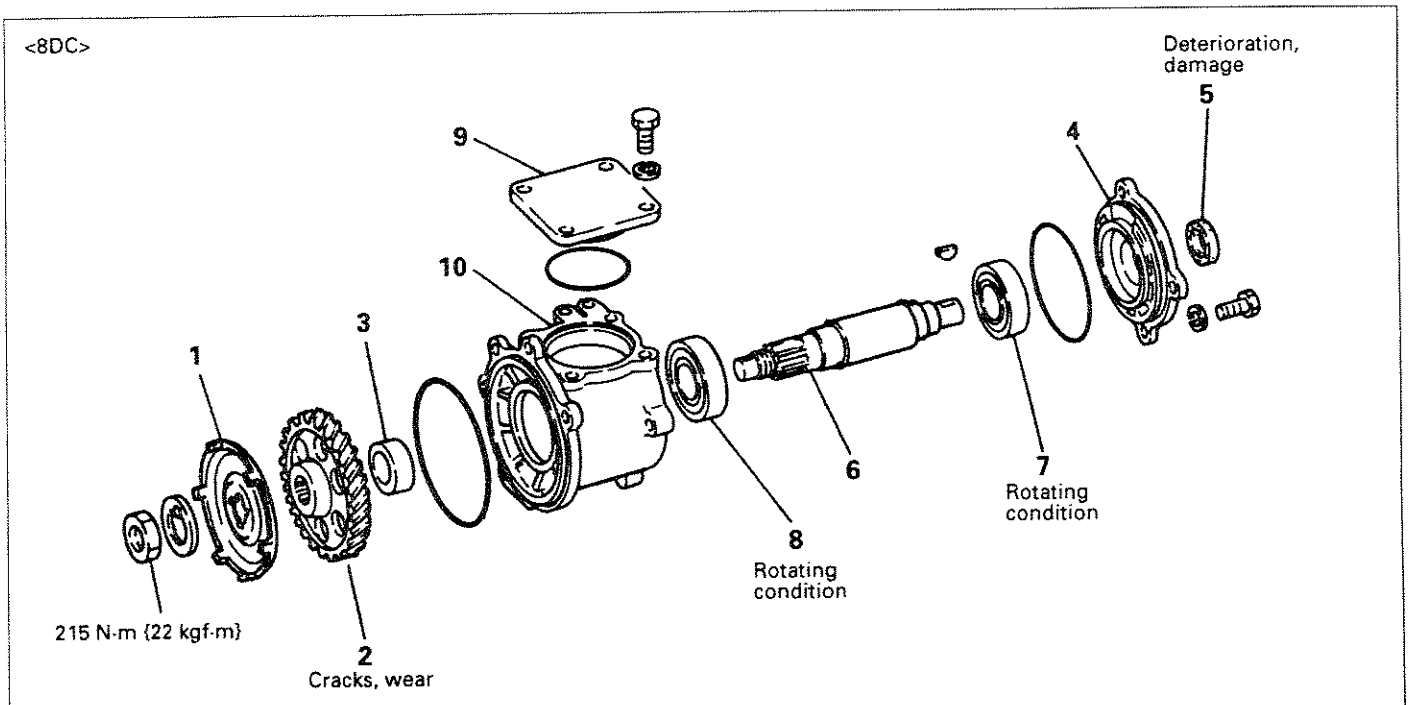

Disassembly sequence

B4578A

1 Sensor plate (guide plate: 8DC8 only)
2 Injection pump gear
3 Spacer
4 Bearing case
5 Oil seal
6 Shaft
7 Rear bearing
8 Front bearing
9 Cover
10 Crank case

5.12.3 Reassembly

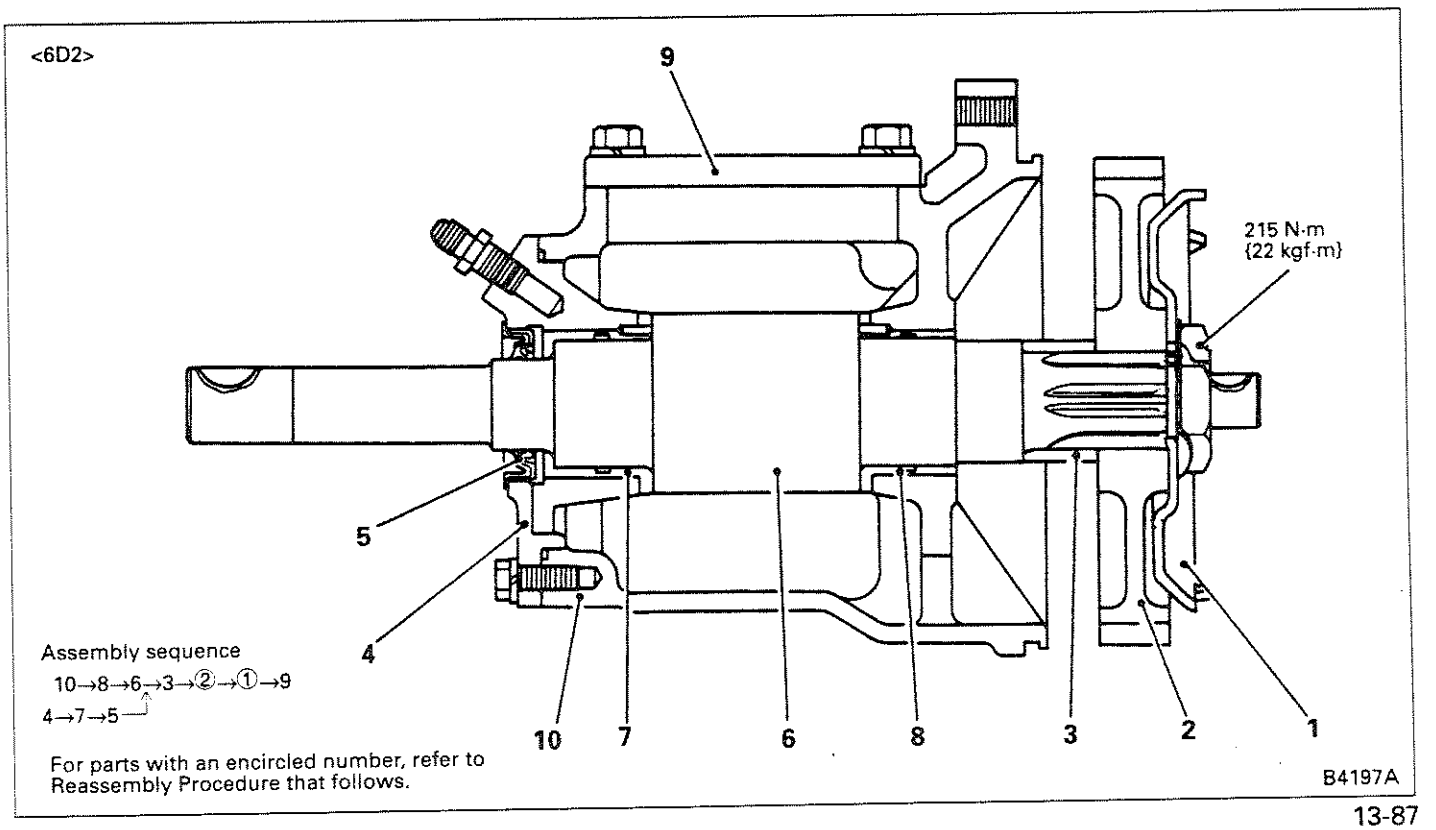

Assembly sequence
10→8→6→3→②→①→9
4→7→5

For parts with an encircled number, refer to Reassembly Procedure that follows.

B4197A

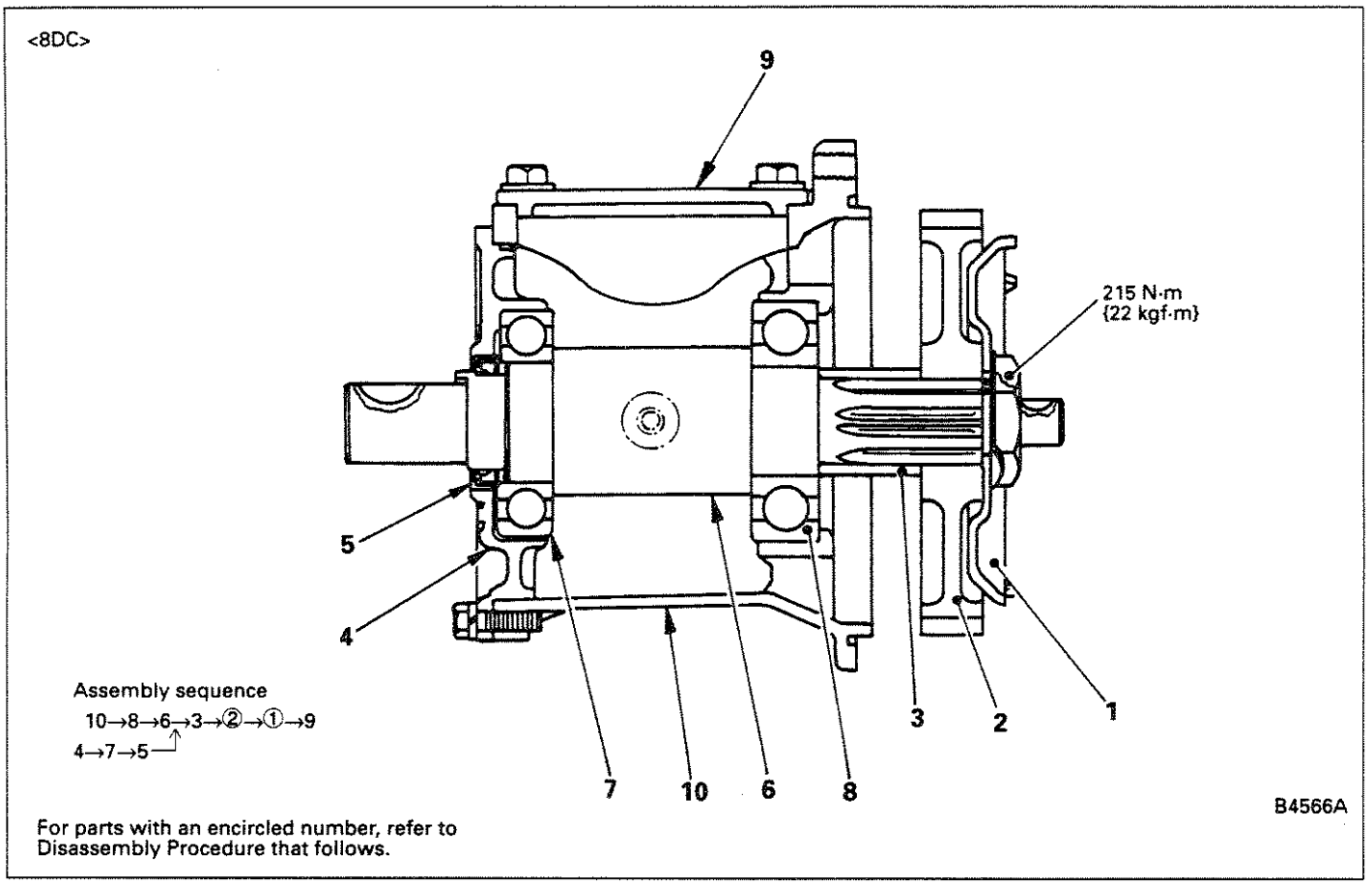

(1) Installation of injection pump gear

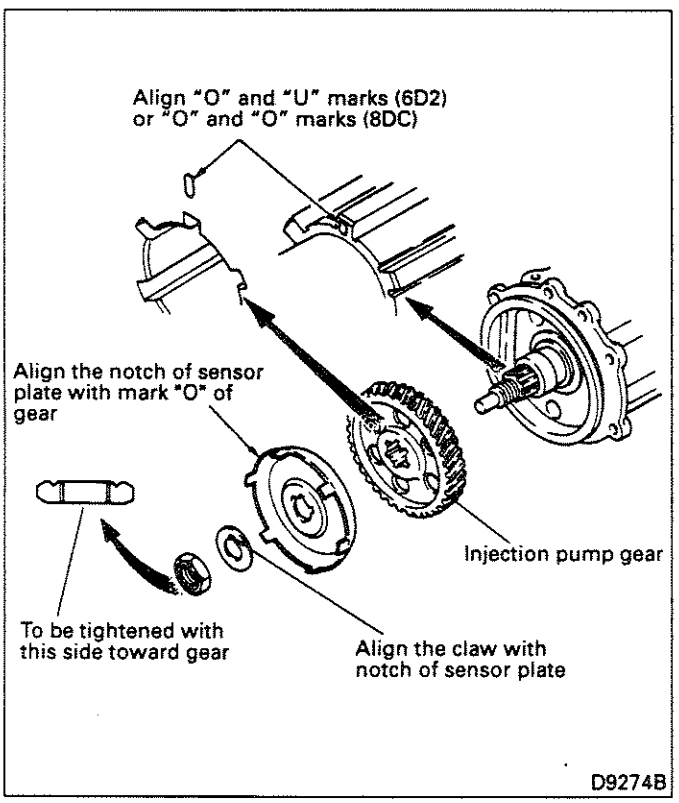

Install the injection pump gear, sensor plate (or guide plate) and nut as shown.

5.13 Injection Nozzle

5.13.1 Removal and installation

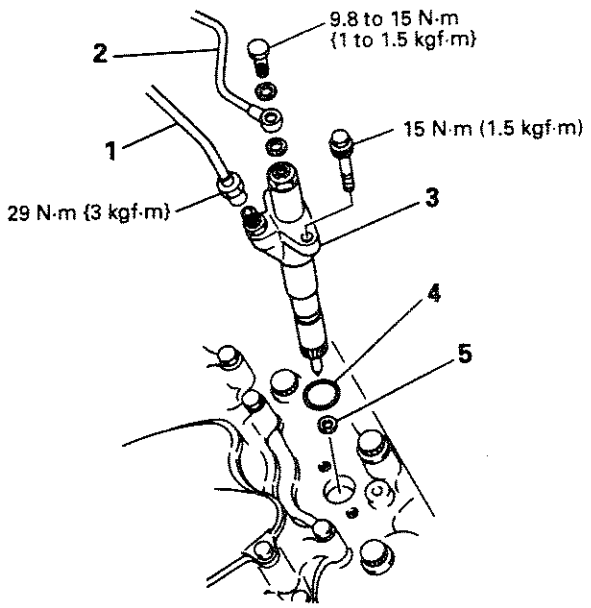

1 Injection pipe
2 Leak-off pipe
3 Injection nozzle
4 Dust seal
5 Nozzle tip gasket

C0577B

5.13.2 Disassembly

<1-spring nozzle>

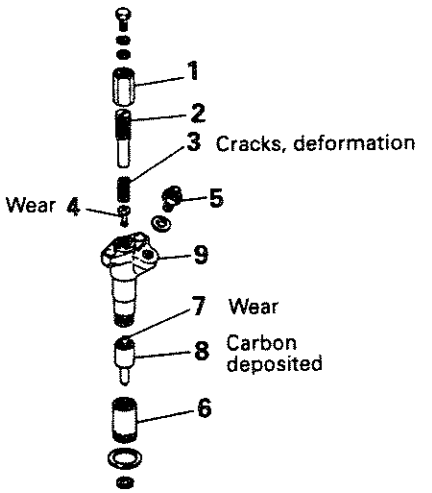

1 Cap nut
2 Adjusting screw
3 Spring
4 Push rod
5 Inlet connector
6 Retaining nut
7 Needle valve
8 Nozzle
9 Nozzle holder

D7027A

<2-spring nozzle: except identification mark "2D">

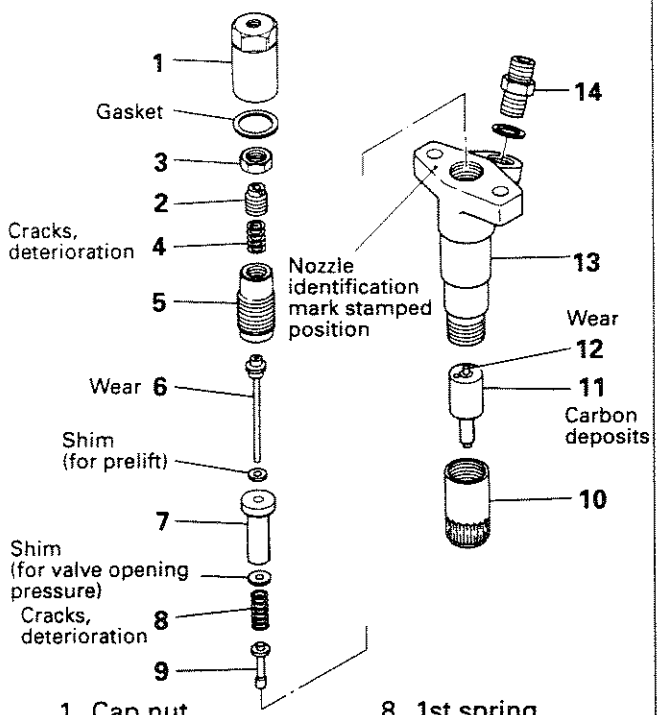

1	Cap nut	8	1st spring
2	Adjusting screw	9	1st push rod
3	Lock nut	10	Retaining nut
4	2nd spring	11	Nozzle
5	Set screw	12	Needle valve
6	2nd push rod	13	Nozzle holder
7	Spacer	14	Inlet connector

D7015A

<2-spring nozzle: identification mark "2D">

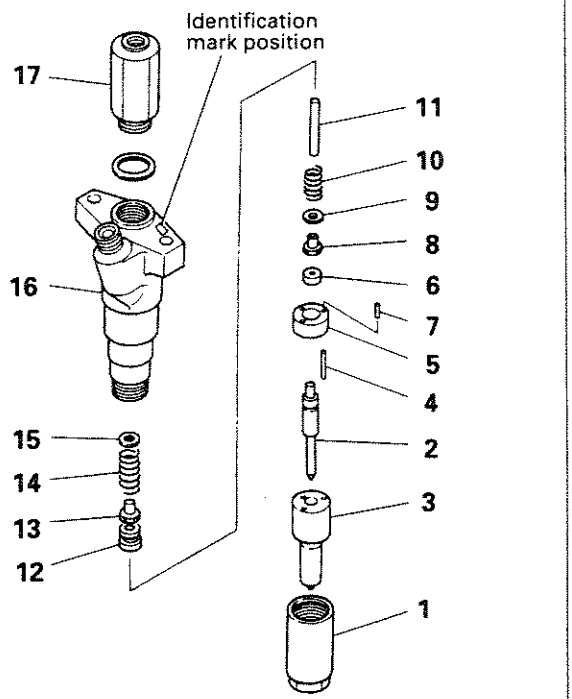

15449

①	Retaining nut	10	2nd spring
2	Needle valve	11	Push rod
3	Nozzle	12	Callor
4	Pin (ϕ3)	13	Spring seat
5	Spacer	14	1st spring
6	Lift piece	15	Shim (For adjustment of primary valve opening pressure)
7	Pin (ϕ2.5)	16	Nozzle holder
8	Spring seat	17	Leak-off connector
9	Shim (For adjustment of secondary valve opening pressure)		

NOTE:

1. **Clean off any carbon deposits before disassembling, reassembling, or adjusting any nozzle assembly. Note, however, that the spray pressure and shape should be inspected and the assembly checked for oil leaks first. If no abnormalities are apparent, do not commence disassembly.**
2. **Under no circumstances change the combination of needle valves and nozzles used.**

Disassembly Procedure

The following special tools should be used in disassembly:

Tool name	Part No. (Zexel product No.)
Plate	157944-9520
Special Wrench	157914-2800

Removing retaining nut

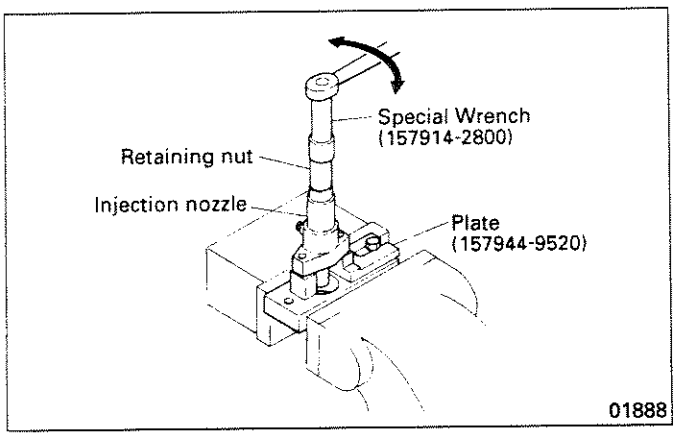

Secure the Plate (special tool) in a vise and fit the injection nozzle onto it. Loosen and remove the retaining nut using the Special Wrench (special tool).

5.13.3 Cleaning and inspection

(1) Cleaning

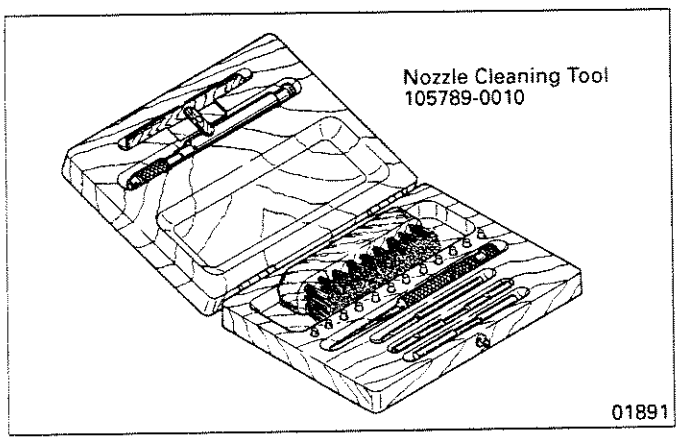

After washing the nozzle in gas oil, remove deposited carbon using Nozzle Cleaning Tool (special tool) by the following procedures.

NOTE:
Never change the combination of the nozzle and needle valve.

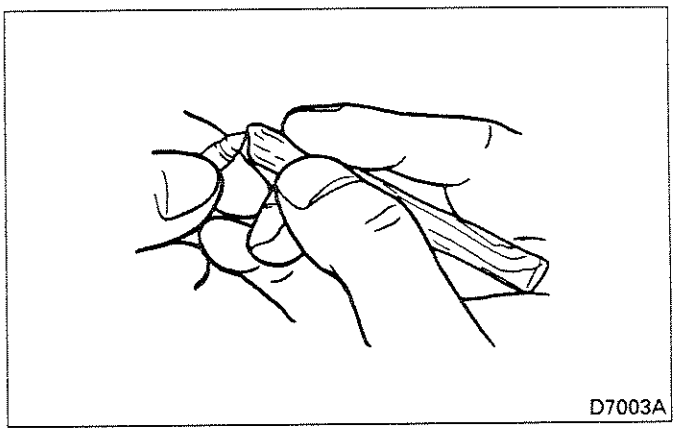

(a) Remove the needle valve from the nozzle and clean the needle valve with the needle valve cleaning wood piece.

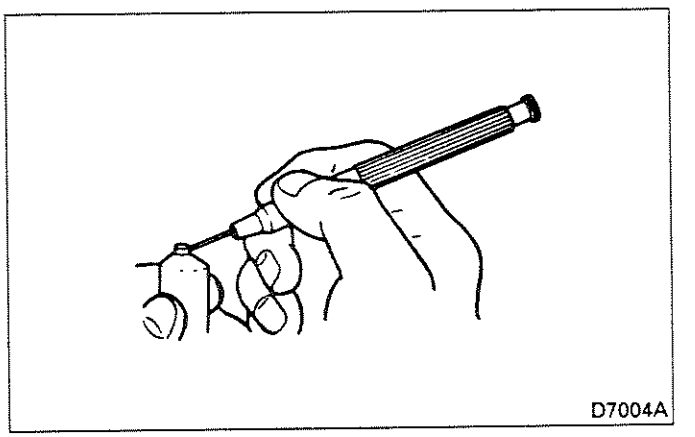

(b) Insert, while turning, a cleaning needle into the injection orifice of the nozzle to remove carbon.

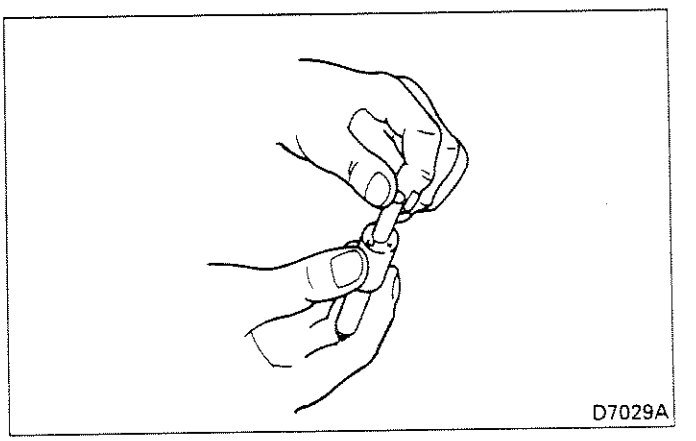

(c) Clean the nozzle seat using the cleaning needle.
(d) To remove burnt and hardened carbon, use FUSO Carbon Remover or equivalent.

(2) Inspection

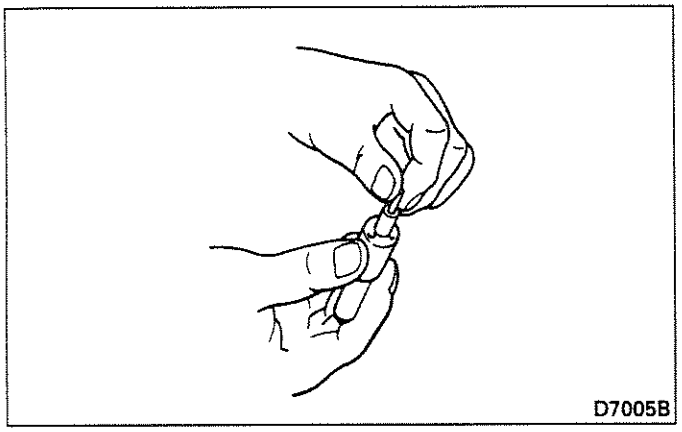

Clean and immerse the nozzle in gas oil, slide the needle valve and check that it moves smoothly.
Next, pull up the needle valve vertically about 1/3 of its entire stroke and check that it falls under its own weight. If it does not fall, replace the nozzle.

5.13.4 Reassembly and adjustment <1-spring nozzle>

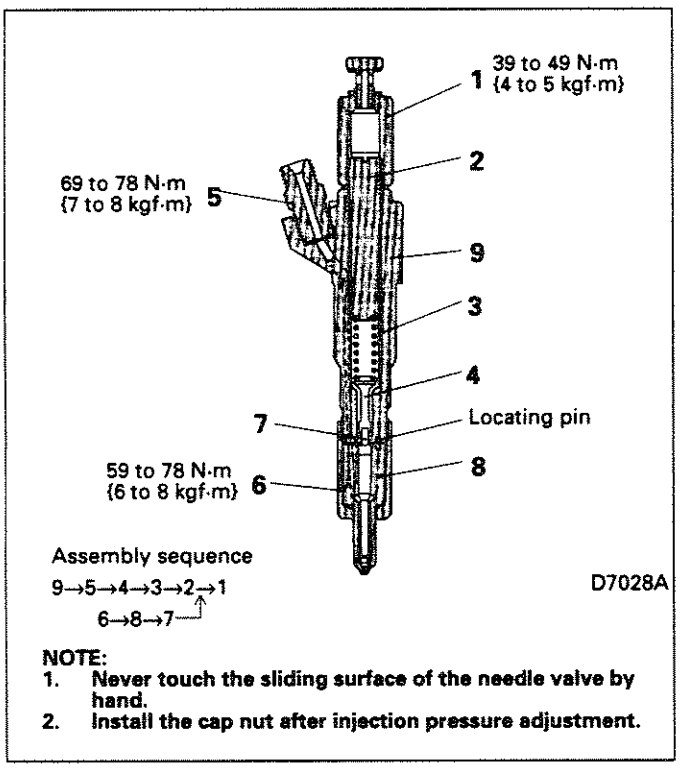

(1) Injection pressure

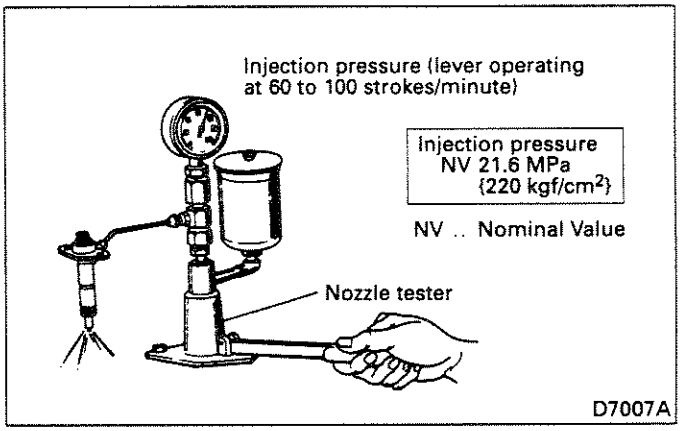

(a) Remove the cap nut and install to the nozzle tester.
(b) Loosen the adjusting screw and operate the nozzle tester two or three times for bleeding.
(c) Operate the nozzle tester at specified speed, adjusting the adjusting screw for specified injection pressure.

NOTE:
Never let yourself exposed directly to the atomized fuel injected from the nozzle.

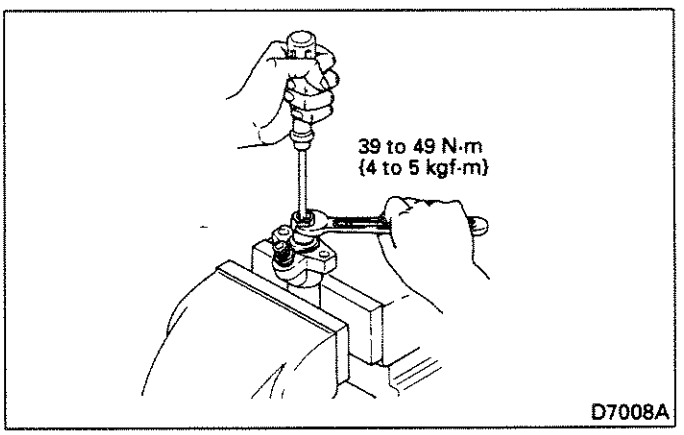

(d) After adjustment, tighten the cap nut to specified torque. Fix the adjusting screw with a screwdriver inserted through the cap nut hole to prevent turning of the adjusting screw.
(e) After tightening the cap nut, check again the injection pressure.

(2) Spray condition

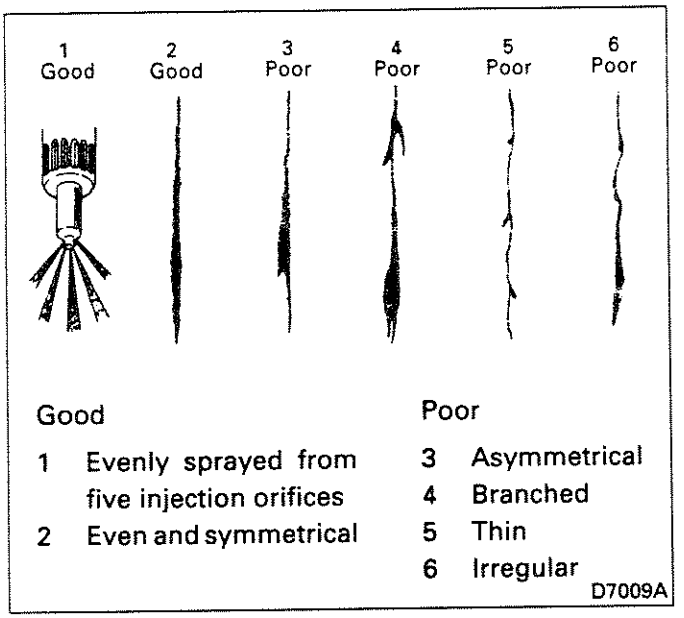

When adjusting the pressure with a nozzle tester, check also for clogged injection orifices, spray condition, and fuel leaks from the orifices. Replace the nozzle if defective.

(3) Fuel tightness test

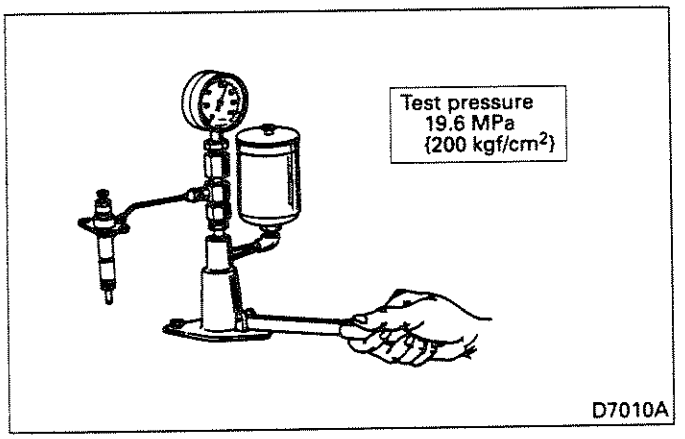

Install a nozzle that has been adjusted to specified injection start pressure to the nozzle tester. Slowly increase the pressure to the test pressure and keeping this condition, check for fuel leaks from the bottom of the nozzle. The nozzle is functioning normally if there is no leak.

5.13.5 Reassembly and adjustment <2-spring nozzle: except identification mark "2D">

Adjust while assembling the parts by the following procedures.
As the prelift is adjusted in 1/100 mm increments, use clean detergent to thoroughly remove dust and dirt before adjustment.
The following special tools should be used when making adjustments:

Tool name	Zexel product No.
Adjusting Device	105789-0500

Adjusting Device (105789-0500) components

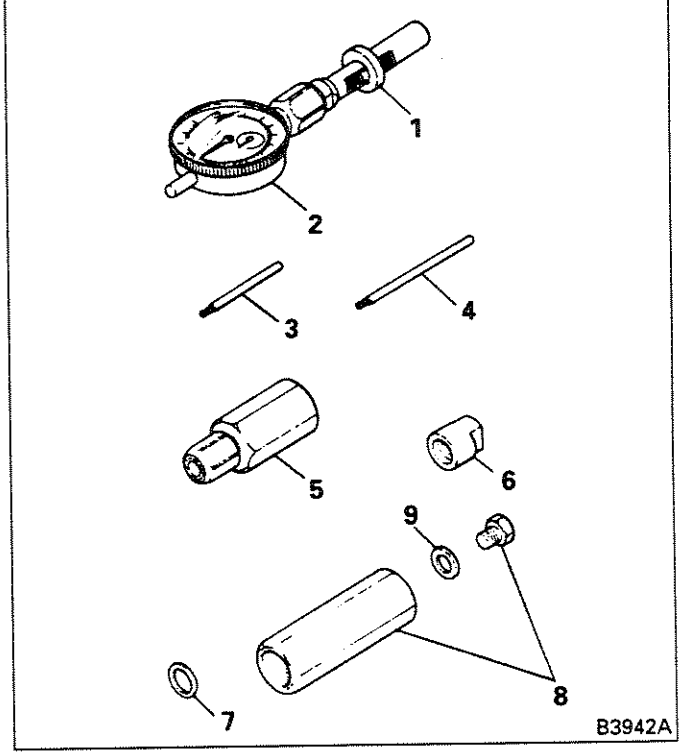

1	Adjusting device assembly	157892-0220
2	Dial gauge	157954-3800
3	Pin ℓ = 50 mm	157892-1200
4	Pin ℓ = 60.5 mm	157892-1100
5	Connector assembly	157892-1320
6	Base	157892-1800
7	Gasket <for Retaining nut>	157892-1500
8	Retaining nut for adjustment	157892-1420
9	Gasket <for bolt of retaining nut>	026508-1140

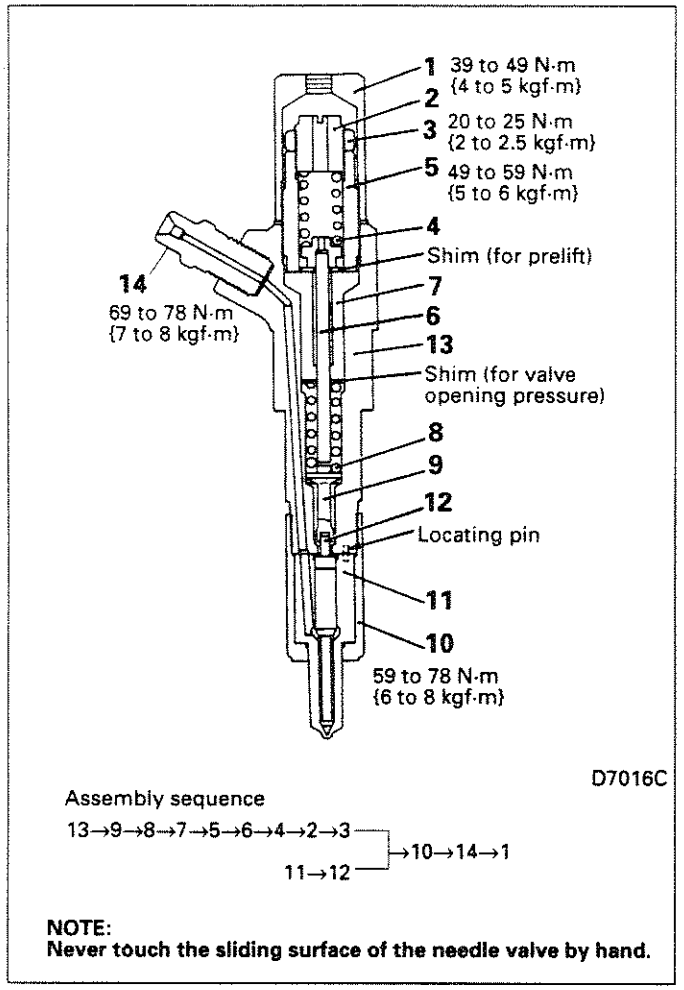

NOTE:
Never touch the sliding surface of the needle valve by hand.

Adjusting Steps

① Adjustment of nozzle opening pressure
② Selection of prelift adjusting shims
③ Adjustment of 2-spring adjusting pressure
*④ Check of needle valve full lift
⑤ Installation of prelift shims
*⑥ Checking of prelift
*⑦ Checking of 2-spring adjusting pressure
⑧ Inspection

Inspection make operations marked with * as necessary for inspection or confirmation.

(1) Adjustment of nozzle valve opening pressure

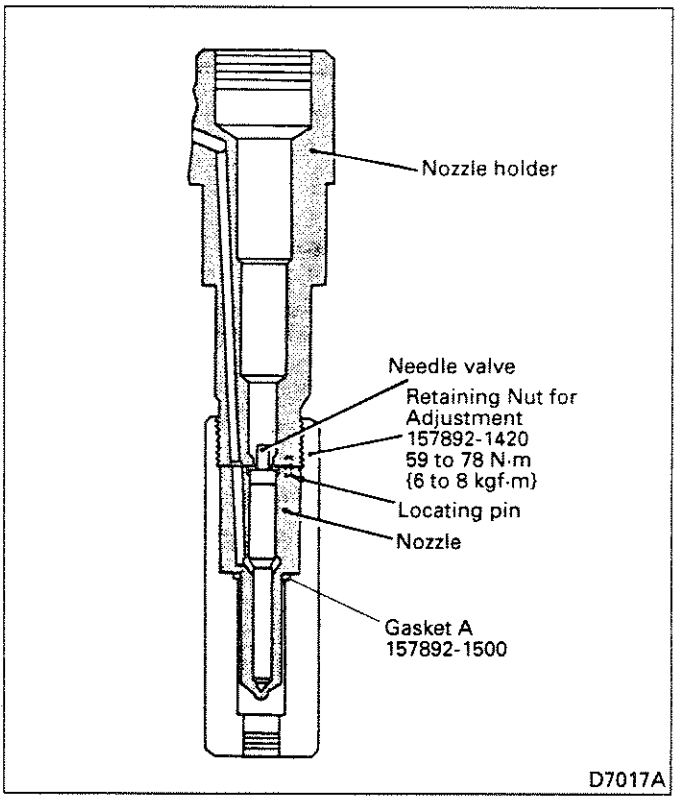

(a) Using the Retaining Nut for Adjustment (special tool), install the nozzle and needle valve to the nozzle holder.

NOTE:

1. **Make sure that the knock pin has seated completely in the nozzle before tightening the Retaining Nut for Adjustment. Tighten the retaining nut finger tight and then tighten to specified torque using a torque wrench.**
2. **Remove the bolt from the tip of the retaining nut.**

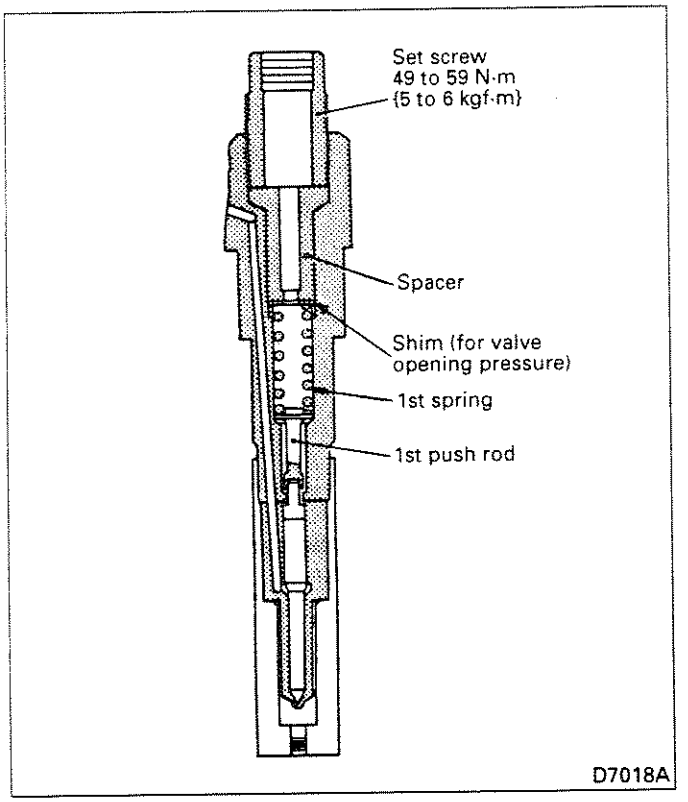

(b) Insert 1st push rod, 1st spring, valve opening pressure adjusting shim (first use about 1 mm thick one) and spacer to the nozzle holder.
Then tighten the set screw to specified torque.

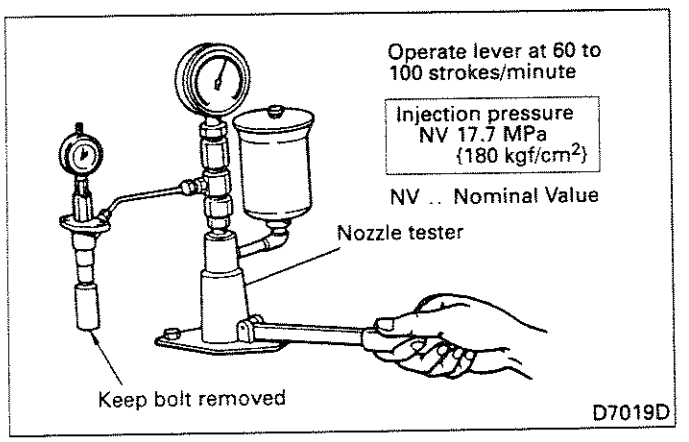

(c) Install the nozzle holder to nozzle tester and adjust the shim thickness for nominal injection pressure.
0.50 to 1.54 mm (in 0.02 mm steps)

NOTE:

1. **When using a shim, be sure to check its thickness by a micrometer.**
2. **Use same shim for prelift adjustment.**
3. **Use of a 0.02 mm thick shim changes the valve opening pressure by about 235 kPa {2.4 kgf/cm²}.**

(2) Selection of prelift adjusting shim

(a) "0" point adjustment of adjusting device

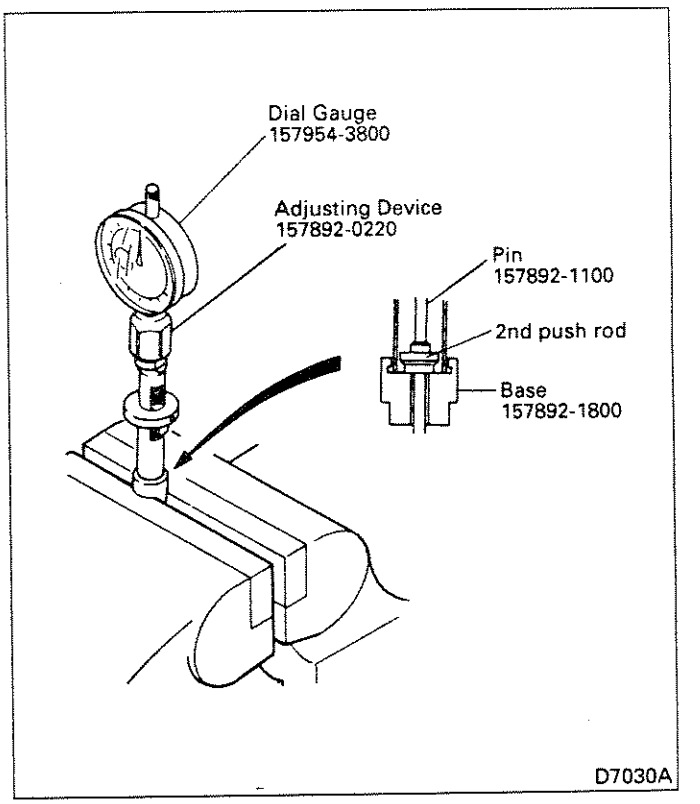

Install Dial Gauge (special tool) to Adjusting Device (special tool).
Install the 2nd push rod to Base (special tool) and install the assembly to a vice.
Set the pin and Adjusting Device as indicated in the above illustration and adjust "0" point of the Dial Gauge. Use a 60.5 mm long pin.

(b) Install the 2nd push rod to the nozzle holder.

NOTE:
Do not install the 2nd spring and prelift adjusting shim.

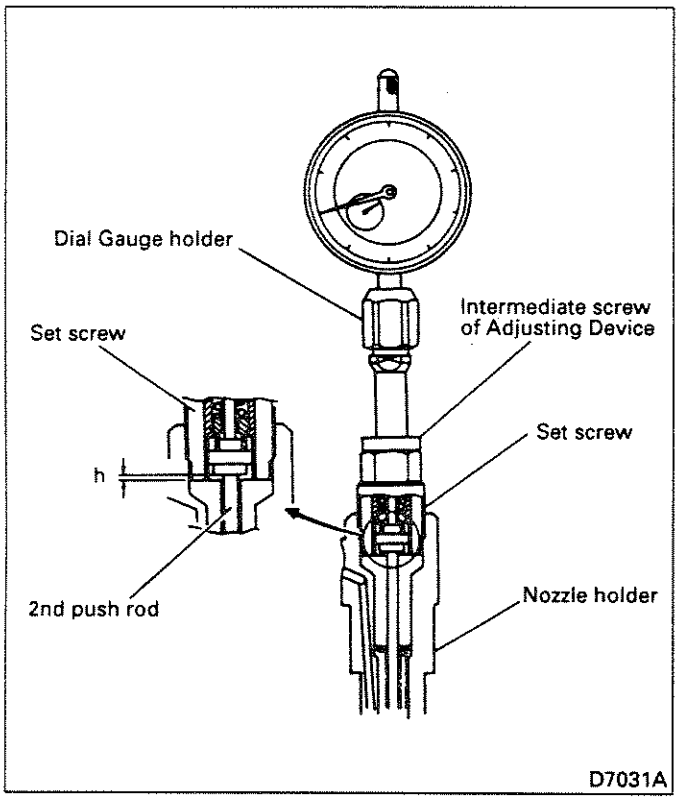

(c) Install the adjusting device to the set screw using its intermediate screw.
After installation, holding the Dial Gauge at its holder, move it up and down to check that the gauge operates smoothly.
Push down the gauge, holding its holder and read its lift h.

NOTE:
Read to 1/100 mm.

(d) Selection of prelift adjusting shim

$t = \ell + h$

where t: Shim thickness (measured)
ℓ: Prelift (0.10 ± 0.02 mm)
h: Dimension selected in step (c)

$T = t \pm 0.015$ mm

T: Thickness of shim to be used

Shim thickness: 0.75 to 1.50 mm (in 0.01 mm steps)

(e) Remove the Adjusting Device from the nozzle holder.

(3) Adjustment of 2-spring adjusting pressure (open pressure)

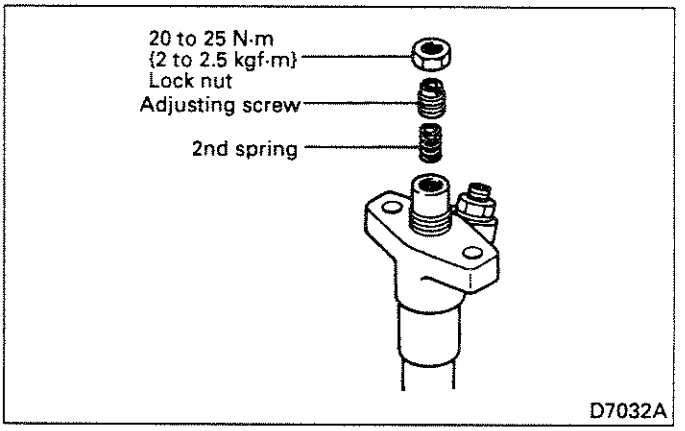

Install the 2nd spring, adjusting screw and lock nut to the nozzle holder.

NOTE:
Do not install the prelift adjusting shim.

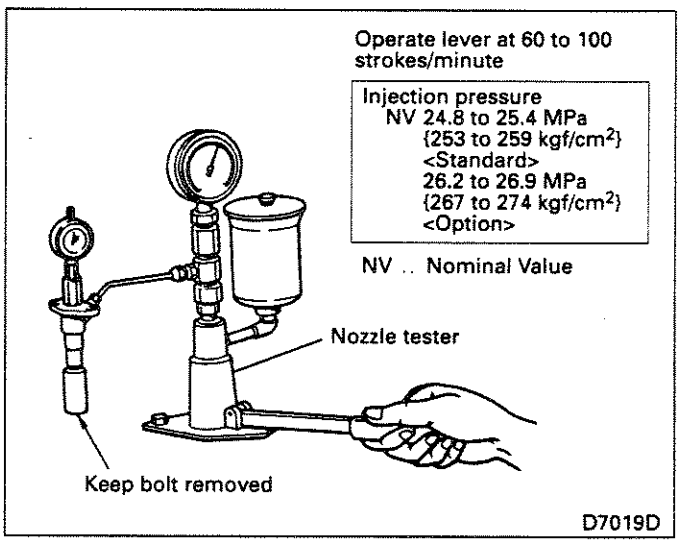

Using nozzle tester, adjust the adjusting screw for nominal injection pressure (open pressure).
After adjustment, tighten the lock nut to specified torque.

(4) Checking full lift of needle valve

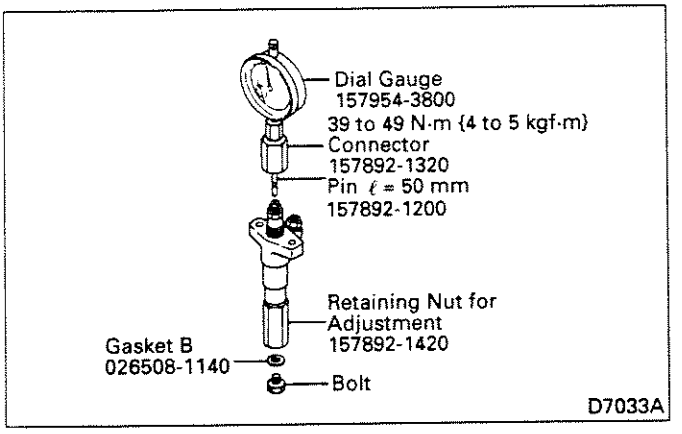

(a) Install the special tools indicated in above illustration and set "0" point of the Dial Gauge.

(b) Install the nozzle to the nozzle tester and operate the tester lever to bleed the inside of the retaining nut.
Also check for fuel leaks.

(c) Operate the tester lever to increase the pressure to about 34.3 to 44.1 MPa {350 to 450 kgf/cm^2} so that the needle valve of the nozzle is fully lifted. Read this lift dimension "L" off the Dial Gauge.

(d) Remove the Dial Gauge, Connector and Pin (special tools).

(5) Installation of prelift shim

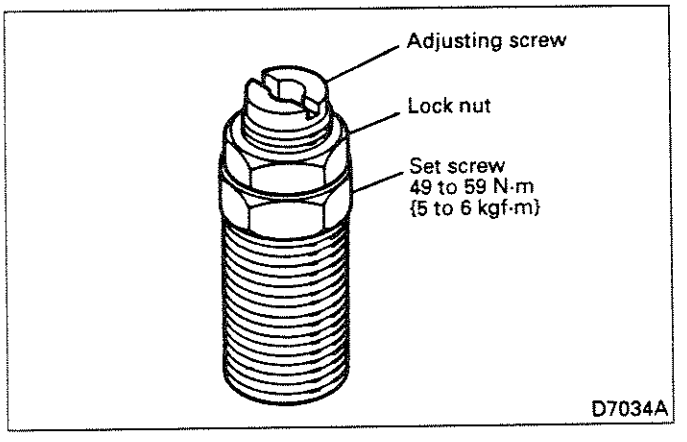

(a) Remove the set screw, lock nut and adjusting screw as an assembly from the nozzle holder.

NOTE:
Never loosen the lock nut as loosening it changes the 2-spring adjusting pressure.

(b) Install the prelift shim selected in Item (2) between the spacer and 2nd push rod.

(c) Install the 2nd push rod and 2nd spring and tighten the set screw, lock nut and adjusting screw as an assembly to specified torque.

(d) Check again that the needle valve full lift dimension "S" with the Dial Gauge by the procedures described in Item (4).

(6) Checking prelift

Check the prelift based on dimension "L" measured in Item (4) and dimension "S" measured in Item (5).

$L - S = \Delta \ell$

where $\ell - 0.02$ mm $\leqq \Delta \ell \leqq \ell + 0.02$ mm

$\Delta \ell$: Prelift (measured)
ℓ: Prelift (0.1 mm)
L: Needle valve full lift dimension (measured)
S: Needle valve lift dimension (measured) with prelift subtracted

If $\Delta \ell$ is outside of specified dimension $\ell \pm 0.02$ mm, replace the prelift adjusting shim as described in (5) and repeat steps (4) and (5) so that $\Delta \ell$ will fall within $\ell \pm 0.02$ mm.
Select thickness t' of shim to be used as follows.

$t' = t + (\ell - \Delta \ell)$

$T = t' \pm 0.015$ mm

where t: Thickness of existing shim
t': Shim thickness
T: Thickness of shim to actually replace existing shim
ℓ: Prelift (0.1 mm)

(7) Checking allowance of 2-spring regulated pressure (cover pressure)

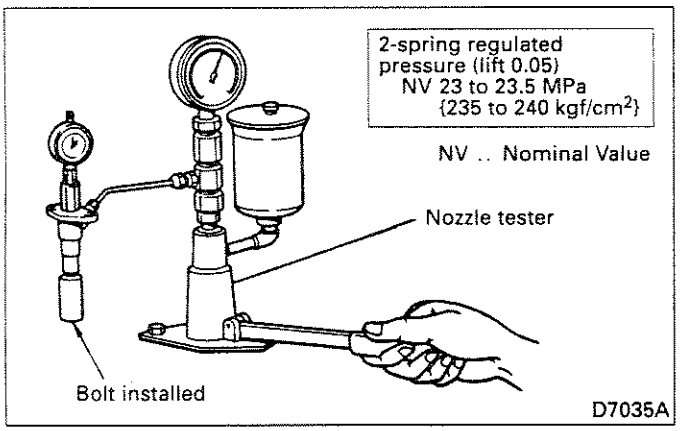

(a) After checking the prelift in Item (6), increase the pressure again to about 34.3 to 44.1 MPa {350 to 450 kgf/cm²} so that the needle valve of the nozzle is fully lifted.

NOTE:
Retaining Nut for Adjustment (special tool) must have a bolt fitted at its tip.

(b) When the nozzle tester lever operation is stopped with the nozzle needle valve fully lifted, the pressure will start to drop and the needle valve will go down.

(c) At the moment the nozzle lift has dropped to 0.05 mm, read the pressure gauge indication.

(d) If the 2-spring regulated pressure (open pressure) is out of specification, adjust the 2-spring regulated pressure in accordance with Item (3).

NOTE:
Adjust without installing prelift shim.

(e) Remove special tools.

(8) Inspection

(a) Tighten the retaining nut and cap nut to specified torque.

NOTE:
1. **Make sure that the knock pin has seated completely before tightening the retaining nut.**
2. **Tighten the retaining nut finger tight and then tighten to specified torque using a torque wrench.**

(b) Spray condition

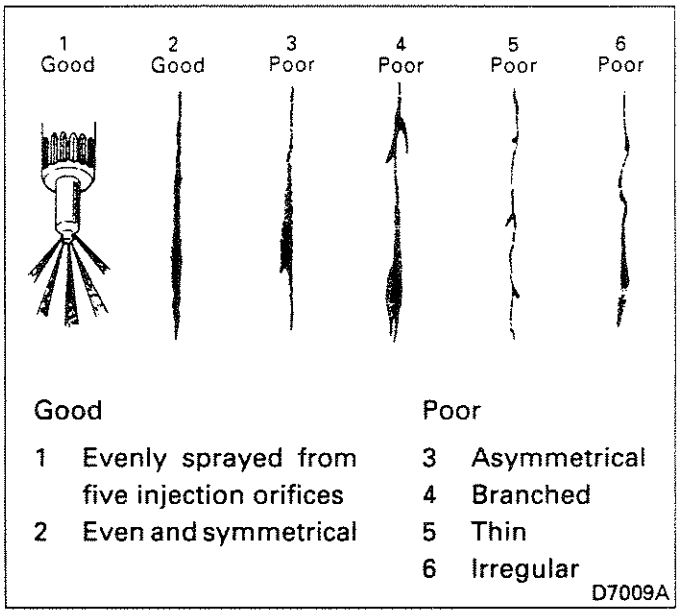

When adjusting the pressure with a nozzle tester, check also for clogged injection orifices, spray condition, and fuel leaks from the orifices. Replace the nozzle if defective.

(c) Fuel tightness test

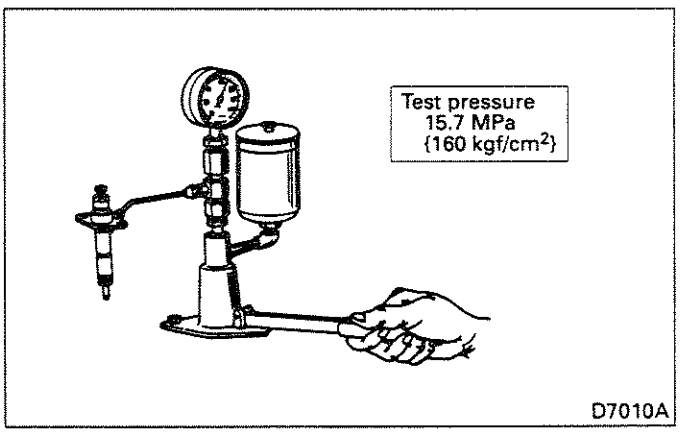

Install a nozzle that has been adjusted to specified injection start pressure to the nozzle tester. Slowly increase the pressure to the test pressure and keeping this condition, check for fuel leaks from the bottom of the nozzle. The nozzle is functioning normally if there is no leak.

5.13.6 Reassembly and adjustment <2-spring nozzle: identification mark "2D">

The adjustment should be performed during reassembly as described below. The prelift should be adjusted in 1/100 mm unit. Therefore the parts must be cleaned with the clear cleaning fluid to remove dust and foreign materials completely. For the adjustment, following special tools are required.

Tool name and shape	Part No. (Zexel product No.)	Application
Adjusting Device	157892-4920	
*1 Adjusting Device	157892-4420	
*2 Holder	157892-4400	
*2 Nut	157892-1000	Securing Dial Gauge
*1 Dial Gauge	157954-3800	
*1 Pin	157892-4700	
*1 Retaining Nut for Adjustment	157892-4020	
*3 Retaining Nut for Adjustment	157892-4000	
*3 Gasket	026508-1140	
*3 Plug	157892-1600	
*1 Gasket	157892-1500	
Plate	157944-9520	Securing nozzle holder
Special Wrench (SW19)	157914-2800	Removal and installation of retaining nut
Special Wrench (SW22)	157914-0500	Removal and installation of Retaining Nut for Adjustment

Items marked "*1" are parts of Adjusting Device 157892-4920.
Items marked "*2" are parts of Adjusting Device 157892-4420.
Items marked "*3" are parts of Retaining Nut for Adjustment 157892-4020.

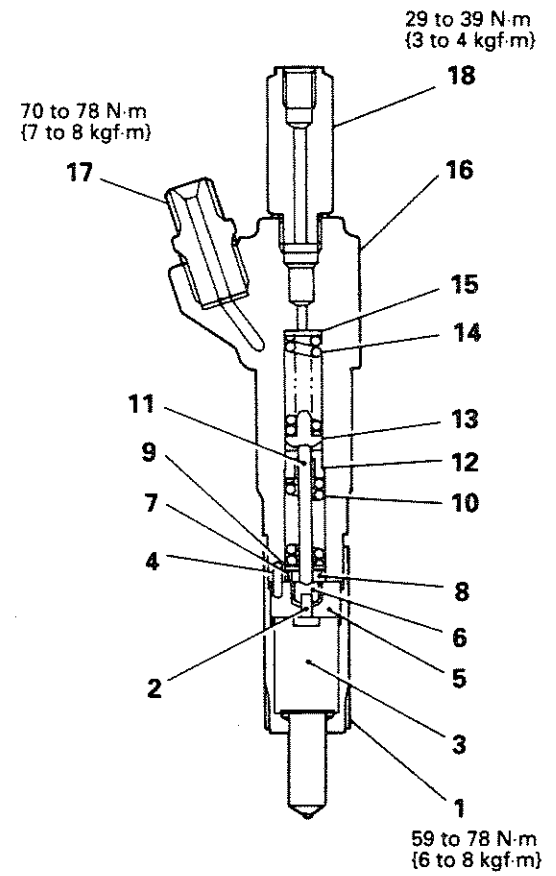

For reassembly, reverse the order of disassembly.

NOTE:
Do not touch the needle valve's sliding surfaces.

11937

During reassembly, make adjustments and checks in the following sequence:

(1) Adjust the No. 1 valve's opening pressure
↓
(2) Check the needle valve's total lift
↓
(3) Check the prelift amount
↓
(4) Check the No. 2 valve's opening pressure
↓
(5) Adjust the No. 2 valve's opening pressure
↓
(6) Replace the retaining nut
↓
(7) Make an overall inspection

Reassembly and Adjustment Procedure

(1) Reassembly

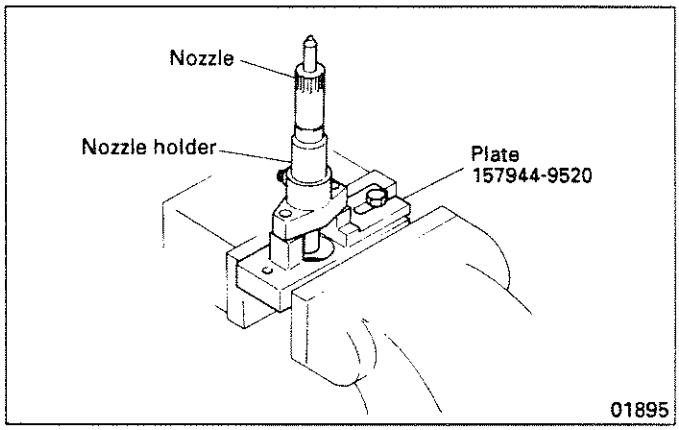

(a) Secure the Plate (special tool) in a vise, then mount the nozzle holder on the Plate. Carry out reassembly in the opposite of the disassembly sequence.

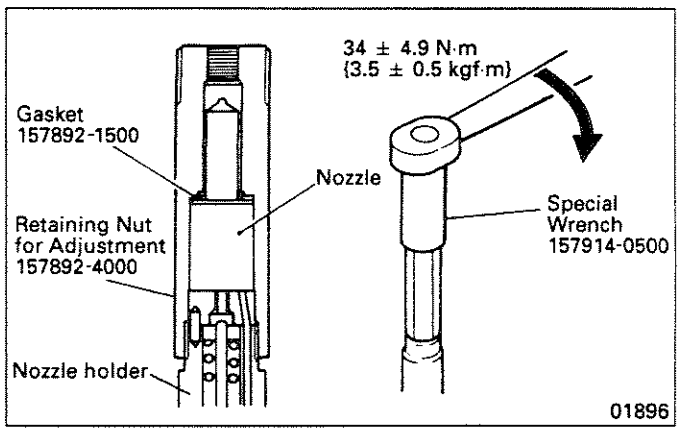

(b) Fit the Gasket (special tool) onto the nozzle. Then, secure the nozzle on the nozzle holder using the Retaining Nut for Adjustment (special tool). Turn the Retaining Nut for Adjustment as far as possible by hand, then tighten it to the specified torque using the Special Wrench (special tool).

(2) Adjusting No. 1 valve opening pressure

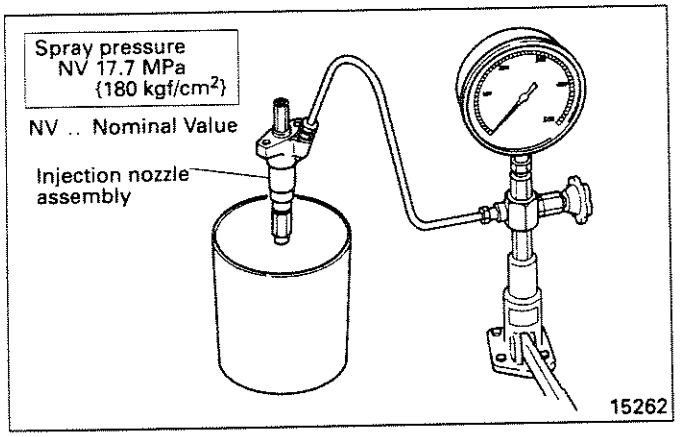

(a) Fit the injection nozzle assembly onto the tester and measure the valve opening pressure.

NOTE:
Do not touch the spray that comes out of the nozzle.

(b) If the spray pressure is out of specification, adjust it using No. 1 valve opening pressure adjustment shim. (This shim has an outside diameter of 8.9 mm.)
A 0.02 mm change in shim thickness causes a 235 kPa {2.4 kgf/cm²} change in valve opening pressure.

Shim thickness:
0.40, 0.50, 0.52, 0.54, 0.56, 0.58, 0.60, 0.70

(3) Checking needle valve total lift

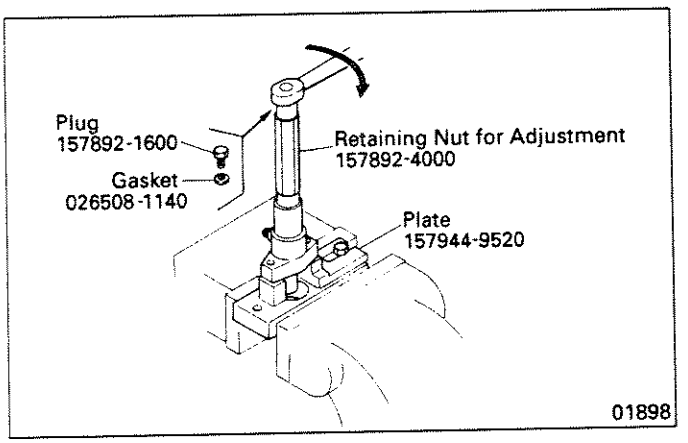

(a) Fit the Gasket and Plug (special tools) onto the Retaining Nut for Adjustment (special tool).

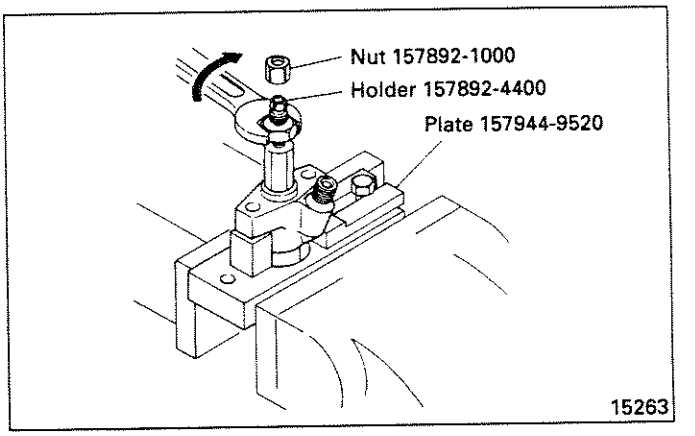

(b) Mount the injection nozzle assembly upside-down on the Plate (special tool). Then, fit the Holder and Nut (special tools).

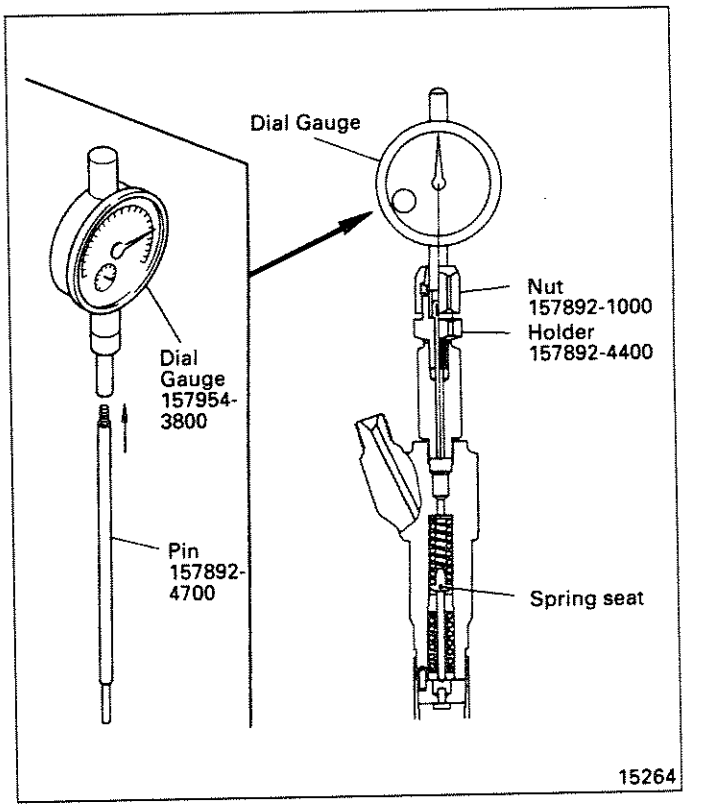

(c) Fit the Pin (special tool) into the Dial Gauge (special tool).

(d) Fit the Dial Gauge (special tool) onto the injection nozzle assembly and secure it with the Nut (special tool) such that the Pin (special tool) is touching the top surface of the No. 1 spring seat.

NOTE:

1. **Secure the Dial Gauge such that a stroke of approximately 1.2 mm can be measured.**
2. **Do not overtighten the Nut. If the Nut is too tight, the Dial Gauge shaft will stick in one position.**

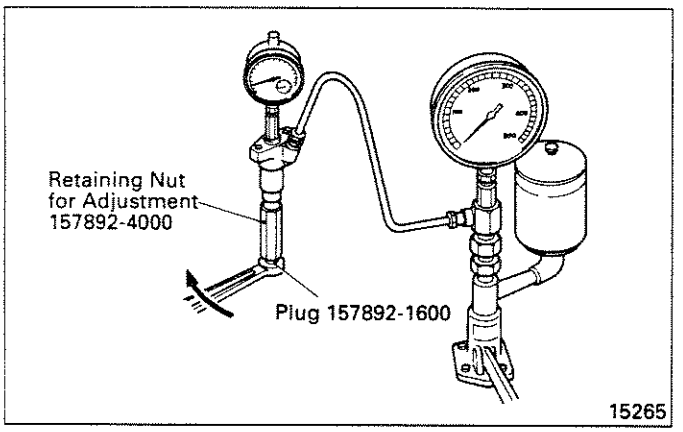

(e) Fit the injection nozzle assembly onto the Nozzle Tester, then zero the Dial Gauge.
Loosen the Plug (special tool) and operate the Nozzle Tester. Bleed the Retaining Nut for Adjustment, and check for fuel leaks at the same time. After fully bleeding the Retaining Nut for Adjustment, securely tighten the Plug.

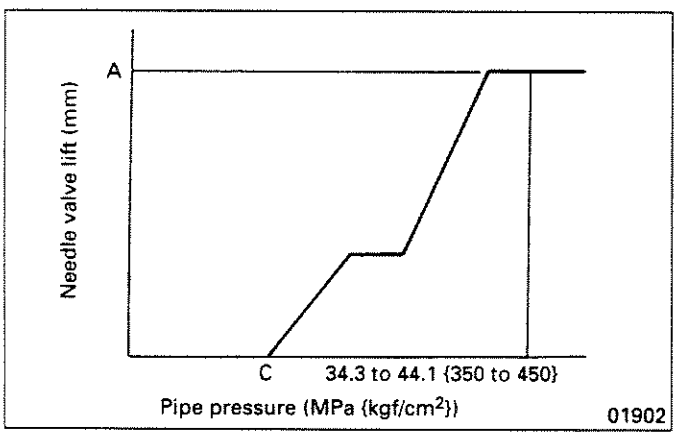

(f) Operate the Nozzle Tester. When the pipe pressure is raised to 34.3 to 44.1 MPa {350 to 450 kgf/cm^2}, the needle valve should lift completely. When this happens, make a note of the total lift measurement. In the graph,

A: Needle valve total lift amount
C: No. 1 valve opening pressure

NOTE:

This check is necessary to check for abnormal wear on the nozzle seat.

(4) Checking prelift

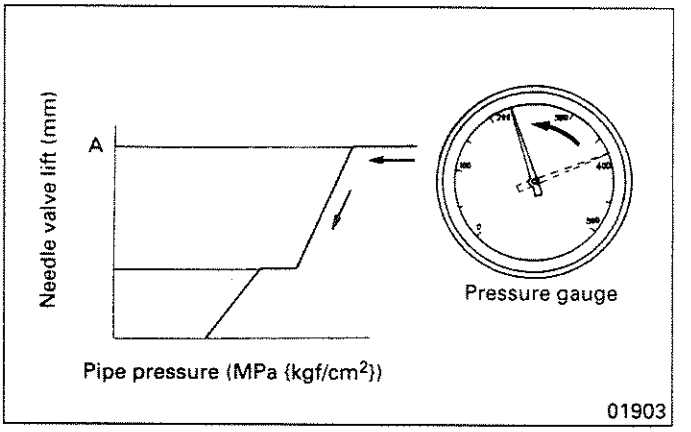

(a) Once the needle valve is in its fully lifted position, the pipe pressure will start to drop if the Nozzle Tester handle is not moved. The needle valve lift measurement (as shown by the Dial Gauge) will drop concomitantly. In the graph,

A: Needle valve total lift amount

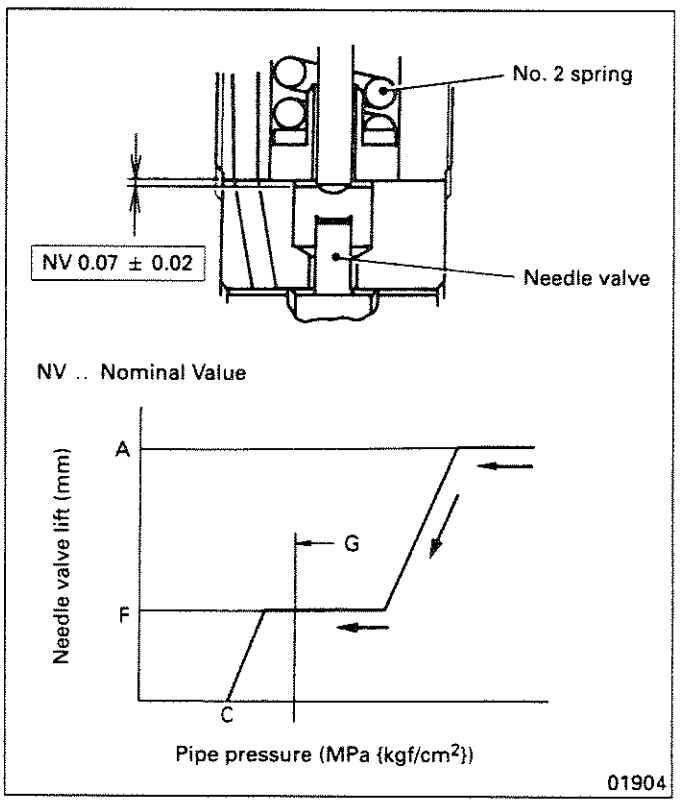

(b) Read the Dial Gauge indication when the No. 2 spring stops acting and the needle valve stops dropping. This point is labeled "F" in the above graph. Confirm that the reading conforms with the specified nominal value.

The prelift measurement point (labeled "G" in the graph) corresponds to C + approx. 980 kPa {10 kgf/cm²}, where "C" is the No. 1 valve opening pressure.

In the graph,

A: Needle valve total lift amount
C: No. 1 spring opening pressure
F: Prelift
G: Prelift measurement point

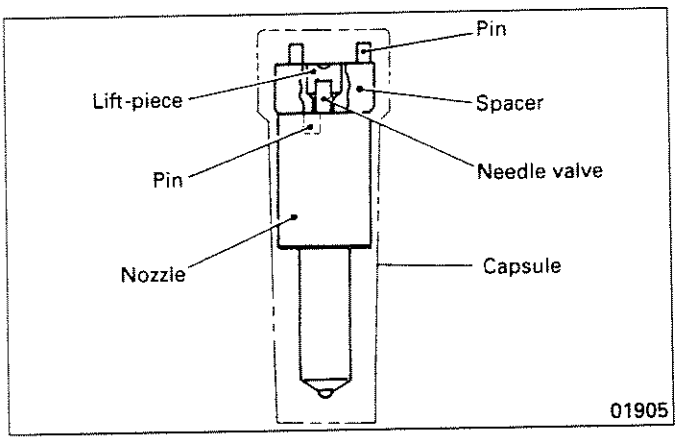

(c) If the prelift measurement is out of specification, replace the pin, lift-piece, spacer, nozzle, and needle valve with the Nozzle Service Kit.

(5) Checking No. 2 valve opening pressure

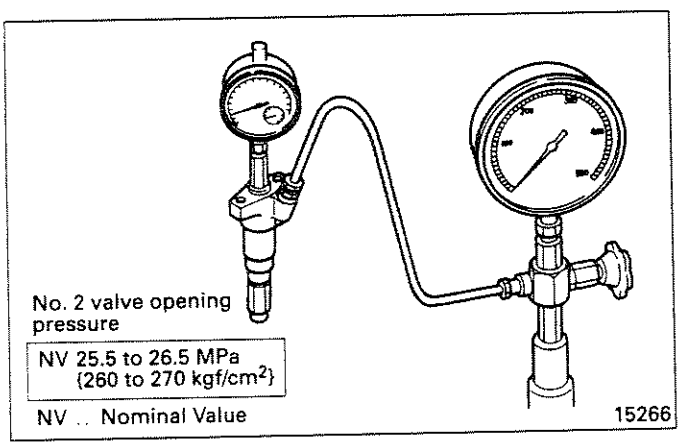

(a) After checking the prelift, operate the Nozzle Tester and raise the pipe pressure to 34.3 to 44.1 MPa {350 to 450 kgf/cm²} such that the needle valve lifts fully. If the Nozzle Tester handle is not moved, the pipe pressure will drop. The needle valve lift measurement (shown by the Dial Gauge) will drop concomitantly.

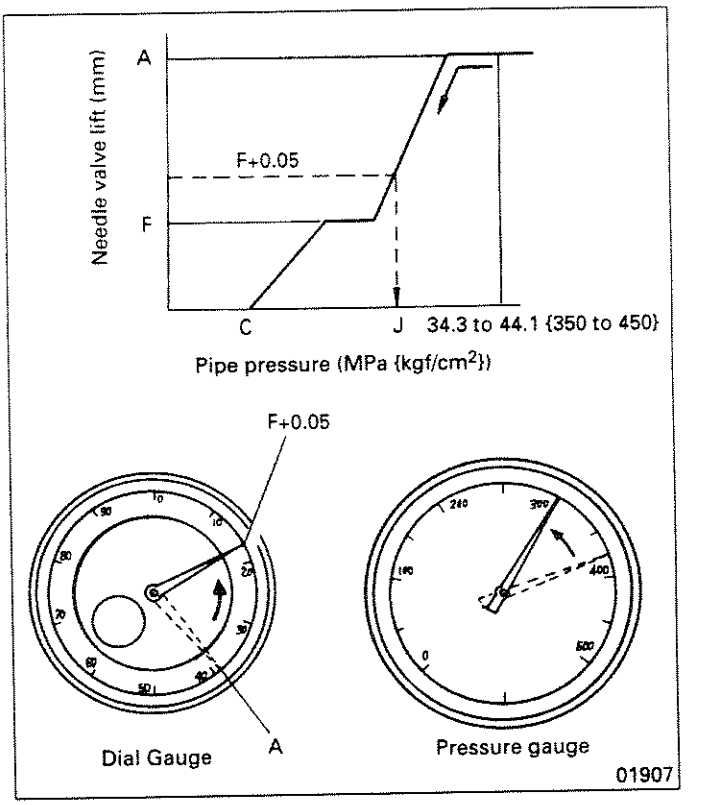

(b) Read the pressure gauge indication at the instant when the Dial Gauge indicates the specified nominal needle valve lift (normally prelift F + 0.05 mm).

In the graph,

A: Needle valve total lift amount
C: No. 1 valve opening pressure
F: Prelift
J: No. 2 valve opening pressure

(6) Adjusting No. 2 valve opening pressure

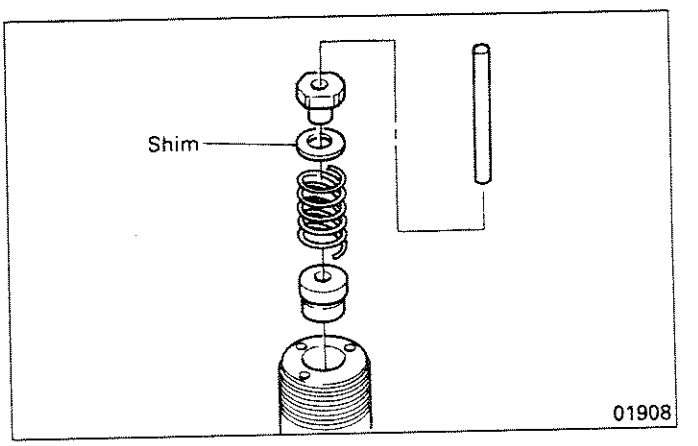

If the No. 2 valve opening pressure is out of specification, disassemble the nozzle mounting side of the injection nozzle assembly and change the No. 2 valve

opening pressure adjustment shim. (This shim has an outside diameter of 9.9 mm.)
Shims are available in the following thicknesses: 0.40, 0.50, 0.52, 0.54, 0.56, 0.58, 0.60, and 0.70 mm. A 0.02 mm change in shim thickness causes a change in valve opening pressure of 196 kPa {2 kgf/cm^2}.

NOTE:

1. **Do not touch the spray that comes out of the nozzle.**
2. **Changing the No. 1 valve opening pressure causes the No. 2 valve opening pressure to also change.**

(7) Replacing retaining nut

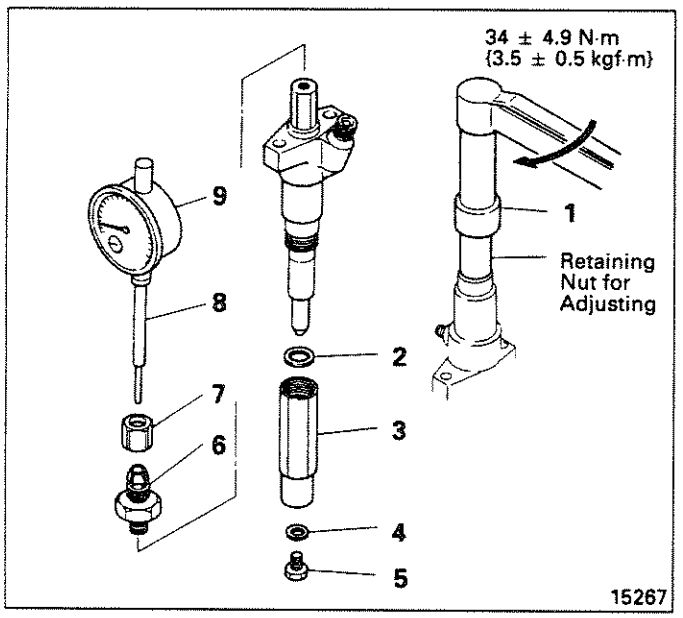

Remove the Dial Gauge, Pin, Nut, and Holder. Then, take off the Plug, the Gasket, and the Retaining Nut for Adjustment and its Gasket. Fit the regular retaining nut and tighten it to the specified torque using the Special Wrench (special tool).

Special tools:

1.	Special Wrench	(157914-0500)
2.	Gasket	(157892-1500)
3.	Retaining Nut for Adjustment	(157892-4000)
4.	Gasket	(026508-1140)
5.	Plug	(157892-1600)
6.	Holder	(157892-4400)
7.	Nut	(157892-1000)
8.	Pin	(157892-4700)
9.	Dial Gauge	(157954-3800)

(8) Inspection

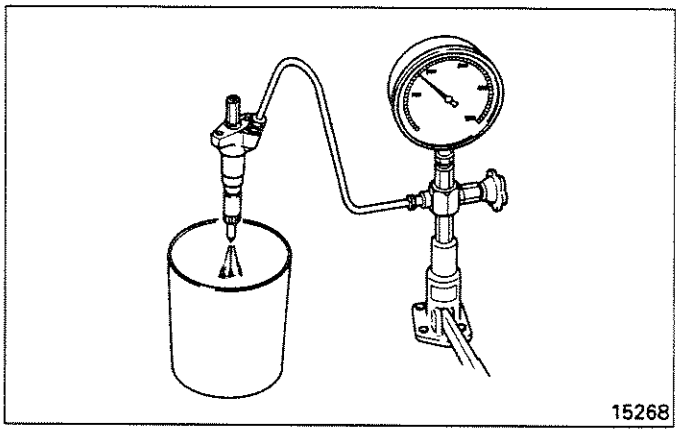

Fit the injection nozzle assembly onto the Nozzle Tester. Check the No. 1 valve opening pressure, the spray shape, and the oil-tightness of the seat. Check also that there are no leaks.

NOTE:

1. **If the No. 1 valve opening pressure does not conform to its specified nominal value, go through the adjustment procedure again from step (1).**
2. **Do not touch the spray that comes out of the nozzle.**

5.14 Hydraulic Governor (RHD6-type for 8DC9) Inspection and Adjustment

(1) Bleeding hydraulic governor

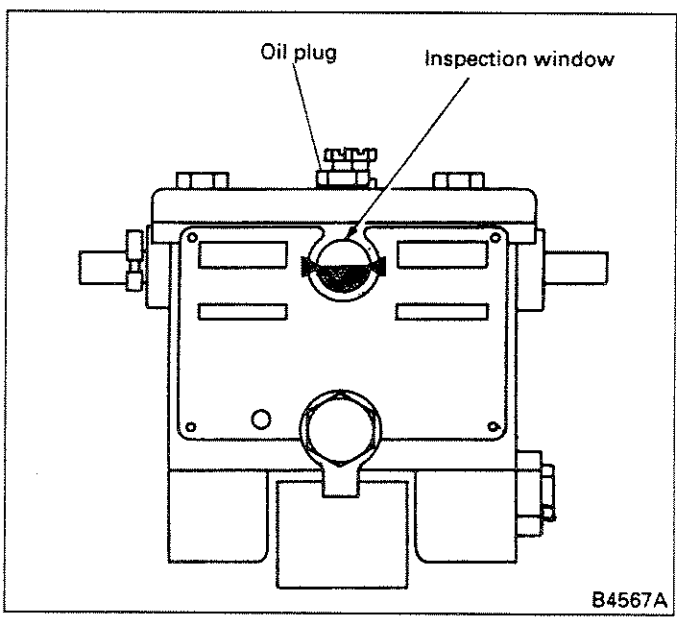

(a) Before starting the engine, remove the oil plug from the governor's top cover and pour in ATF up to the inspection window's middle mark.

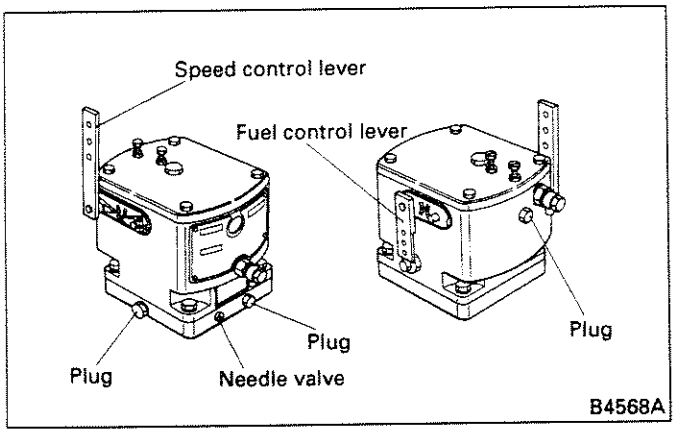

(b) Loosen the three plugs, then turn the needle valve three turns back from its fully closed position.

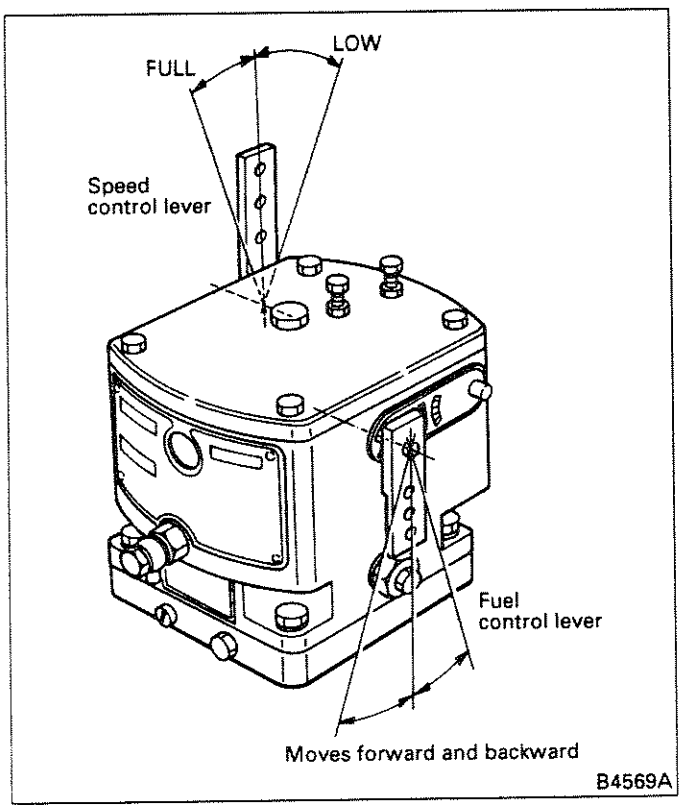

(c) Push the speed control lever to "FULL" side or "LOW" side. Then, move the fuel control lever on the power piston side. Repeat this procedure several times with the speed control lever in both the "FULL" and "LOW" positions to fully bleed the hydraulic governor.

NOTE:

1. **Bleed the hydraulic governor with the engine coolant at a temperature of approximately 75°C.**
2. **After bleeding the hydraulic governor, top up the ATF until it reaches the middle of the inspection window.**
3. **After starting the engine, the needle valve must be tightened until hunting stops. Set the needle valve as loosely as possible without hunting taking place.**
4. **All air in the hydraulic governor must be bled out. If any air remains inside, hunting will not stop after the engine is started.**

(2) Adjusting speed alteration rate

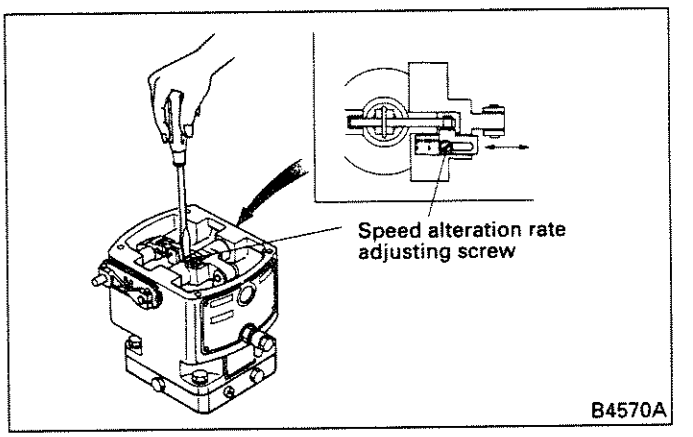

Remove the governor's top cover and set the speed alteration rate scale to 9 or 10.

(3) Rod adjustment

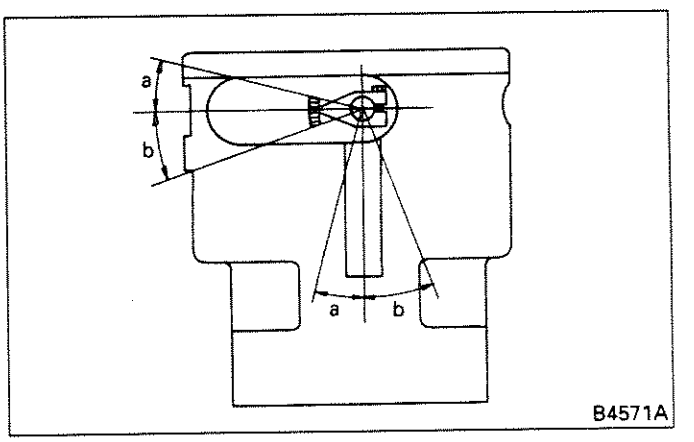

(a) With the hydraulic governor standing alone, check the stroke of the fuel control lever (the lever's maximum movable distance). Confirm that there is no discrepancy between the scale and needle.

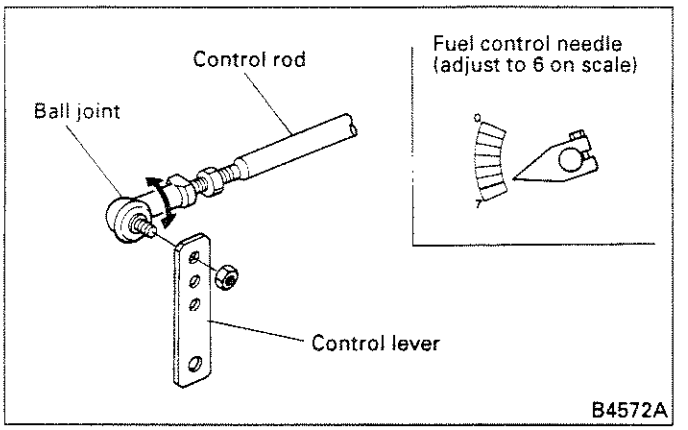

(b) Set the injection-pump-side governor's fuel control lever to its full-load position. Connect the control rod to the hydraulic governor's fuel control lever such that hydraulic governor's fuel needle points to 6 on the scale.
To make adjustments, remove the ball joint from the control lever, loosen its lock nut, then rotate the ball joint to alter the control rod's effective length.

(4) Adjusting LOW idle

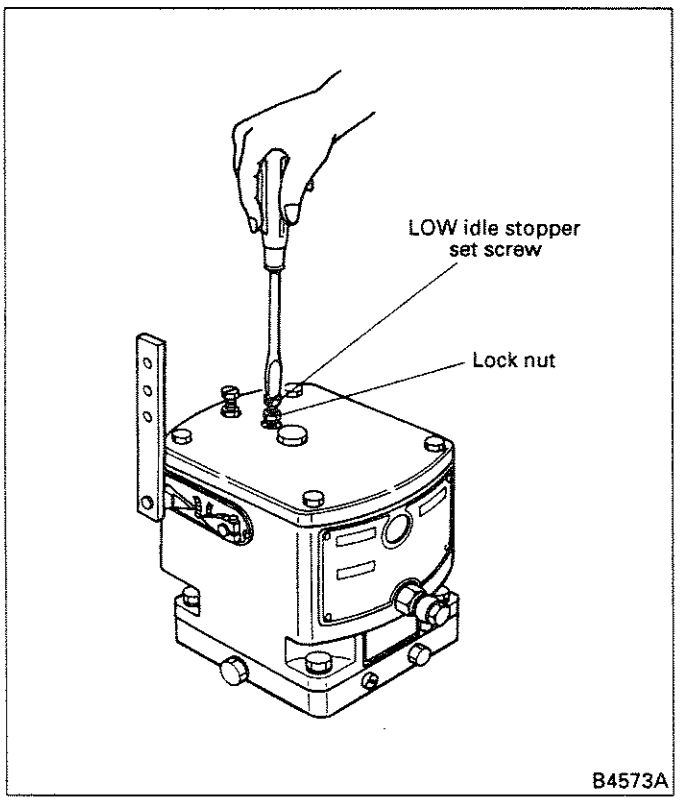

Turn the LOW idle stopper set screw (on top of the hydraulic governor) such that the following conditions are satisfied:

Injection-pump-side governor's governor lever position	Hydraulic governor's speed control lever position	Torque converter speed
LOW	LOW	600 ± 50 rpm
HIGH	LOW	600 ± 50 rpm
LOW	HIGH	700 ± 50 rpm

(5) Adjusting HIGH idle

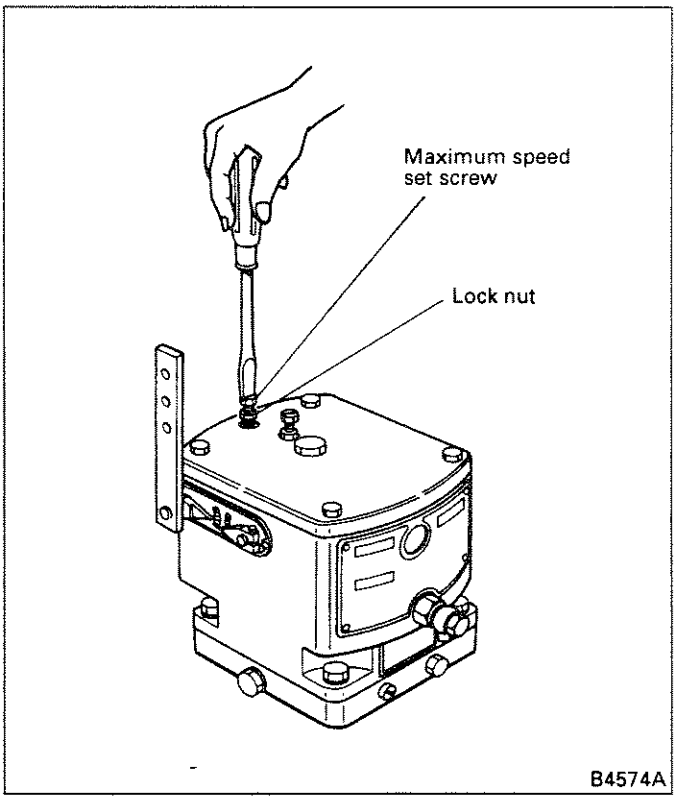

Set the injection-pump-side governor's governor lever to its HIGH idle position. Turn the maximum speed set screw such that the torque converter runs at a speed of 2,000 to 2,050 rpm.

(6) Checking for hunting

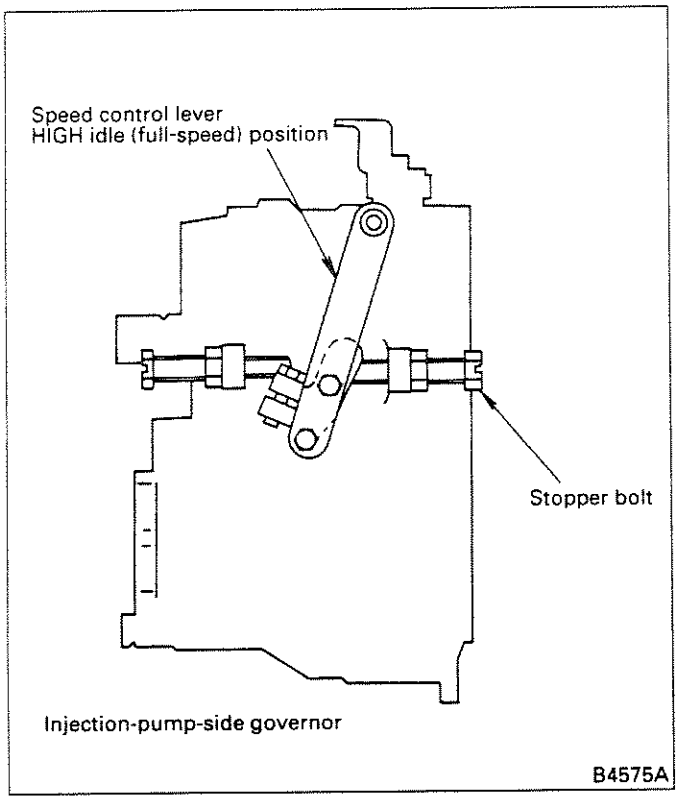

(a) Set the injection-pump-side governor's governor lever to its HIGH idle position. Gradually raise the hydraulic governor's speed control lever and check that no hunting occurs over the entire range.

(b) Set the hydraulic governor's speed control lever to its HIGH idle position. Gradually raise the injection-pump-side governor's governor lever and check that no hunting occurs over the entire range.

5.15 Fuel Filter

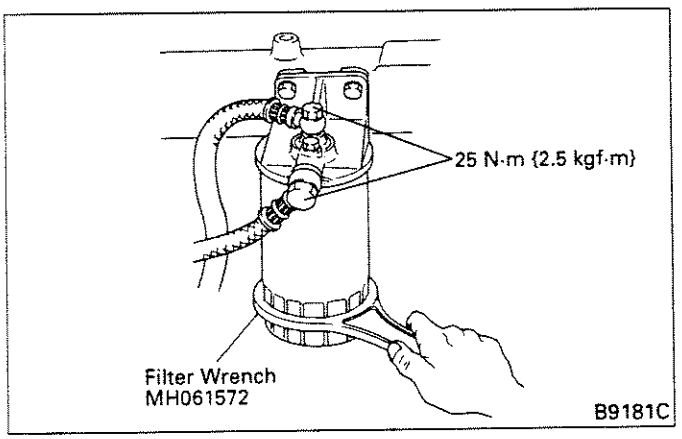

The element can be removed easily using the Filter Wrench (special tool).

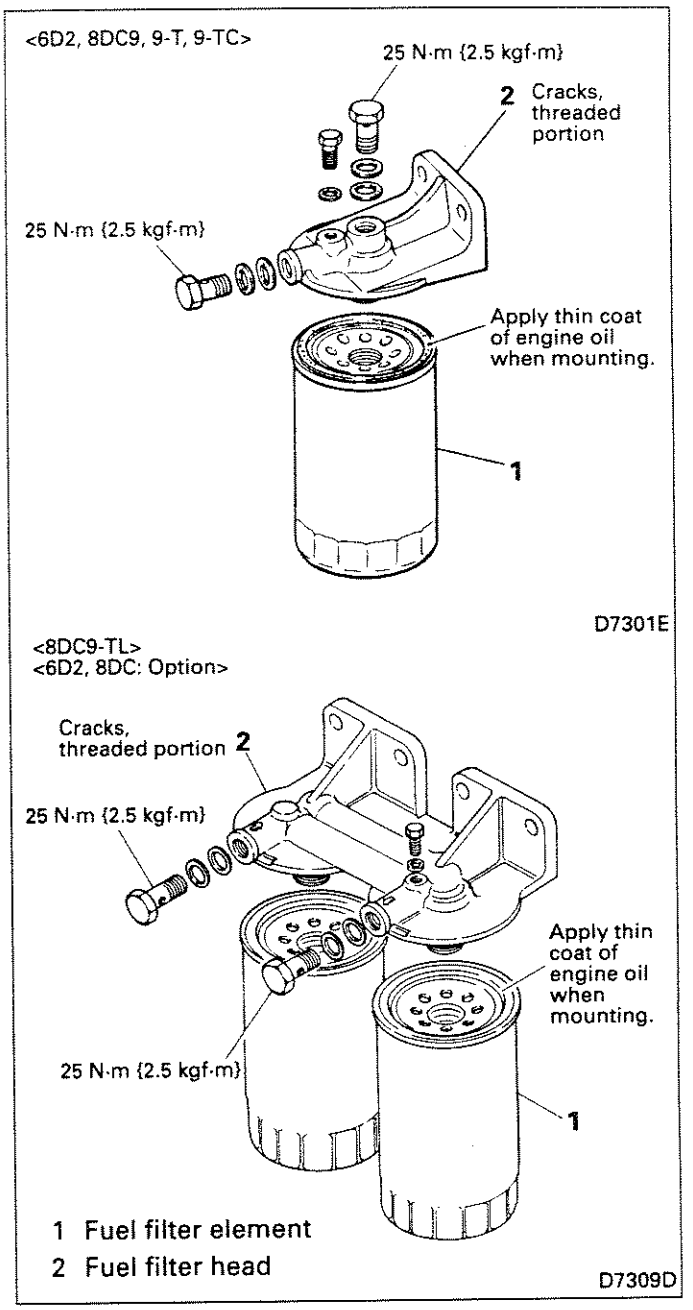

NOTE:

1. **When removing the element, check for the gasket left behind on the head side.**
2. **To mount, apply a thin coat of engine oil to the gasket, and then secure the element by tightening 3/4 to 1 turn after the gasket comes in contact with the fuel filter head.**
3. **After installation, bleed the fuel system.**
4. **After bleeding the air, start the engine and check for fuel leaks.**

5.16 Water Separator

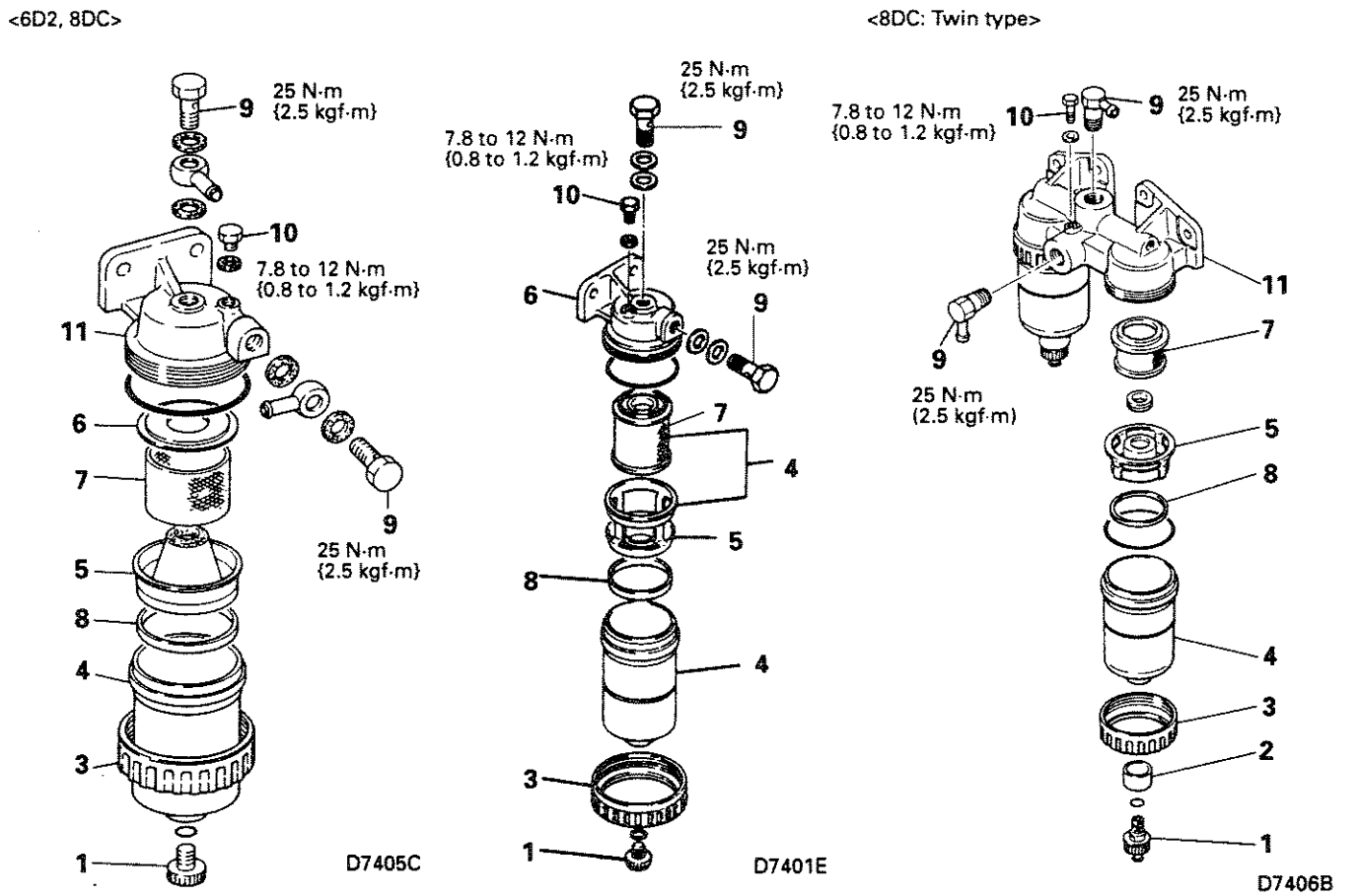

1 Drain plug
2 Drain cup (twin type only)
3 Ring nut
4 Case
5 Baffle plate
6 Isolation plate
7 Screen assembly
8 Water level ring
9 Eyebolt
10 Air plug
11 Cover

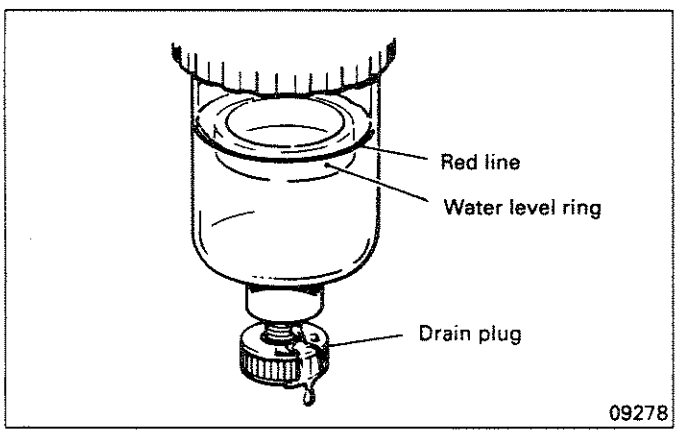

If the red water level ring in the translucent case rises to the level of the red line marked on the outer circumference of the case, immediately loosen the drain plug to discharge water.

It is not necessary to completely remove the drain plug, as water is discharged gradually through the groove of the loosened plug.

NOTE:

After draining, tighten firmly the drain plug before bleeding the fuel system.

6. TROUBLESHOOTING

Symptom	Probable cause	Remedy	Ref. group
Engine will not start	Defective feed pump • Loaded gauze filter	Clean	
	• Check valve inoperative	Replace	
	• Seized or worn piston	Replace	
	• Seized push rod	Replace	
	• Worn tappet	Replace	
	Defective injection pump • Seized or worn plunger	Replace	
	• Seized control rack or control rod	Replace	
	• Seized delivery valve	Replace	
	• Worn tappet	Replace	
	• Worn camshaft	Replace	
	Defective injection nozzle • Seized needle valve	Replace	
	• Valve opening pressure too low	Adjust	
	• Clogged injection orifice	Clean	
	• Nozzle not air-tight	Correct or replace	
	Fuel tank empty	Supply fuel	
	Clogged fuel pipe or fuel leaks from connection	Correct or replace	
	Air or water trapped in fuel system	Bleed or replace	
	Loaded fuel filter	Replace	
Engine starts but soon stops	Clogged fuel filter	Correct or replace	
	Air or water trapped in fuel system	Bleed or replace	
	Defective feed pump	Check	
Engine knocks	Injection timing too advanced	Adjust	
	Defective injection nozzle • Valve opening pressure too high	Adjust	
	• Clogged injection orifice	Clean	
	• Nozzle not air-tight	Correct or replace	
	Low quality fuel in use	Replace	
Smoky engine exhaust and knocking	Defective injection pump • Incorrect injection timing	Adjust	
	• Worn plunger	Replace	
	• Defective valve seat	Replace	
	Low quality fuel in use	Replace	
	Defective injection nozzle • Valve opening pressure too low	Adjust	
	• Broken spring	Replace	
	• Clogged injection orifice	Clean	

Symptom	Probable cause	Remedy	Ref. group
Unstable engine output	Defective injection pump		
	• Insufficient plunger sliding stroke	Replace	
	• Broken plunger spring	Replace	
	• Poor control rod or control rack sliding	Correct	
	• Worn tappet, poor sliding	Replace	
	• Broken delivery valve spring	Replace	
	• Poor tightness due to loose delivery valve holder	Correct	
	• Delivery valve not functioning properly	Replace	
	Defective injection nozzle		
	• Poor sliding of needle valve	Replace	
	• Broken spring	Replace	
	• Incorrect valve opening pressure	Adjust	
	Defective feed pump		
	• Check valve not functioning properly	Replace	
	• Worn piston	Replace	
	Air or water trapped in fuel system	Bleed or replace	
	Loaded fuel filter	Replace	
	Incorrect injection timing	Adjust	
	Control lever not in contact with full-speed set bolt	Adjust	
Insufficient engine output	Defective injection nozzle		
	• Nozzle not air-tight	Correct or replace	
	• Broken spring	Replace	
	• Clogged injection orifice	Clean	
	Defective injection pump		
	• Worn plunger	Replace	
	• Broken delivery valve	Replace	
	• Defective delivery valve seat	Replace	
	• Poor tightness due to loose delivery valve holder	Correct	
	Defective governor		
	• Timing control is performed at low speed due to weak governor spring	Adjust	
	• Faulty full-load stopper position	Adjust	
	• Adjusting lever (or load control lever) incorrectly adjusted	Adjust	
	Poorly adjusted injection timing	Adjust	
	Insufficient advance angle of automatic timer	Adjust	
	Poor quality fuel in use	Replace	
Engine not reaching max. speed	Defective governor		
	• Governor spring tension too weak	Adjust	
	• Incorrect adjusting lever (or load control lever) position	Adjust	
	Defective injection nozzle		
	• Clogged injection orifice	Clean	
	• Nozzle not air-tight	Correct or replace	
	• Valve opening pressure too low	Adjust	

Symptom	Probable cause	Remedy	Ref. group
Engine max. speed too high	Poor sliding of injection pump control rod or control rack	Correct	
	Defective governor • Poorly adjusted speed control lever	Adjust	
	• Flyweight not functioning effectively	Correct	
Unstable engine idling	Defective injection pump • Seized, binding or worn plunger	Replace	
	• Loose control pinion	Correct	
	• Plunger spring not seating correctly	Replace	
	• Delivery valve holder too tight	Correct	
	• Uneven injection amount to cylinders	Adjust	
	• Broken plunger spring	Replace	
	• Air or water trapped in fuel system	Bleed or replace	
	Defective governor • Idling spring tension too weak	Adjust	
	• Bent link	Correct	
	• Large friction or play of link	Replace	
	• Loose round nut	Correct	
	• Incorrectly adjusted idling stopper bolt	Adjust	
	Defective feed pump • Defective check valve	Replace	
	• Worn piston	Replace	
	• Loaded gauze filter	Clean	
	Loaded fuel filter	Replace	
	Incorrect injection timing	Adjust	
	Defective automatic timer	Correct	
	Defective injection nozzle • Clogged injection orifice	Clean	
	• Deteriorated spring	Replace	
	• Nozzle not air-tight	Correct or replace	
Engine cannot be stopped	Broken or stretched engine stop cable	Replace	
	Poorly adjusted engine stop cable	Adjust	
	Damaged governor stop mechanism	Replace	
Fuel supply failure	Cracked fuel hose, pipe	Replace	
	Leaky fuel tank	Replace	

COOLING

CONTENTS

1. GENERAL 2
2. SPECIFICATIONS 7
3. SERVICE STANDARDS 8
3.1 Service Standards Table 8
3.2 Tightening Torque Table 8
4. SPECIAL TOOL 9
5. SERVICE PROCEDURE 10
5.1 Removal and Installation of Fan Shroud 10
5.2 Removal and Installation of Cooling Fan 10
5.3 Water Pump <6D2> 11
5.3.1 Removal and installation 11
5.3.2 Disassembly and inspection 11
5.3.3 Reassembly 14
5.4 Water Pump <8DC> 15
5.4.1 Removal and installation 15
5.4.2 Disassembly and inspection 16
5.4.3 Reassembly 19
5.5 Thermostat 21
5.5.1 Removal and installation 21
5.5.2 Inspection 22
5.6 Fan Drive 23
5.6.1 Disassembly and inspection 23
5.6.2 Reassembly 24
5.7 Tension Pulley 25
5.7.1 Disassembly and inspection 25
5.7.2 Reassembly 26
5.8 Inspection of Auto Cool Fan Coupling 26
5.9 Inspection of Radiator 27
5.10 V-belt Tension 29
5.10.1 Inspection 29
5.10.2 Adjustment 30
5.11 Cleaning of Cooling System 32
5.12 Gas Leak Test 34
5.13 Bleeding the Cooling System 34
6. TROUBLESHOOTING 35

1. GENERAL

The cooling system is of the water-cooling forced circulation type consisting of a radiator, water pump, thermostat, and related parts.

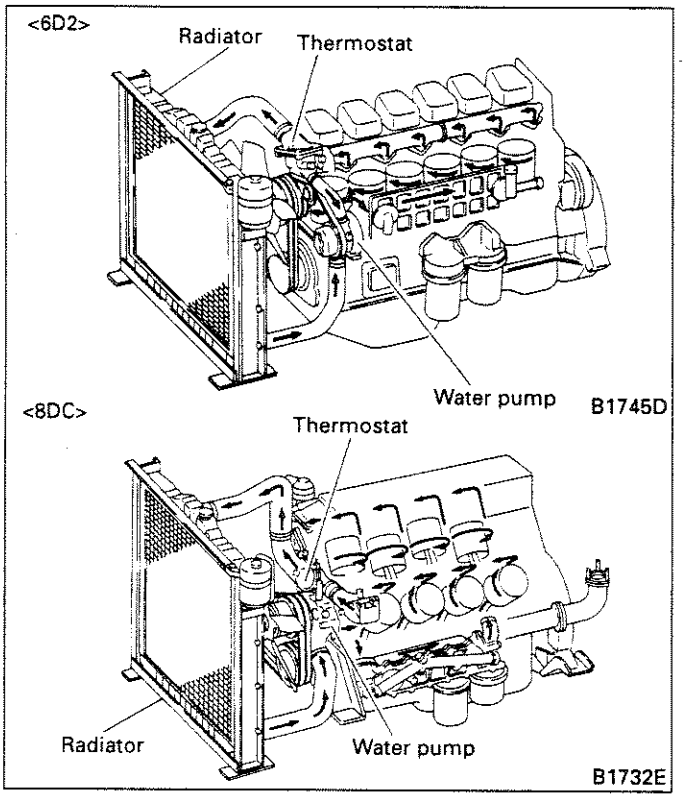

(1) Water pump

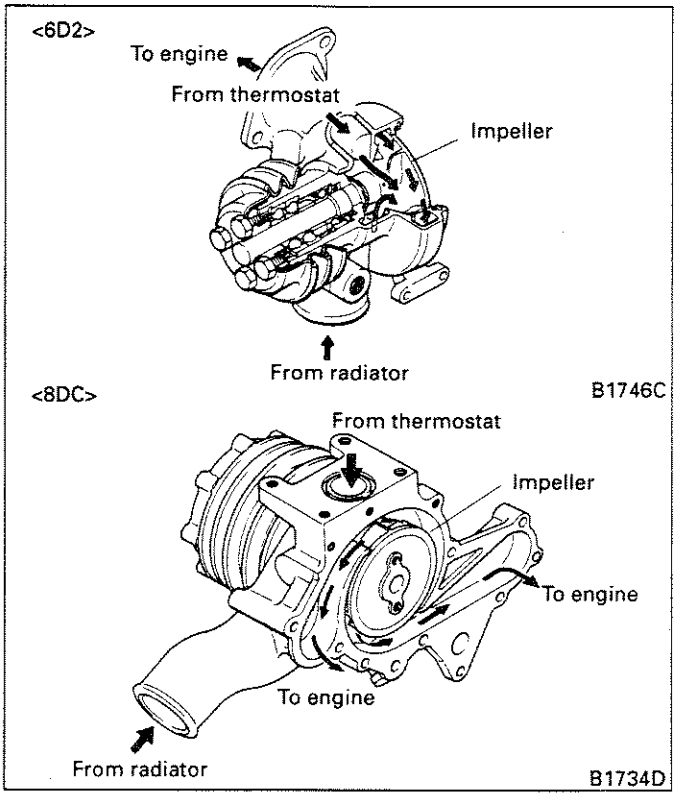

The water pump, of the centrifugal type, is driven by V-belt from the crankshaft pulley.
Mounted at one end of the water pump shaft is an impeller with blades and the coolant is sealed up by unit seal.
For lubrication of the water pump, see Group 12 Lubrication.

(2) Thermostat

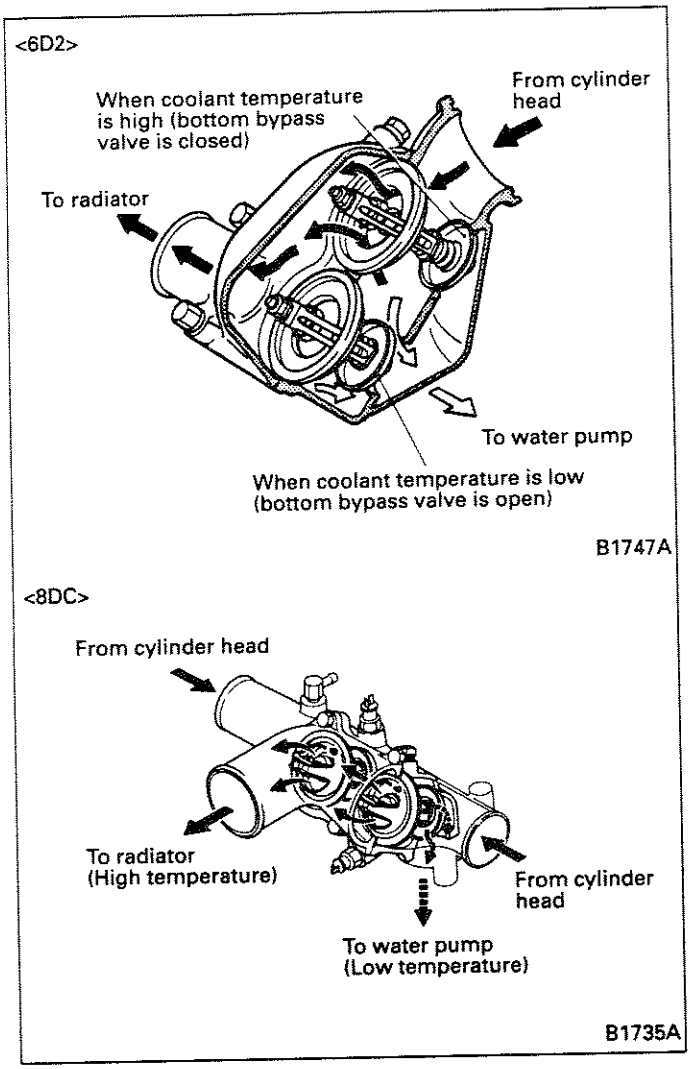

The thermostat is of bottom bypass type with a valve controlled by special wax enclosed in a pellet. When the wax is heated, it passes from a solid to a liquid state with its volume changing. This change in volume regulates the amount of coolant flowing into the radiator and water pump (bypass side), thereby controlling coolant temperature.

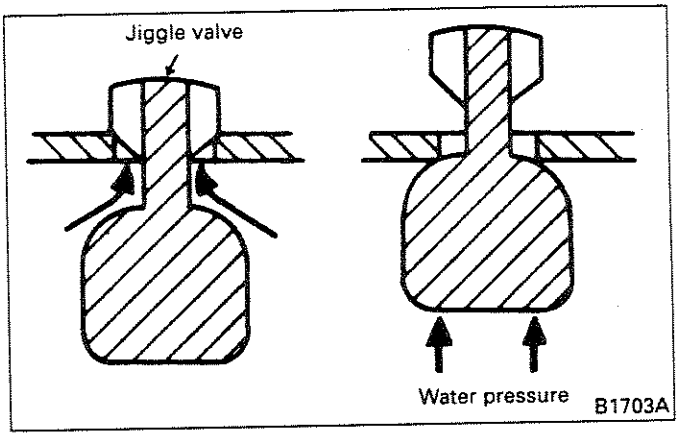

A jiggle valve is installed in the thermostat for 8DC. The jiggle valve is normally in the lower position. Air in the engine is led to radiator through the clearance between the jiggle valve and the breather hole, which permits easy supply of coolant.
When the engine is started and coolant flows, the jiggle valve is pushed up to close the breather hole. Therefore, coolant cannot flow into the radiator until the temperature rises enough to open the thermostat valve. This contributes to a shorter engine worm up time.

(3) Radiator

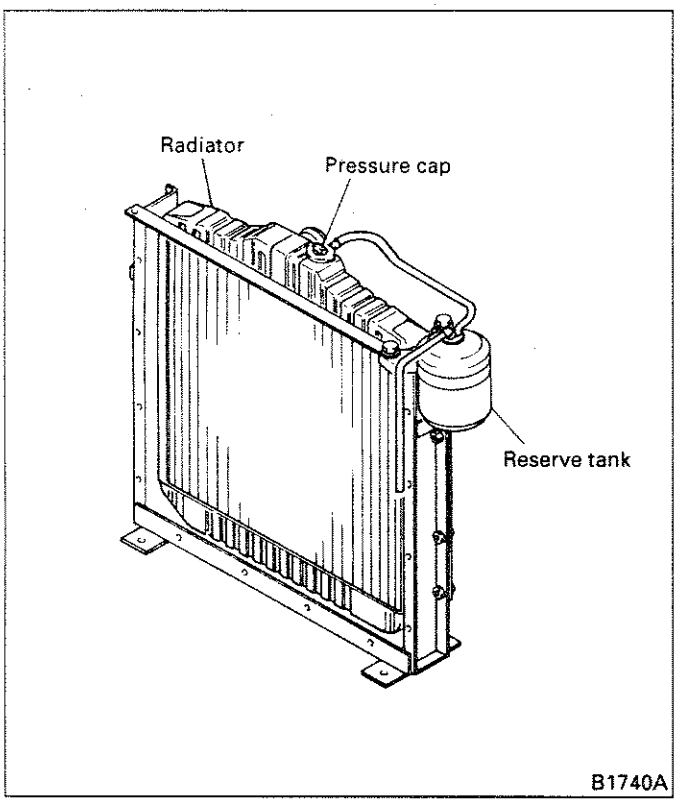

The radiator, with a tube-and-corrugated-fin type core (and with a reserve tank on some models), not only cools the engine coolant but also separates vapor from liquid water and regulates pressure in the cooling system.

(4) Pressure cap

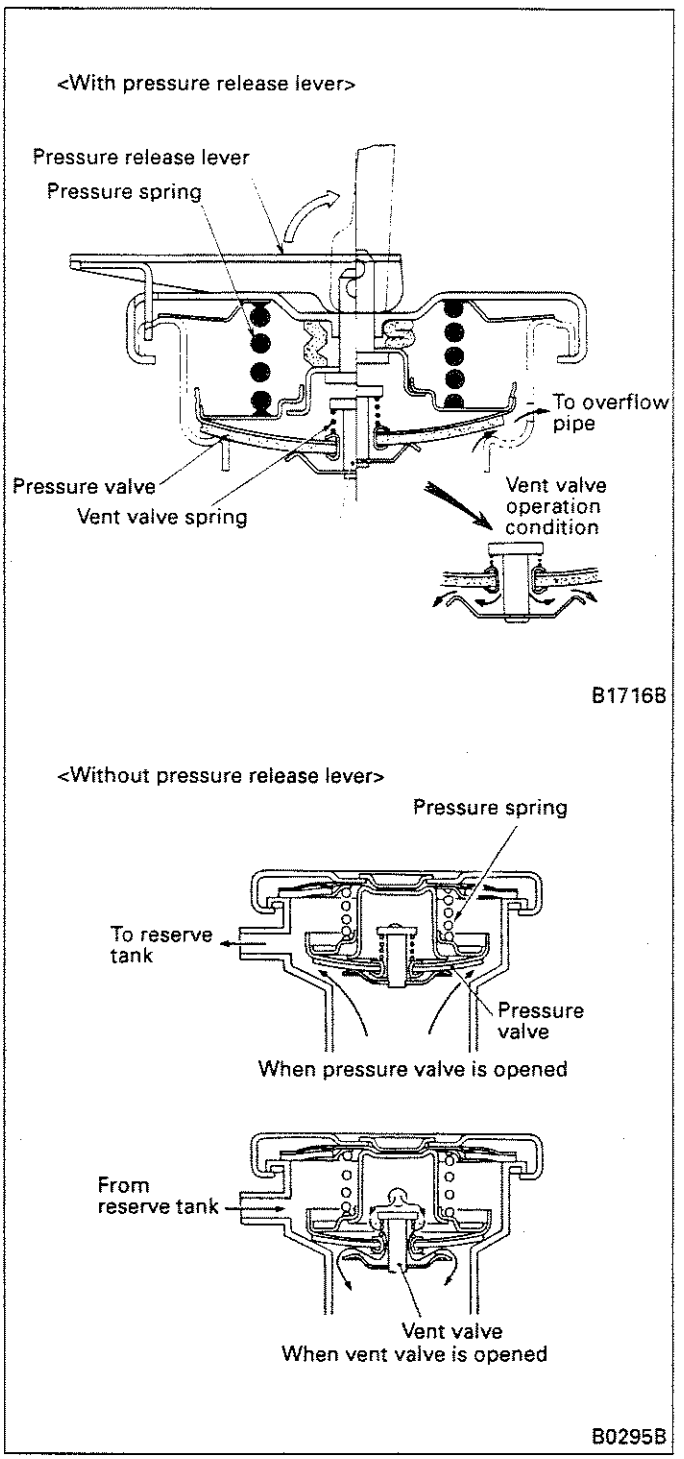

The pressure cap regulates the pressure in the cooling system. When the pressure builds up in the system that exceeds a predetermined level, the pressure valve compresses the pressure spring, releasing the excessive pressure through the overflow pipe into the atmosphere.

If equipped with a reserve tank, the coolant that has overflowed is channeled into it.
When the coolant temperature drops and negative pressure builds up in the system, the vent valve opens to take in air to prevent the radiator from becoming deformed.
If equipped with a reserve tank, coolant is taken from the reserve tank to prevent the radiator from becoming deformed and to keep the quantity of coolant in the system constant.
If equipped with a pressure release lever on the cap, raising the lever upright opens the pressure valve and releases the pressure in the cooling system.

(5) Auto cool fan coupling

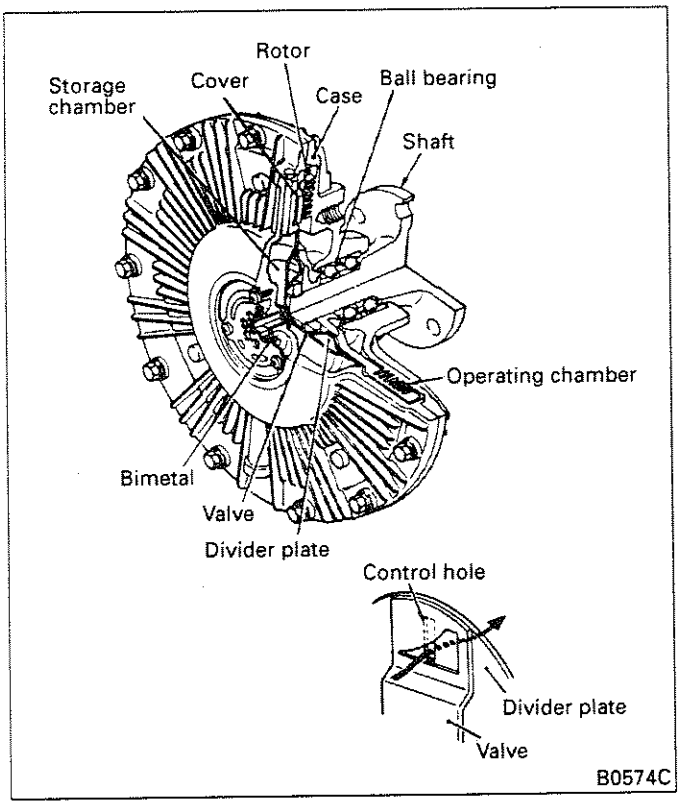

Depending on the temperature of the air passing through the radiator, the auto cool fan coupling automatically controls the rotating speed of the fan.
The autocool fan coupling is constructed as follows: The rotor is mounted on the shaft and rotates between the case and cover. Viscous coupling material (silicone oil) enters the gap and turns the fan. A control hole in the divider plate allows silicone oil to pass from the storage chamber to the operating chamber. The hole is controlled by a valve. Opening and closing of the valve is controlled by a bimetallic strip that moves in response to temperature changes.

<When the temperature of the air passing through the radiator is low>

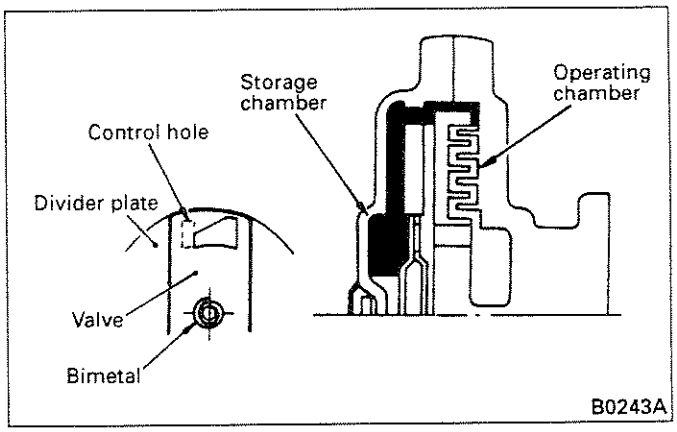

The valve fully closes the control hole of the divider plate. As a result, the silicone oil forced back from the pump hole is stored in the storage chamber and is not sent into the operating chamber. In the meantime, the silicone oil in the operating chamber decreases, and consequent slippage between the case and cover and the rotor causes the fan to rotate at a lower speed.

<When the temperature of the air passing through the radiator rises>

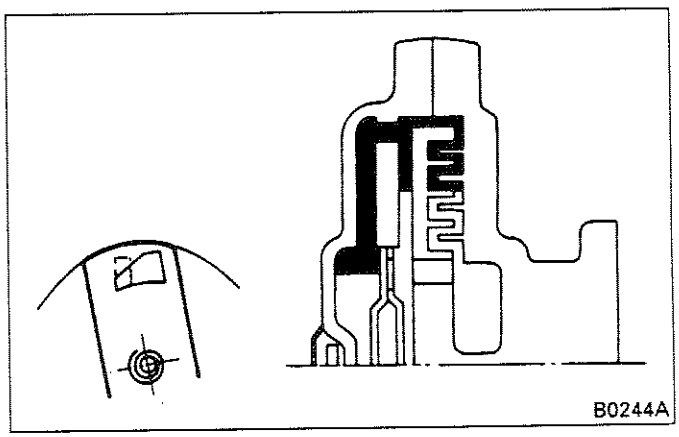

As the temperature rises, the valve slowly opens the control hole of the divider plate, allowing silicone oil to flow into the operating chamber. Therefore, the silicone oil contacting area between the case and cover and the rotor slowly increases. So more torque is transmitted to the fan, causing it to rotate at a higher speed.

<When the temperature of the air passing through the radiator is high>

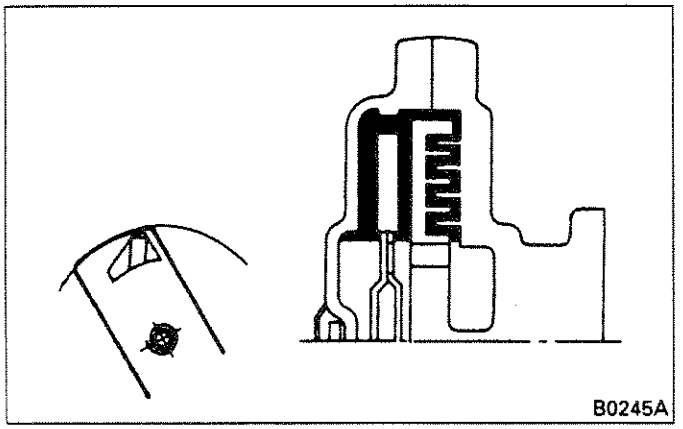

The valve fully opens the control hole of the divider plate, and more silicone oil flows into the operating chamber.
As a result, a maximum torque is transmitted from the shaft to the fan, causing the fan to rotate at a given maximum speed.

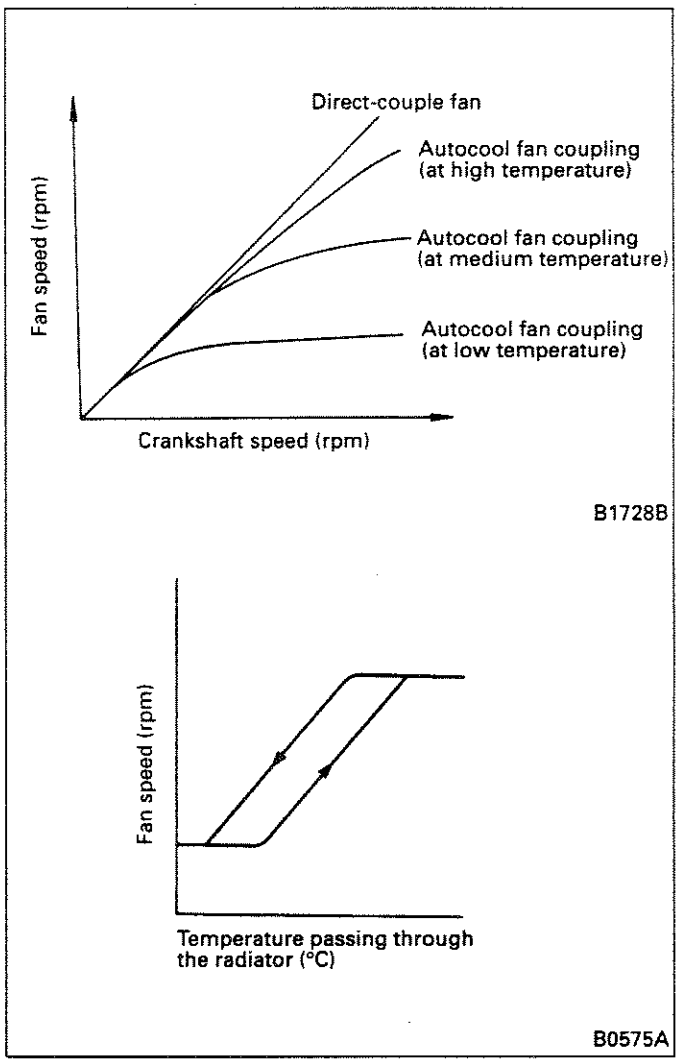

2. SPECIFICATIONS

<6D2>

Item		Specification	
Cooling system		Water-cooling forced circulation type	
Coolant quantity (Engine-proper only)		6D22, 22-T, 24-T	Approx. 22 L
		6D22-TC, 24-TC	Approx. 24 L
Water pump	Type	Centrifugal type	
	Drive method	V-belt	
Radiator	Type	Tube-and-corrugated-fin type or Tube-and-plate-fin type	
Thermostat	Type	Wax pellet/bottom bypass type	
	Valve opening temperature x Q'ty	Without jiggle valve: 76.5°C x 2	
Cooling fan		Suction type or blower type	
V-belt	Type x Number of belts	Without fan drive	Low edge cog B type x 1 or B type x 2
		With fan drive	Low-edge cogged type B x 1 (for water pump) Low-edge cogged type C x 2 (for alternator)
			Low-edge cogged type B x 1 (for water pump) Low-edge cogged type B x 2 (for alternator)

<8DC>

Item		Specification	
Cooling system		Water-cooling forced circulation type	
Coolant quantity (Engine-proper only)		8DC9, 9-T, 9-TL	Approx. 25 L
		8DC9-TC	Approx. 28 L
Water pump	Type	Centrifugal type	
	Drive method	V-belt	
Radiator	Type	Tube-and-corrugated-fin type or Tube-and-plate-fin type	
Thermostat	Type	Wax pellet/bottom bypass type	
	Valve opening temperature x Q'ty	8DC9, 9-T, 9-TC	With jiggle valve: 82°C x 2
		Option: 8DC9-T, 9-TL	With jiggle valve: 82°C x 2 Without jiggle valve: 82°C x 1
		Option: 8DC9	Without jiggle valve: 76.5°C x 2
		8DC9-TL	With jiggle valve: 82°C x 1 Without jiggle valve: 88°C x 1
Cooling fan		Suction type or blower type	
Autocool fan coupling <8DC9-TL>	Type	Viscous type	
	Hydraulic fluid	Silicone oil	
V-belt	Type x Number of belts	Without fan drive	Low edge cog C type x 1 or C type x 2
		With fan drive	Low-edge cogged type C x 1 (for water pump) Low-edge cogged type C x 2 (for alternator)
			Low-edge cogged type C x 2 (for water pump) Low-edge cogged type B x 2 (for alternator)

3. SERVICE STANDARDS

3.1 Service Standards Table

Unit: mm

Maintenance item			Nominal value (Basic diameter in [ ])	Limit	Remedy and remarks
Clearance between fan and fan shroud (Only for type with a fan shroud secured to engine)		8DC	4.5 to 8.5	–	Adjust
Interference between pump shaft and flange		6D2	[25] 0.05 to 0.08	–	Up to second reassembly
		8DC9, 9-T, 9-TC	[35] 0.05 to 0.08	–	
		8DC9-TL	[28] 0.03 to 0.06	–	
Interference between pump shaft and impeller		6D2	[11.8] 0.03 to 0.06	–	Up to second reassembly
		8DC9, 9-T, 9-TC	[15.5] 0.04 to 0.06	–	
		8DC9-TL	[15.5] 0.03 to 0.05	–	
Thermostat	6D2 8DC9: Option	Valve opening temperature	74.5 to 78.5°C	–	Replace
		Valve lift/ temperature	10 or more/90°C	–	
	8DC9, 9-T, 9-TC, 9-TL: RH	Valve opening temperature	80 to 84°C	–	
		Valve lift/ temperature	10 or more/95°C	–	
	8DC9-TL: LH	Valve opening temperature	86 to 90°C	–	
		Valve lift/ temperature	10 or more/100°C	–	
Radiator inspection pressure (air pressure)			98 kPa {1 kgf/cm^2}	–	Correct or replace
Pressure valve opening pressure			39 to 59 kPa {0.4 to 0.6 kgf/cm^2}	–	Pressure cap, replace
V-belt deflection [with a push force of about 98 N (10 kgf)]	6D2		10 to 15	–	Adjust
	8DC		10 to 15	–	
	8DC9: Option (for alternator only)		15 to 18	–	
	8DC9-T (For tension pulley only), 9-TC (For fan drive only), 8DC9: Option (For water pump only),		7 to 10	–	

3.2 Tightening Torque Table

Location tightened		Screw size O.D. x pitch (mm)	Tightening torque N·m {kgf·m}
Spacer mounting bolt	8DC9-TL	M10 x 1.5	49 {5}
Water pump pulley mounting bolt	8DC9-TL	M10 x 1.5	44 {4.5}
Water pump cover mounting bolt	8DC	M8 x 1.25	9.8 {1}
Fan drive flange mounting nut	6D2	M20 x 1.5	145 {15}
	8DC	M27 x 1.5	245 {25}
Tension pulley mounting nut	6D2	M16 x 1.5	98 {10}

4. SPECIAL TOOL

Unit: mm

Tool name	Shape
Tip Clearance Spacer MC019470 Adjustment of clearance between fan and shroud (Only for type with a fan shroud secured to engine)	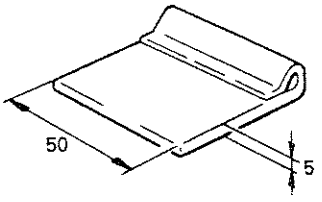 B5211A
Impeller Puller MH062192 Removal of water pump impeller	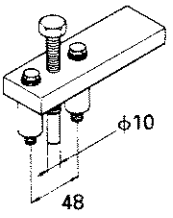 B5252C
Unit Seal Installer MH062195 <6D2> MH062199 <8DC> Water pump unit seal installation	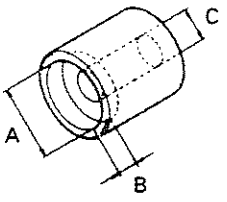 B5094A

	ϕ A	B	ϕ C
6D2	28	9.6±0.03	12.5
8DC	33	11.3±0.03	16.5

Unit: mm

Tool name	Shape
Water Pump Pulley Puller MH062411 <6D2> Removing water pump flange	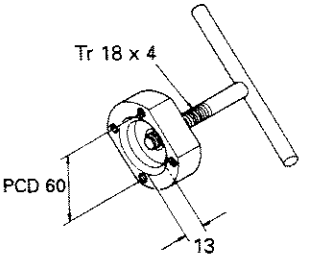 B5258A
Belt Tension Gauge MH062345 Measuring V-belt tension	 03612

5. SERVICE PROCEDURE

5.1 Removal and Installation of Fan Shroud

<8DC> (Only for type with a fan shroud secured to engine)

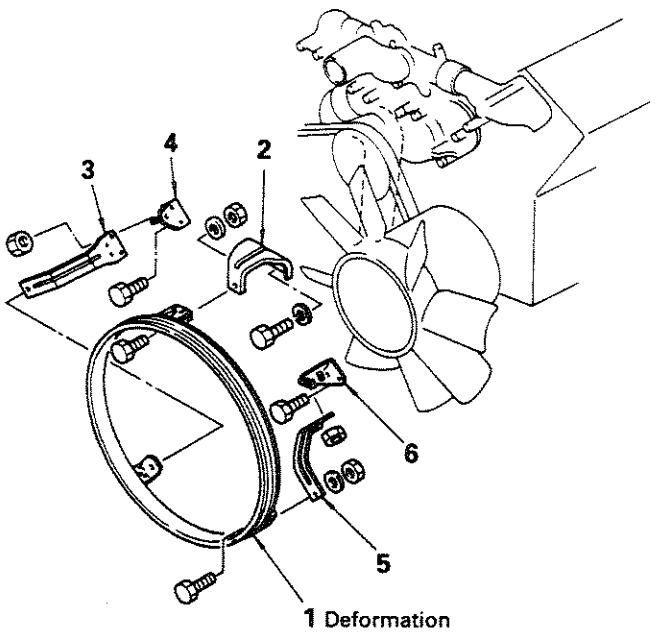

① Fan shroud
2 Upper shroud stay
3 Lower shroud stay RH
4 Lower shroud bracket RH
5 Lower shroud stay LH
6 Lower shroud bracket LH

For parts with an encircled number, refer to Installation Procedure that follows.

B4599A

Installation Procedure

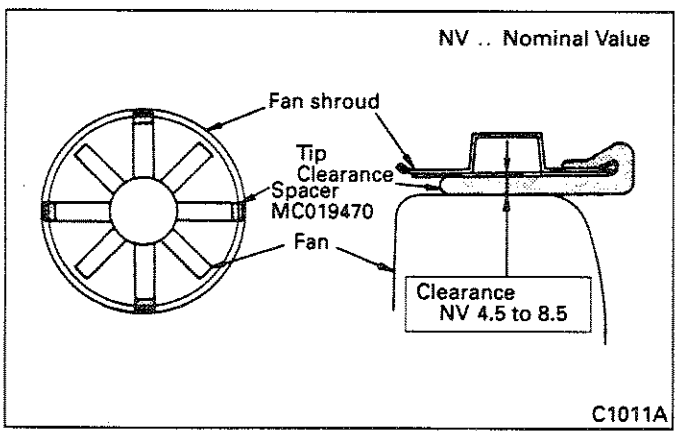

C1011A

When the fan shroud is installed, adjust the clearance between the shroud and cooling fan.
Hold the fan shroud in the Tip Clearance Spacer (special tool), and move the fan shroud to make sure that the clearance between the shroud and cleaning fan is constant.
After the adjustment, secure the fan shroud.

5.2 Removal and Installation of Cooling Fan

<6D2>

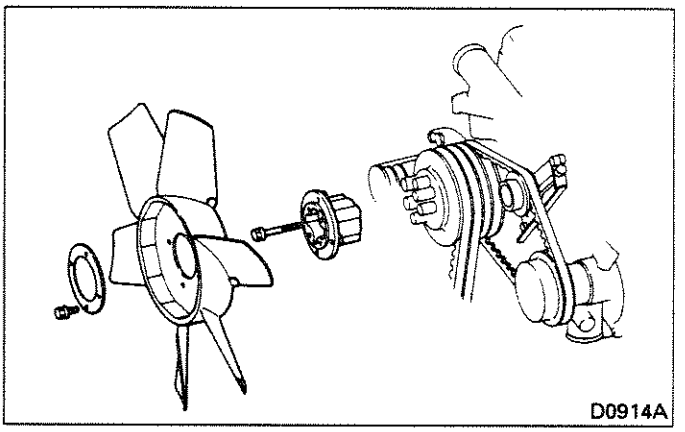

D0914A

<8DC9, 9-T, 9-TC>

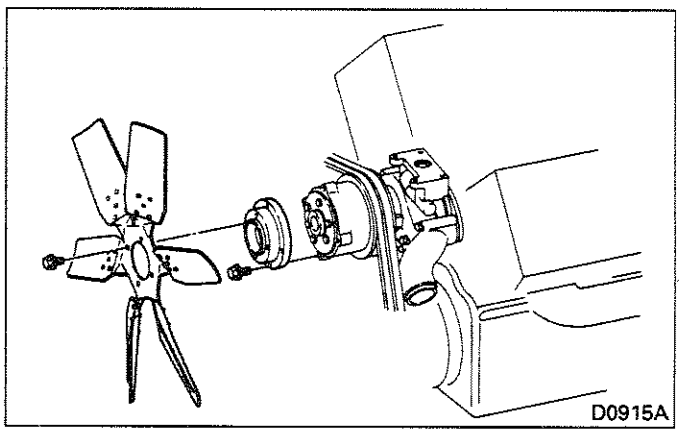

D0915A

<8DC9-TL>

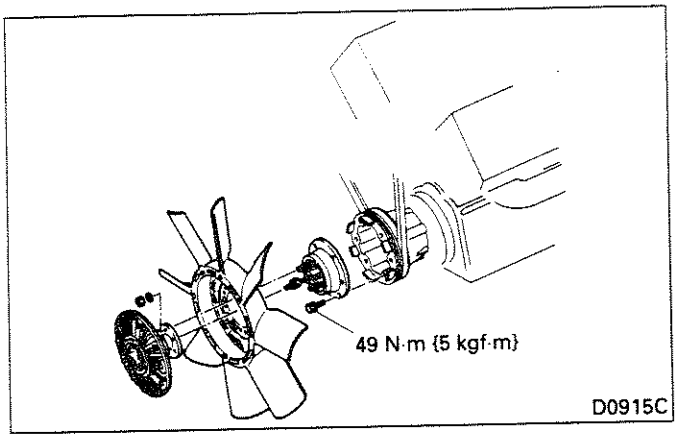

5.3 Water Pump <6D2>

5.3.1 Removal and installation

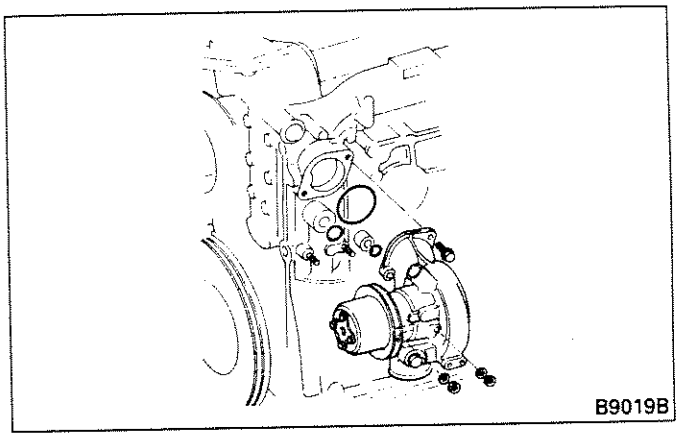

5.3.2 Disassembly and inspection

<6D22, 22-T, 24-T>

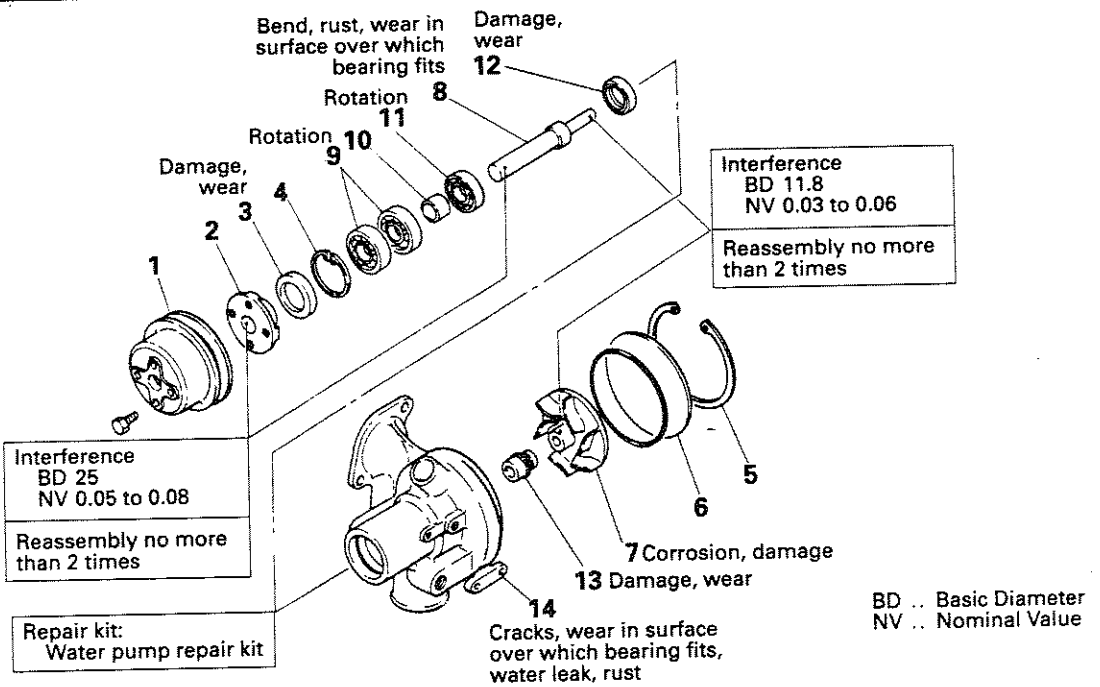

Disassembly sequence

1 Water pump pulley
② Flange
3 Oil seal
4 Snap ring
5 Snap ring
6 Water pump cover
7 Impeller
8 Water pump shaft
9 Bearing
10 Spacer
11 Bearing
12 Oil seal
13 Unit seal
14 Water pump case

For parts with an encircled number, refer to Disassembly and Inspection Procedures that follow.

D0044G

<6D22-TC, 24-TC>

BD .. Basic Diameter
NV .. Nominal Value

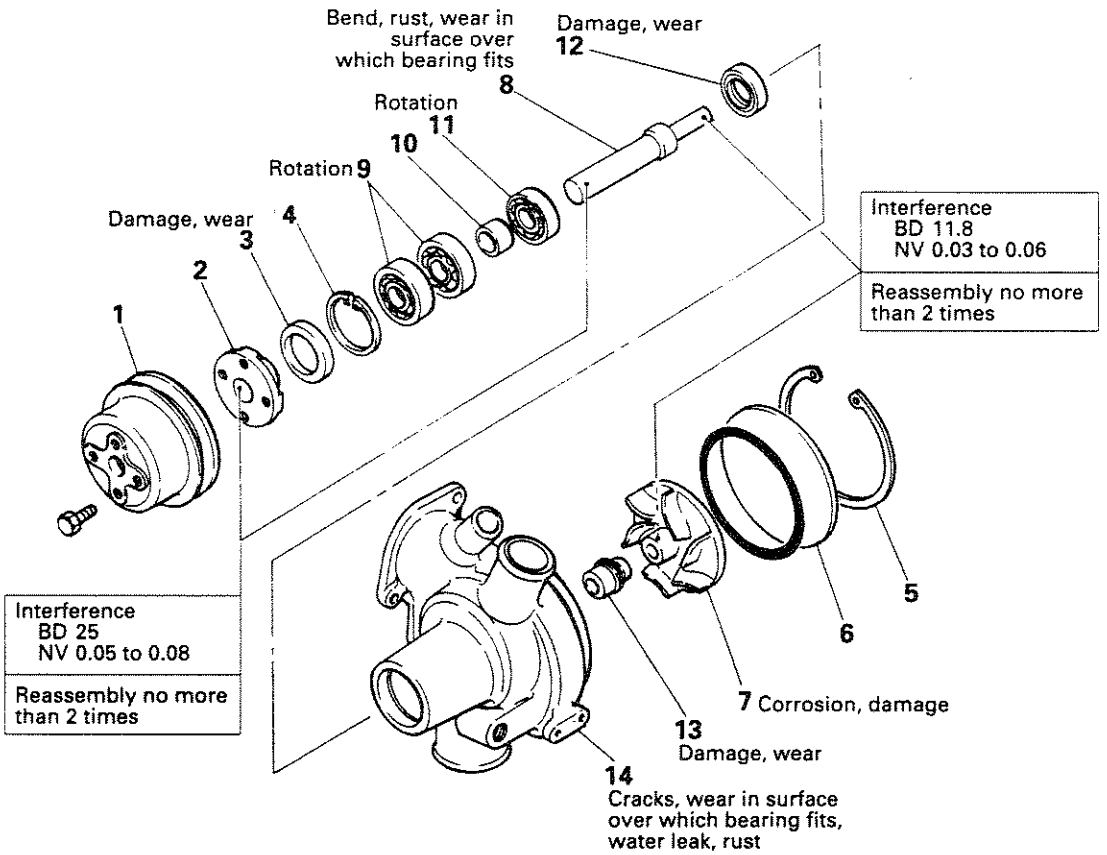

Disassembly sequence

1	Water pump pulley	8	Water pump shaft
②	Flange	9	Bearing
3	Oil seal	10	Spacer
4	Snap ring	11	Bearing
5	Snap ring	12	Oil seal
6	Water pump cover	13	Unit seal
7	Impeller	14	Water pump case

For parts with an encircled number, refer to Disassembly and Inspection Procedures that follow.

D0044H

Disassembly and Inspection Procedures

(1) Removal of flange

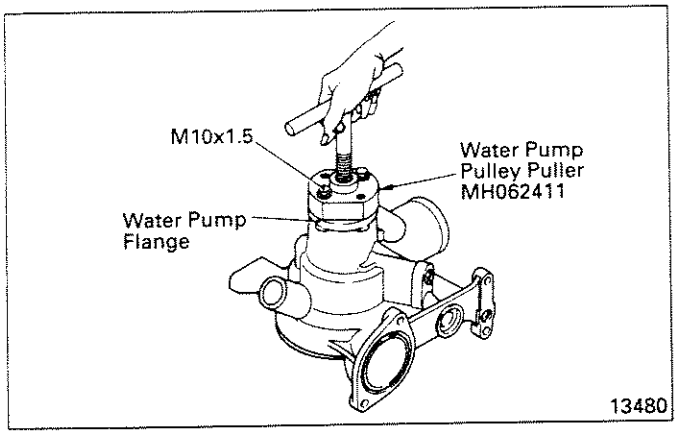

Remove the water pump flange using the Water Pump Pulley Puller and Bolt (special tools). Slip an iron pipe or similar item over the handle to gain the necessary leverage.

(2) Removal of impeller

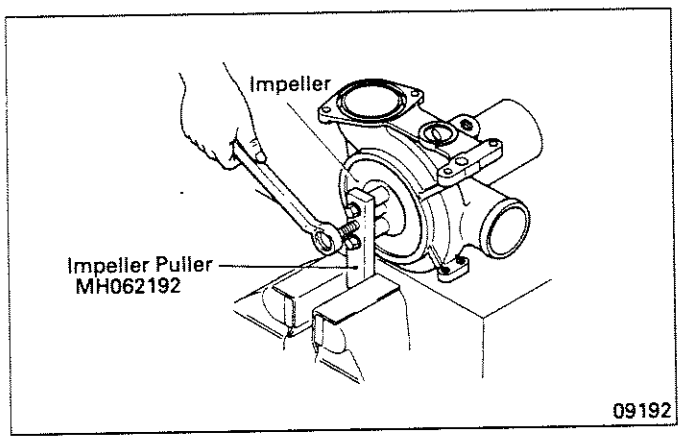

Using two threaded holes (M8 x 1.25) in the impeller and the Water Pump Impeller Puller (special tool), pull off the impeller.

(3) Flange to water pump shaft tightening margin

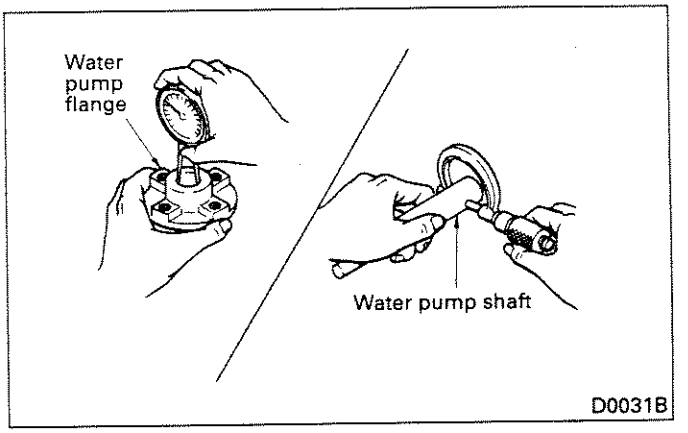

If the tightening margin exceeds specification, replace the flange or water pump shaft.

NOTE:

Do not reassemble more than three times even when the specification is met.

(4) Impeller to water pump shaft tightening margin

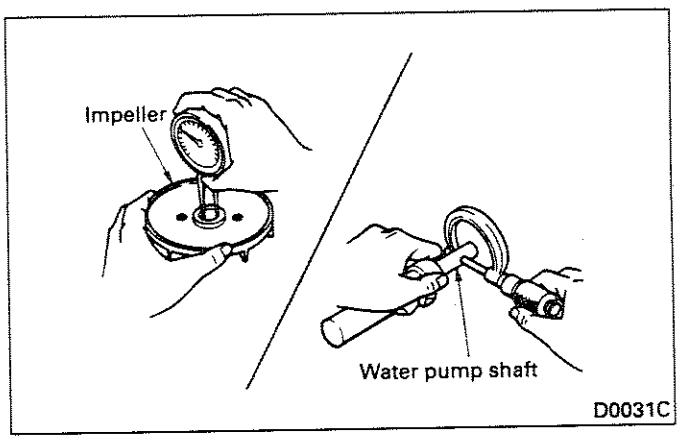

If the tightening margin exceeds specification, replace the impeller or water pump shaft.

NOTE:

Do not reassemble more than three times even when the specification is met.

5.3.3 Reassembly

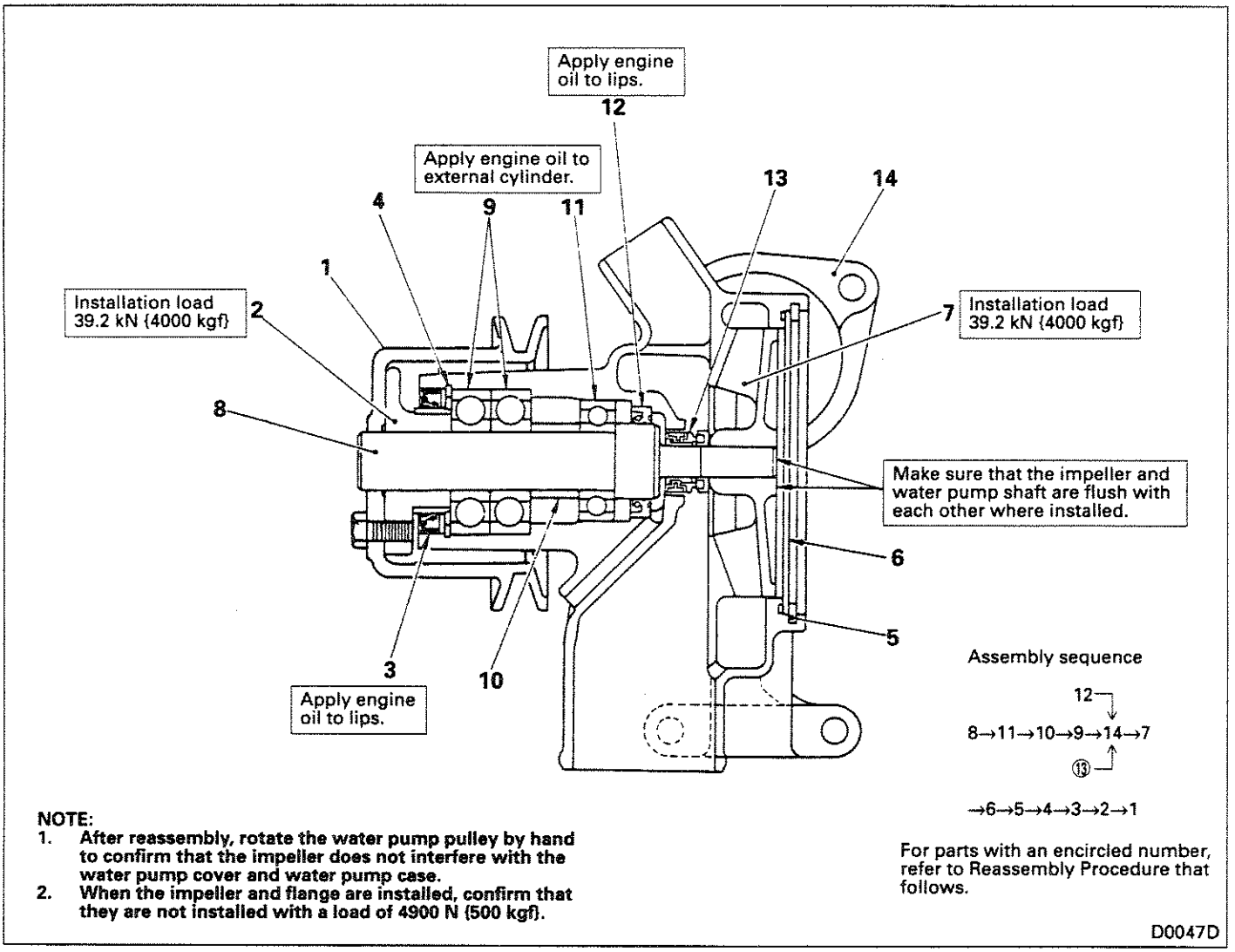

NOTE:
1. **After reassembly, rotate the water pump pulley by hand to confirm that the impeller does not interfere with the water pump cover and water pump case.**
2. **When the impeller and flange are installed, confirm that they are not installed with a load of 4900 N {500 kgf}.**

Reassembly Procedure

<Installation of unit seal>

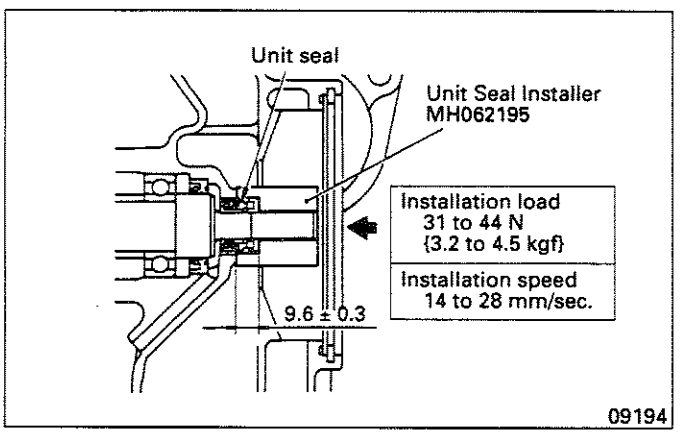

To install the unit seal, use the Unit Seal Installer (special tool) as shown and press-fit the unit seal until the installed dimensions shown are obtained.

5.4 Water Pump <8DC>

5.4.1 Removal and installation

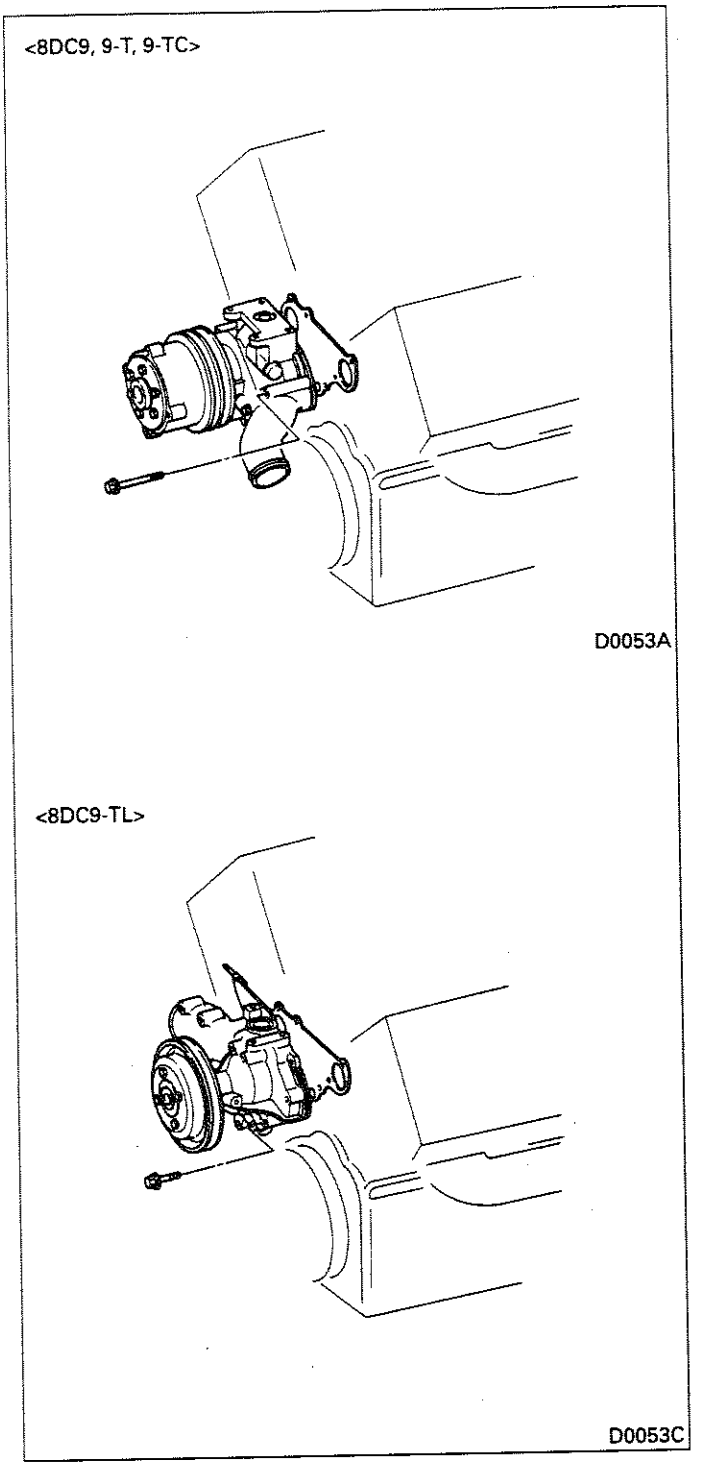

5.4.2 Disassembly and inspection

<8DC9, 9-T, 9-TC>

BD .. Basic Diameter
NV .. Nominal Value

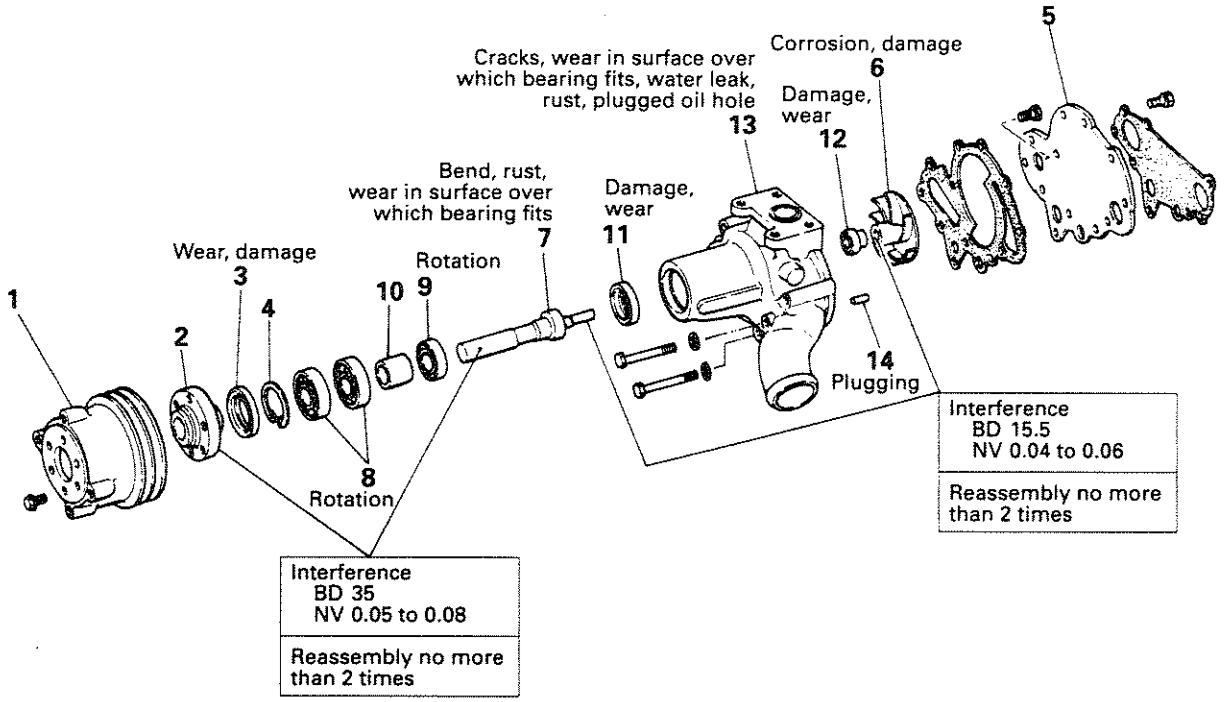

Disassembly sequence

1 Water pump pulley
② Flange
3 Oil seal
4 Snap ring
5 Water pump cover
⑥ Impeller
⑦ Water pump shaft
8 Bearing
9 Bearing
10 Spacer
11 Oil seal
12 Unit seal
13 Water pump case
*14 Nozzle

For parts with an encircled number, refer to Disassembly and Inspection Procedures that follow.
Do not remove the parts marked with * unless defects are evident.

D0022F

<8DC9-TL>

BD .. Basic Diameter
NV .. Nominal Value

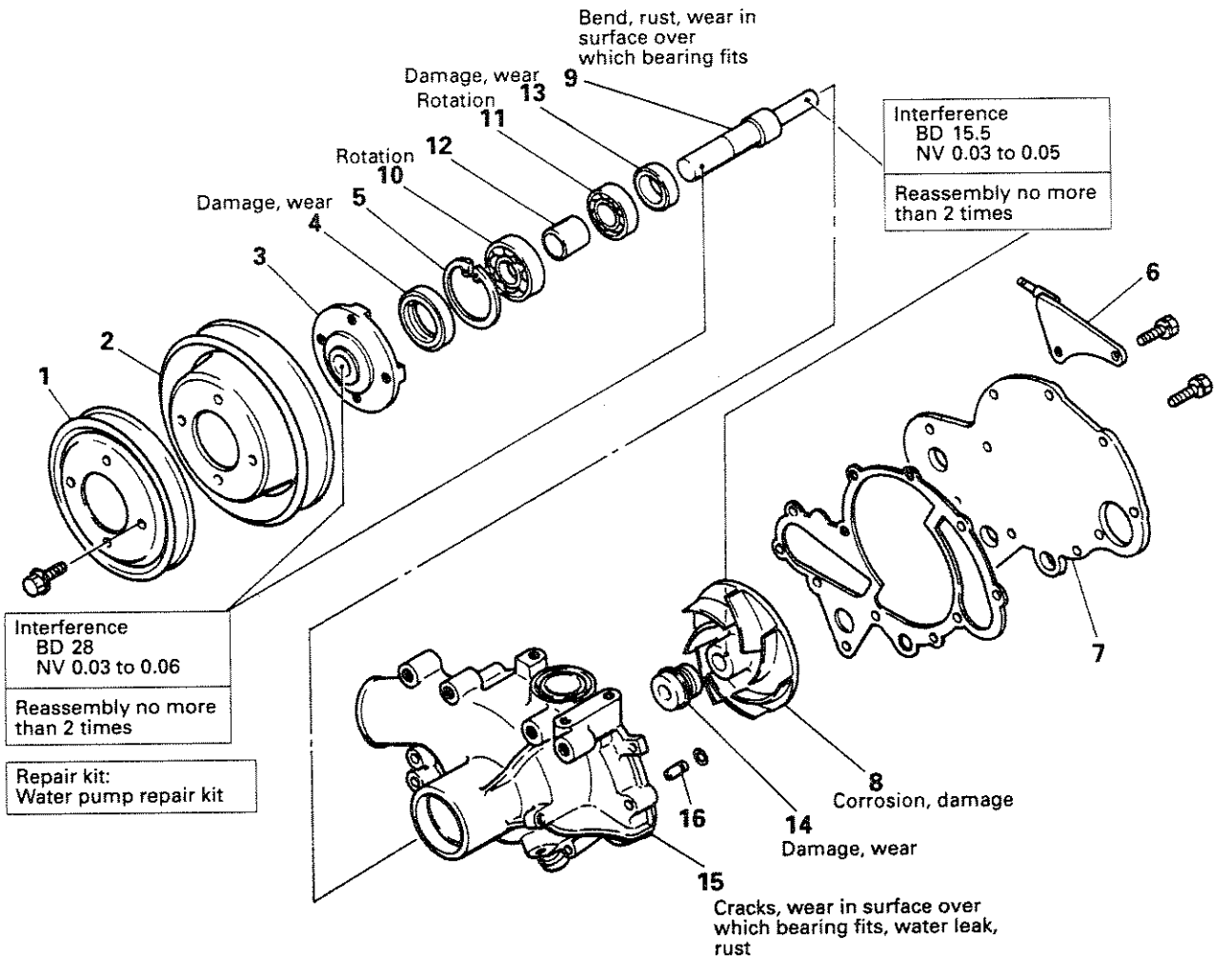

Disassembly sequence

1 Water pump pulley B
<models with air conditioner only>
2 Water pump pulley A
③ Flange
4 Oil seal
5 Snap ring
6 Hanger
7 Water pump cover
⑧ Impeller
⑨ Water pump shaft
10 Bearing
11 Bearing
12 Spacer
13 Oil seal
14 Unit seal
15 Water pump case
*16 Nozzle

For parts with an encircled number, refer to Disassembly and Inspection Procedures that follow.
Do not remove the parts marked with * unless defects are evident.

D0022D

Disassembly and Inspection Procedures

(1) Removal of impeller

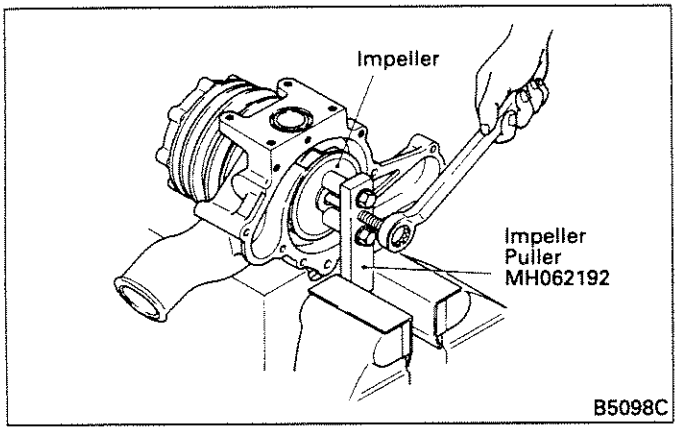

Using two threaded holes (M8 x 1.25) in the impeller and the Water Pump Impeller Puller (special tool), pull off the impeller.

(2) Flange to water pump shaft tightening margin

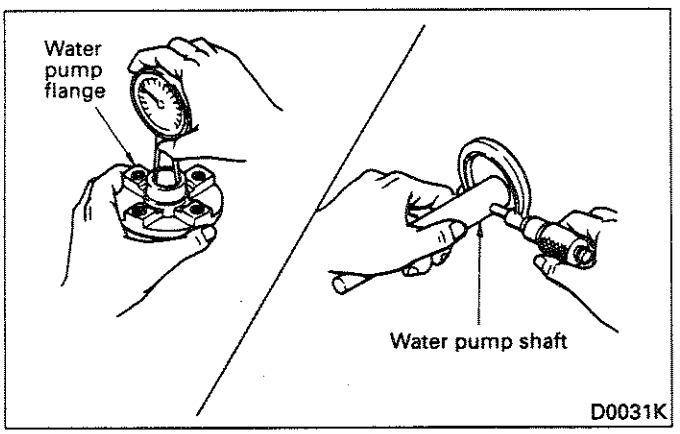

If the tightening margin exceeds specification, replace the flange or water pump shaft.

NOTE:

Do not reassemble more than three times even when the specification is met.

(3) Impeller to water pump shaft tightening margin

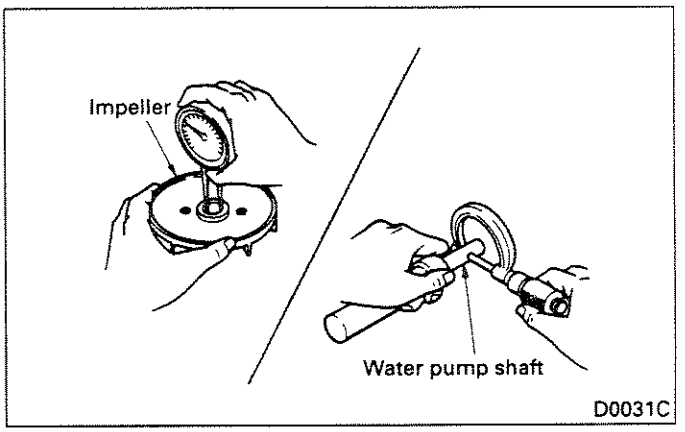

If the tightening margin exceeds specification, replace the impeller or water pump shaft.

NOTE:

Do not reassemble more than three times even when the specification is met.

5.4.3 Reassembly

<8DC9, 9-T, 9-TC>

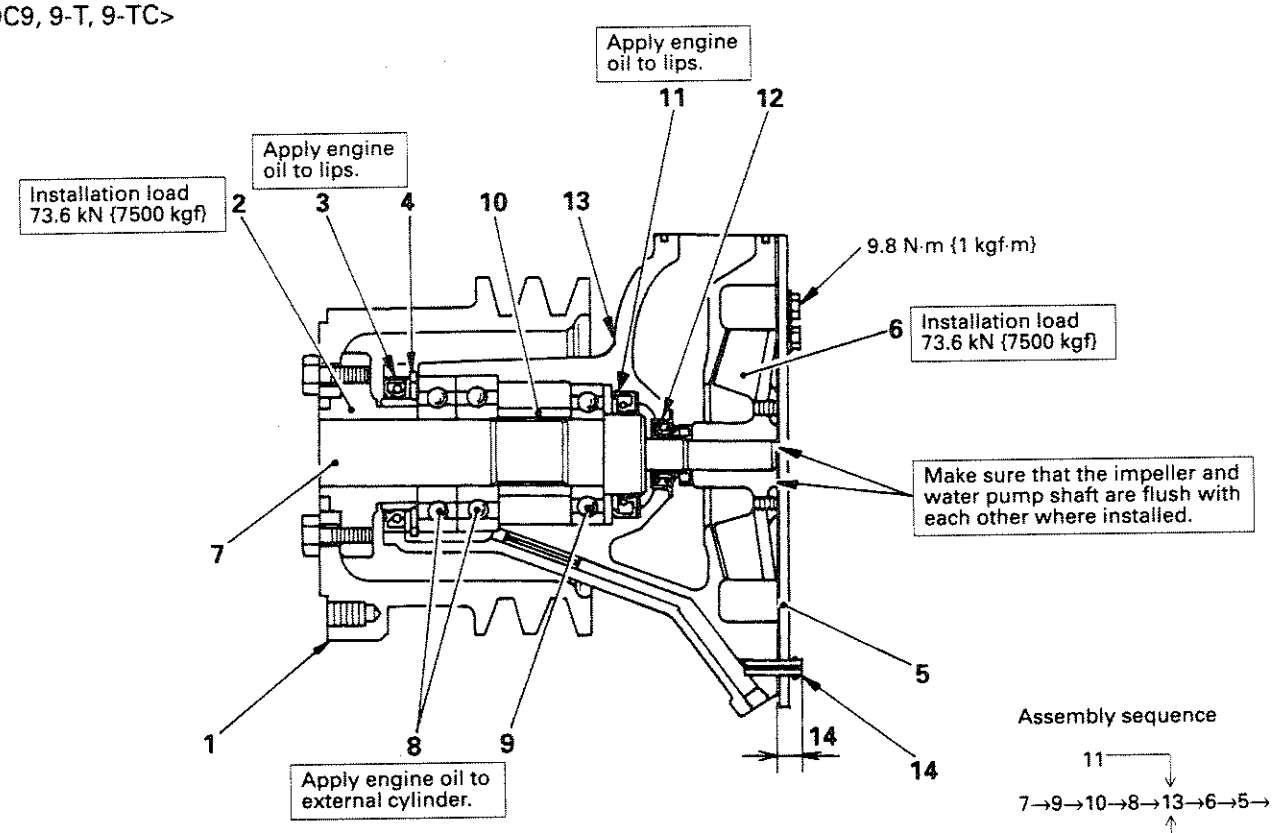

Assembly sequence

11 → 12

7→9→10→8→13→6→5→

4→3→2→1→14

For parts with an encircled number, refer to Reassembly Procedure that follows.

B1022E

NOTE:

1. **After reassembly, rotate the water pump pulley by hand to confirm that the impeller does not interfere with the water pump cover and water pump case.**
2. **When the impeller and flange are installed, confirm that they are not installed with a load of 8.82 kN {900 kgf}.**

<8DC9-TL>

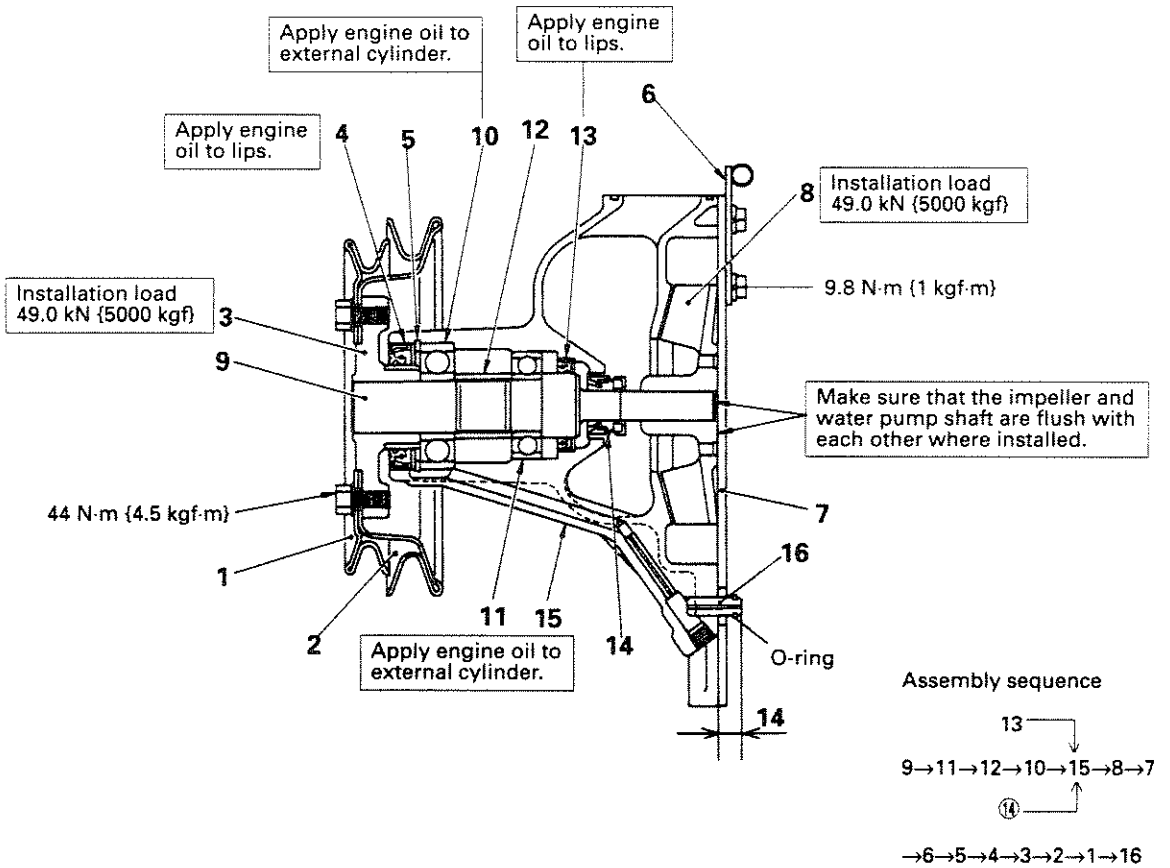

NOTE:
1. **After reassembly, rotate the water pump pulley by hand to confirm that the impeller does not interfere with the water pump cover and water pump case.**
2. **When the impeller and flange are installed, confirm that they are not installed with a load of 5.88 kN {600 kgf}.**

B1022C

Reassembly Procedure

<Installation of unit seal>

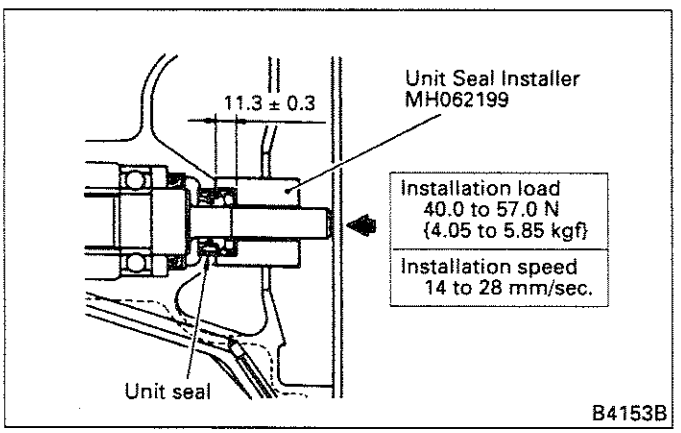

B4153B

To install the unit seal, use the Unit Seal Installer (special tool) as shown and press-fit the unit seal until the installed dimensions shown are obtained.

5.5 Thermostat

5.5.1 Removal and installation

<6D2>

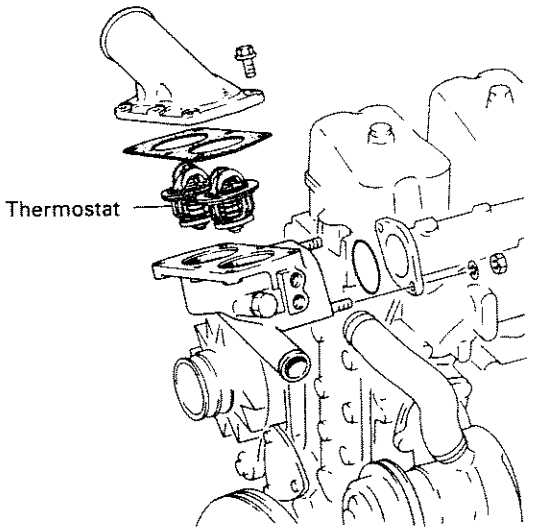

B9021B

<8DC9-T, 9-TL: Option>

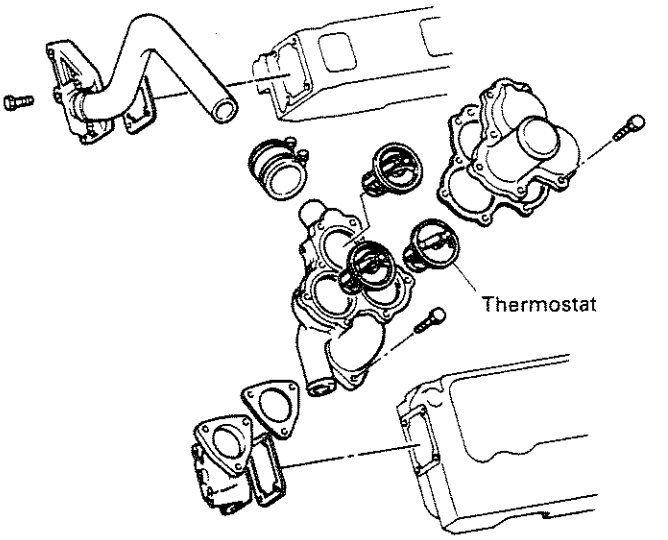

D0308A

<8DC9, 9-T, 9-TL>

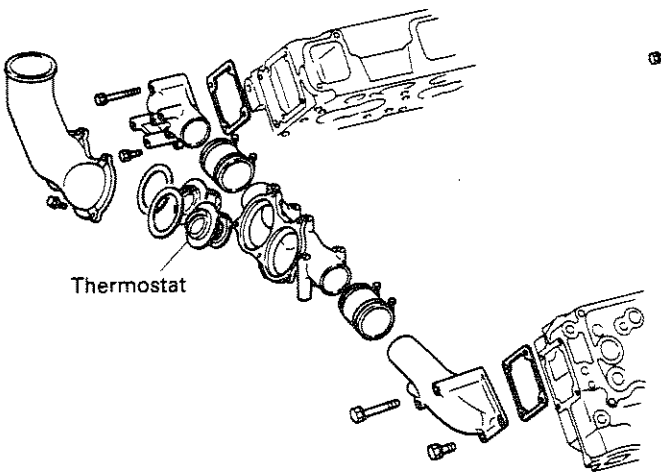

D0306A

<8DC9-TC, 9-T: Option>

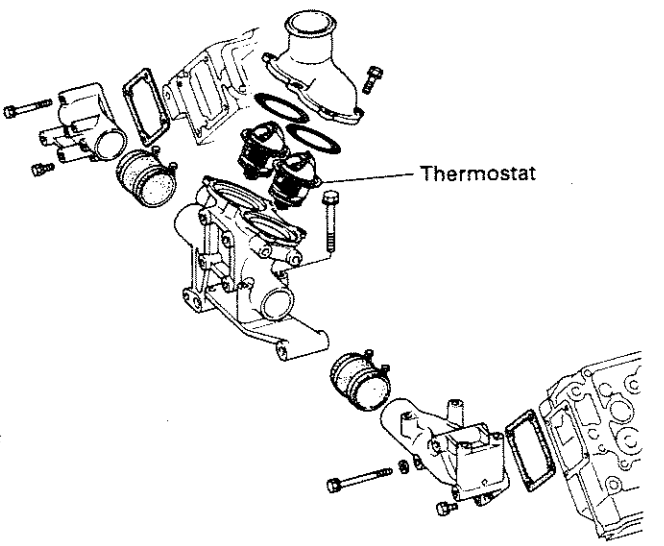

For thermostat installation instructions, refer to Installation Procedure that follows.

D0309A

Installation Procedure

<8DC9, 9-T, 9-TL>

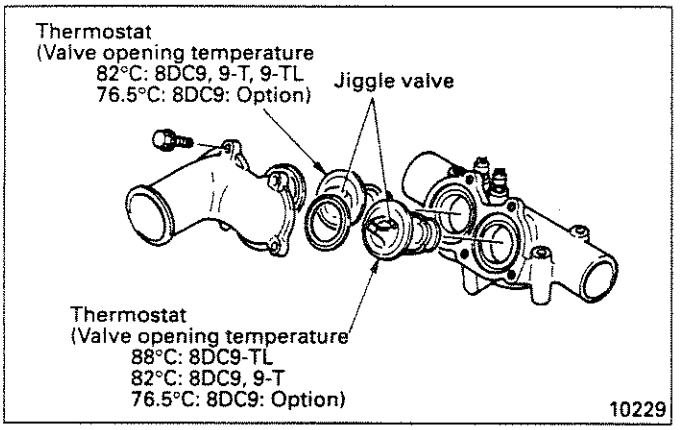

<8DC9-TC, 9-T: Option>

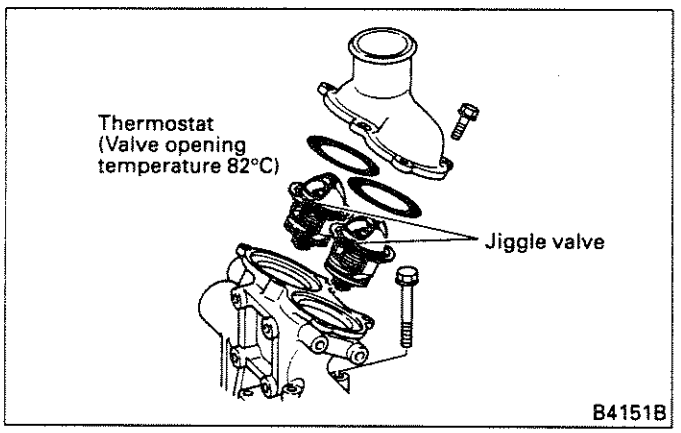

Install the thermostat so that the jiggle valve is located at the top.

<8DC9-T, 9-TL : Option>

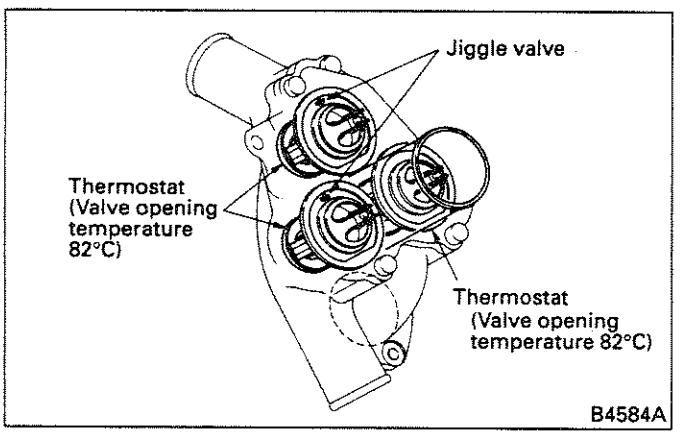

Install the thermostat so that the jiggle valve is located at the top.

Install the thermostat with a jiggle valve at the location shown.

5.5.2 Inspection

Thermostat marking	For 76.5°C	For 82°C	For 88°C
Valve opening temperature (°C)	74.5 to 78.5	80 to 84	86 to 90
Valve lift/ temperature (mm/°C)	10 or more/90	10 or more/95	10 or more/100

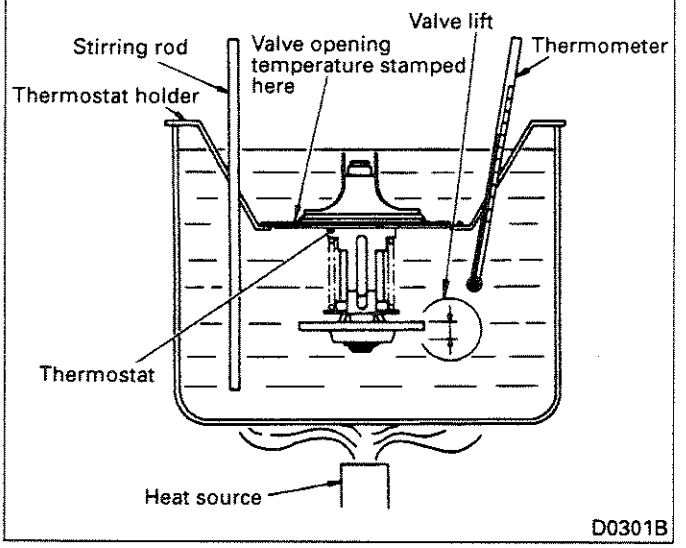

Agitate water in the container with the stirrer to obtain uniform temperature. For the inspection, use the following procedures.

(1) Slowly heat water to the thermostat valve opening temperature.
The valve opening temperature is stamped on the thermostat. Its nominal value is the stamped temperature ± 2°C.

(2) Keep this condition for about five minutes and make sure that the valve is open.

(3) Raise the temperature further to heat the water to the valve lift measuring temperature corresponding to the valve opening temperature. (See the table above.)
Keep this state for five minutes and measure the bypass valve lift.

(4) Lower temperature down to 65°C or below and ensure that the valve is fully closed.
If the thermostat is found defective in any of the above items, replace it with a new one.

5.6 Fan Drive

5.6.1 Disassembly and inspection

<6D2, 8DC9-TC>

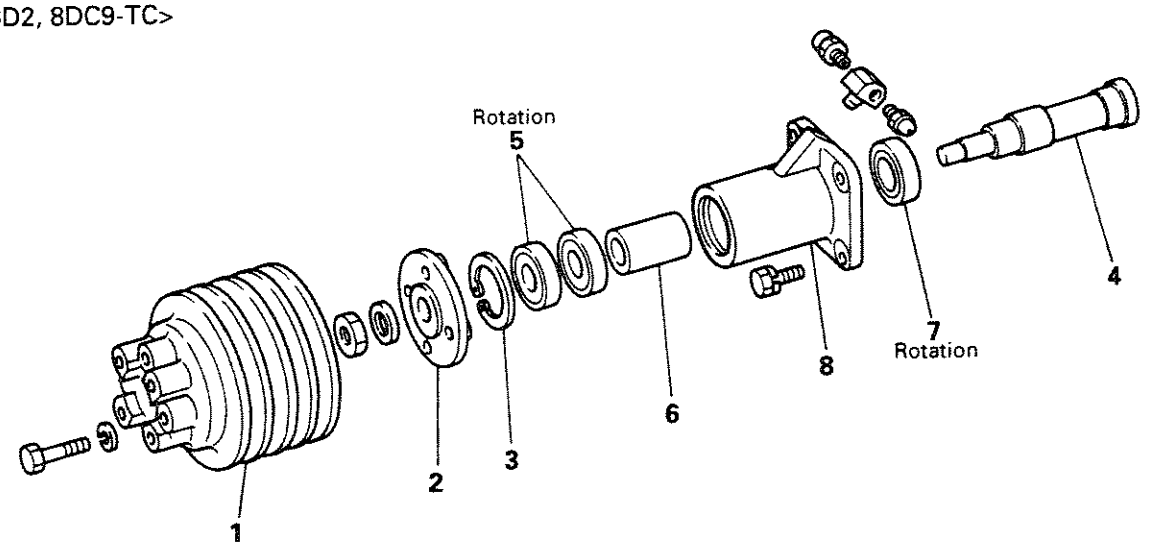

Disassembly sequence

1 Fan pulley
2 Flange
3 Snap ring
4 Fan drive shaft
5 Bearing
6 Spacer
7 Bearing
8 Bearing case

B9023D

<8DC>

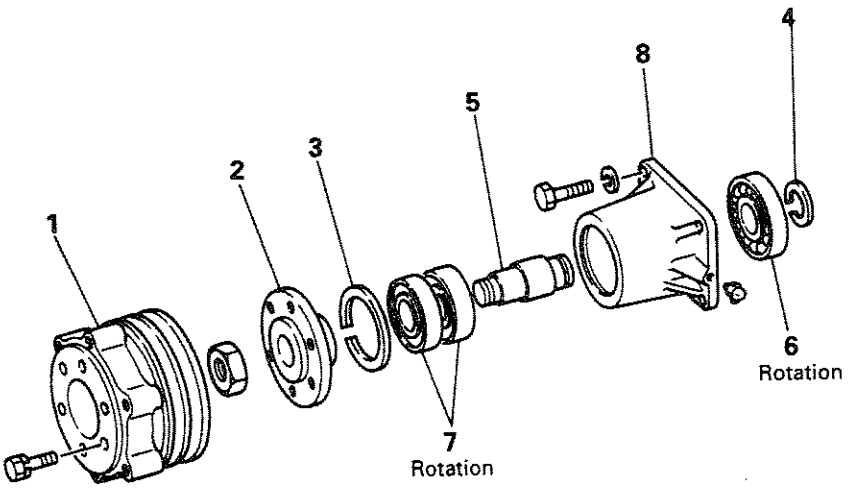

Disassembly sequence

1 Fan pulley
2 Flange
3 Snap ring
4 Snap ring
5 Fan drive shaft
6 Bearing
7 Bearing
8 Bearing case

D0917A

5.6.2 Reassembly

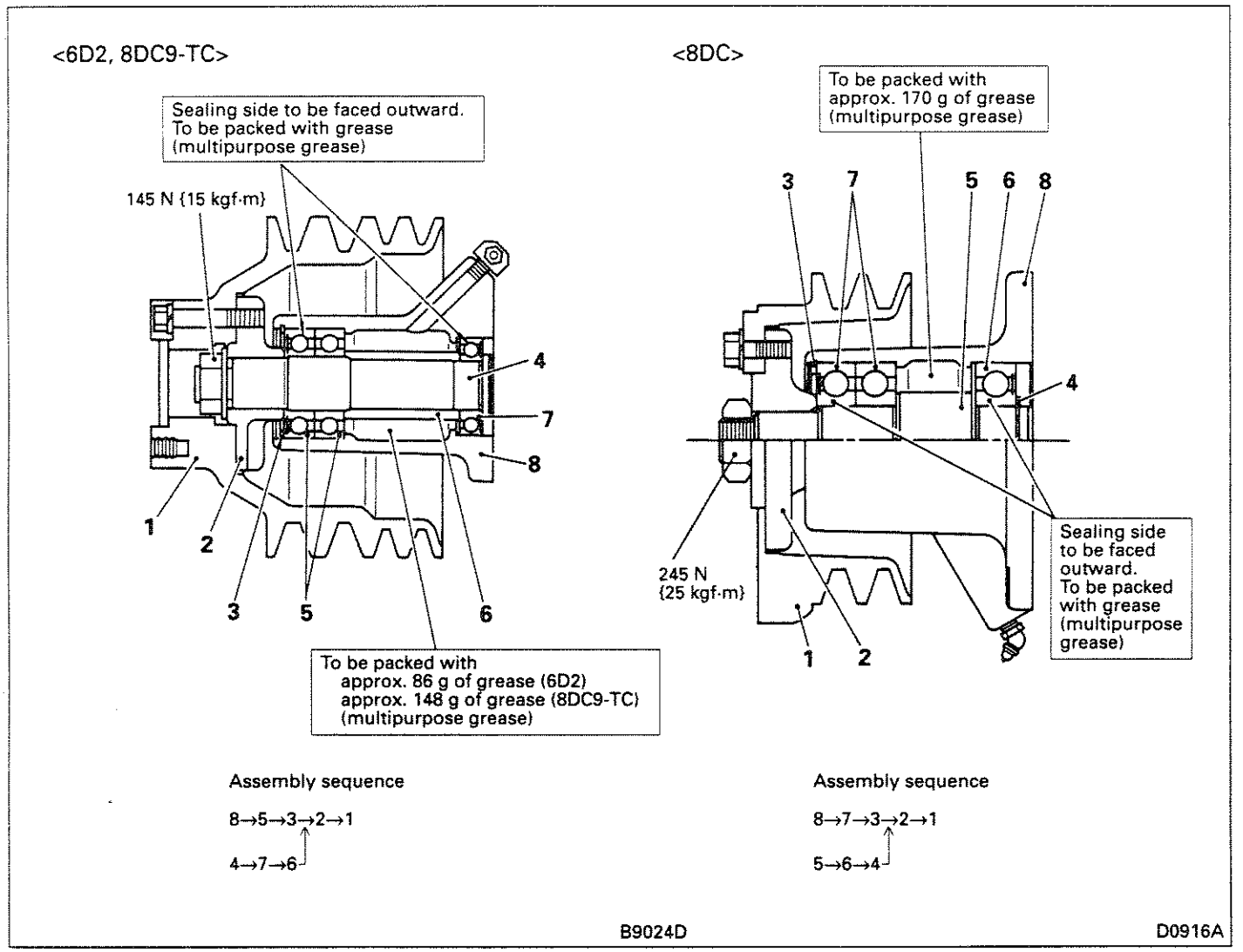

5.7 Tension Pulley

5.7.1 Disassembly and inspection

<6D2>

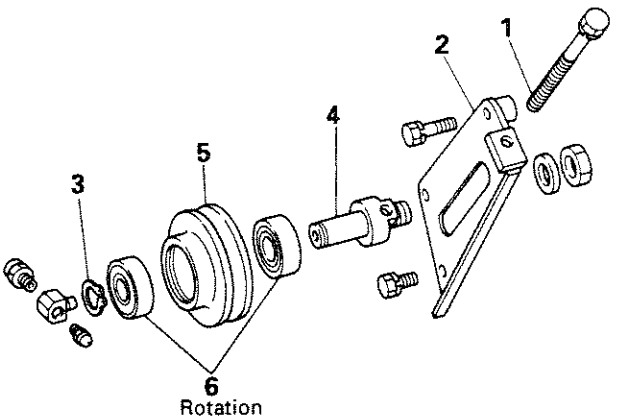

B9023E

<8DC9, 9-T>

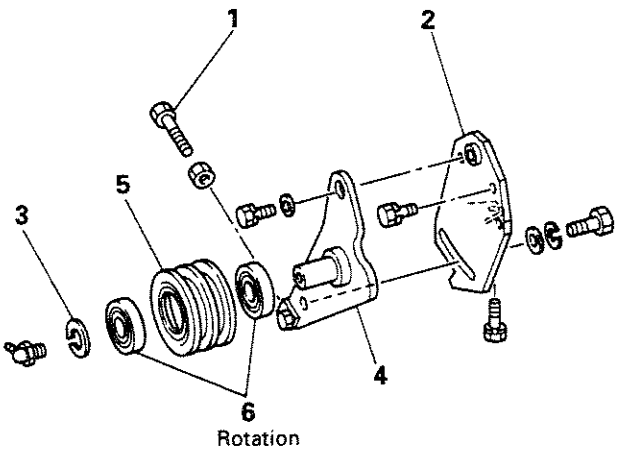

D0917B

<8DC9-T: Option, 9-TC >

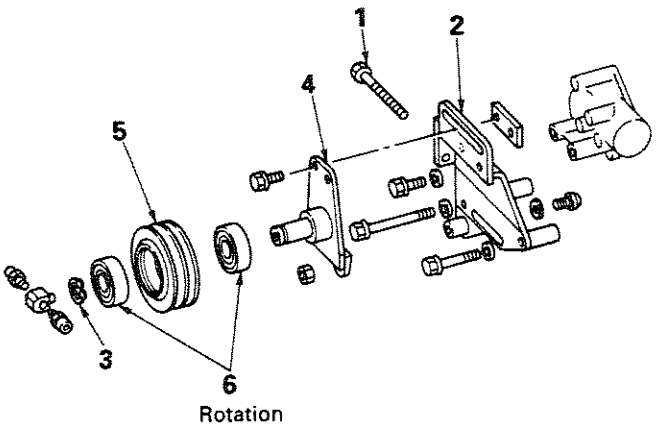

D0917C

Disassembly sequence

1 Adjusting bolt
2 Tension pulley bracket
3 Snap ring
4 Tension pulley shaft
5 Tension pulley
6 Bearing

5.7.2 Reassembly

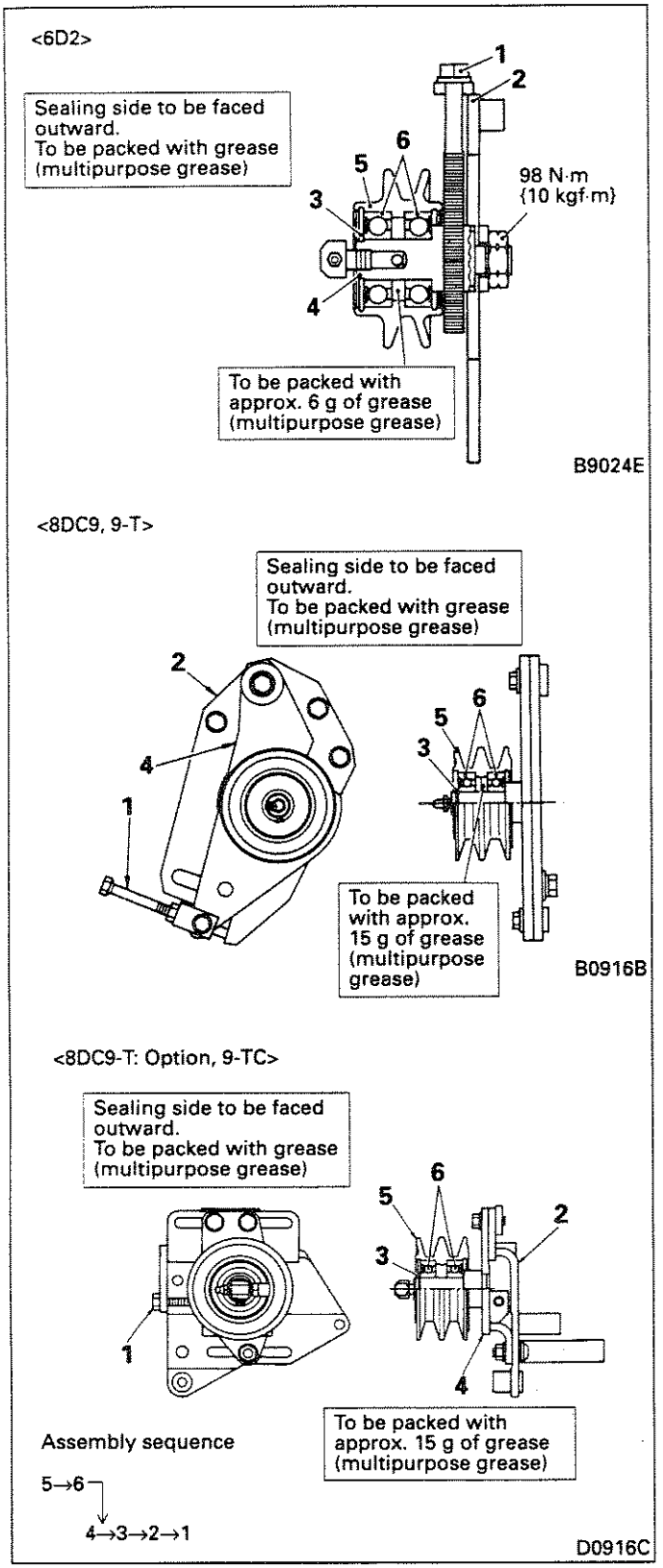

5.8 Inspection of Auto Cool Fan Coupling

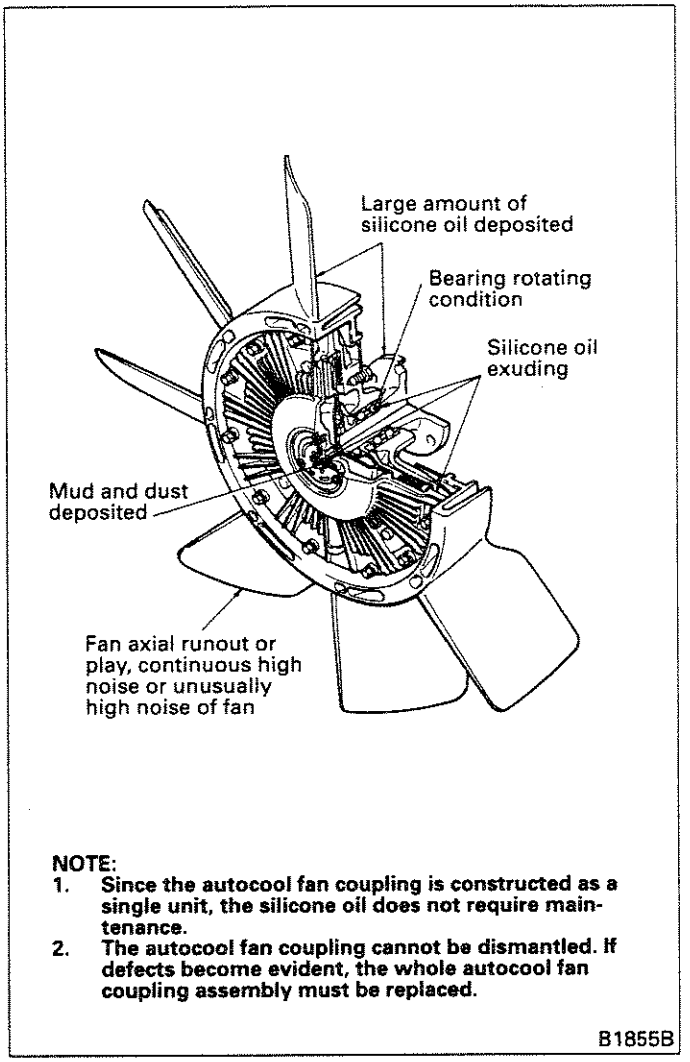

(1) Play in axial direction

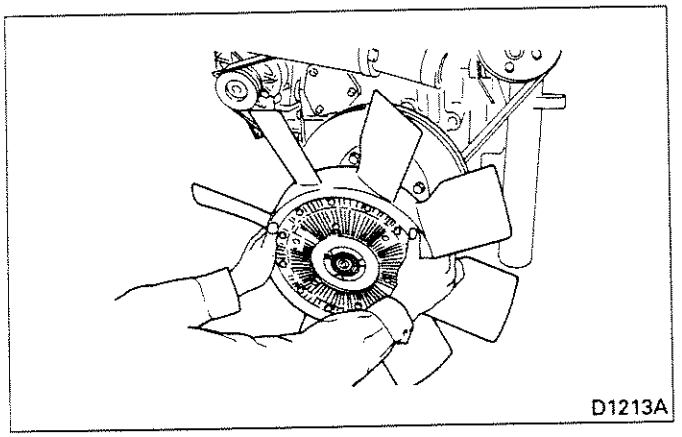

When engine is cold, pinch the fan fitting portion and move it in axial direction. If the fan blade tip has excessive runout or play is observed, replace the auto cool fan coupling, because the ball bearing is defective.

(2) Cleaning bimetal

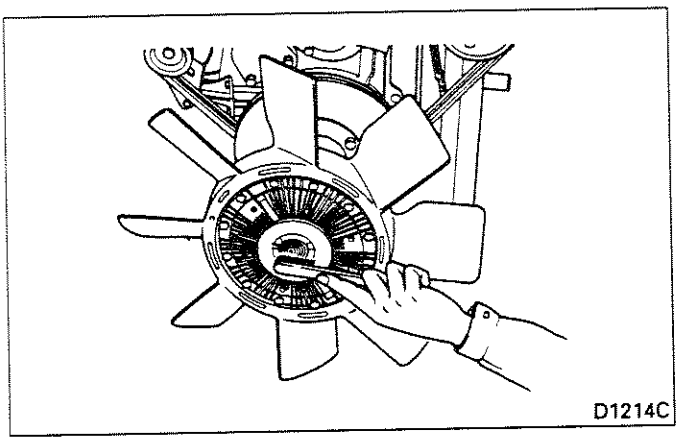

If dirt or dust is adhering to the bimetal, remove it carefully with a wire brush or the like.

NOTE:
Use care not to apply excessive force to the bimetal.

5.9 Inspection of Radiator

(1) Cleaning

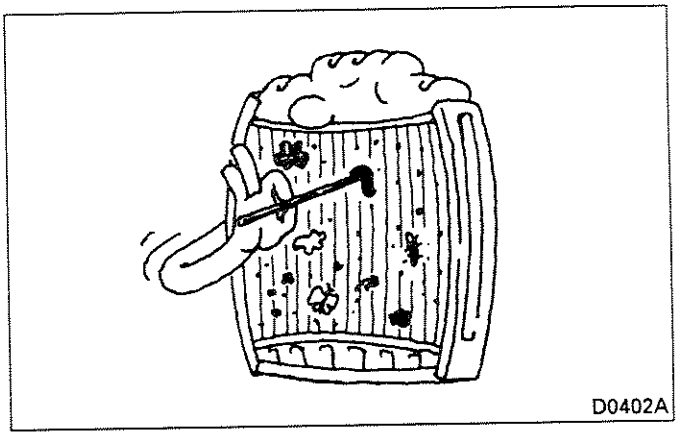

Remove mud, bugs, etc., if present on the radiator core front surface, with a copper wire. During the removal work, use care to prevent damage to the tubes.

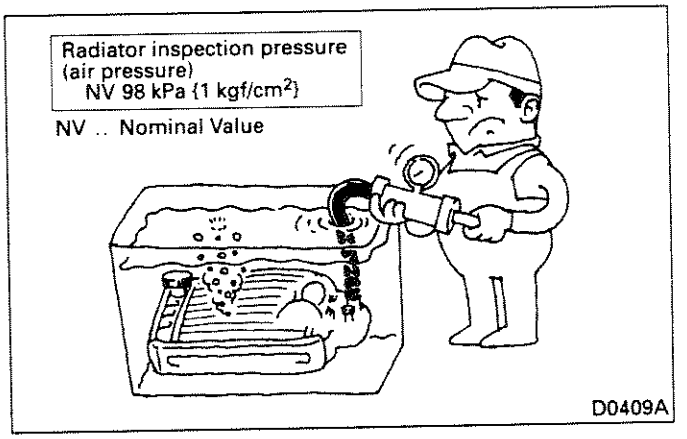

(2) Attach hose to the inlet of the radiator and cap the outlet. Then, immerse the radiator in a waterfilled tank.
Using a radiator cap tester, send compressed air at the specified inspection pressure through the hose to check for leaks.
If leaks are evident, re-solder or replace the radiator.

(3) Inspection of radiator cap

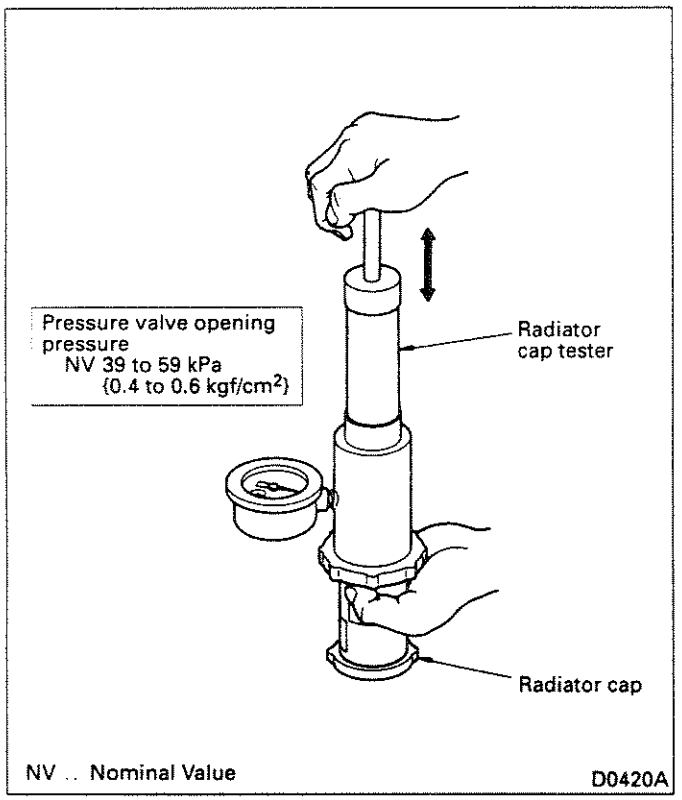

Check the spring tension and sealing condition of the pressure valve and vent valve. If defective, replace. Check the pressure valve opening pressure, using a radiator cap tester.

5.10 V-belt Tension

5.10.1 Inspection

Adjust the belt tension to obtain the specified belt deflection when the center of each belt is pressed with a force of approximately 98 N (10 kgf).

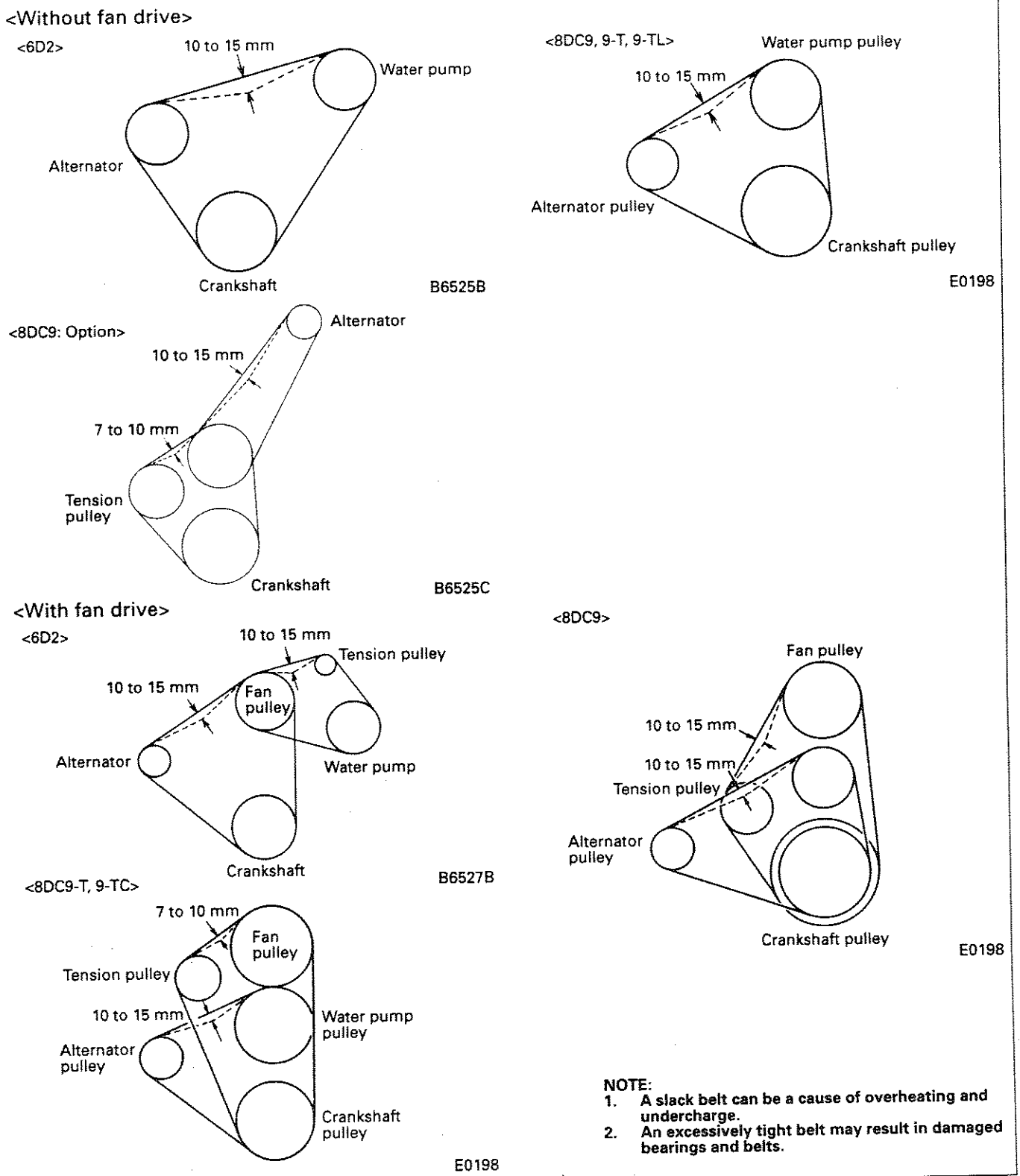

NOTE:
1. **A slack belt can be a cause of overheating and undercharge.**
2. **An excessively tight belt may result in damaged bearings and belts.**

5.10.2 Adjustment

<6D2>

(1) Alternator

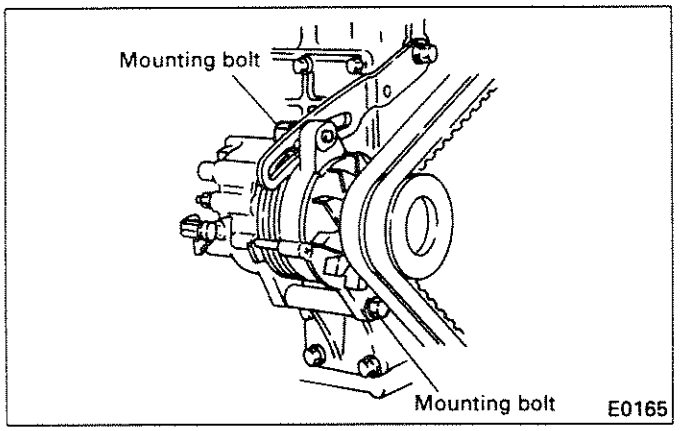

Loosen the upper and lower mounting bolts of the alternator. Then, fit a wrench handle and move the alternator as necessary.

NOTE:

When moving the alternator, use care not to damage the stator coil between the front and rear brackets, and the through bolt.

(2) Tension pulley

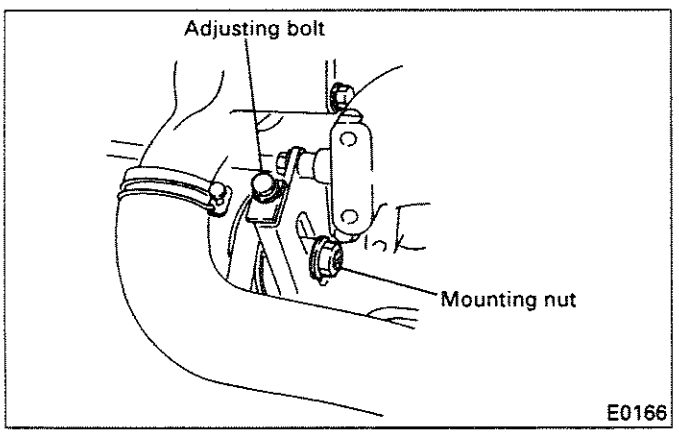

Loosen the idler puller mounting nut, then turn the adjusting bolt to adjust the belt tension. (Turning the adjusting bolt moves the idler pulley.)

<8DC>

(1) Alternator

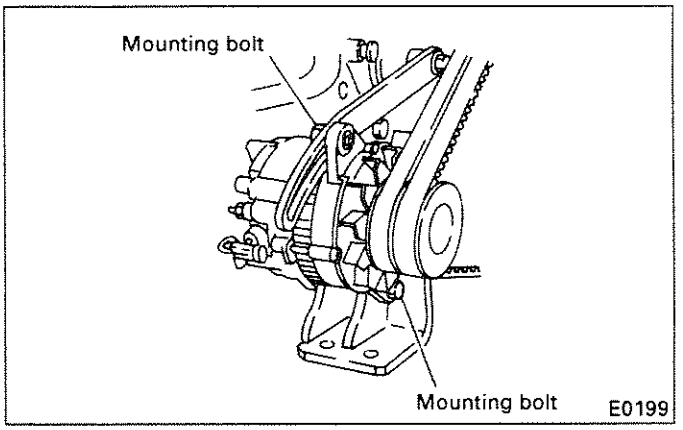

Loosen the upper and lower mounting bolts of the alternator. Then, fit a wrench handle and move the alternator as necessary.

NOTE:

When moving the alternator, use care not to damage the stator coil between the front and rear brackets, and the through bolt.

(2) Turnbuckle type

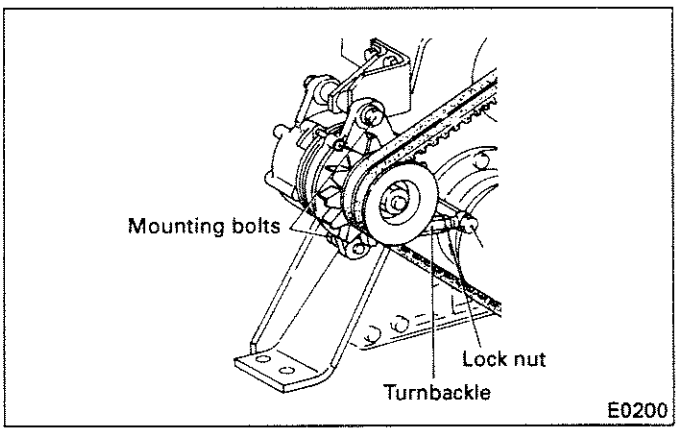

<8DC9: Option>

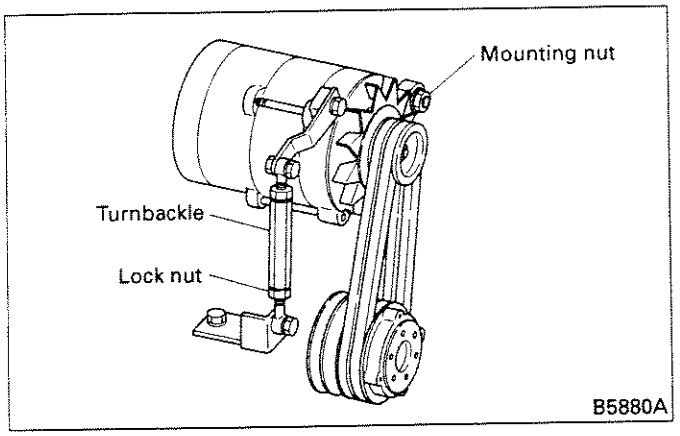

(a) Slightly loosen the alternator mounting bolt.
(b) Loosen the lock nut, then turn the turnbuckle as necessary. A more tension is given if the rod is longer.
(c) After the adjustment, hold the turnbuckle in position with a spanner to prevent it from turning while tightening the lock nut.

(3) Tension pulley

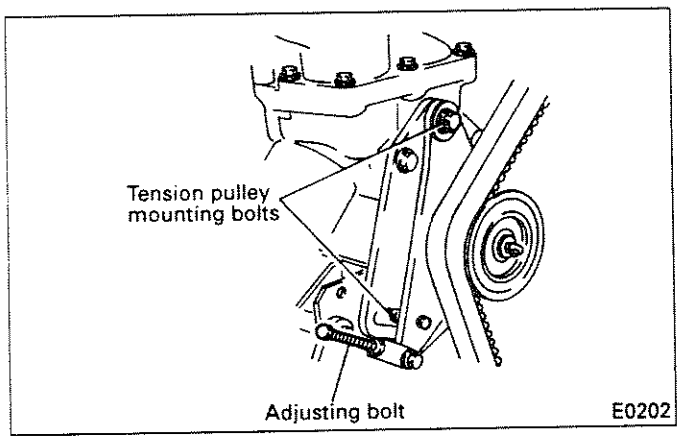

Loosen the tension pulley mounting bolts, then turn the adjusting bolt to move the tension pulley as required.

- Using Belt Tension Gauge (special tool)

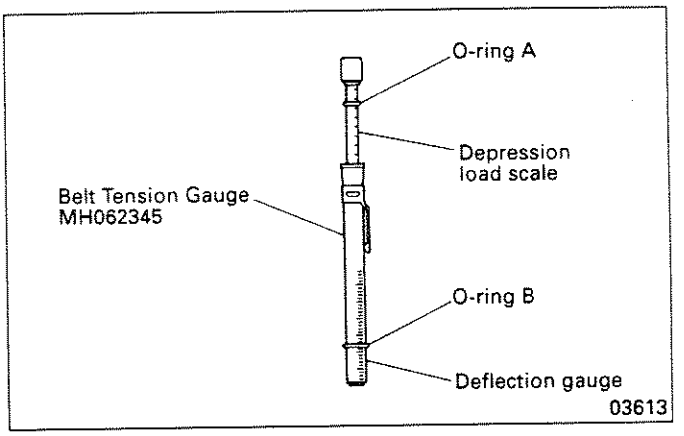

(1) Set O-ring A at the 98 N {10 kg} mark on the depression load scale.
(2) Set O-ring B at the V-belt's specified nominal deflection value (max.) on the lower scale.

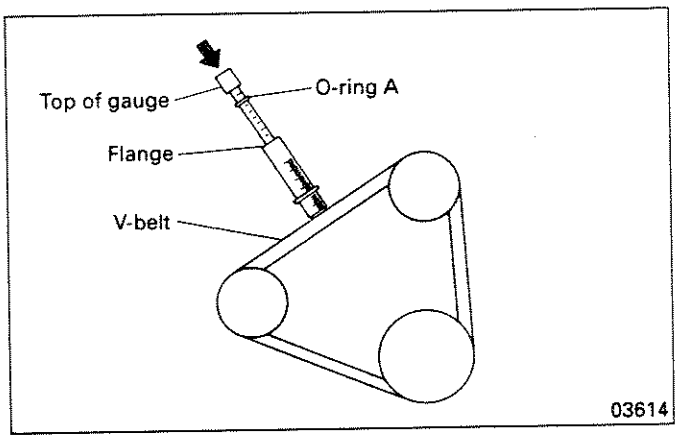

(3) Apply the Belt Tension Gauge (special tool) to the V-belt's tension measurement point. Depress the top of the gauge until O-ring A reaches the flange.

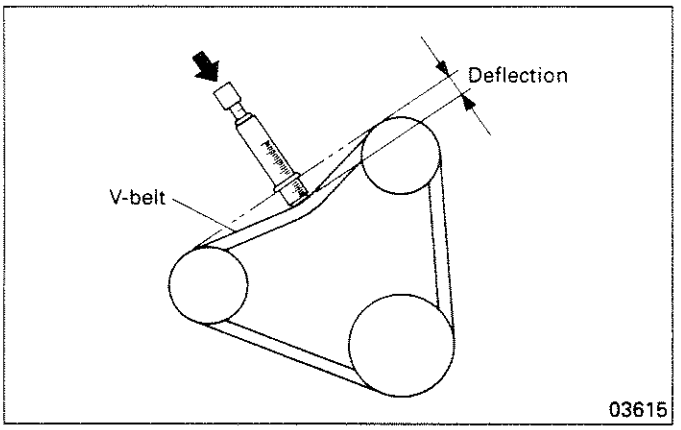

(4) Measure the amount of deflection in the V-belt. Adjust the V-belt's tension if the amount of deflection is out of specification.

5.11 Cleaning of Cooling System

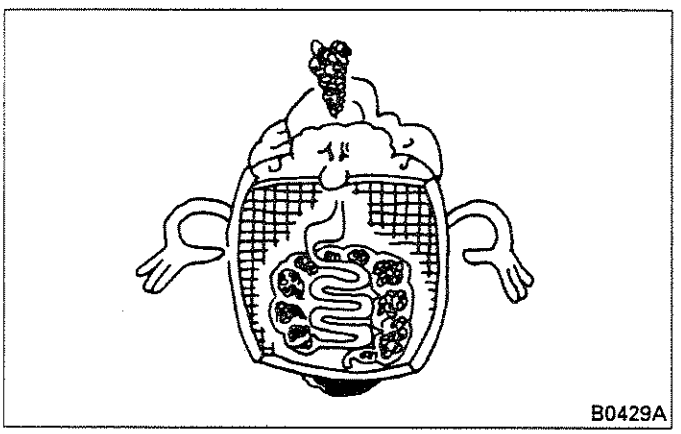

If the radiator is used for a long time, rust, scale, mud, etc. are deposited inside, resulting in overheat. Clean the cooling system with city water by using the following procedures.

NOTE:

1. **Use a cleaning solution if the radiator is seriously obstructed or coolant is seriously contaminated.**
2. **When the cooling system is cleaned or washed with water, make sure that the coolant temperature is maintained at 90°C; the coolant temperature below the valve opening temperature closes the thermostat, resulting in poor coolant circulation.**
3. **If much rust is found, water may leak from the radiator after cleaning. Check carefully each section of the radiator after cleaning.**
4. **If the coolant temperature is still very high, never attempt to remove the pressure cap.**

Coolant in use	Cleaning interval
FUSO Diesel Long Life Coolant	Every 2 years
Anti-rust, anti-freeze	At time of coolant replacement of every 6 months or before and after use of anti-freeze

(1) Washing with water

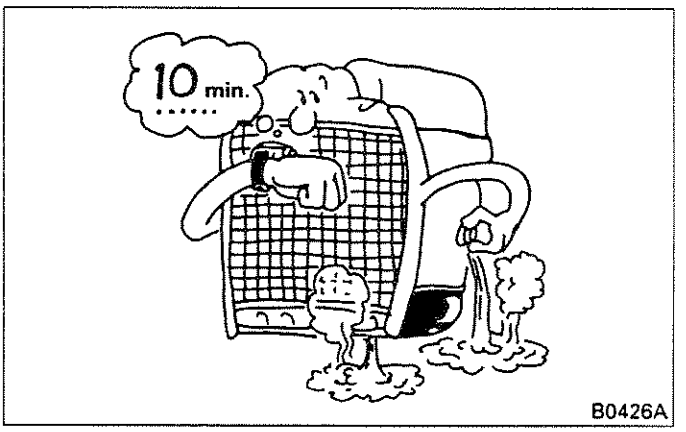

(a) Discharge coolant from the radiator, crankcase, and reserve tank.

(b) After draining the system, fill it with tap water (preferably hot water) and, with the water temperature kept at around 90°C, run the engine at idle for about 10 minutes. Then, drain water. Continue flushing until the drained water runs clear.

(2) Washing with cleaning solution (When radiator clogging or coolant contamination are serious)

(a) Discharge coolant from the radiator, crankcase, and reserve tank.

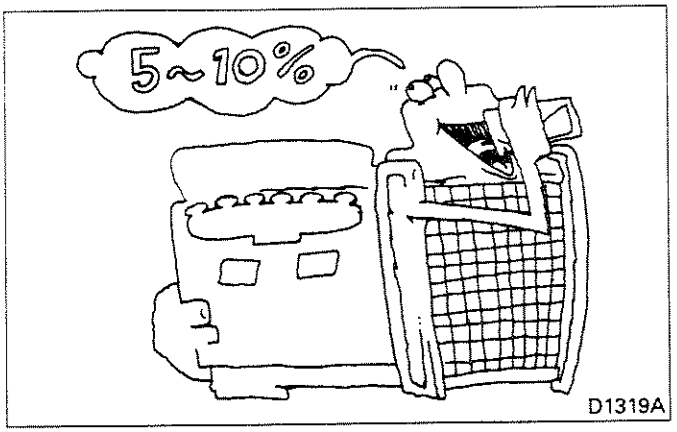

(b) Ready a mixture of FUSO Radiator Cleaner (Radi-pet-7 or equivalent: 5 to 10%) and cooling water. Pour the specified amount of mixture into the radiator.

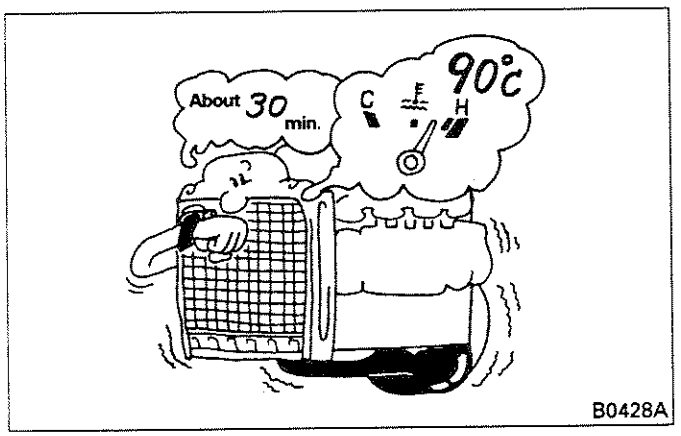

(c) Run the engine to raise the solution temperature to around 90°C. Let the engine run at idle for another 30 minutes, then remove the solution.

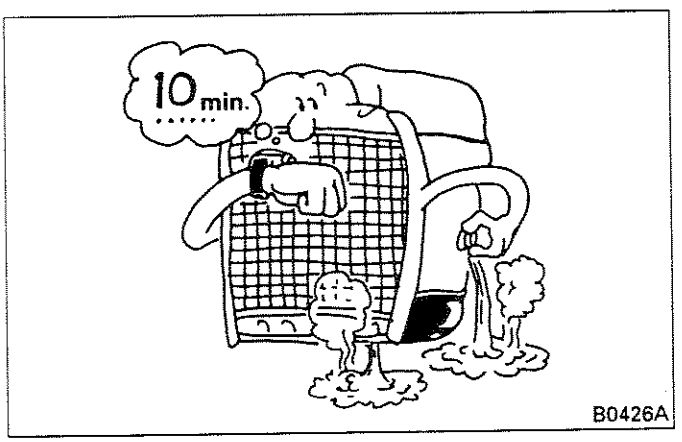

(d) After discharging the solution, fill the system with tap water (preferably hot water) and with the water temperature kept at around 90°C, run the engine at idle for about 10 minutes. Then, drain water. Continue flushing until drained water runs clear.

NOTE:

1. **If the inside is heavily stained, washing with tap water before charging radiator detergent will be effective.**
2. **Running the engine at idle for longer than an hour with detergent left in engine could cause damage to the cooling system. Be sure to observe specified cleaning time.**
3. **After cleaning with detergent, fill with coolant as soon as possible.**

(3) Cooling water

(a) When Long Life Coolant is used:

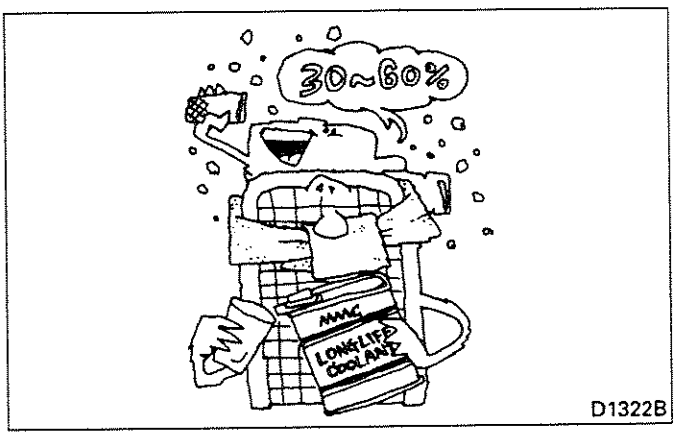

In order to prevent freezing of cooling water and corrosion of the cooling system, add FUSO Diesel Long Life Coolant at a ratio of 30 to 60% of quantity of water. Replace the coolant once every two years to retain its anti-freeze and anti-rust effects.
For usage of Long Life Coolant, refer to its instruction manual.

NOTE:

1. **Be sure to use FUSO Diesel Long Life Coolant.**
2. **Never mix it with DIAQUEEN Long Life Coolant or other commercial long life coolants, anti-freezes or anti-rusts.**

(b) When anti-rust and anti-freeze are used:

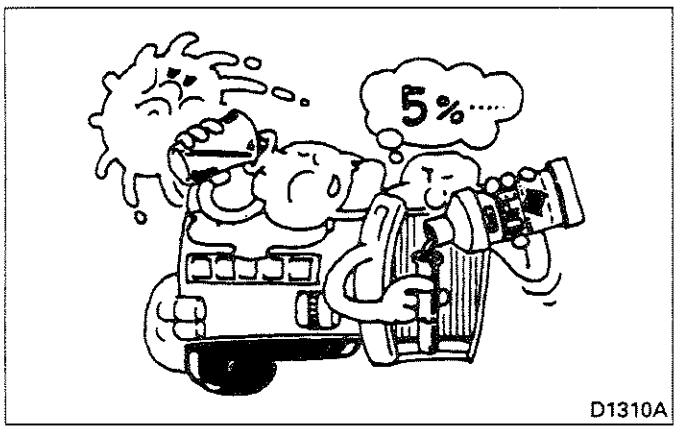

D1310A

1) After cleaning, add Fuso Radiator Anti-rust (Radi-pet-9B or equivalent) at a ratio of 5% to the coolant quantity to prevent corrosion in summer.

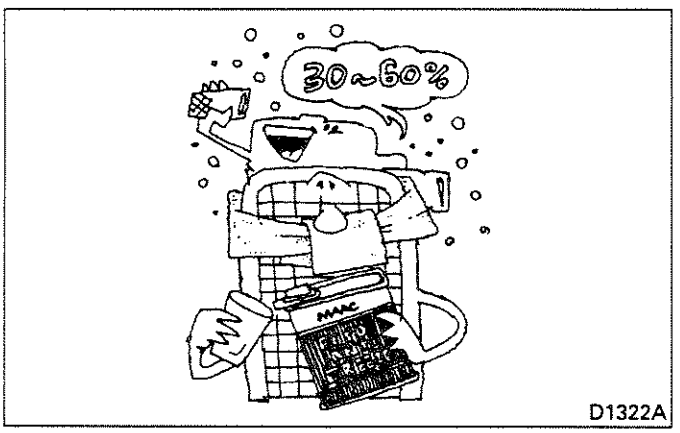

D1322A

2) In winter, add the Fuso Anti-freeze or equivalent at a ratio of 30 to 60% to prevent freezing.
For usage of anti-rust and anti-freeze, see respective instruction manuals.

NOTE:
When the anti-rust or anti-freeze is used, never use with other long life coolants.

5.12 Gas Leak Test

Air or exhaust gas leaked into the coolant promotes corrosion and rust formation. Perform the following check and, if defects are found, take remedial action.

(1) Inspection

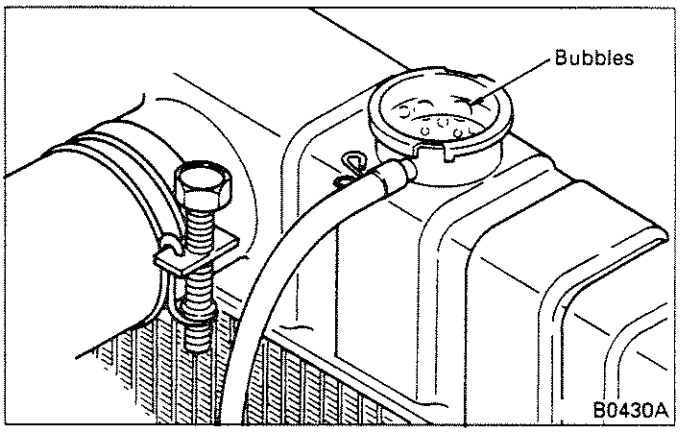

B0430A

(a) Remove the pressure cap from the radiator.
(b) Run the engine to raise the coolant temperature up to around 90°C.
(c) If bubbles continue forming in the coolant under the condition, it indicates that air or exhaust gas has leaked into the coolant.

(2) Causes

(a) If air is trapped in coolant, check cylinder head bolts, water pump mounting bolts, and hose and its connections for looseness. Check also hoses for damage.
(b) If the exhaust gas has leaked into coolant, check the cylinder head gasket or nozzle tube end stake for damage. Check also cylinder head for cracks.

5.13 Bleeding the Cooling System

(1) With the pressure cap removed from the radiator, let the engine run at idle with coolant temperature of about 90°C to bleed the system completely.
(2) After the system has been bled of air, add coolant to radiator and reserve tank as required.

6. TROUBLESHOOTING

Symptom	Probable cause	Remedy	Ref. group
Overheat	Defective V-belt • Incorrect tension	Adjust	
	• Broken belt	Replace	
	Clogged cooling system	Clean	
	Defective thermostat	Replace	
	Defective water pump • Loose shaft to impeller engagement	Replace	
	• Loose shaft to flange engagement	Replace	
	• Improper clearance between impeller and water pump case	Correct	
	• Damaged impeller	Replace	
	Clogged radiator fins	Clean	
	Defective autocool fan coupling <8DC9-TL> • Damaged bimetal	Replace	
	• Clogged bimetal	Clean	
	• Defective autocool fan coupling proper	Replace	
	Damaged cooling fan	Replace	
	Low coolant level	Replenish	
Overcool	Defective thermostat	Replace	
Quick loss of coolant	Defective radiator hose • Loose hose connection	Correct	
	• Worn or damaged hose	Replace	
	Defective radiator • Radiator proper not tight	Correct or replace	
	• Pressure cap not tight	Replace	
	Defective water pump • Defective unit seal	Replace	
	• Defective oil seal	Replace	
	• Pump mounted improperly	Correct	
	Defective oil cooler	Replace	Group 12
	Thermostat case or cover mounted improperly	Correct	
	Defective heater hose • Loose hose connection	Correct	
	• Worn or damaged hose	Replace	
	Defective cylinder head gasket	Replace	Group 11

INTAKE AND EXHAUST

CONTENTS

1. GENERAL 2
2. SPECIFICATIONS 7
3. SERVICE STANDARDS 8
3.1 Service Standards Table 8
3.2 Tightening Torque Table 9
4. SPECIAL TOOLS 10
5. SERVICE PROCEDURE 11
5.1 Removal and Installation of Intake System 11
5.2 Removal and Installation of Exhaust System 19
5.3 Air Cleaner 24
5.3.1 Disassembly and reassembly 24
5.3.2 Inspection and cleaning 25
5.4 Turbocharger 26
5.4.1 TD08 type turbocharger 26
5.4.2 4LF type turbocharger 36
5.4.3 3LM type turbocharger 42
5.5 Intercooler 47
5.5.1 Disassembly and reassembly 47
5.5.2 Air pressure test 48
5.6 Bleeding of Aftercooler Coolant Circuit 49
6. TROUBLESHOOTING 50

1. GENERAL

(1) Air cleaner

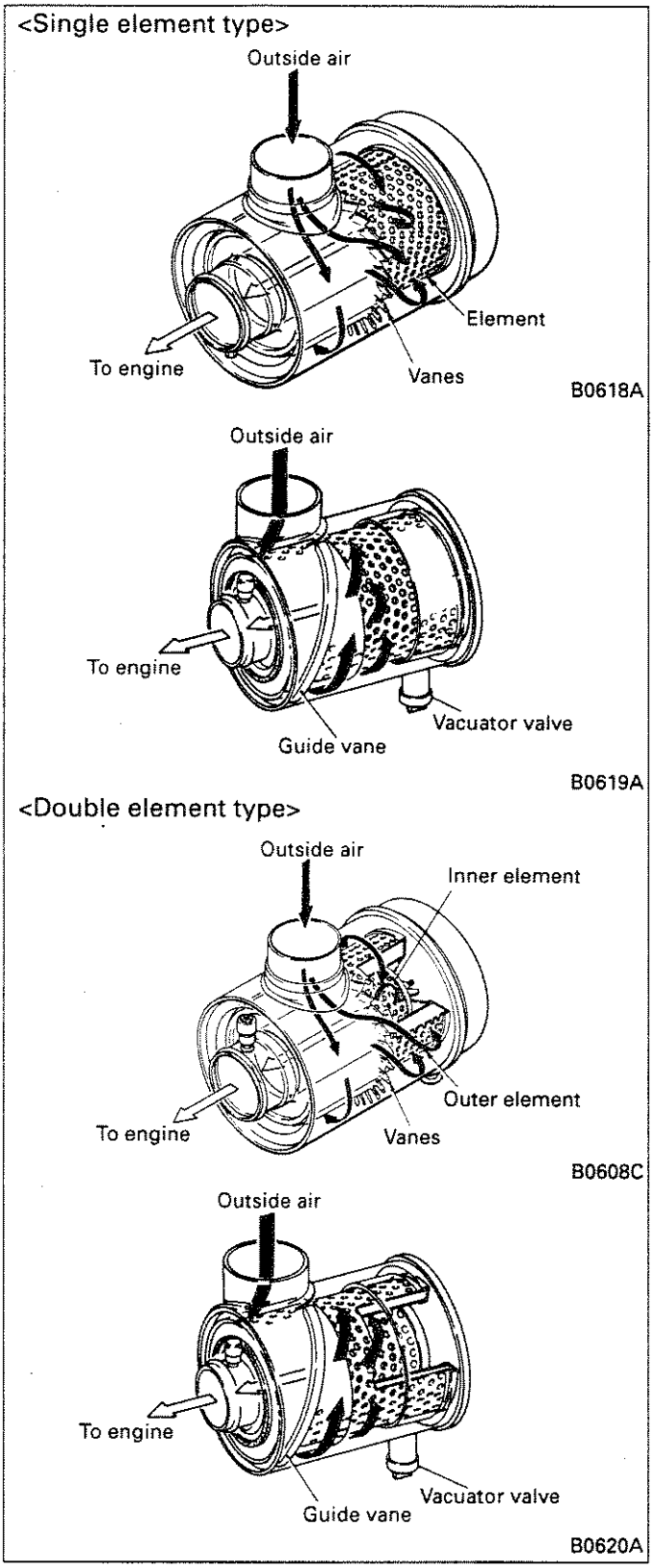

The cyclone type air cleaner uses a filter paper type element.

Because of plastic coating and heat treatment, the element is highly resistant to water and oil. Even if it is contaminated, its functions can be regained by cleaning.

The intake air is given a spin by the vanes for centrifugal separation of large particles of dust and dirt. Small particles of dust and dirt are filtered out by the filter paper element so that a clean air is drawn into the engine.

The standard air cleaner is a single element type, and the double element type can be effective for operation safety under unusual conditions with a lot of dust and dirt.

(2) Precleaner

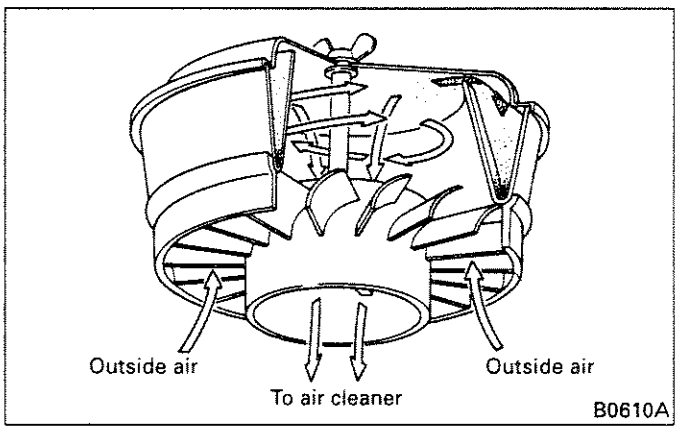

The precleaner, coupled with the air cleaner, collects relatively large particles of dust contained in the air drawn in by engine.

The air entering the precleaner is made to spin by the guide vanes of the precleaner to centrifugally separate large particles of dust before the air is drawn into the air cleaner. These dusts are collected in the precleaner.

(3) Vacuator valve

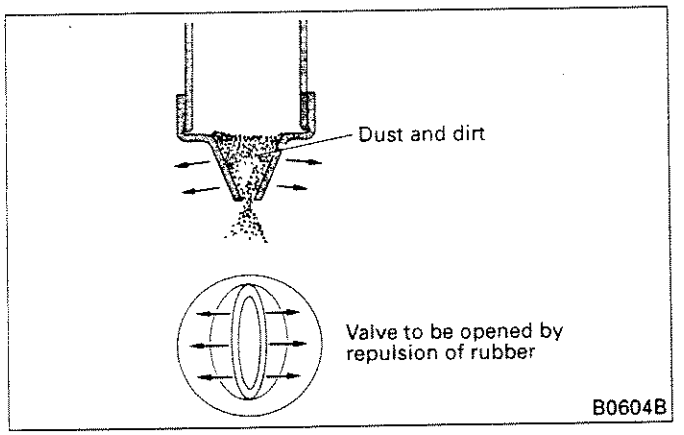

Centrifuged dust collects at the bottom of the air cleaner. A vacuator valve made of rubber is mounted to the bottom, which pulsates to automatically discharges dust and water when the engine speed is below about 800 rpm. Namely when the engine is running at a speed higher than 800 rpm, the negative pressure in the air cleaner keeps this valve closed but when the negative pressure drops as the engine speed decreases, the valve is made to open by rubber action, thereby discharging dust and water.

(4) Dust indicator

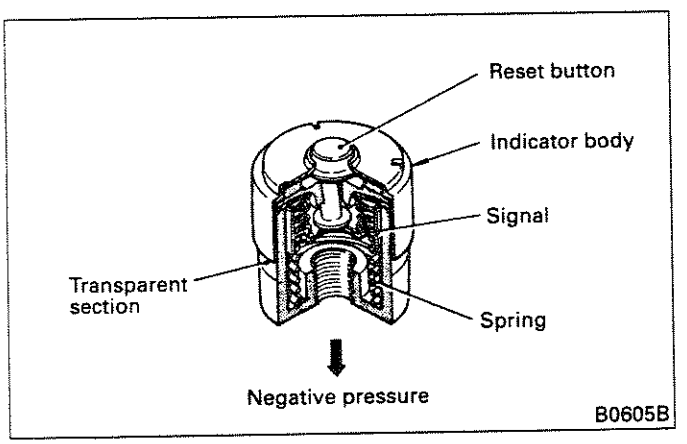

The dust indicator is mounted near the outlet of the air cleaner.

The dust indicator operates on the negative pressure of the air drawn into the engine performing the function of indicating the time to clean or replace the element. When the element is plugged with dust and dirt, the suction resistance increases. When this vacuum reaches 6.2 kPa {635 mmH_2O}, the signal (red) is pulled down against the spring tension. The signal (red) is then visible through the transparent section in the body, indicating that it is time to clean or replace the element.

After the element has been cleaned or replaced, depress the reset button on the top, and the signal will return to its original position.

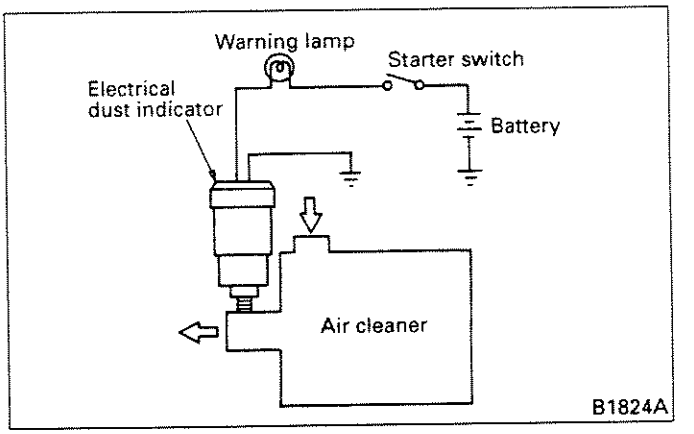

With the electric dust indicator, its electric contact points close when the vacuum reaches 6.2 kPa {635 mmH_2O}. This turns on the warning lamp, warning the driver that it is time to clean or replace the element.

(5) Turbocharger

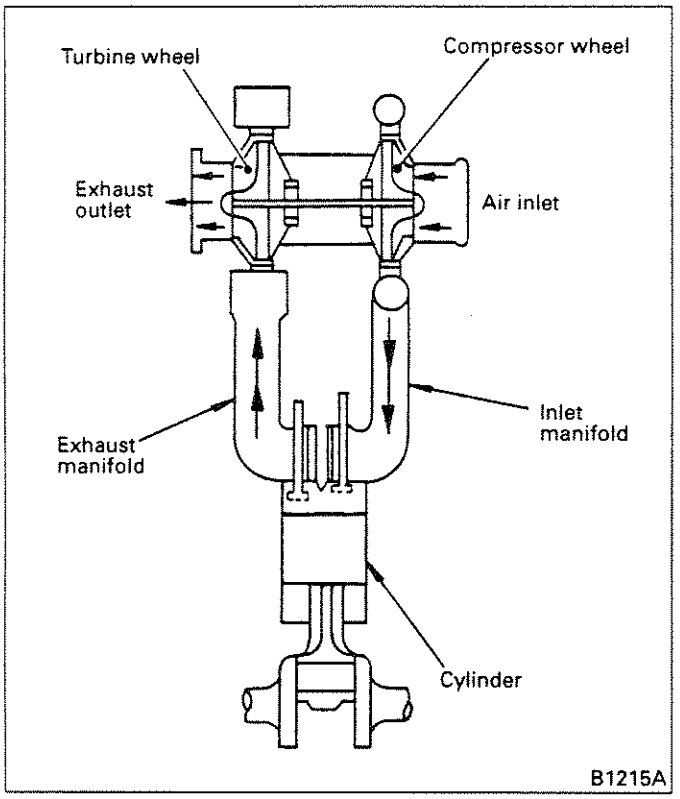

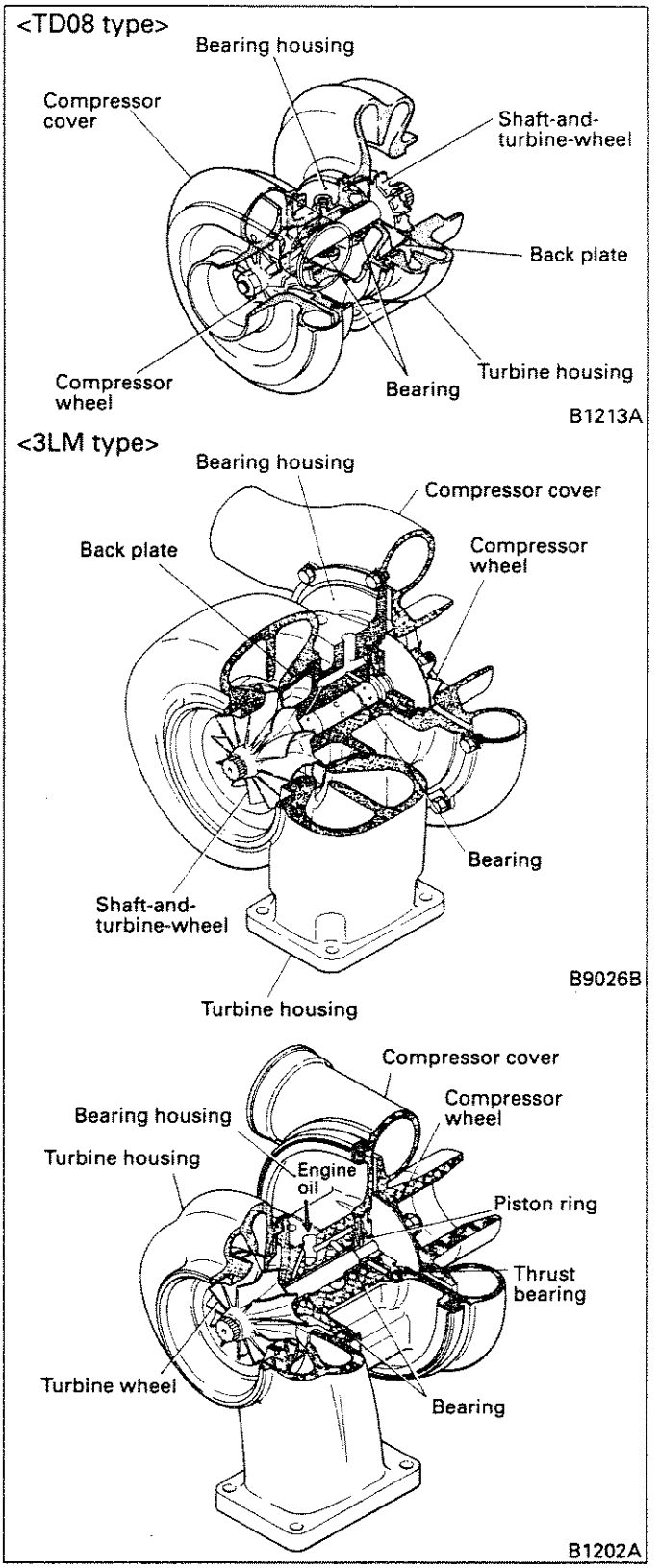

The turbocharger utilizes the energy of the engine exhaust gas to feed more air into the engine, thereby offering advantages such as boosted engine power output, thrifter fuel consumption, and reduced engine noise.

The exhaust gases discharged from the cylinder of the engine are led through the exhaust manifold into the turbocharger and are accelerated in the turbine housing and are blown against the turbine wheel.

Accordingly, the turbine is made to rotate at a speed of scores of thousands of revolutions a minute, and turns the compressor wheel mounted on the same shaft as the turbine wheel. By rotation of the compressor wheel, a larger amount of air than without supercharging is forced into the cylinder of the engine, so a correspondingly larger amount of fuel can be burnt. This increases the effective pressure during combustion (the pressure forcing the piston down) and thus increases the output.

The turbocharger can be divided into three basic sections: the turbine wheel that is driven by the exhaust gases, the compressor wheel which forces intake air into cylinders and the bearing housing which supports the shaft of these wheels.
The shaft connecting the turbine wheel with the compressor wheel is supported in floating type bearings, which absorb vibrations during high speed operation that are caused by slight imbalance of the shaft.
The shaft axial load is borne by the thrust bearing.
The bearing housing has its inside cooled and lubricated by engine oil to prevent seizure and other troubles of the sliding parts.
(Refer to Group 12 Lubrication.)

(6) Aftercooler

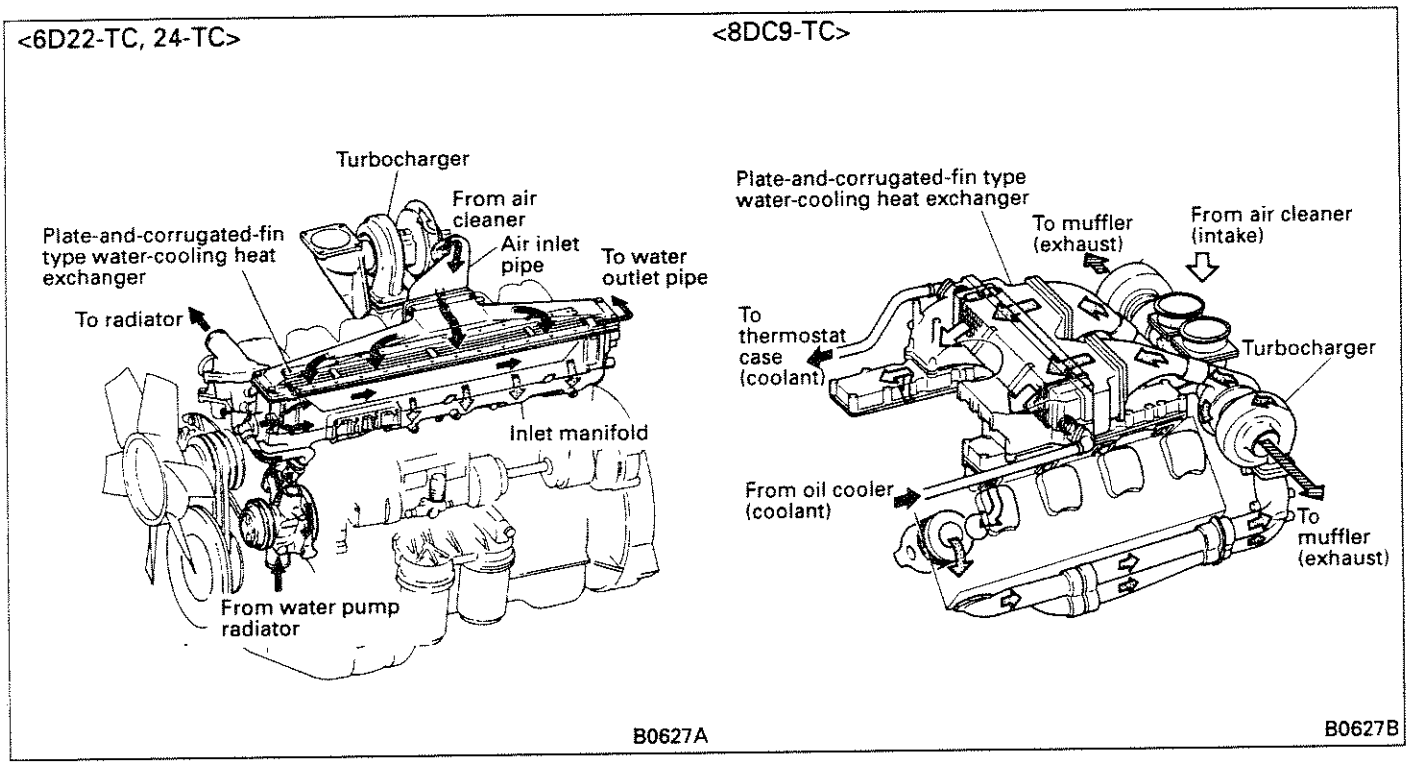

The intake air cooling system, incorporating a plate-and-corrugated-fin type heat exchanger, transfers heat from the intake air to the engine coolant. It has the same function as the intercooler on automobile engines.
The system cools off the intake air, whose temperature has gone high due to compression by the turbocharger, through heat exchanging with the engine coolant. This allows the density of intake air to be increased, admitting more air into the engine, which in turn increases the fuel injection rate and improves the combustion efficiency. Thus the fuel economy and output are improved and the exhaust gases are reduced to a minimum.

<8DC9-TL>

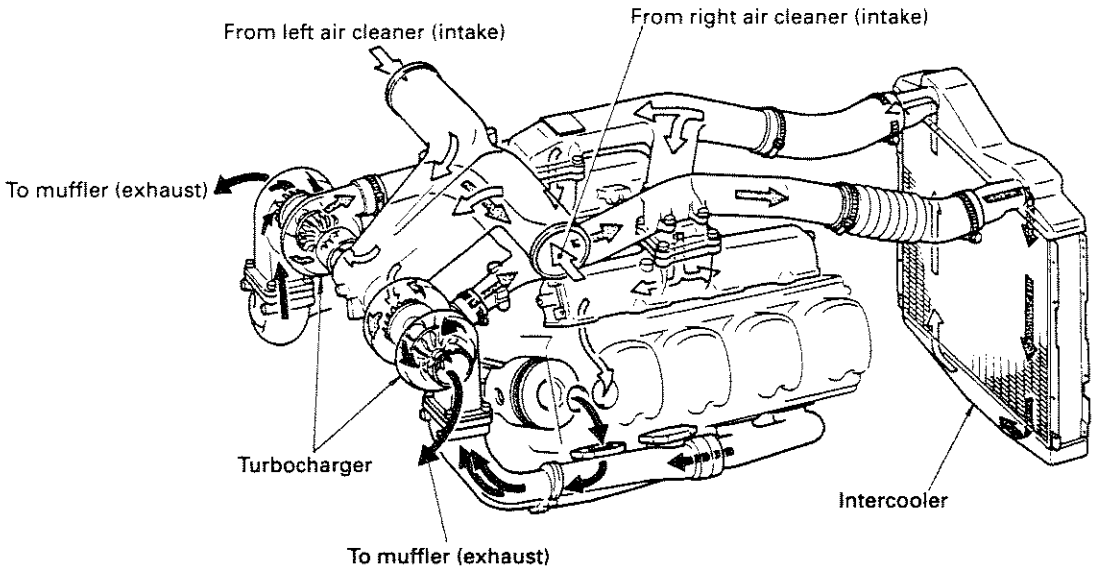

B4127B

The intercooler is an air-to-air tube-and-corrugated-fin type heat exchanger installed at the front of the radiator.

The temperature of the intake air becomes very high when it is compressed by the turbocharger. This air cooled at the intercooler through heat exchanging with the outside air to increase its density before it is sent to the cylinders. This improves combustion efficiency, which in turn results in a greater fuel economy and power output with a reduced amount of harmful exhaust gases.

2. SPECIFICATIONS

Item	Model	6D22, 8DC8, 8DC9	6D22-T	6D22-TC	6D24-T	6D24-TC	8DC9-T	8DC9-TC	8DC9-TL
Air cleaner element	Type	Cyclone type paper element (Nippon Donaldoson Ltd. products)							
Supercharger	Type	–	Turbocharger						
	Model	–	Mitsubishi TD08 <Option> Mitsubishi Schwitzer 3LM or 4LF	Mitsubishi TD08 <Standard> Mitsubishi TD08H <Option>	Mitsubishi TD08H	Mitsubishi TD08			
Aftercooler	Type	–		Plate and corrugated fin type, water-cooling (built in the inlet manifold, cooled by the engine coolant)		Plate and corrugated fin type, water-cooling (built in the inlet manifold, cooled by the engine coolant)	–	Plate and corrugated fin type, water-cooling (built in the inlet manifold, cooled by the engine coolant)	Tube-and-corrugated-fin type, air-cooling
	Model	–							C70

3. SERVICE STANDARDS

3.1 Service Standards Table

Unit: mm

Maintenance item			Nominal value (Basic diameter in [ ])	Limit	Remedy and remarks
Dust indicator operating resistance			6.2 ± 0.6 kPa {635 ± 58 mmH_2O}	–	Replace
Turbocharger (TD08, TD08H)	I.D. of section in bearing housing receiving bearing		–	20.506	Replace
	Shaft-and-turbine-wheel	Bearing journal O.D.	–	11.996	Replace
		Shaft runout	–	0.015	Replace
	Bearing	O.D.	–	20.382	Replace
		I.D.	–	12.042	
		Length	–	11.94	
	Piston ring end gap in insert		0.05 to 0.25	–	Replace
	Shaft-and-turbine-wheel to turbine housing clearance		0.39 to 1.0	–	Replace
	Compressor wheel to compressor cover clearance		0.08 to 0.28	–	Replace
	Shaft-and-turbine-wheel axial play		0.075 to 0.155	–	Replace
	Shaft-and-turbine-wheel to turbine back plate clearance		0.48 to 0.92	–	Replace
Turbocharger (3LM)	Bearing inserting portion I.D.		–	19.06	Replace
	Shaft-and-turbine-wheel	Bearing journal O.D.	–	11.18	Replace
		Shaft runout	–	0.015	
	Piston ring end gap in insert		0.015 to 0.18	–	Replace
	Shaft-and-turbine-wheel to turbine housing clearance		0.53 to 1.04	–	Replace
	Shaft-and-turbine-wheel axial play		0.05 to 0.13	–	Replace
	Shaft-and-turbine-wheel to turbine back plate clearance		0.74 to 1.55	–	Replace
Turbocharger (4LF)	Bearing housing	Bearing inserting portion I.D.	–	22.268	Replace
		Piston ring inserting portion I.D.	–	22.5	
	Shaft-and- turbine-wheel	Piston ring groove width	–	1.68	Replace
		Bearing journal O.D.	–	14.254	
		Shaft runout	–	0.015	
	Piston ring groove width in flinger sleeve		–	3.3	Replace
	Shaft-and-turbine-wheel to turbine housing clearance		0.84 to 1.75	–	Replace
	Shaft-and-turbine-wheel axial play		0.08 to 0.152	–	Replace
	Shaft-and-turbine-wheel to turbine back plate clearance		0.43 to 1.05	–	Replace
	Compressor cover to compressor wheel diametric clearance		0.15	–	Replace
	Shaft-and-turbine-wheel to turbine housing diametric clearance		0.15	–	Replace
	Piston ring end gap in insert		0.026 to 0.102	–	Replace
Aftercooler	Core assembly air-tightness	6D22-TC, 24-TC	No leak is allowed with a 195 kPa {2 kgf/cm^2} air pressure	–	Replace
	Element assembly air-tightness	8DC9-TC	No leak is allowed with a 390 kPa {4 kgf/cm^2} air pressure	–	
	Intercooler air-tightness	8DC9-TL	No leak is allowed with a 145 kPa {1.5 kgf/cm^2} air pressure	–	

3.2 Tightening Torque Table

Location tightened		Screw size O.D. x pitch (mm)	Tightening torque N·m {kgf·m}	Remarks
Inlet manifold mounting bolt <except 6D22-TC, 24-TC>		M10 x 1.5	35 {3.6}	
Exhaust manifold mounting bolt		M10 x 1.25	41 {4.2}	
Turbocharger mounting nut	Mounting nut	M10 x 1.25	26 {2.7}	
	Lock nut	M10 x 1.25	35 {3.6}	
Turbocharger (TD08, TD08H)	Coupling mounting nut	–	5.9 {0.6}	Apply MOLY-KOTE grease to threads.
	Shaft-and-turbine-wheel mounting lock nut	–	20 {2}	
Turbocharger (4LF)	V-clamp mounting nut	–	11 {1.1}	Apply MOLY-KOTE grease to threads.
	Shaft-and-turbine-wheel mounting lock nut	–	27 {2.8}	
Turbocharger (3LM)	Shaft-and-turbine-wheel mounting lock nut	–	17 to 20 {1.73 to 2.07}	
	Compressor cover mounting cap screw	–	6.9 {0.7}	
	Turbine housing mounting cap screw	–	17 {1.7}	

4. SPECIAL TOOLS

Unit: mm

Tool name	Shape
Socket <6D2> MH061242 For exhaust manifold attaching nut	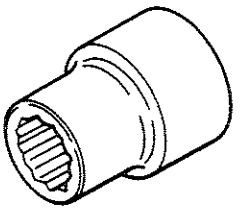 Width across flats 14 B5341A

5. SERVICE PROCEDURE

5.1 Removal and Installation of Intake System

<6D22>

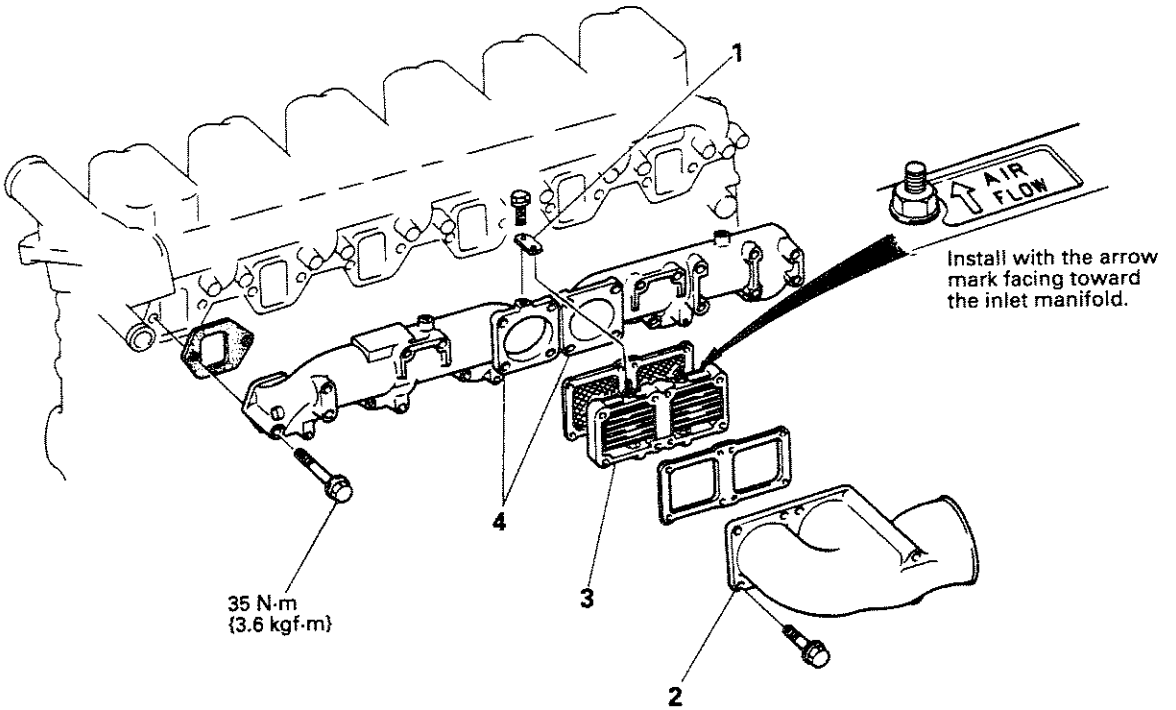

1 Ground plate
2 Inlet pipe
3 Air heater
4 Inlet manifold

NOTE:
1. **Remove harnesses before disassembly.**
2. **Ensure that the arrow points in the correct direction when installing the air heater.**
3. **For details of air heater inspections, refer to Group 16.**

B4556A

<6D22-T, 24-T>

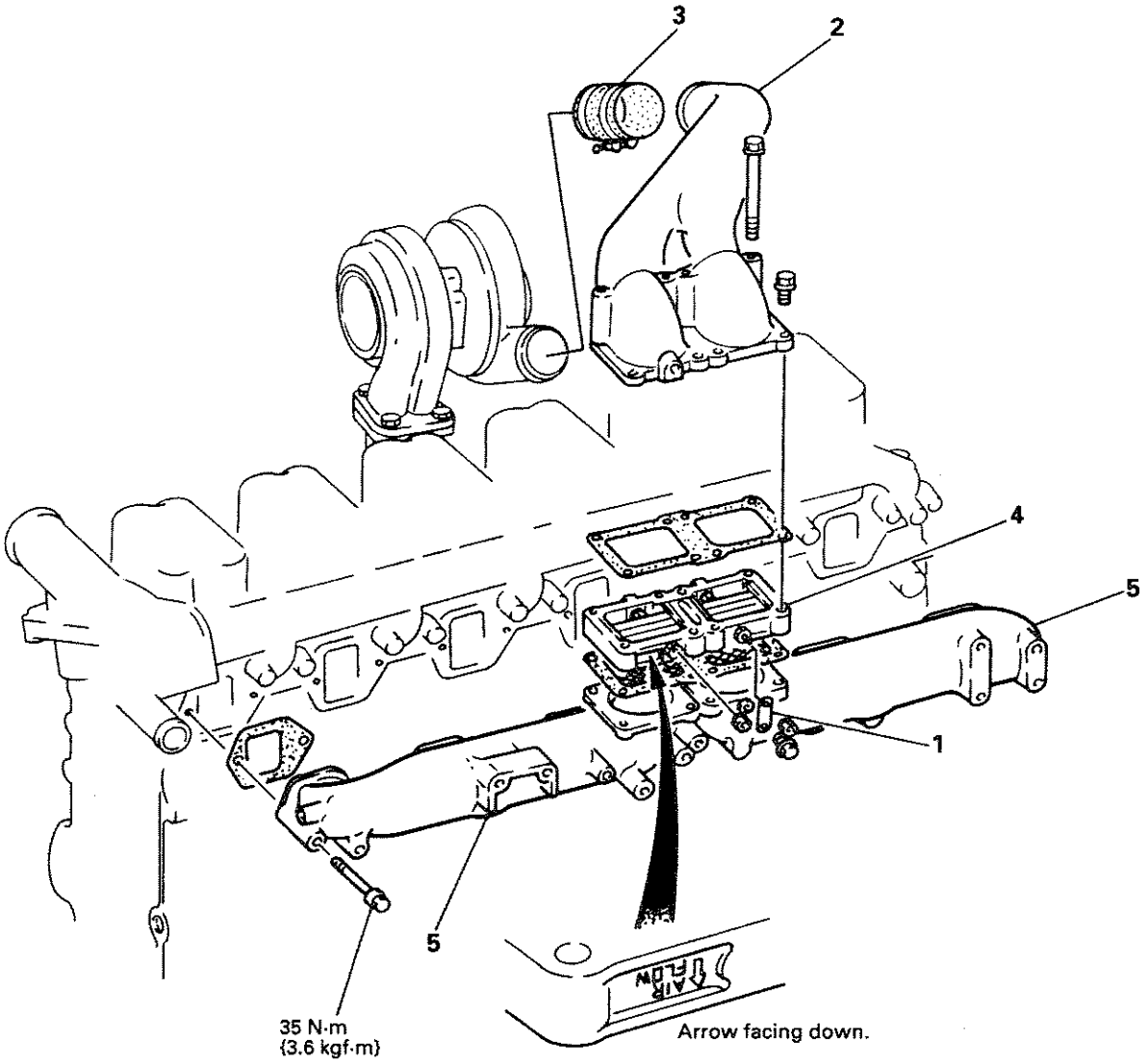

1 Ground plate
2 Inlet pipe
3 Rubber hose
4 Air heater
5 Inlet manifold

NOTE:
1. **Remove harnesses before disassembly.**
2. **Ensure that the arrow points in the correct direction when installing the air heater.**
3. **For details of air heater inspections, refer to Group 16.**

B4557A

<6D22-TC, 24-TC: Standard>

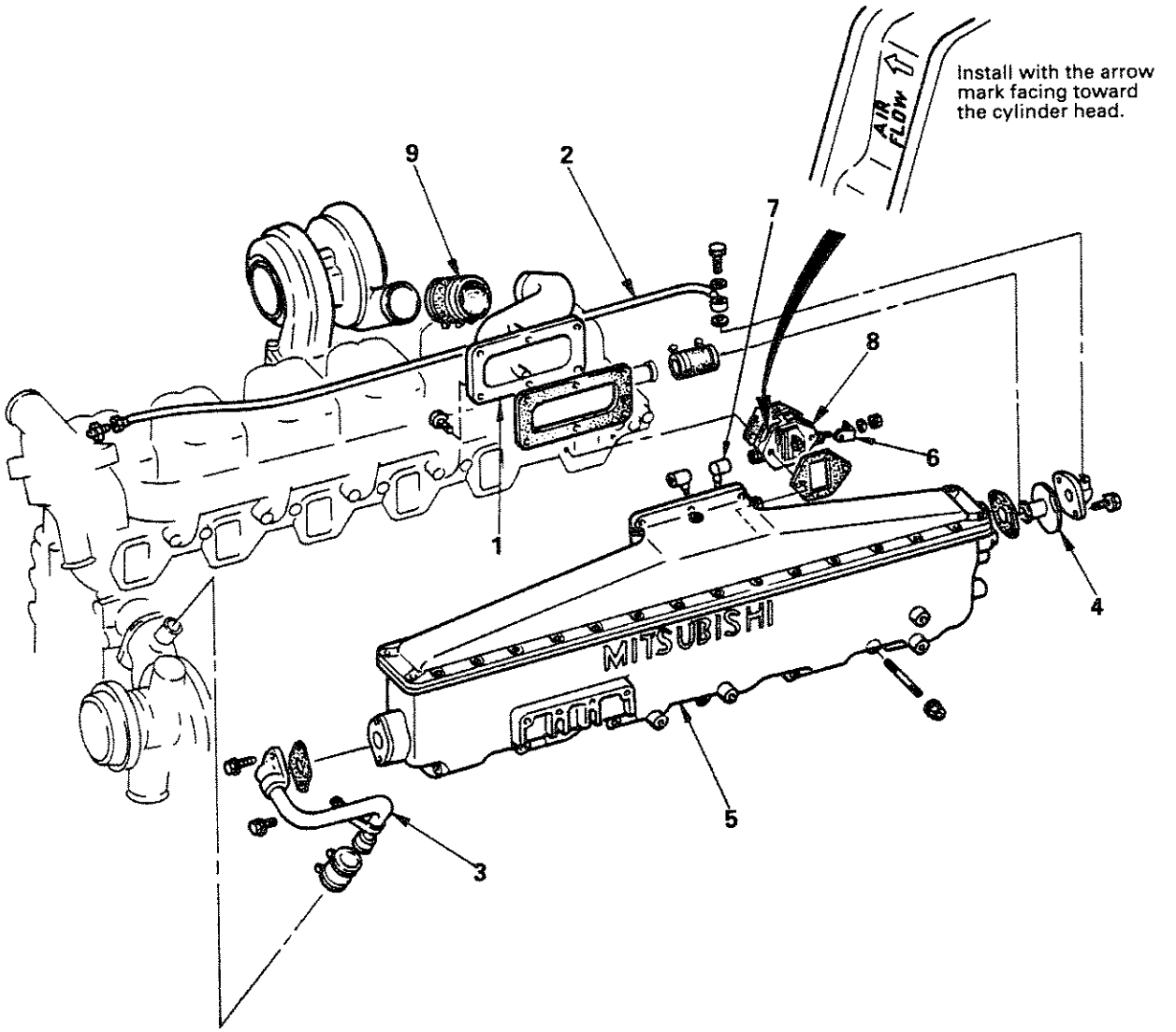

1 Inlet pipe
2 Air escape pipe
3 Water inlet pipe
4 Water return pipe
5 Air cooler assembly
6 Ground plate
7 Heater harness
8 Air heater
9 Rubber hose

NOTE:
1. **Remove harnesses before disassembly.**
2. **Ensure that the arrow points in the correct direction when installing the air heater.**
3. **For details of air heater inspections, refer to Group 16.**

B4558C

<6D22-TC, 24-TC: Low profile type>

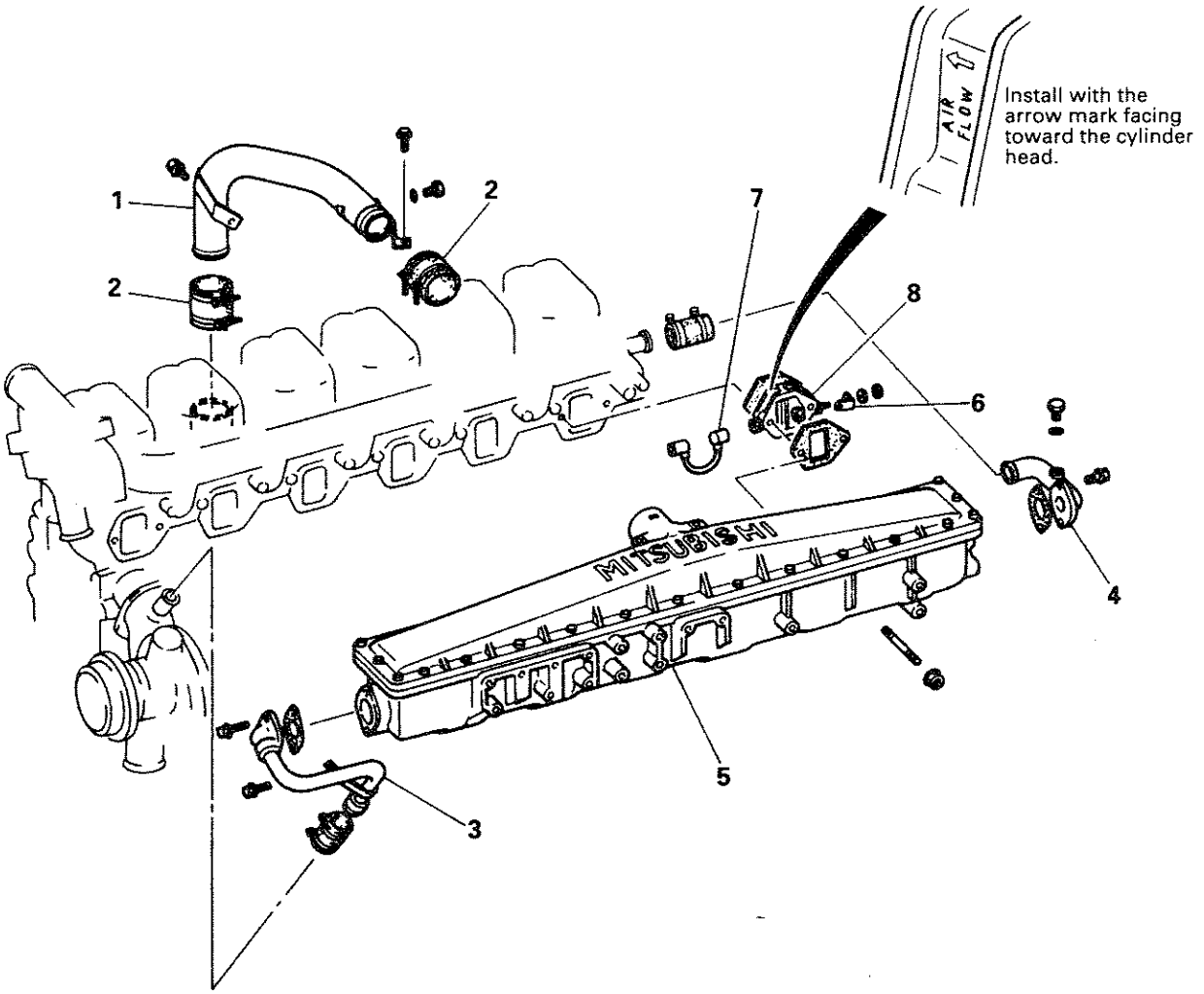

1 Inlet pipe
2 Rubber hose
3 Water inlet pipe
4 Water return pipe
5 Air cooler assembly
6 Ground plate
7 Heater harness
8 Air heater

NOTE:
1. **Remove harnesses before disassembly.**
2. **Ensure that the arrow points in the correct direction when installing the air heater.**
3. **For details of air heater inspections, refer to Group 16.**

B4558D

<8DC9>

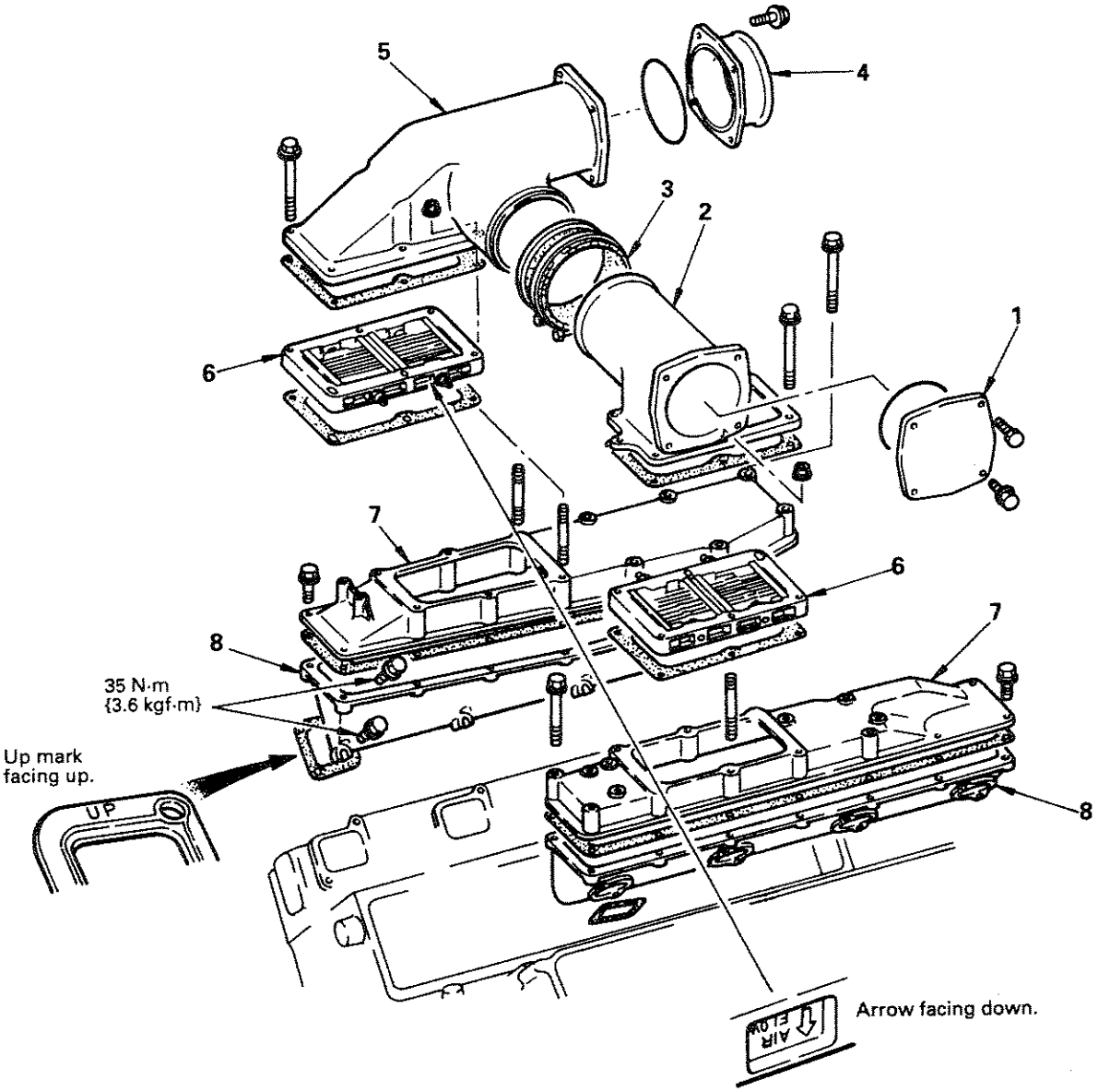

1 Inlet cover
2 Upper manifold LH
3 Rubber hose
4 Inlet coupler
5 Upper manifold RH
6 Air heater
7 Inlet manifold cover
8 Inlet manifold

NOTE:
1. **Remove harnesses before disassembly.**
2. **Ensure that the arrow points in the correct direction when installing the air heater and inlet manifold gasket.**
3. **For details of air heater inspections, refer to Group 16.**

B4559A

<8DC9-T>

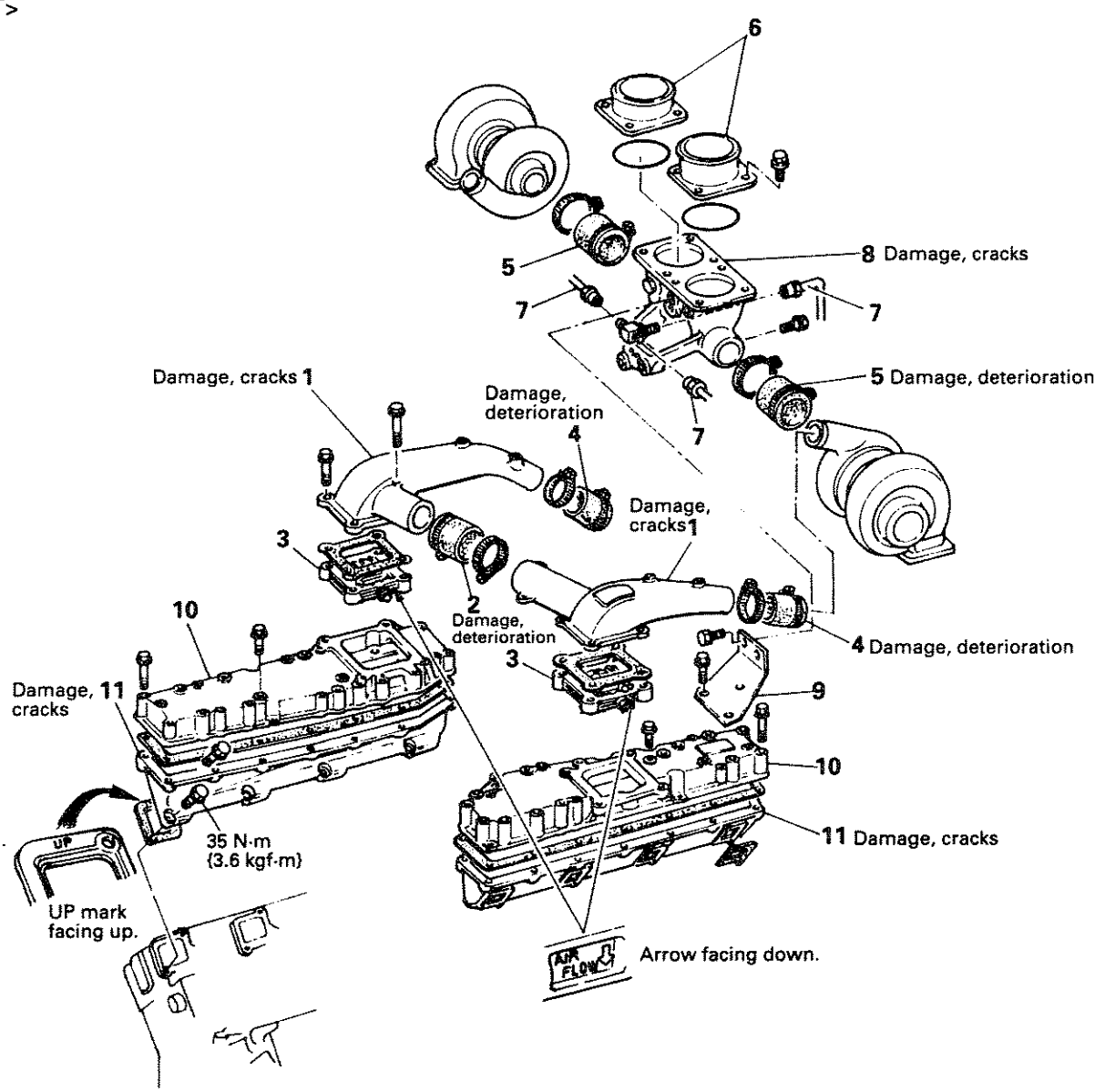

1 Upper manifold
2 Rubber hose
3 Air heater
4 Rubber hose
5 Rubber hose
6 Inlet coupler
7 Oil pipe
8 Inlet coupler
9 Coupler bracket
10 Inlet manifold cover
11 Inlet manifold

NOTE:
1. **Remove harnesses before disassembly.**
2. **Ensure that the arrow points in the correct direction when installing the air heater and inlet manifold gasket.**
3. **For details of air heater inspections, refer to Group 16.**

B4884D

<8DC9-TC>

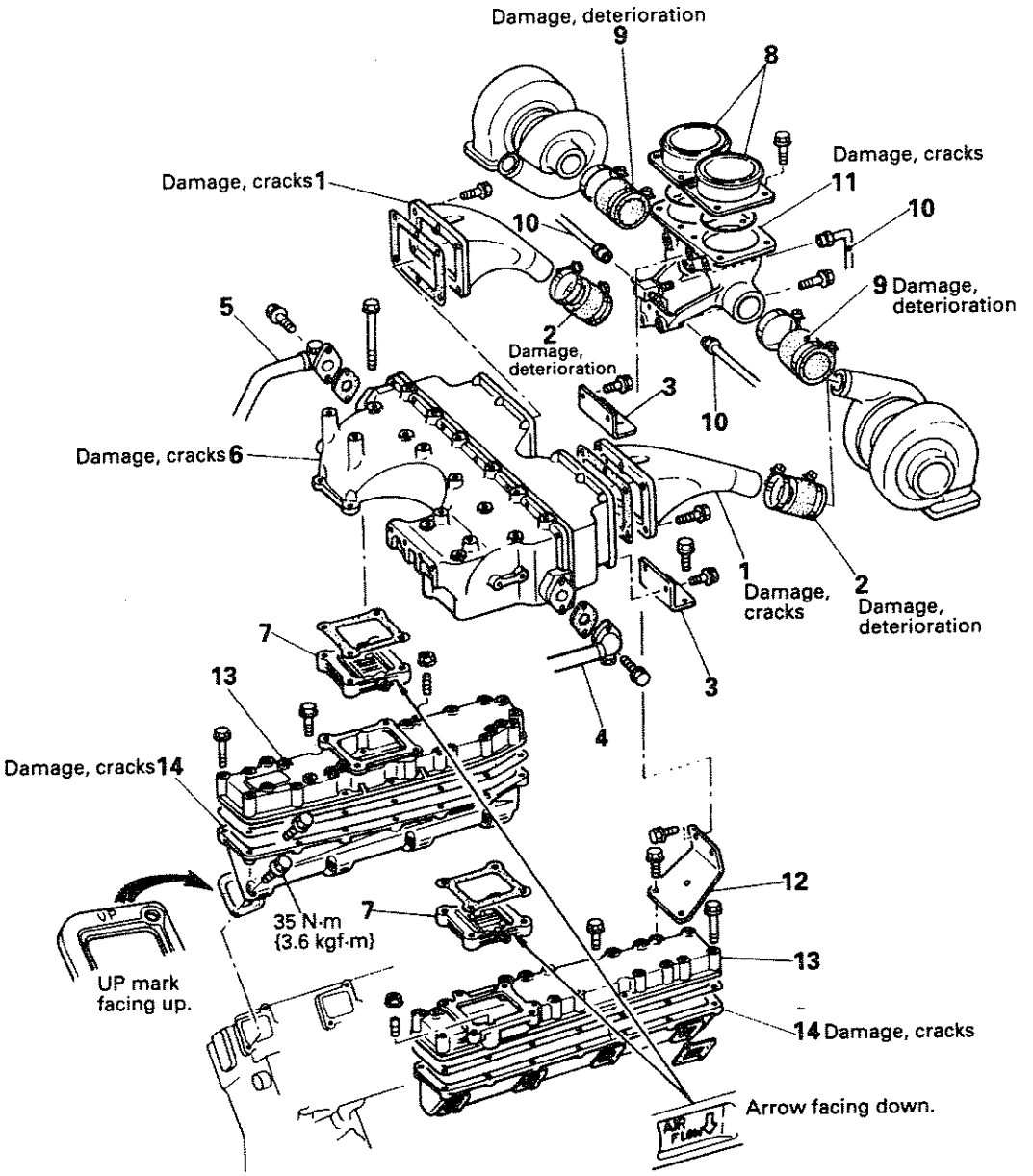

1 Air pipe	6 Aftercooler assembly	11 Inlet coupler
2 Rubber hose	7 Air heater	12 Coupler bracket
3 Bracket	8 Air inlet coupler	13 Inlet manifold cover
4 Water inlet pipe	9 Rubber hose	14 Inlet manifold
5 Water outlet pipe	10 Oil pipe	

NOTE:
1. **Remove harnesses before disassembly.**
2. **Ensure that the arrow points in the correct direction when installing the air heater and inlet manifold gasket.**
3. **For details of air heater inspections, refer to Group 16.**

B4885B

<8DC9-TL>

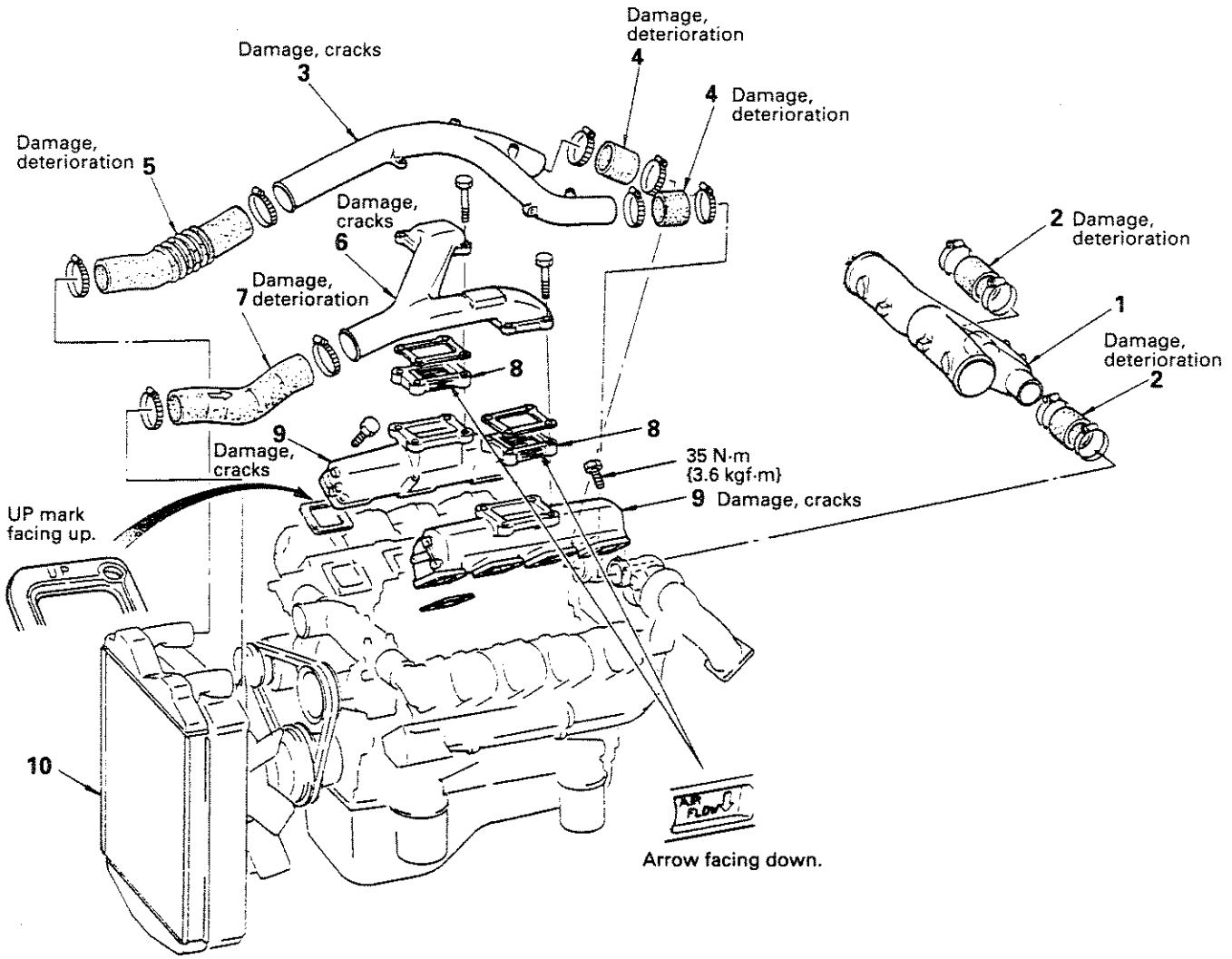

1	Manifold assembly	6	Upper manifold LH
2	Rubber hose	7	Air outlet hose
3	Upper manifold RH	8	Air heater
4	Rubber hose	9	Inlet manifold
5	Air inlet hose	10	Intercooler

NOTE:
1. **Remove harnesses before disassembly.**
2. **Ensure that the arrow points in the correct direction when installing the air heater and inlet manifold gasket.**
3. **For details of air heater inspections, refer to Group 16.**

B5674G

5.2 Removal and Installation of Exhaust System

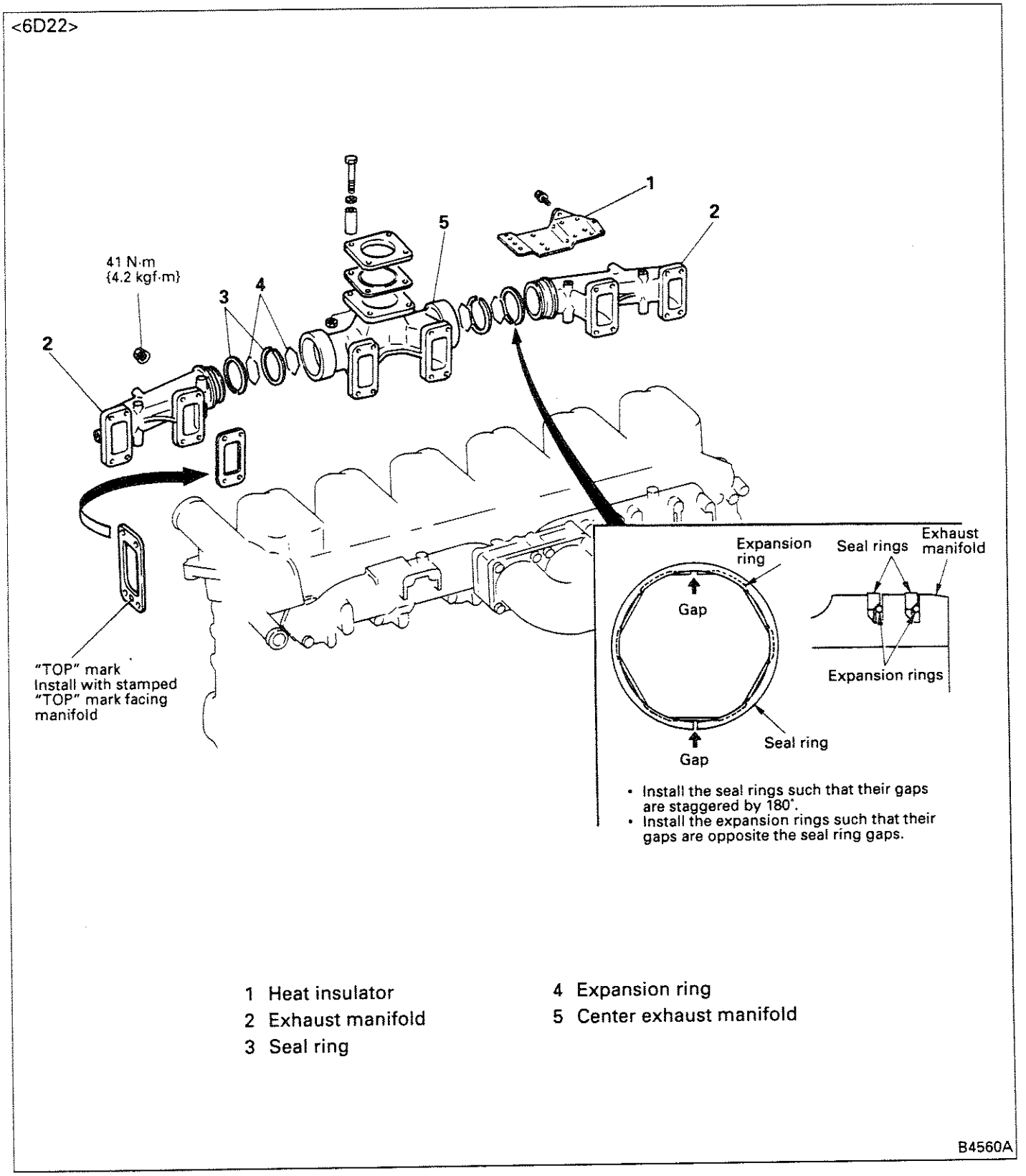

1 Heat insulator
2 Exhaust manifold
3 Seal ring
4 Expansion ring
5 Center exhaust manifold

Socket, MH061242 (special tool) is available to facilitate fitting of the exhaust manifold mounting nuts. Use of this tool is recommended.

<6D22-T, 22-TC, 24-T, 24-TC>

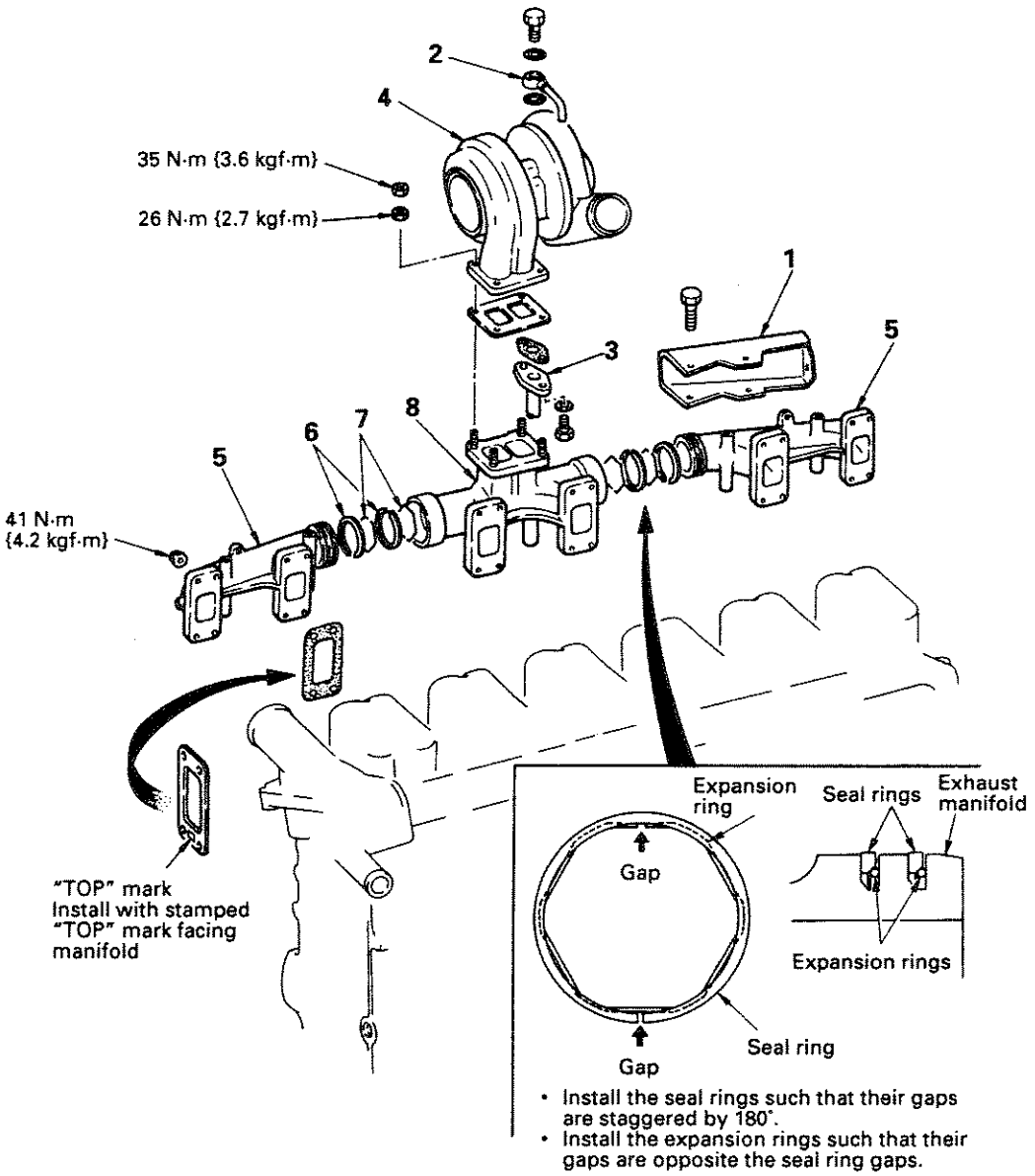

1 Heat insulator
2 Oil pipe
3 Oil return pipe
4 Turbocharger
5 Exhaust manifold
6 Seal ring
7 Expansion ring
8 Center exhaust manifold

B4561A

Socket, MH061242 (special tool) is available to facilitate fitting of the exhaust manifold mounting nuts. Use of this tool is recommended.

NOTE:
Some types of turbocharger fit onto the top of the exhaust manifold, while other types fit onto the bottom of the exhaust manifold. Maintenance procedures for both types are the same.

<8DC9>

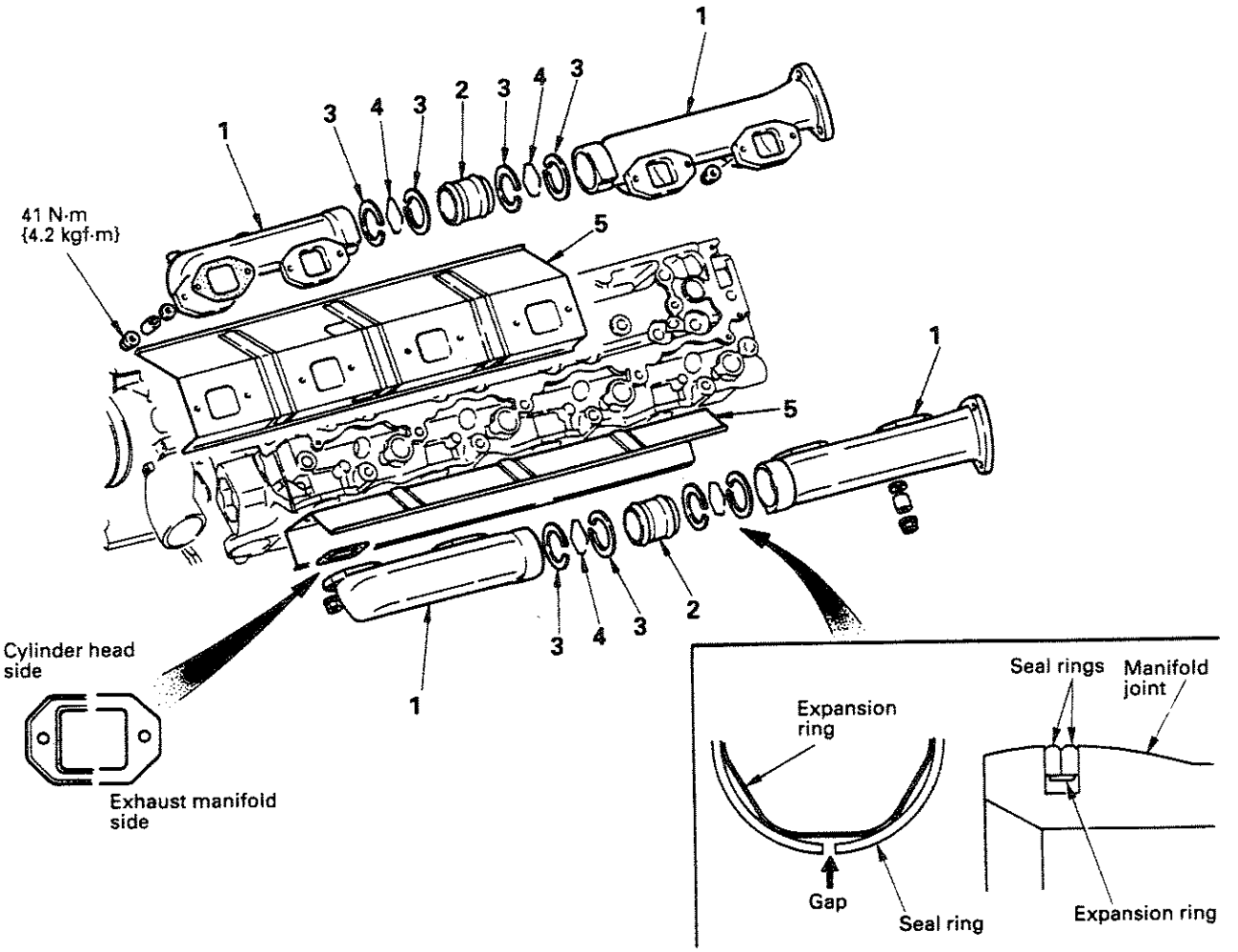

- Install the seal rings such that their gaps are staggered by 180°.
- Install the expansion rings such that their angles are away from the seal ring gaps.

1 Exhaust manifold
2 Manifold joint
3 Seal ring
4 Expansion ring
5 Exhaust manifold cover

B4562A

<8DC9-T, 9-TC>

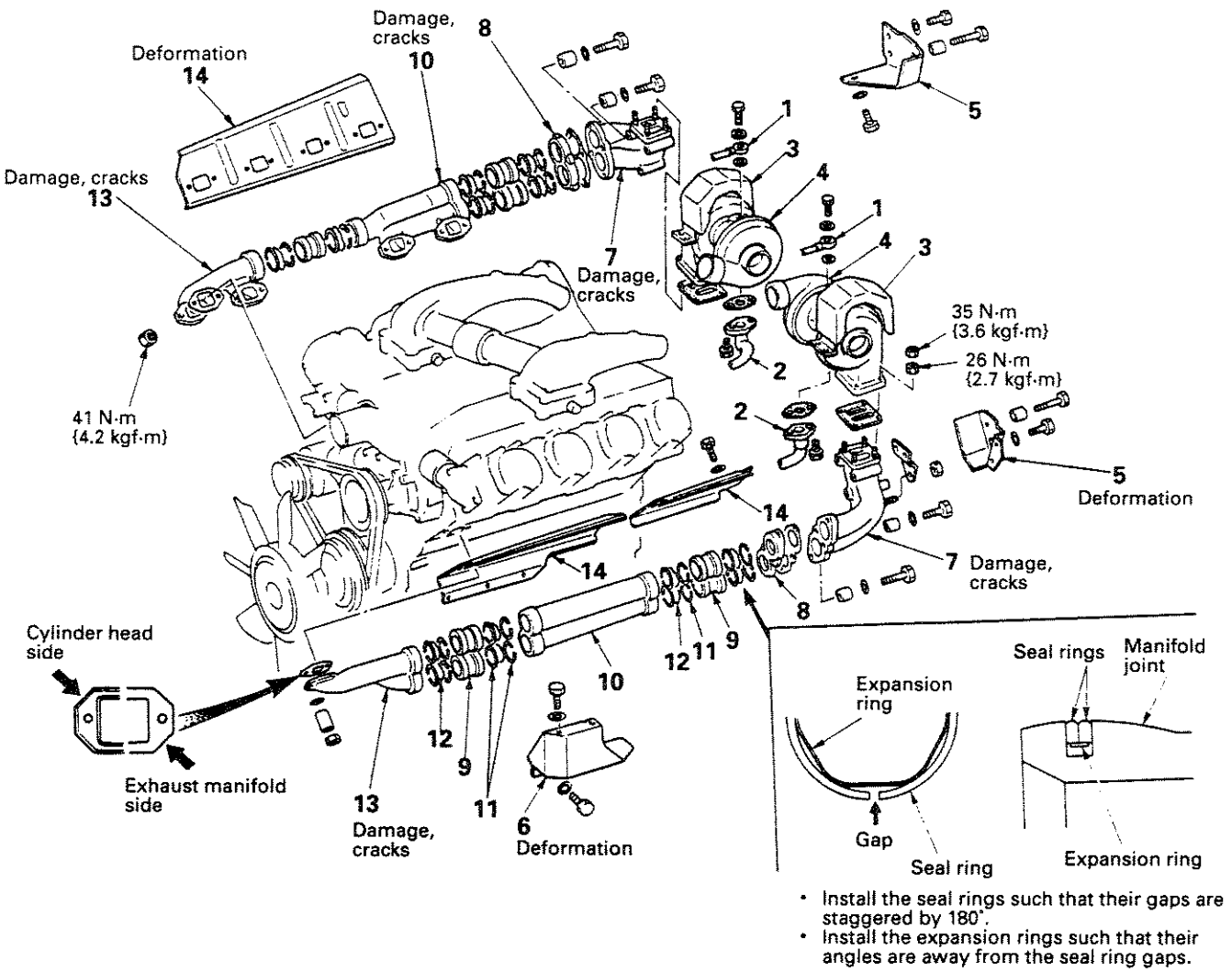

1 Oil pipe
2 Oil return pipe
3 Turbocharger cover
4 Turbocharger
5 Insulator
6 Exhaust manifold cover
7 Exhaust manifold, rear
8 Exhaust manifold adapter
9 Manifold joint
10 Center exhaust manifold
11 Seal ring
12 Expansion ring
13 Exhaust manifold, front
14 Exhaust manifold cover

B4131F

<8DC9-TL>

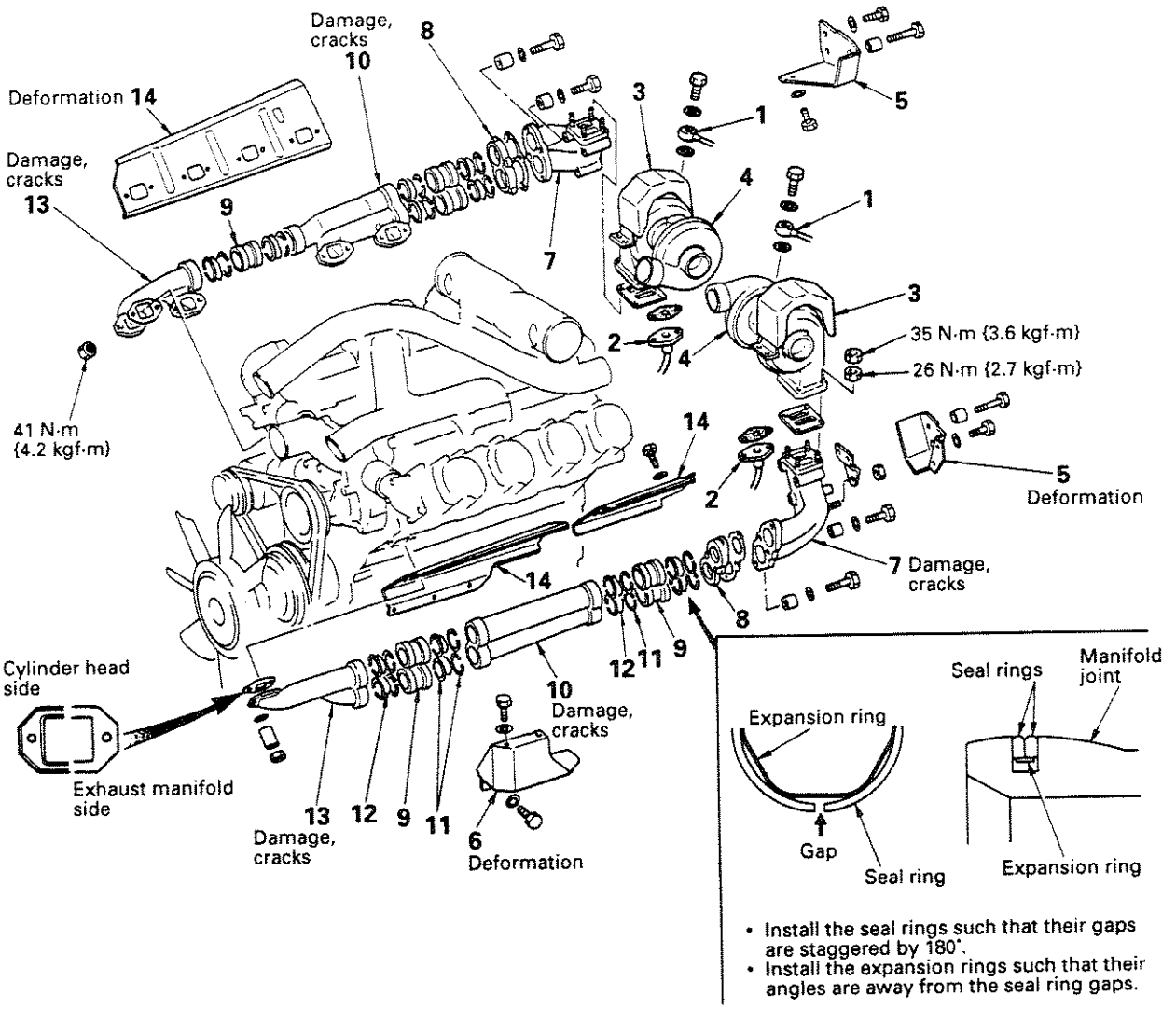

1 Oil pipe
2 Oil return pipe
3 Turbocharger cover
4 Turbocharger
5 Insulator
6 Exhaust manifold cover
7 Exhaust manifold, rear
8 Exhaust manifold adapter
9 Manifold joint
10 Center exhaust manifold
11 Seal ring
12 Expansion ring
13 Exhaust manifold, front
14 Exhaust manifold cover

B4131D

5.3 Air Cleaner

5.3.1 Disassembly and reassembly

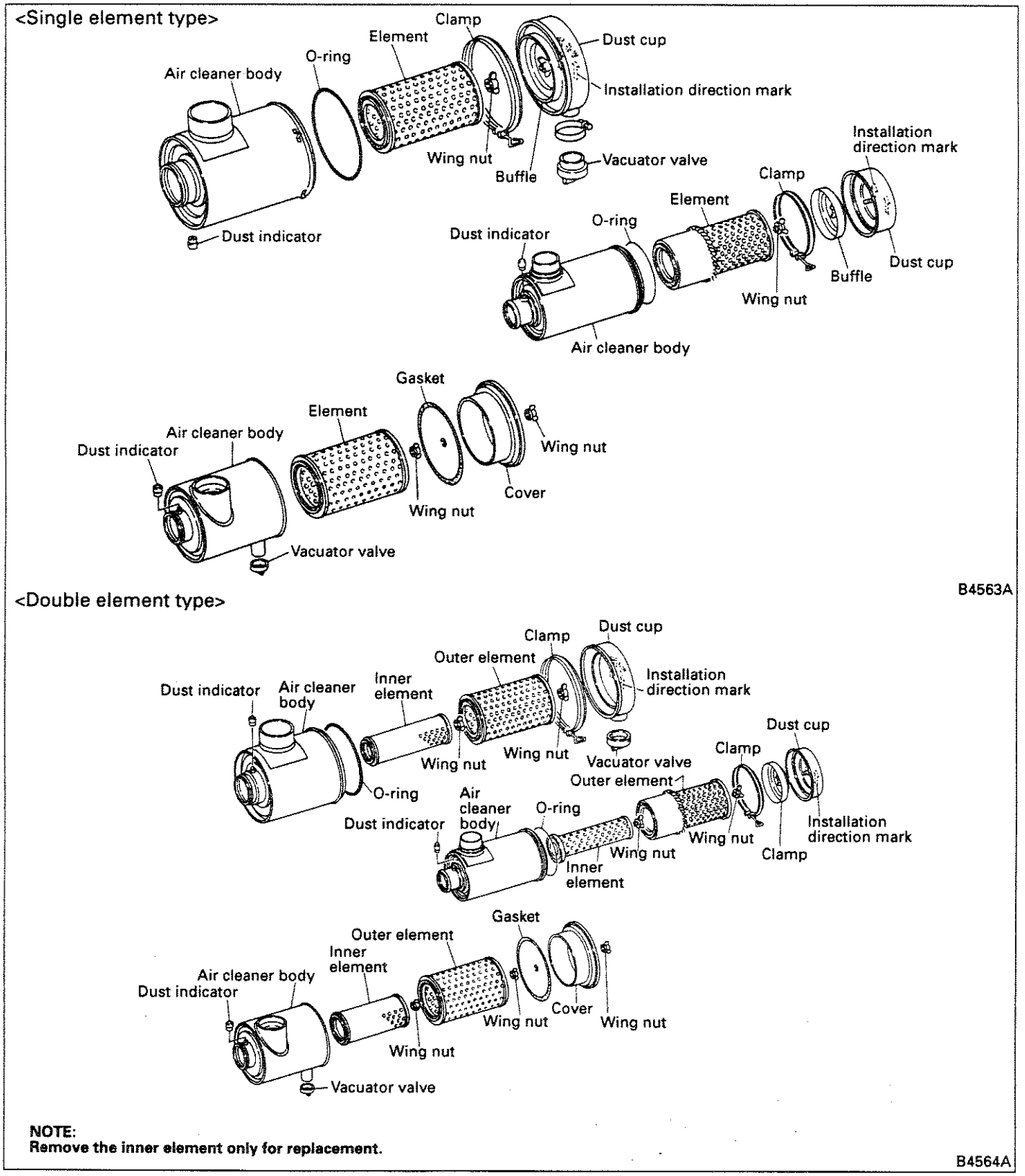

NOTE:
Remove the inner element only for replacement.

5.3.2 Inspection and cleaning

(1) When there is dry dust on the element

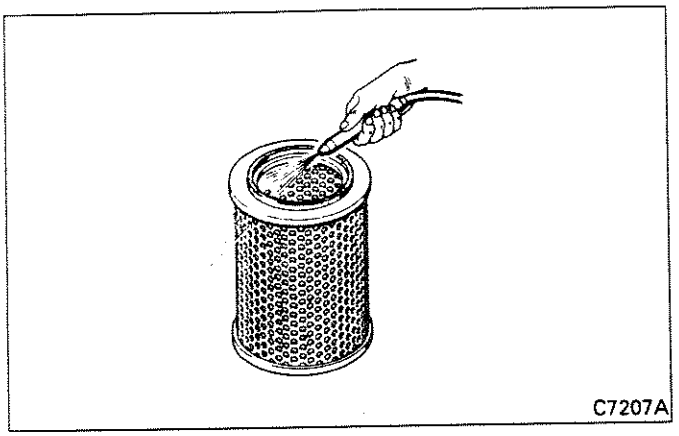

If there is dry dust on the element, clean the dust by blowing 685 kPa {7 kgf/cm^2} or lower compressed air against the element.
Blow the compressed air from inside the element up and down along the frills of the filter paper and clean the whole element evenly.

NOTE:

1. **Do not strike the element or strike it against a hard object to loosen the dust.**
2. **Do not clean, but replace, the inner element.**

(2) When there is moist dust on the element

If the element is contaminated with moist soot, replace it regardless of the specified replacement frequency.

(3) Inspection of element

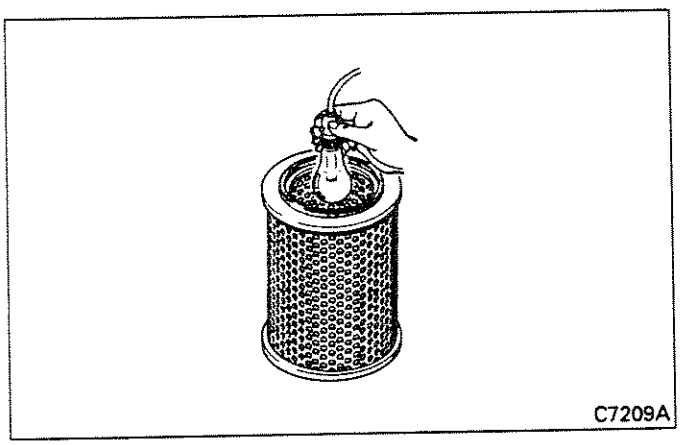

After the element has been cleaned, put an electric lamp inside the element to check for damage and pin holes. If there are thin portions in the filter paper, replace the element. If the packing on the top surface of the element is broken, replace the element.

(4) Clean the inside of the air cleaner body and dust cup, and discharge the deposited dust.

(5) Dust indicator

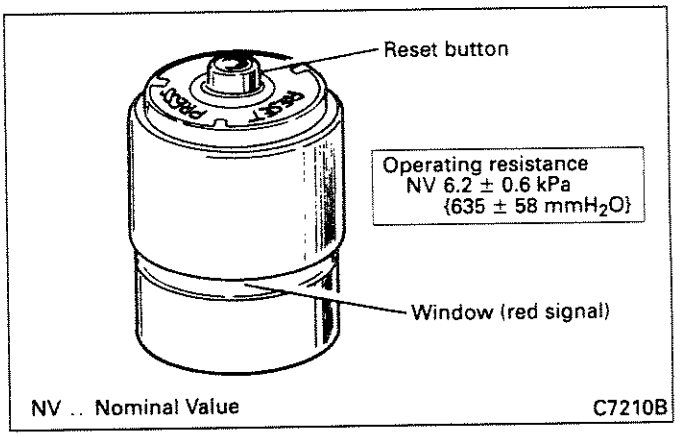

Start the engine and close the inlet port of air cleaner gradually to increase negative pressure. If the red signal is displayed at the dust indicator, or warning lamp lights for the electric type dust indicator, the dust indicator is normal.

NOTE:

Perform this inspection after cleaning or replacement of the air cleaner element if the element is heavily clogged.

5.4 Turbocharger

5.4.1 TD08, TD08H type turbocharger

(1) Disassembly

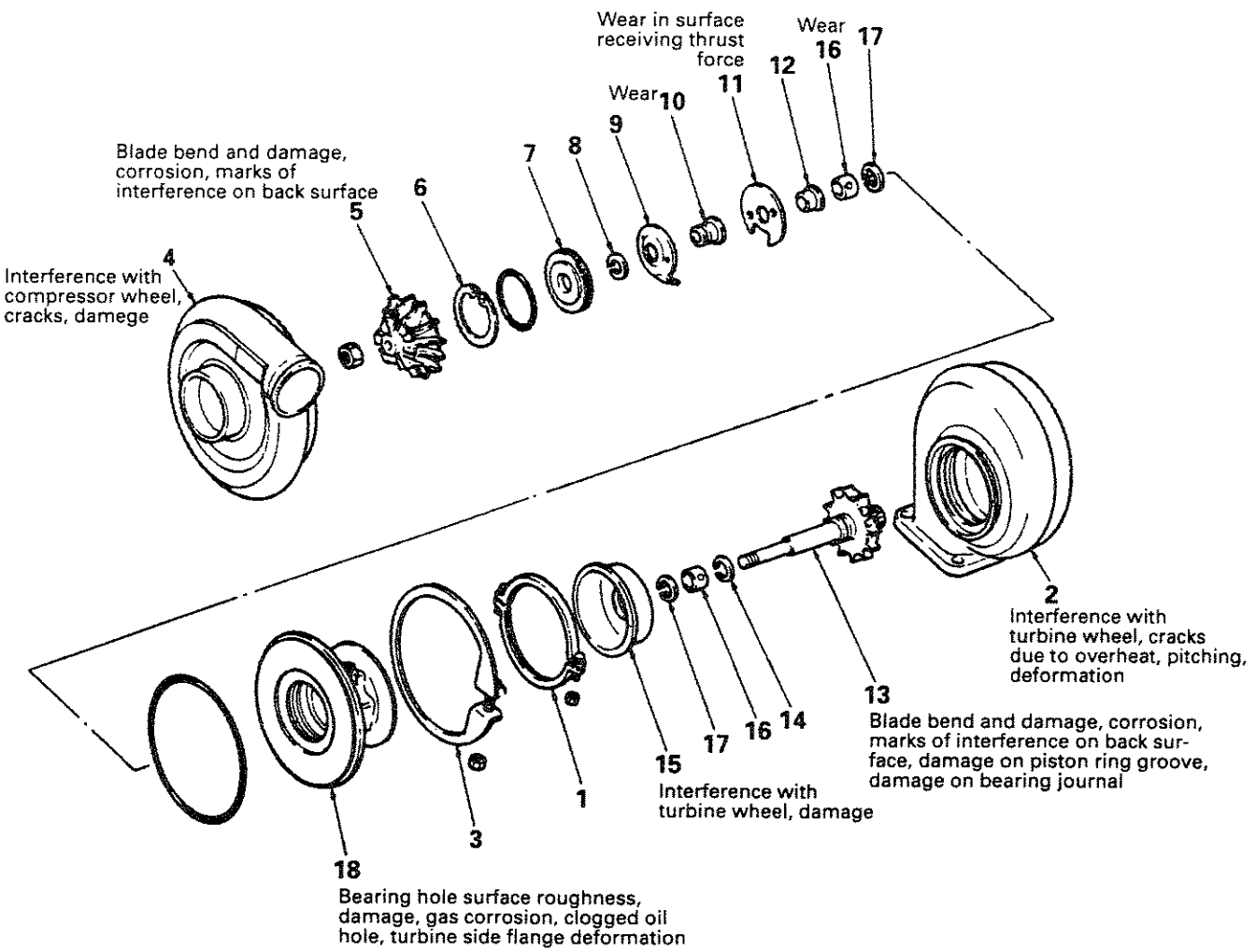

Disassembly sequence

1 Coupling assembly
② Turbine housing
3 Snap ring
④ Compressor cover
⑤ Compressor wheel
6 Snap ring
⑦ Insert
8 Piston ring
9 Oil deflector
10 Thrust sleeve
11 Thrust bearing
12 Thrust ring
13 Shaft-and-turbine-wheel
14 Piston ring
15 Turbine back plate
16 Bearing
17 Snap ring
18 Bearing housing

For parts with an encircled number, refer to Disassembly Procedure that follows.

C8965B

Disassembly Procedure

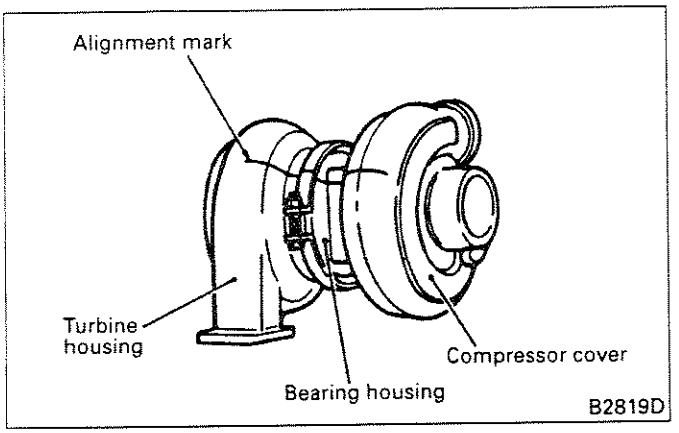

(a) Before disassembling the turbocharger, make alignment marks on the compressor cover, bearing housing, and turbine housing so that they can be properly reassembled.

(b) Removal of turbine housing

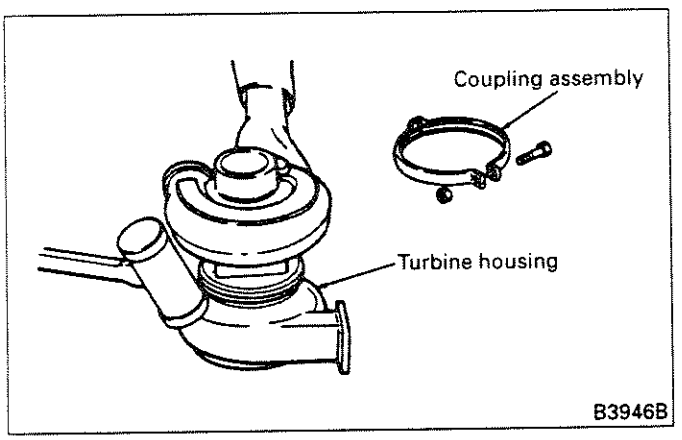

To remove the turbine housing, remove the coupling assembly and tap the housing with a plastic hammer or similar tool to prevent damage to it.

NOTE:
The turbine wheel blades are easy to bend. Use care not to damage them.

(c) Removal of compressor cover

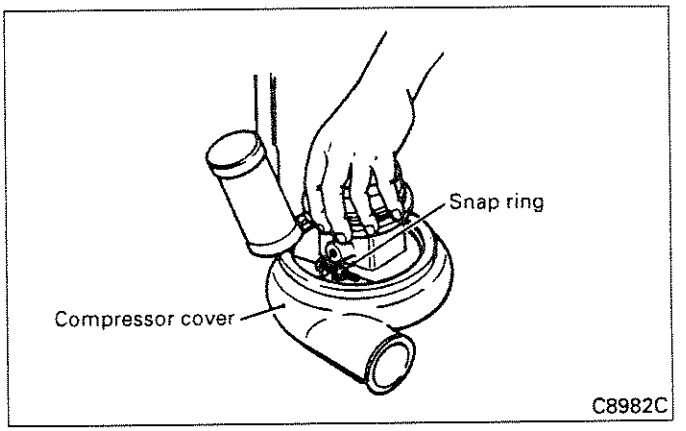

Remove the compressor cover by tapping it with a plastic hammer or similar tool which will not damage the cover, with the snap ring loosened.

NOTE:
Use care not to damage the compressor wheel during the removal procedure.

(d) Removal of compressor wheel

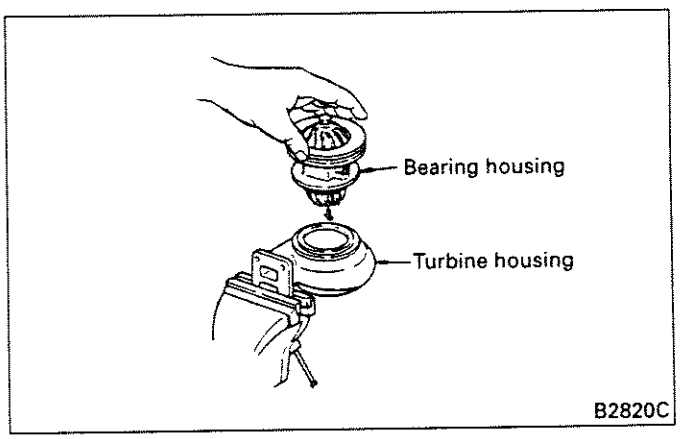

1) Clamp the turbine housing in a vise and fit the bearing housing into the turbine housing with the turbine wheel side of the bearing housing facing the turbine housing.

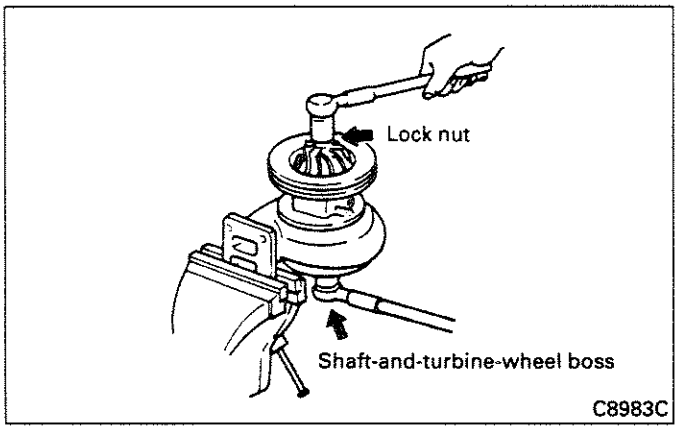

2) While holding the shaft-and-turbine-wheel boss, remove the lock nut that secures the compressor wheel.

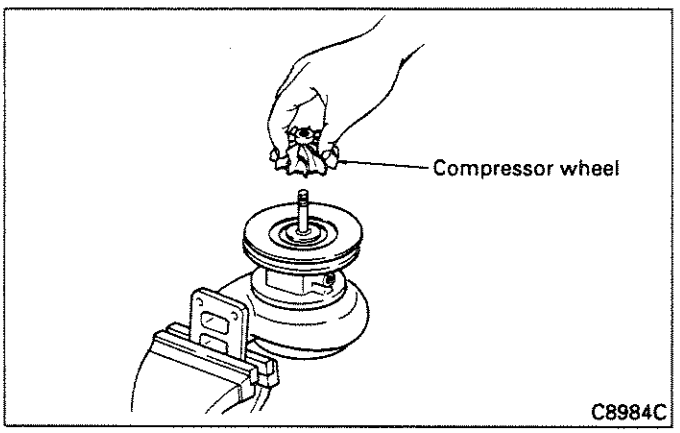

3) Slowly slide off the compressor wheel upward.

(e) Removal of insert

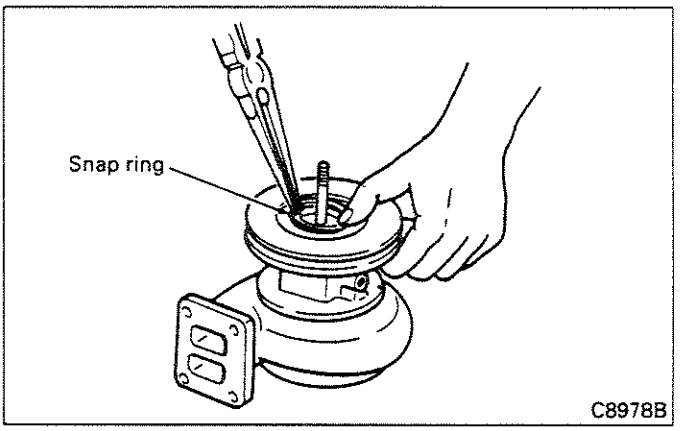

1) Snap off the snap ring that secures the insert onto the bearing housing.

NOTE:
Retain the snap ring by hand to prevent it from springing out when slipping off the snap ring pliers.

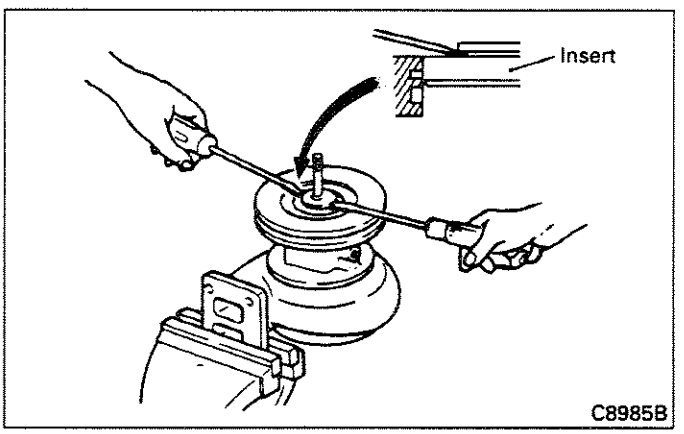

2) Fit the tip of a screwdriver into the portion of the insert shown and carefully remove it from the bearing housing.

(2) Cleaning and inspection

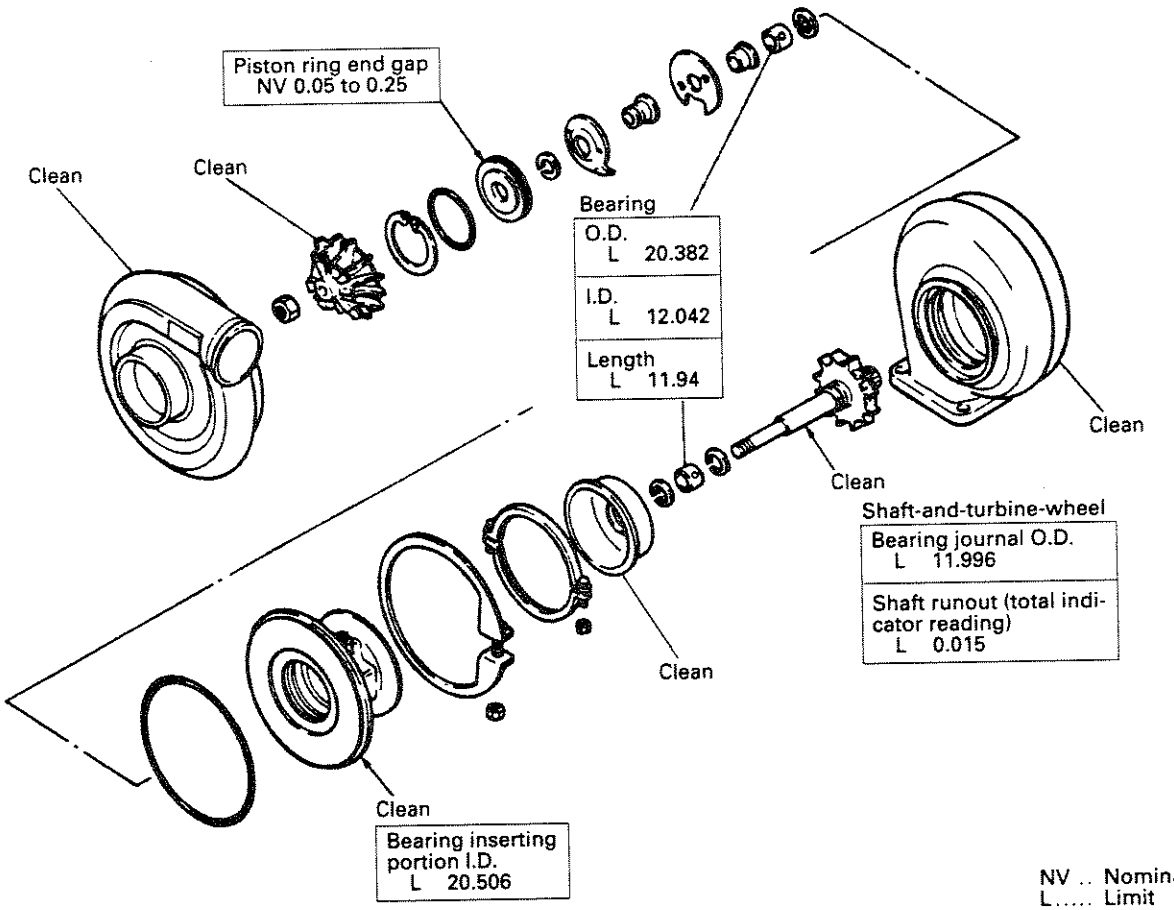

NOTE:
Before cleaning, visually inspect each component to find any scorching or rubbing that will not be apparent after cleaning. For details, refer to item (1) of section 5.4.1.

C8988B

(a) Cleaning

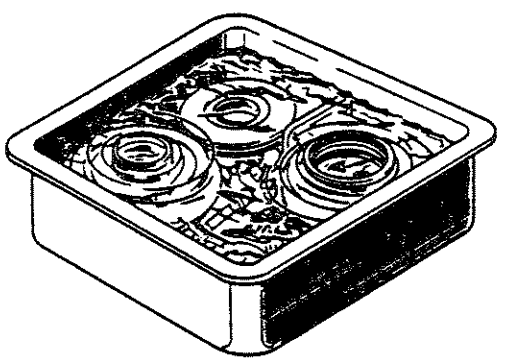

13628

1) Immerse all parts in a non-flammable solvent (Daido Kagaku Kogyo's Dai Cleaner T-30 or equivalent) to clean oily contamination.

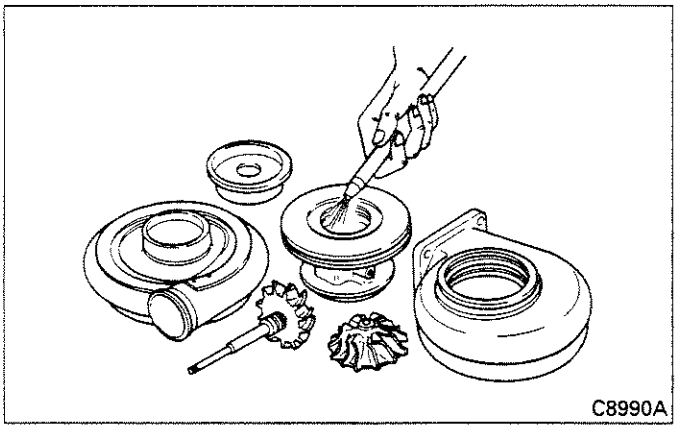

2) Blow clean compressed air against the entire internal and external surfaces.

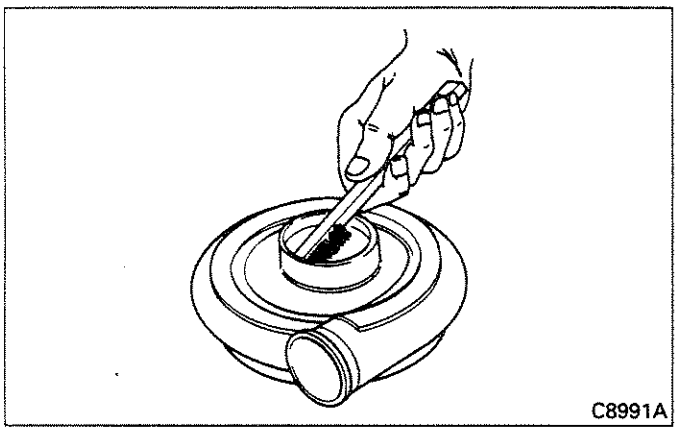

3) Clean deposits, using a plastic scraper or bristle brush.
   After deposits have been removed, soak parts in a non-flammable solvent again; then, blow compressed air against them.

NOTE:
Use care to prevent damage to parts.

(b) Inspection of bearing housing

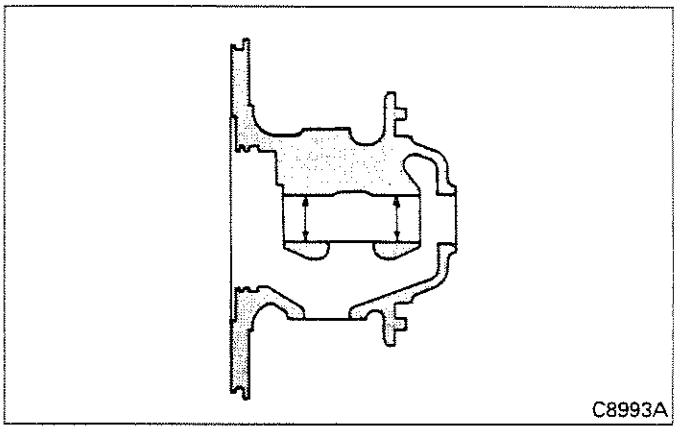

Measure I.D. of the area receiving the bearing. Replace the bearing housing if the measurement exceeds the limit.

(c) Inspection of bearing

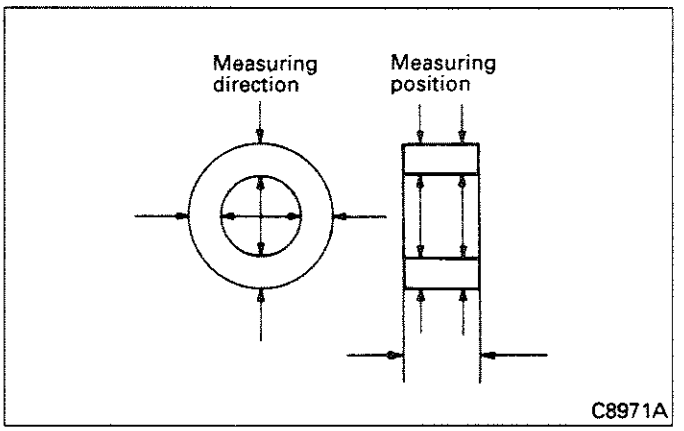

Measure I.D., O.D., and length of the bearing. If the measured values exceed the limit, replace.

(d) Inspection of shaft

1) Journal O.D.

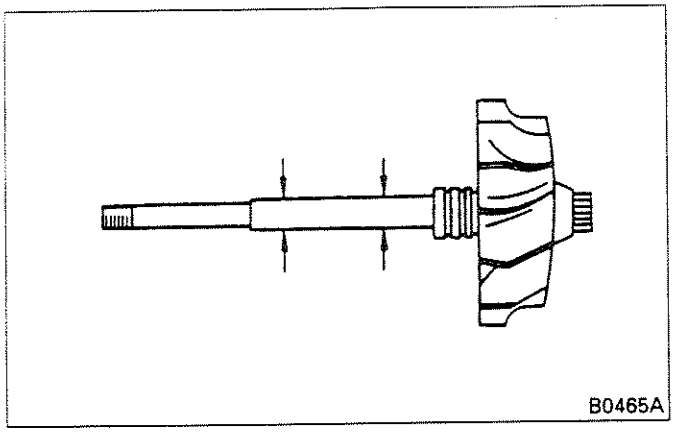

Measure the shaft-and-turbine-wheel journal diameter.
If the measured value is less than the limit, replace the shaft-and-turbine-wheel.

2) Shaft runout

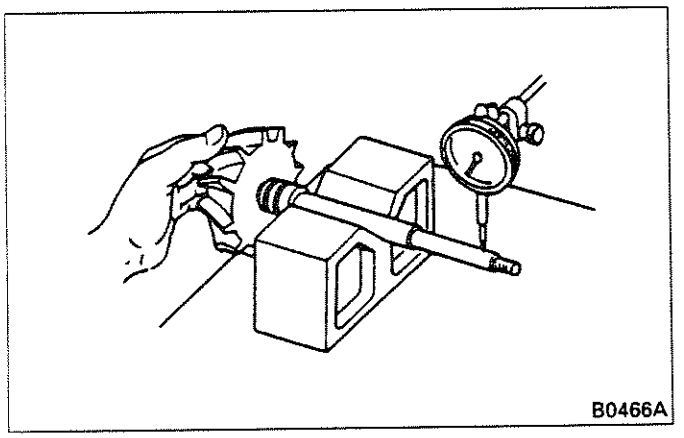

Set a dial indicator to the shaft as shown and turn the turbine wheel slowly to measure shaft runout.
If the measurement exceeds the limit, replace the shaft-and-turbine-wheel.
If the shaft journal is rough, clamp both centers on a lathe and lightly grind the journal surface with a sand paper #400 and engine oil with a spindle speed at 300 to 600 rpm.

NOTE:
After polishing the journal, measure its outside diameter (the part that rotates in the bearing). If the outside diameter is beyond the service limit, replace the shaft and turbine wheel.

(e) Inspection of insert

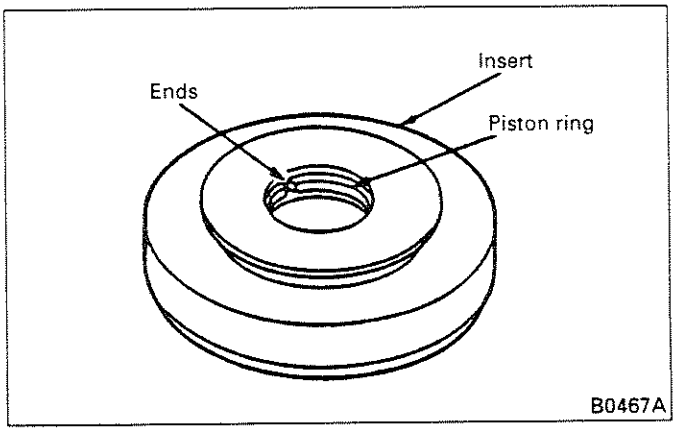

Fit a new piston ring in the insert bore and measure the end gap of the piston ring using a feeler gauge.
If the end gap is out of the nominal value, replace the insert.

(3) Reassembly

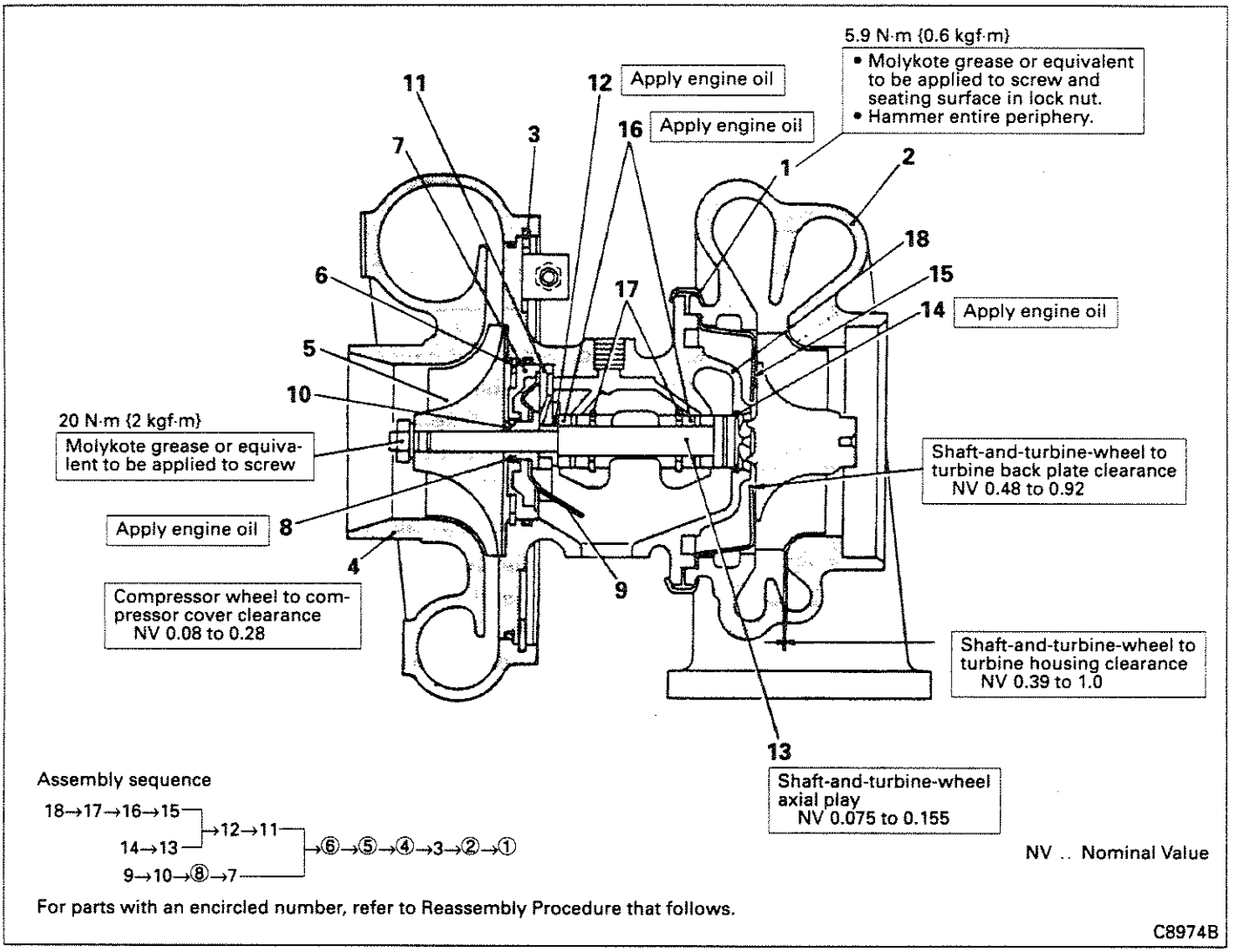

Reassembly Procedure

(a) Installation of piston ring

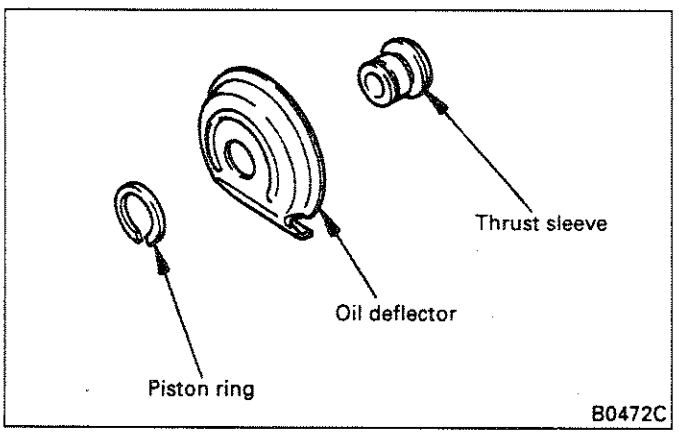

Set the thrust sleeve into the oil deflector, and install the piston ring.

NOTE:

When mounting piston ring to the thrust sleeve, ensure that the ring is not expanded and ring ends are not twisted.

(b) Installation of snap ring

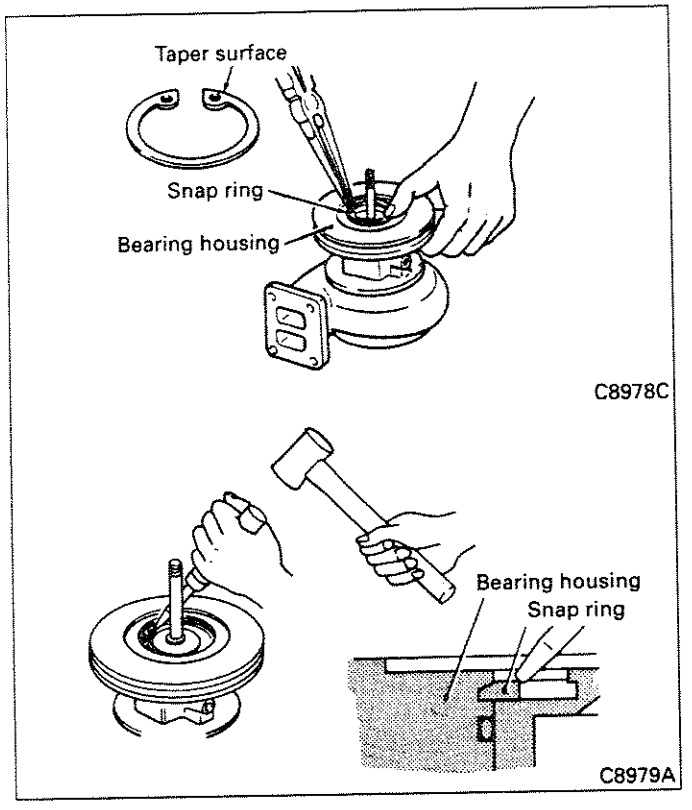

Install the snap ring to the bearing housing with its taper up.
After installation, using a screwdriver, drive the snap ring into the groove in the bearing housing by hummering.

NOTE:

1. **Retain the snap ring by hand to prevent it from springing out when slipping off the snap ring pliers.**
2. **Special care must be exercised, when tapping the snap ring into position, to prevent damage to the bearing housing by the screwdriver.**

(c) Measurement of clearance between shaft-and-turbine-wheel and turbine housing

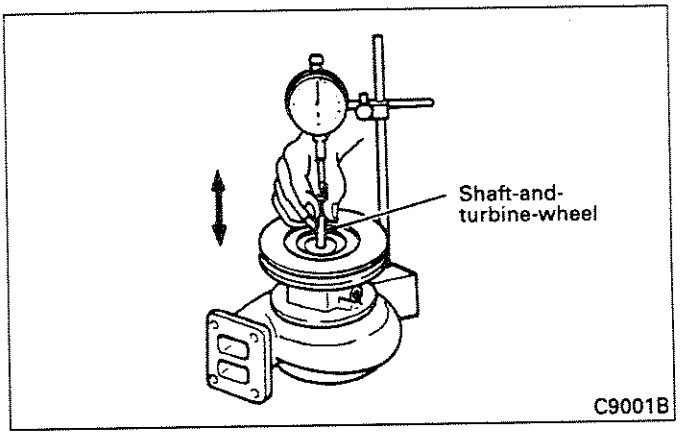

Set a dial indicator to the end of the shaft and move the shaft in the axial direction to measure the clearance. If the measurement is out of specification, disassemble and isolate the cause.

(d) Installation of compressor wheel

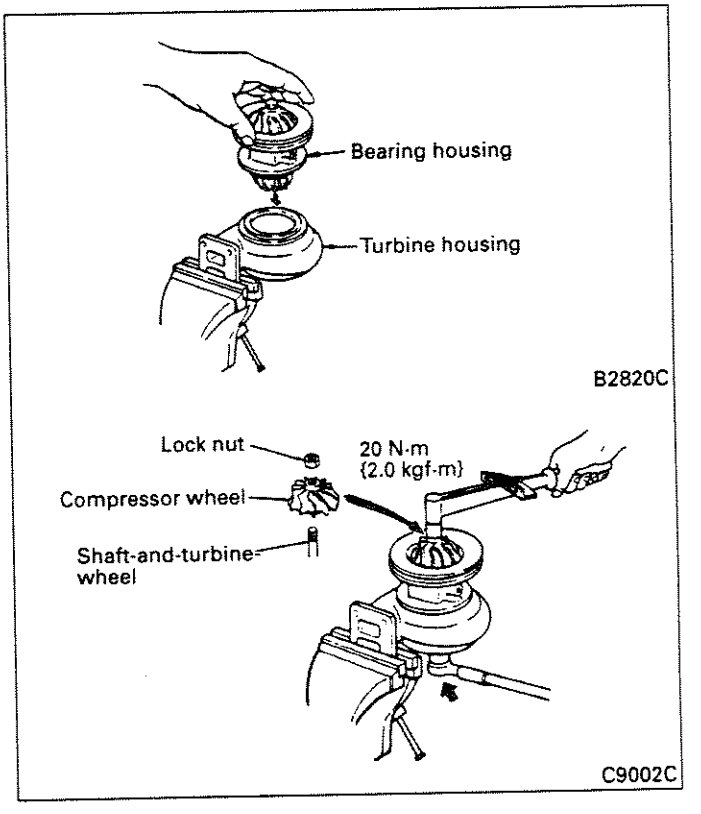

1) Holding the turbine housing in a vice, set the turbine wheel side of the bearing housing into the turbine housing.

2) Coat threads in the shaft-and-turbine-wheel with molybdenum disulfide base grease Li soap and mount the compressor wheel onto the shaft.
3) Holding the boss on the turbine wheel side, tighten the compressor wheel lock nut to the specified torque.

NOTE:
Set the bearing housing carefully to prevent damage on the turbine wheel blades.

(e) Measurement of axial play in shaft-and-turbine-wheel

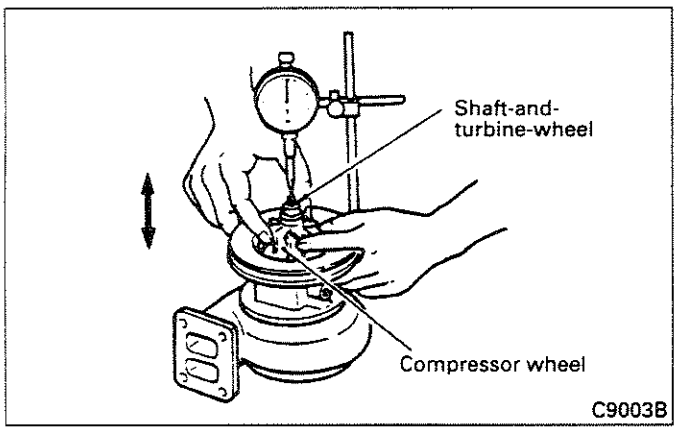

Set a dial gauge on the shaft-and-turbine-wheel end. With compressor wheel moved in the axial direction, measure the end play. If the play is out of specification, disassemble and check to locate the cause.

(f) Measurement of clearance between the turbine back plate and shaft-and-turbine-wheel back surface

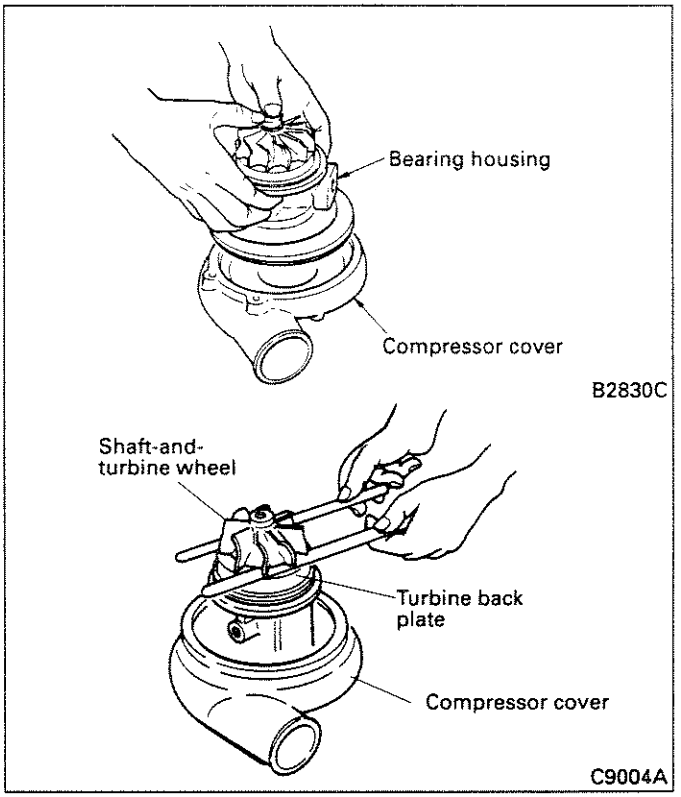

Temporarily mount the bearing housing to the compressor cover from the compressor wheel side. Measure the clearance between the turbine back plate and shaft-and-turbine-wheel back surface. If the clearance is out of specification, disassemble and isolate the cause.

NOTE:
Be sure to use two thickness gauges and take measurement at the tip of the blades.

(g) Compressor wheel to compressor cover clearance

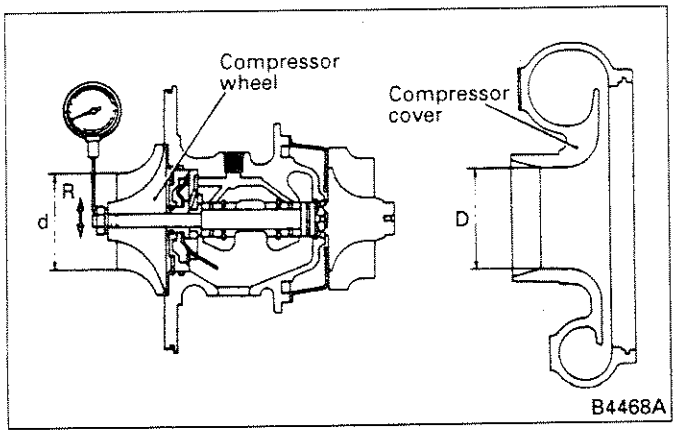

Check by the following procedures.

1) Move up and down the compressor wheel to measure runout (R).

NOTE:
Do not measure runout by turning the compressor wheel.

2) Measure compressor cover inside diameter (D) and compressor wheel outside diameter (d) at places indicated in the illustration.
3) Calculate the clearance by the equation given below.
   If it is out of specification, disassemble and check again.
   Clearance = 1/2 (D – d – R)

(h) Installation of turbine housing and compressor cover

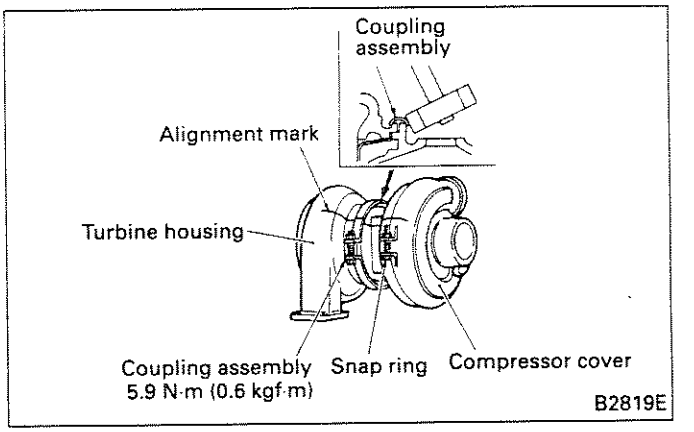

Make sure that the alignment marks are aligned and secure the parts with the coupling assembly and snap ring.
Install the coupling assembly by the following procedures.

1) Tighten the coupling assembly to specified torque.
2) Hammer the coupling assembly all around.
3) Tighten again the coupling assembly to specified torque.

(i) After reassembly, turn the turbine wheel and compressor wheel by hand and check for smooth rotation.
   If the wheels turn heavily, or bind, disassemble, and locate the cause of trouble.

5.4.2 4LF type turbocharger

For disassembly, inspection, cleaning, and reassembly procedures, refer to section 5.4.1 unless where they are described here.

(1) Disassembly

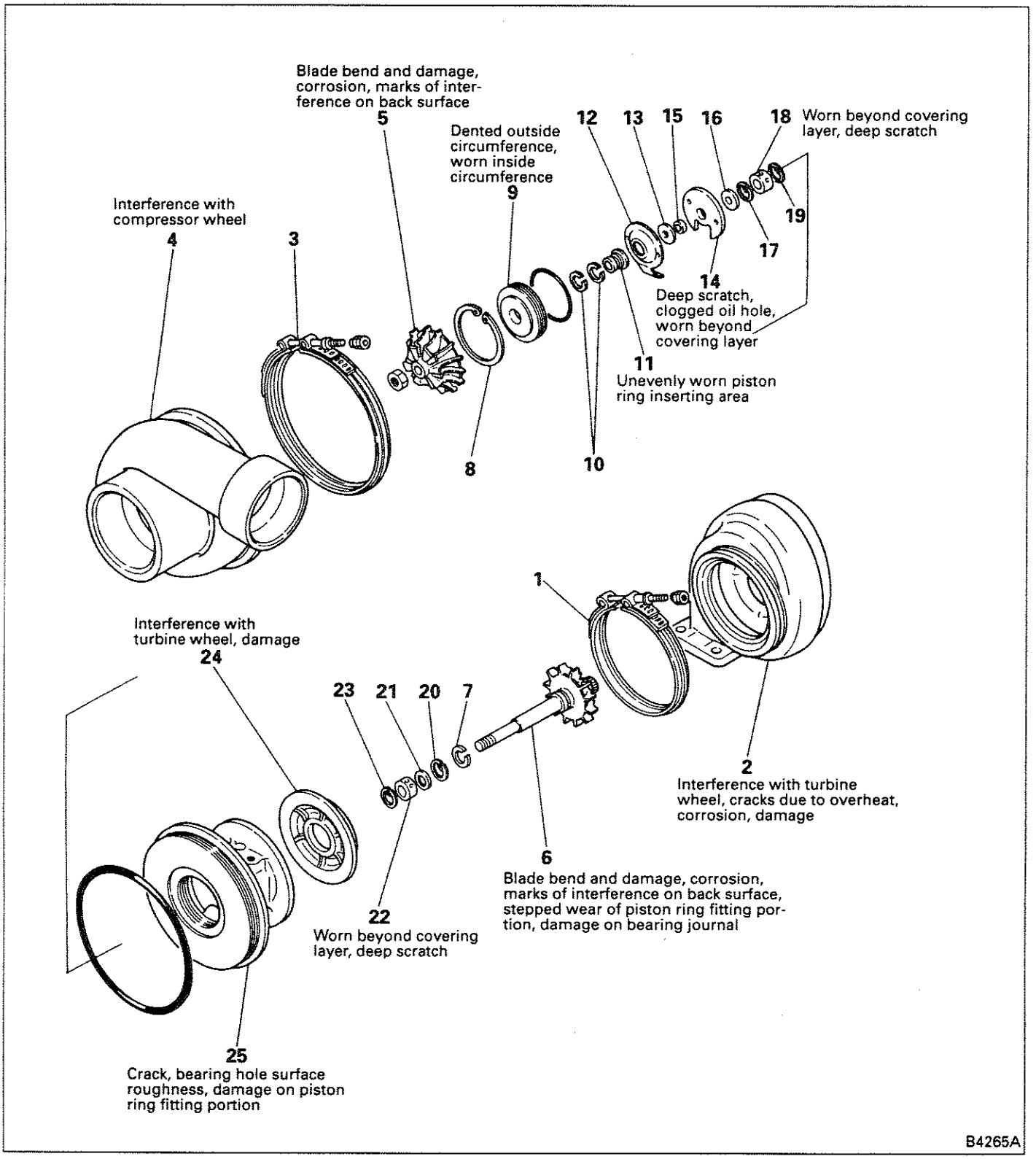

Disassembly sequence

1 V-clamp
2 Turbine housing
3 V-clamp
4 Compressor cover
5 Compressor wheel
6 Shaft-and-turbine-wheel
7 Piston ring
8 Snap ring
9 Insert
10 Piston ring
11 Flinger sleeve
12 Oil deflector
13 Thrust ring
14 Thrust bearing
15 Sleeve
16 Thrust ring
⑰ Snap ring
18 Bearing
⑲ Snap ring
⑳ Snap ring
21 Oil control sleeve
22 Bearing
㉓ Snap ring
24 Back plate
25 Bearing housing

For parts with an encircled number, refer to Disassembly Procedure that follows.

NOTE:
1. **Before disassembly, draw alignment marks on the compressor cover, bearing housing, and turbine housing to facilitate later reassembly.**
2. **The blades of the compressor wheel and turbine wheel bend easily. Be careful not to drop or crush these items.**
3. **Do not remove the bearing housing pins (2 places).**

Disassembly Procedure

Removing snap ring

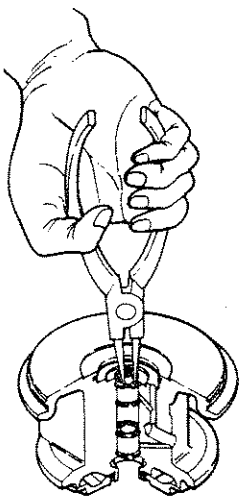

B4266A

When the snap ring holding the bearing in position is to be removed, use pliers (tip diameter 1 mm) to prevent damage to the inside of the bearing housing.

(2) Cleaning and inspection

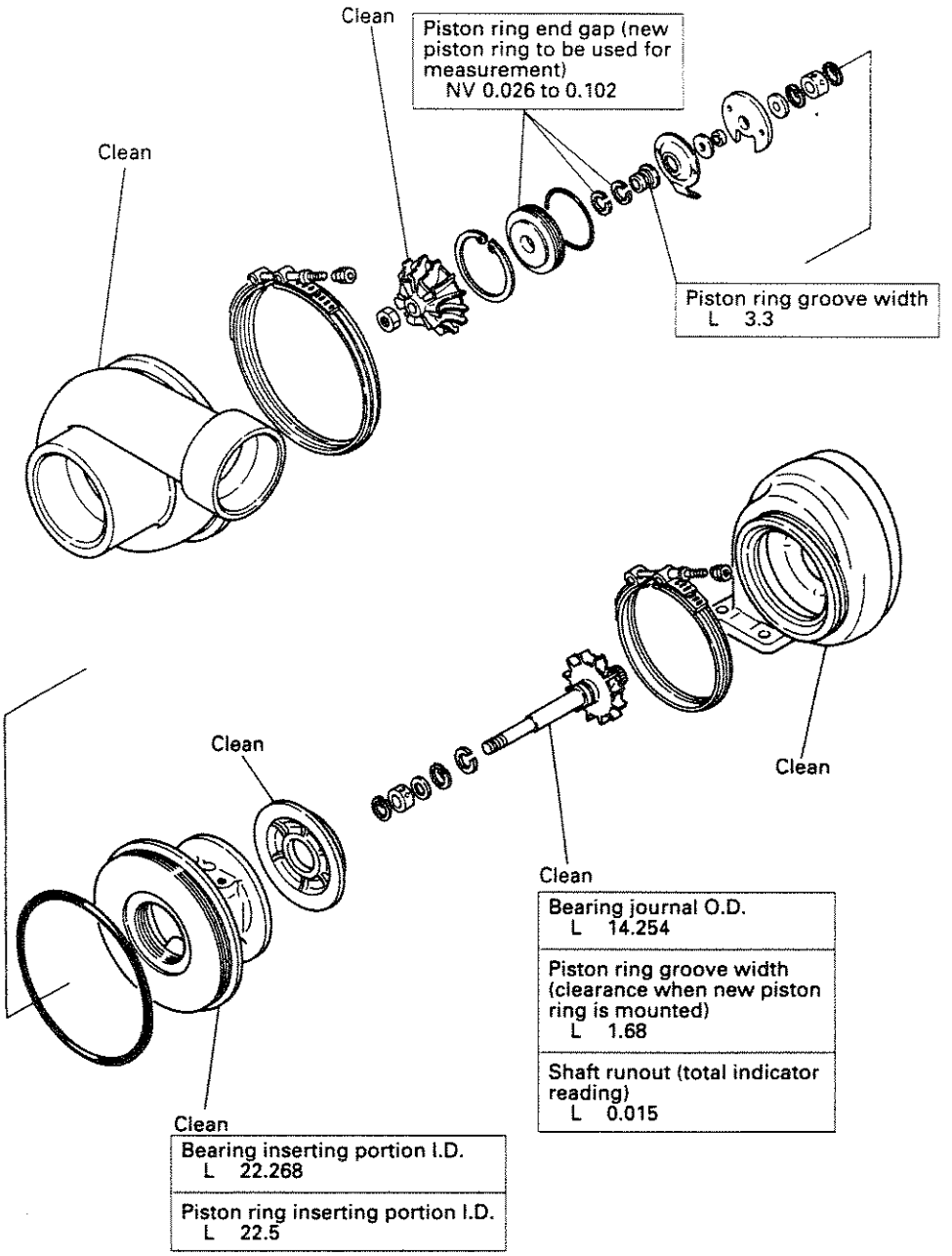

NV .. Nominal Value
L..... Limit

NOTE:
Before cleaning, visually inspect each component to find any scorching or rubbing that will not be apparent after cleaning. For details, refer to item (1) of section 5.4.2.

B4267A

(a) Measurement of piston ring groove width

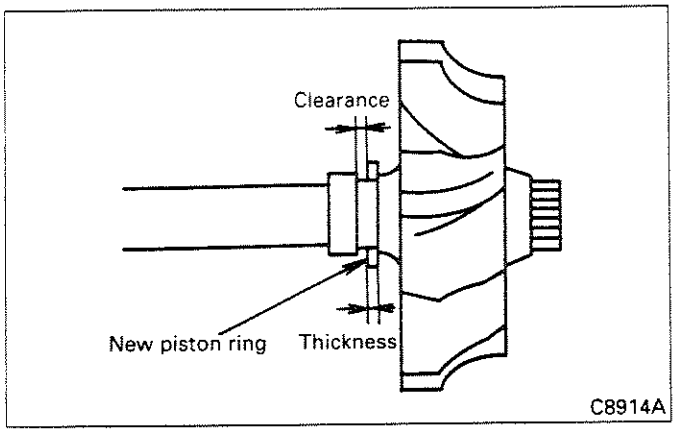

Install a new piston ring in the piston ring groove and measure the clearance.
If the reading is more than the limit, replace the shaft-and-turbine-wheel.

(b) Measurement of flinger sleeve groove width

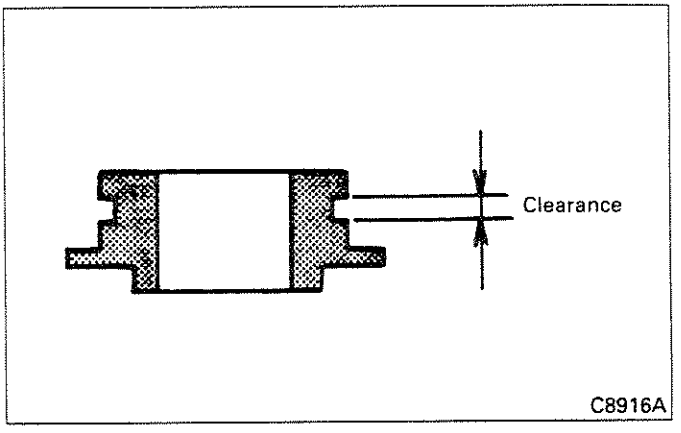

Measure the piston ring groove width of the flinger sleeve.
If the reading is more than the limit, replace the flinger sleeve.

(3) Reassembly

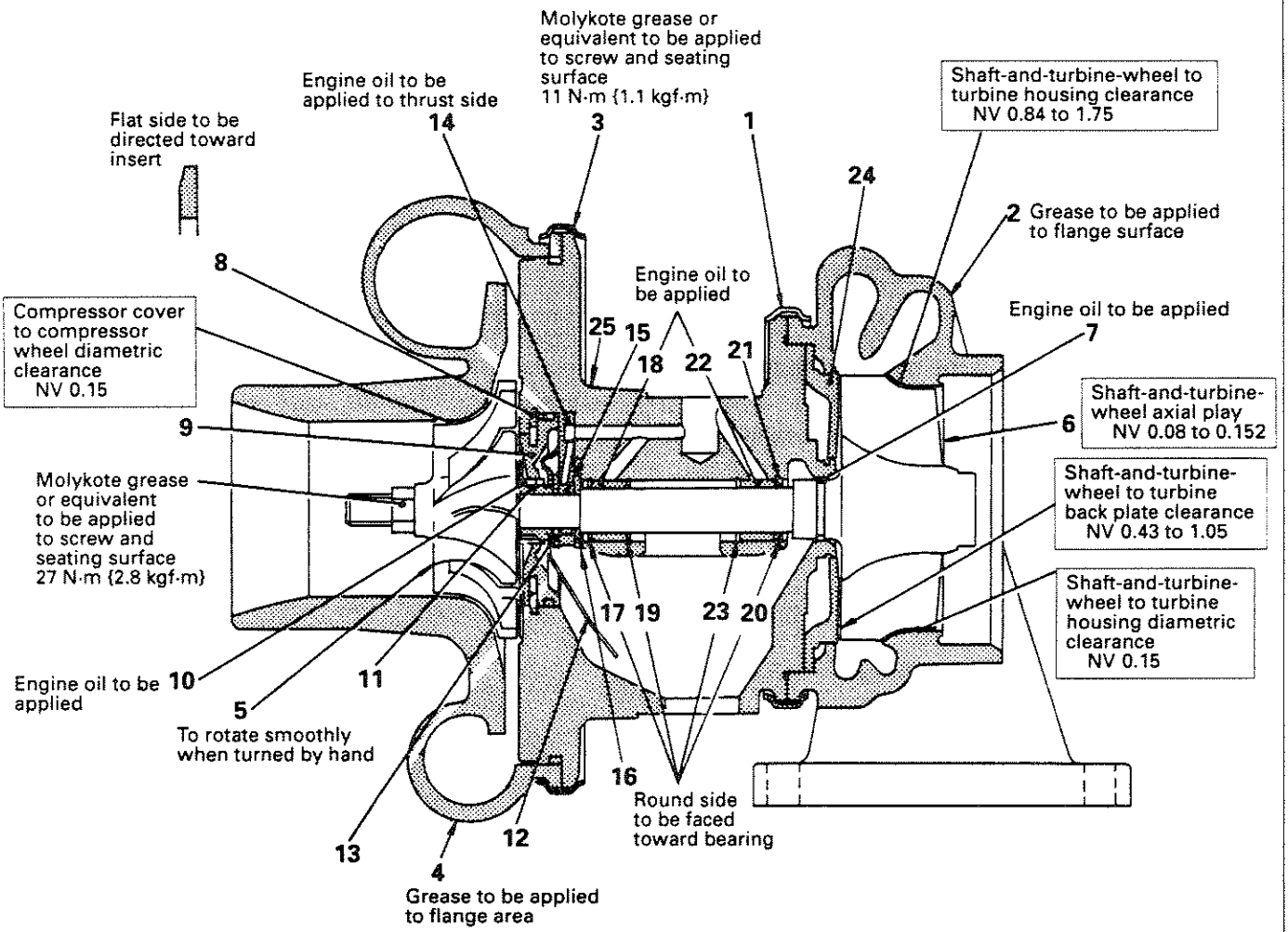

NV .. Nominal Value

Assembly sequence

25→24→㉓→22→21→⑳→⑲
→18→⑰ ┐
6→7 ┘→16→15→⑭

→13→12 ┐
11→10 ┘→9→8→5→4→3→2→1

For parts with an encircled number, refer to Reassembly Procedure that follows.

NOTE:

1. **Piston rings cannot be reused; be sure to use a new one. Also, do not expand piston rings more than is necessary since they break easily.**
2. **Apply engine oil to all moving parts before installation.**
3. **When fitting the compressor cover and turbine housing, use the alignment marks on them and the bearing housing.**

B4268A

Reassembly Procedure

(a) Installation of snap rings

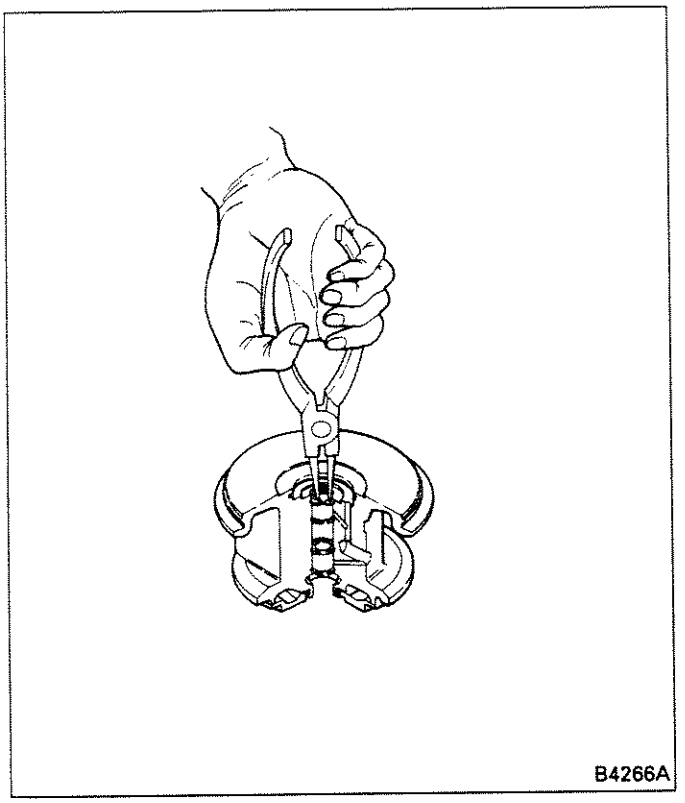

Use pliers (tip diameter 1 mm) in installing snap rings.

NOTE:
Install each snap ring with its round side toward the bearing.

(b) Installation of thrust bearing

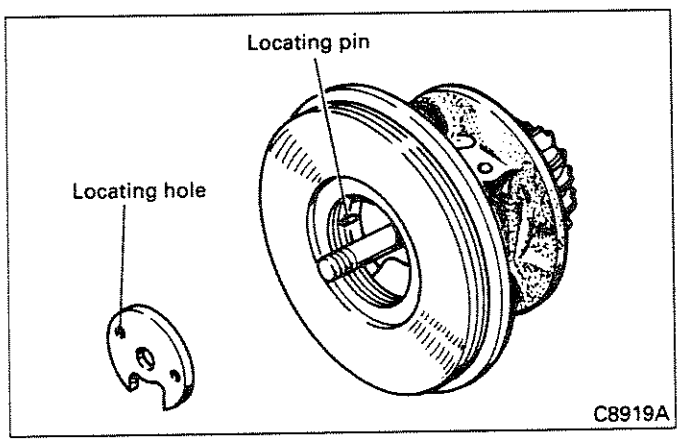

To install the thrust bearing, apply engine oil to the thrust receiving side. Press it in with its locating hole in alignment with the locating pin of the bearing housing until it is in flat contact with the bearing housing.

(c) Measurement of clearances between shaft-and-turbine-wheel and turbine housing, and compressor wheel and compressor cover in diametrical direction

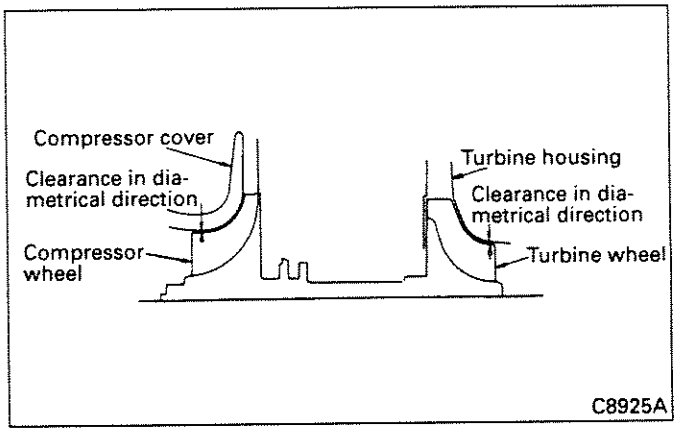

Measure each clearance with a thickness gauge to check that it is within the nominal value.

NOTE:
When a clearance is to be measured, press the shaft in the axial direction to minimize the clearance.

5.4.3 3LM type turbocharger

For instructions on disassembly, inspection, cleaning, and reassembly other than those shown here, refer to section 5.4.1.

(1) Disassembly

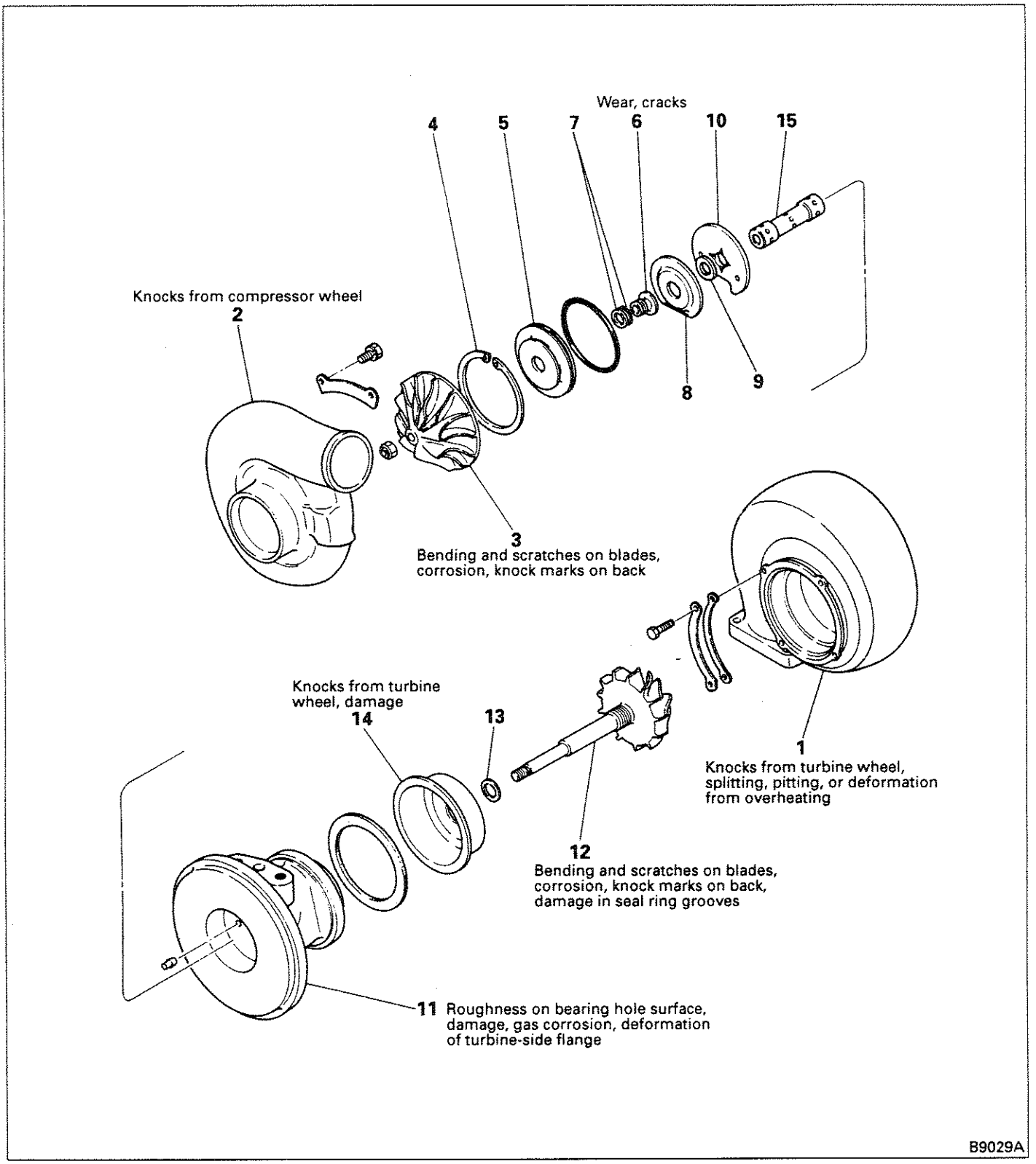

Disassembly sequence

① Turbine housing
② Compressor cover
3 Compressor wheel
4 Snap ring
5 Insert
6 Flinger sleeve
7 Piston ring
8 Oil deflector
9 Thrust ring
10 Thrust bearing
11 Bearing housing
12 Shaft-and-turbine-wheel
13 Piston ring
14 Turbine backplate
15 Bearing

For parts with an encircled number, refer to Disassembly Procedure that follows.

NOTE:
1. **Before disassembly, draw alignment marks on the compressor cover, bearing housing, and turbine housing to facilitate later reassembly.**
2. **The blades of the compressor wheel and turbine wheel bend easily. Be careful not to drop or crush these items.**
3. **Do not remove the bearing housing pins (2 places).**

Disassembly Procedure

(a) Removing turbine housing

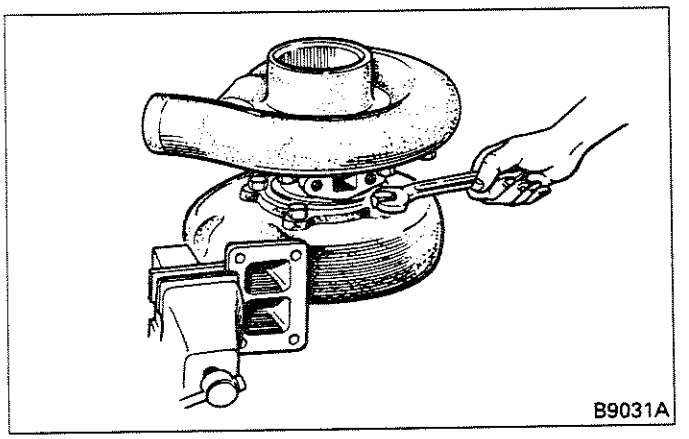

(b) Removing compressor cover

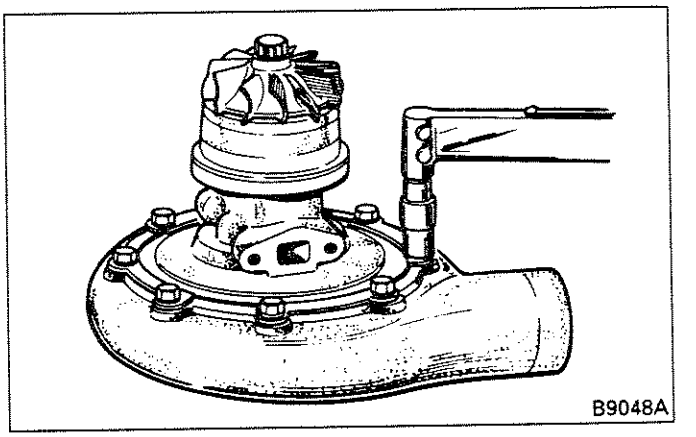

(2) Cleaning and inspection

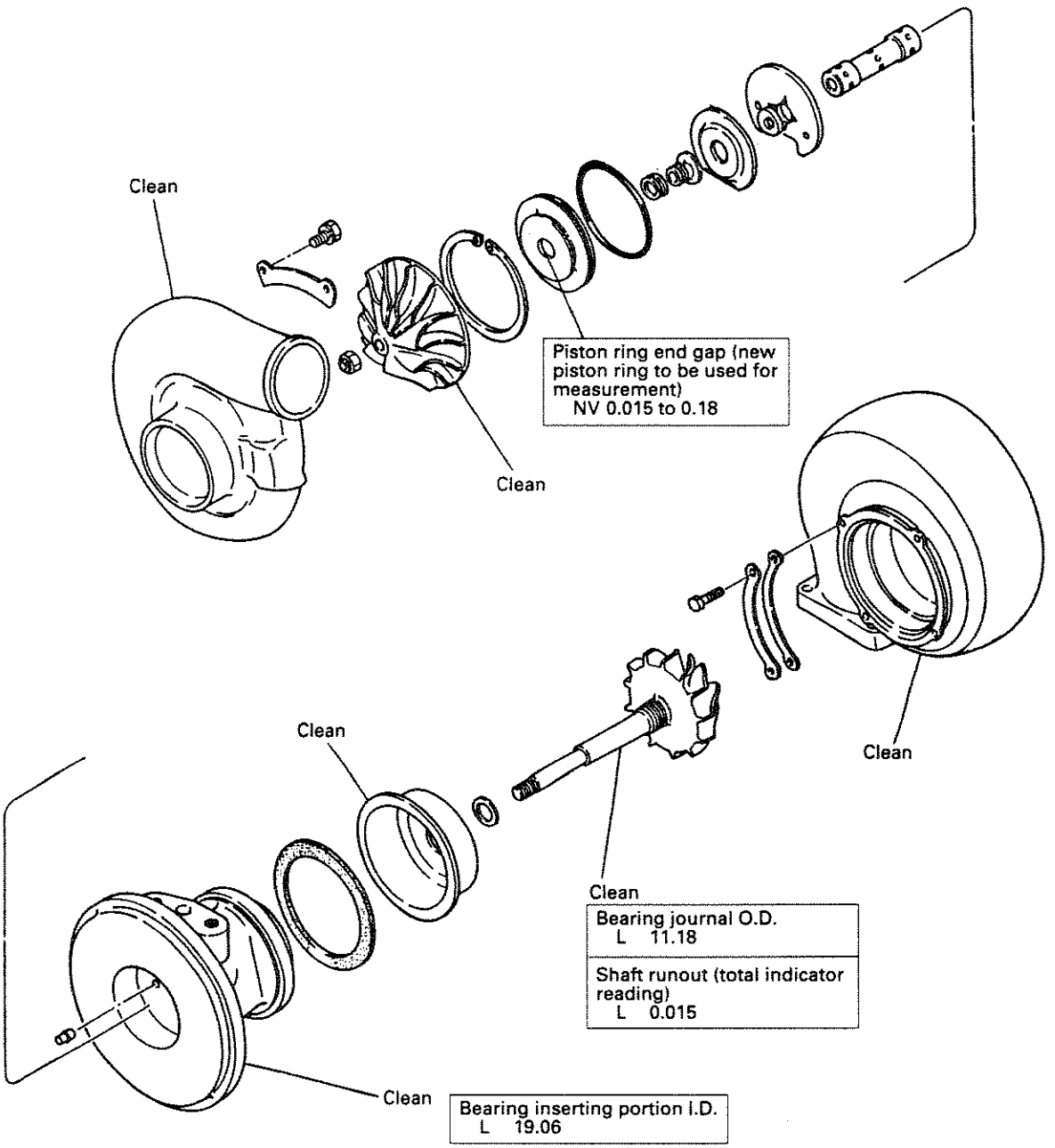

NV .. Nominal Value
L..... Limit

NOTE:
Before cleaning, visually inspect each component to find any scorching or rubbing that will not be apparent after cleaning. For details, refer to item (1) of section 5.4.3.

B9034B

(3) Reassembly

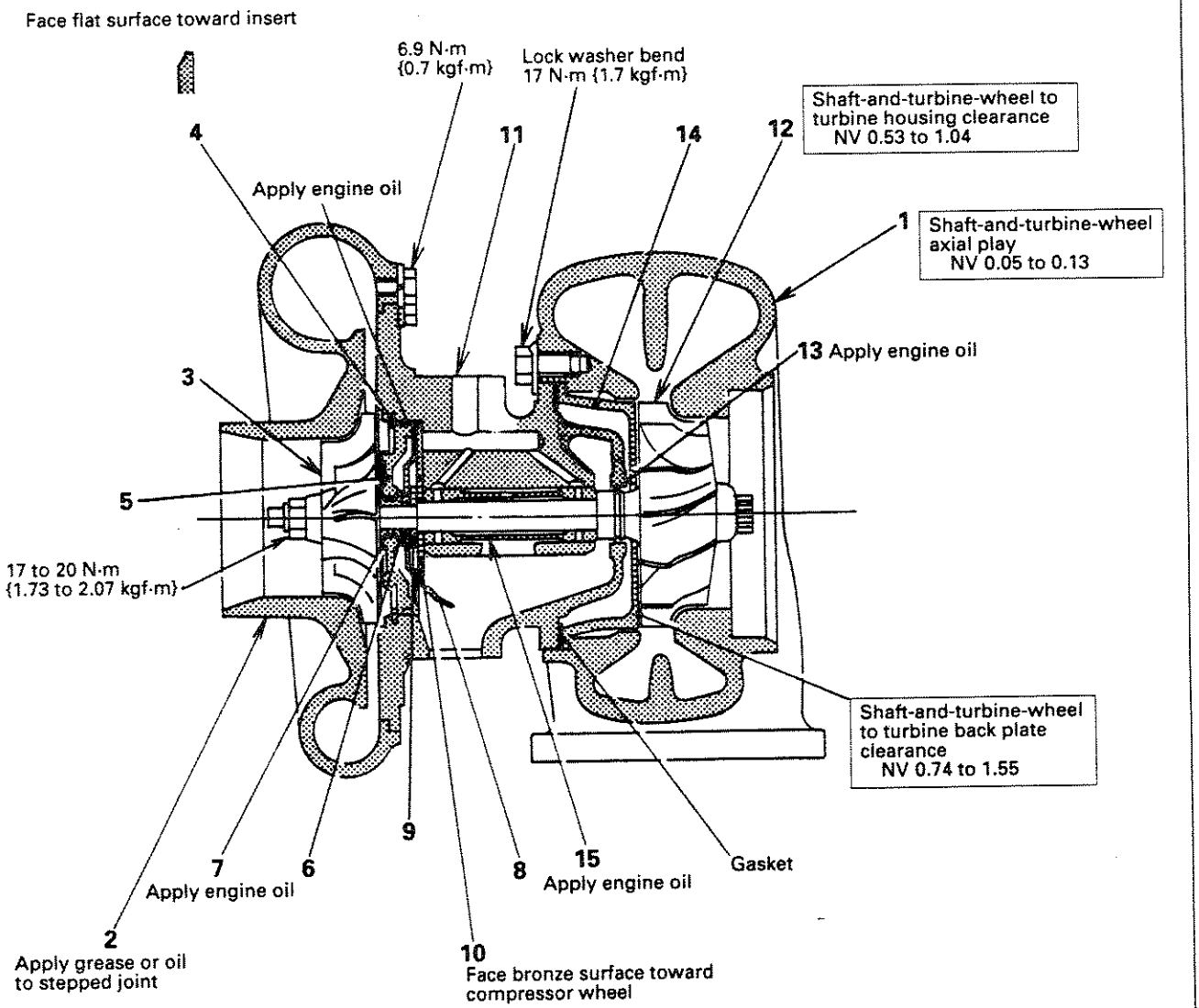

NV .. Nominal Value

Assembly sequence

11→14→13→12→15→⑩→9→8 ┐
5→7→6 ┘ →4→3→②→①

For parts with an encircled number, refer to Reassembly Procedure that follows.

NOTE:

1. **Piston rings cannot be reused; be sure to use a new one. Also, do not expand piston rings more than is necessary since they break easily.**
2. **Apply engine oil to all moving parts before installation.**
3. **When fitting the compressor cover and turbine housing, use the alignment marks on them and the bearing housing.**

B9037A

Reassembly Procedure

(a) Fitting thrust bearing

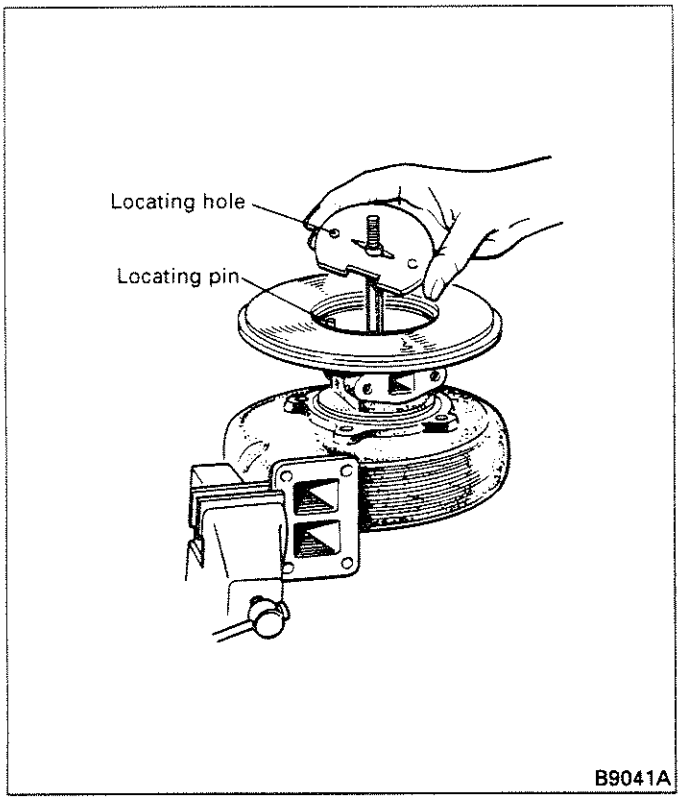

Apply engine oil to both faces of the thrust bearing. Align the thrust bearing with the locating pin on the bearing housing, then push the thrust bearing onto the bearing housing until it sits flat.

(b) Fitting compressor cover

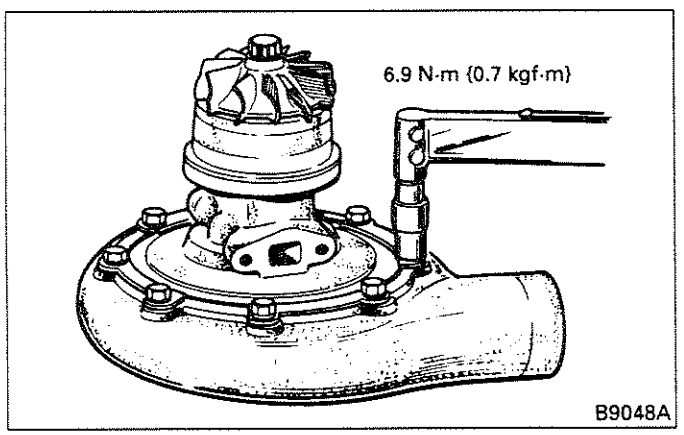

Fit the compressor cover and bearing housing with its cap screws, tightening the cap screws to the specified torque.

(c) Fitting turbine housing

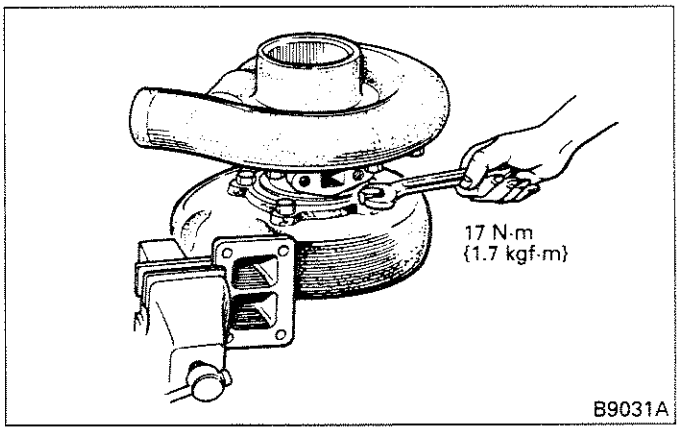

Fit the turbine housing with its cap screws, tightening the cap screws to the specified torque.

NOTE:

Apply antiseize compound to the cap screws.

5.5 Intercooler

5.5.1 Disassembly and reassembly

(1) Water-cooled type

<6D22-TC, 24-TC>

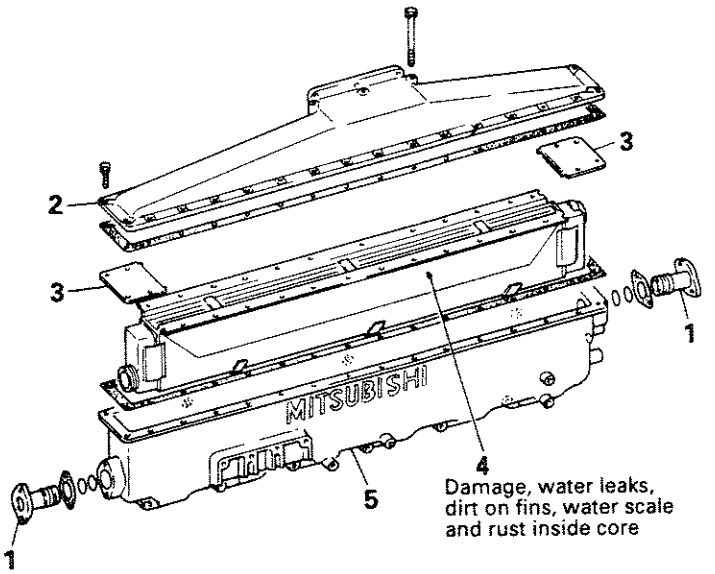

C9305B

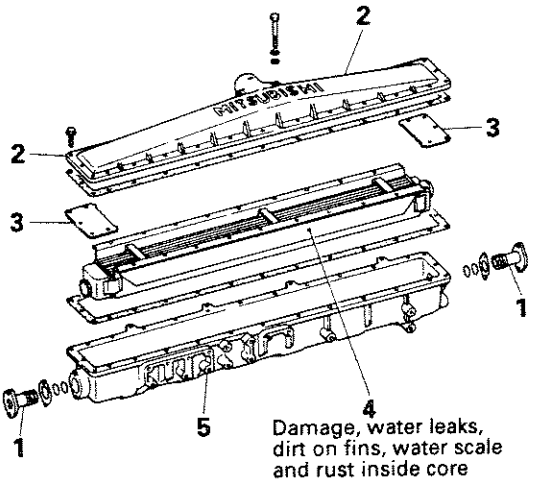

C9305C

<8DC9-TC>

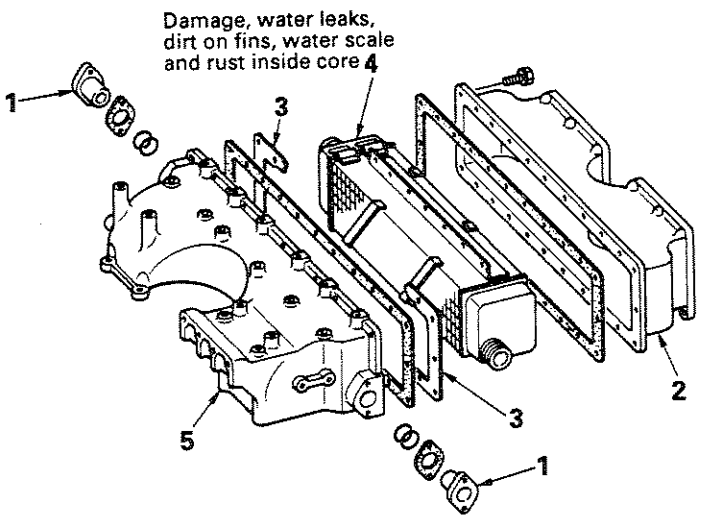

1 Connector
2 Cover
3 Plate
4 Core assembly
5 Inlet manifold

B4886A

(2) Air-cooled type

<8DC9-TL>

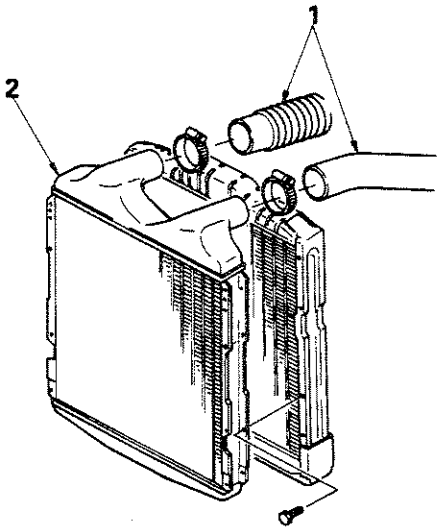

1 Air intake hose
2 Intercooler

B4157A

5.5.2 Air pressure test

(1) Inspection of core assembly <6D22-TC, 24-TC, 8DC9-TC>

Conduct the air pressure test to check for water leaks due to damaged element. To check, apply an air pressure of 390 kPa {4 kgf/cm^2} to the core assembly. Replace the core assembly if it is leaking air or otherwise defective.

NOTE:
Never apply pressure over specification.

(2) Inspection of intercooler <8DC9-TL>

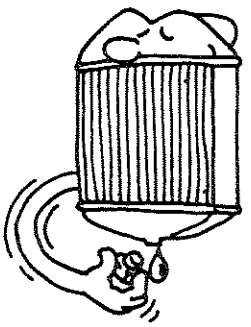

C9007B

(a) Remove the drain plug from the intercooler lower tank to discharge collected condensate.

(b) Remove the intercooler and use copper wire or the like to remove mud, insects, etc. from the front side of intercooler core, using care not to damage the tube.

(c) Air-tightness check

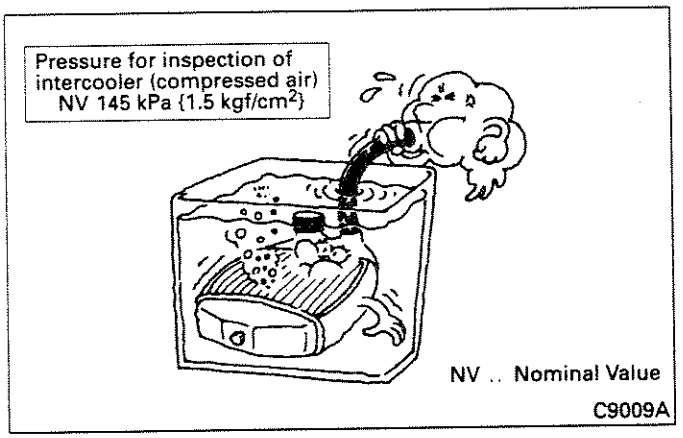

Immerse the intercooler in a water tank with one opening for air closed and with the other opening connected to a hose. Send compressed air at specified test pressure through the hose and make sure that there is no air leak.

5.6 Bleeding of Aftercooler Coolant Circuit

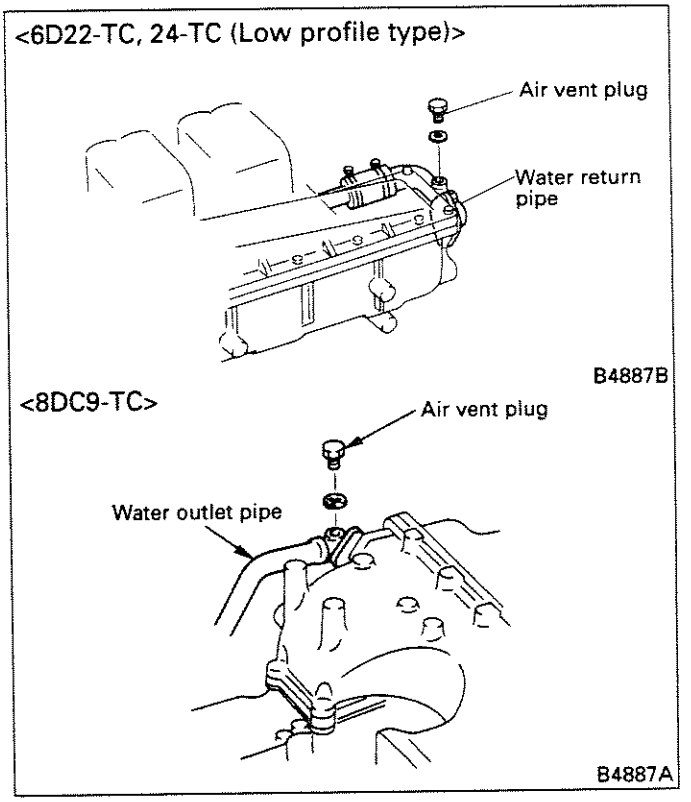

(a) Remove the air vent plug from the water outlet pipe.

(b) Pour coolant into the radiator until coolant flows out from the air vent. Install the air vent plug.

(c) With the pressure cap left removed from the radiator, run the engine at idle, keeping coolant temperature of about 90°C, to thoroughly bleed the system.

(d) After the air in the coolant circuit has been thoroughly bled, add coolant as necessary to the radiator and reservoir tank.

6. TROUBLESHOOTING

Symptom	Probable cause	Remedy	Ref. group
Low output	Insufficient intake air • Loaded air cleaner element	Clean	
	• Air suction (with dust and other foreign matter) from intake system	Correct	
	• Defective turbocharger • Turbocharger rotation failure		
	• Seized bearing	Replace	
	• Carbon deposit on turbine wheel	Clean	
	• Turbine wheel and turbine back plate interfering	Check	
	• Turbine wheel and turbine housing interfering	Check	
	• Bent shaft-and-turbine-wheel	Replace	
	• Compressor wheel and compressor housing interfering	Check	
	• Seized thrust sleeve and/or thrust bearing	Replace	
	• Incorrect sliding between inside parts due to clogged lubricating oil pipe	Clean, check	
	• Damaged compressor wheel	Replace	
	• Damaged turbine wheel	Replace	
	• Foreign matter on front surface of intercooler core <8DC9-TL>	Clean	
	Low exhaust efficiency • Deformed front pipe, muffler and/or tail pipe (large exhaust resistance)	Replace	
	• Defective turbocharger • Turbocharger rotation failure (See above.)	Check	
	• Damaged turbine wheel	Replace	
Whitish and much exhaust gas	Incorrect injection timing	Adjust	Group 13
	Low compression pressure	Check	Group 11
	Poor quality fuel	Replace	Group 13
	Defective turbocharger • Oil leaks due to worn piston ring, and/or insert	Replace	
	• Damaged oil seal due to clogged oil return pipe	Replace	
Dark and much exhaust gas	Loaded air cleaner element	Clean	
	Trouble in engine proper	Check	Group 11
	Nonuniform fuel injection amount to cylinders	Adjust	Group 13
	Incorrect injection timing	Adjust	Group 13
Abnormal noise and/or vibration from intake and exhaust system	Poor connection of intake and exhaust systems	Correct	
	Deformed front pipe, muffler or tail pipe (large exhaust resistance)	Replace	
	Defective turbocharger (See above.)	Check	

ENGINE ELECTRICAL

CONTENTS

1. GENERAL 2
1.1 Starter 4
1.2 Alternator 6
1.3 Safety Relay 11
1.4 Regulator 13
1.5 Intake Air Heater 17
1.6 Automatic Stop System 18
1.6.1 Shutdown type 19
1.6.2 Run-on type 21
2. SPECIFICATIONS 24
3. SERVICE STANDARDS 27
3.1 Service Standards Table 27
3.2 Tightening Torque Table 34
4. SPECIAL TOOL 34
5. SERVICE PROCEDURE 35
5.1 Starter 35
5.1.1 Removal and installation 35
5.1.2 Disassembly 36
5.1.3 Inspection 43
5.1.4 Reassembly 49
5.1.5 Inspection and adjustment after reassembly 58
5.2 Starter Relay 60
5.3 30 A, 35 A, 40 A <except A4T57471>, 80 A Alternators (with brush type) 61
5.3.1 Removal and installation 61
5.3.2 Disassembly 63
5.3.3 Inspection 67
5.3.4 Reassembly 74
5.3.5 Inspection and adjustment after installation 76
5.4 40 A Alternator <A4T57471> (with brush type) 81
5.4.1 Removal and installation 81
5.4.2 Disassembly and inspection 81
5.4.3 Reassembly 82
5.4.4 Testing 82
5.5 40 A, 50 A Alternators (brushless type) 83
5.5.1 Removal and installation 83
5.5.2 Disassembly 83
5.5.3 Inspection 86
5.5.4 Reassembly 89
5.5.5 Inspection and adjustment after installation 90
5.6 90 A Alternator (brushless type) 91
5.6.1 Removal and installation 91
5.6.2 Disassembly 91
5.6.3 Inspection 93
5.6.4 Reassembly 97
5.6.5 Inspection and adjustment after reassembly 98
5.7 60 A, 110 A, 150 A Alternators 100
5.7.1 Removal and installation 100
5.7.2 Disassembly 100
5.7.3 Inspection 102
5.7.4 Reassembly 104
5.7.5 Inspection and adjustment after reassembly 105
5.8 Regulator Inspection and Adjustment 105
5.9 Safety Relay Inspection 107
5.10 Preheater 109
5.10.1 Intake air heater 109
5.10.2 Heater relay 109
5.11 Automatic Stop System 110
5.11.1 Shut down type 110
5.11.2 Run-on type 115
6. TROUBLESHOOTING 121

1. GENERAL

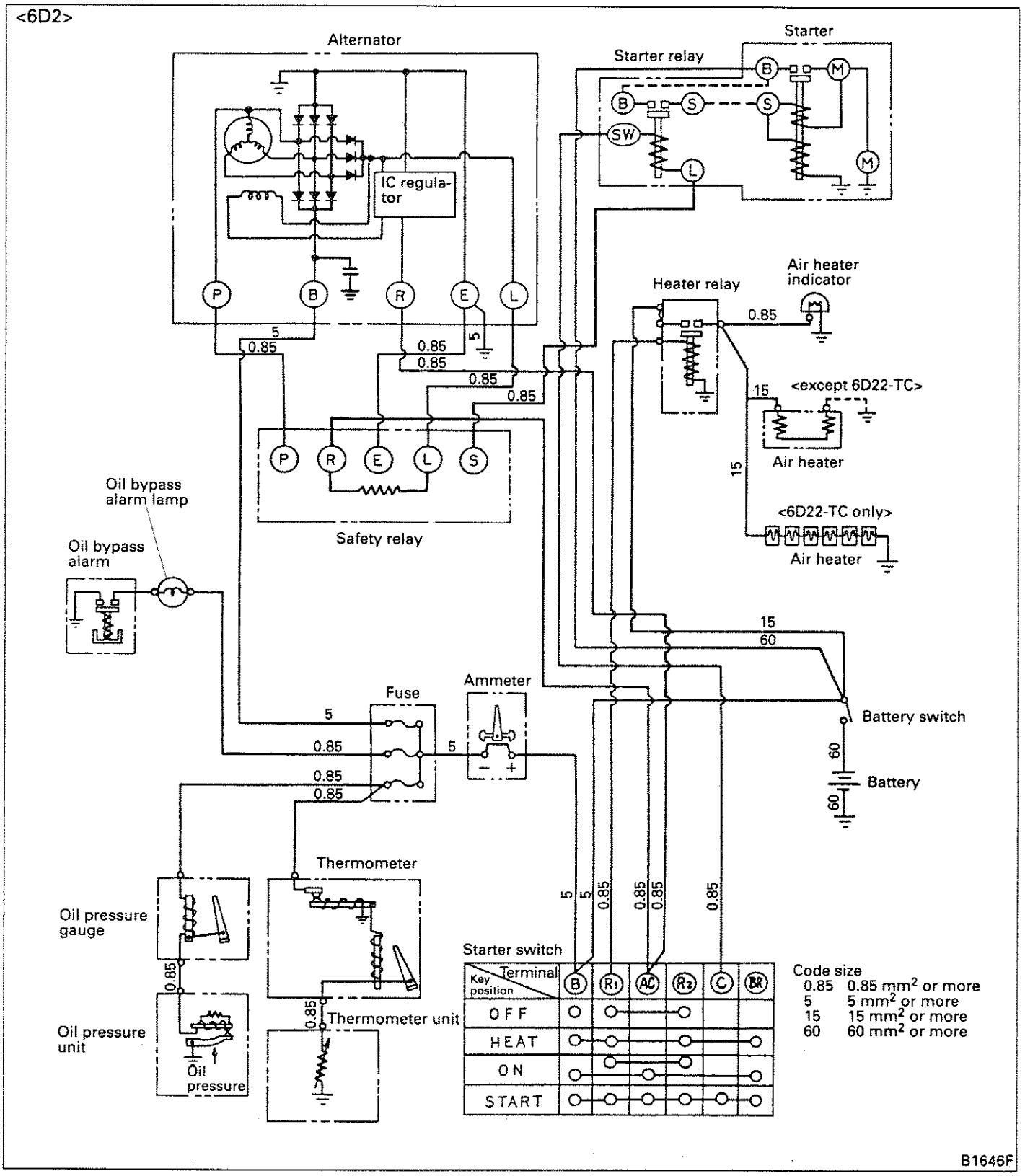
<6D2>
Alternator
IC regulator
Starter
Starter relay
Heater relay
Air heater indicator
<except 6D22-TC>
Air heater
<6D22-TC only>
Air heater
Safety relay
Oil bypass alarm lamp
Oil bypass alarm
Fuse
Ammeter
Battery switch
Battery
Thermometer
Oil pressure gauge
Oil pressure unit
Oil pressure
Thermometer unit
Starter switch
Key position
Terminal
OFF
HEAT
ON
START
Code size
0.85 0.85 mm² or more
5 5 mm² or more
15 15 mm² or more
60 60 mm² or more
B1646F

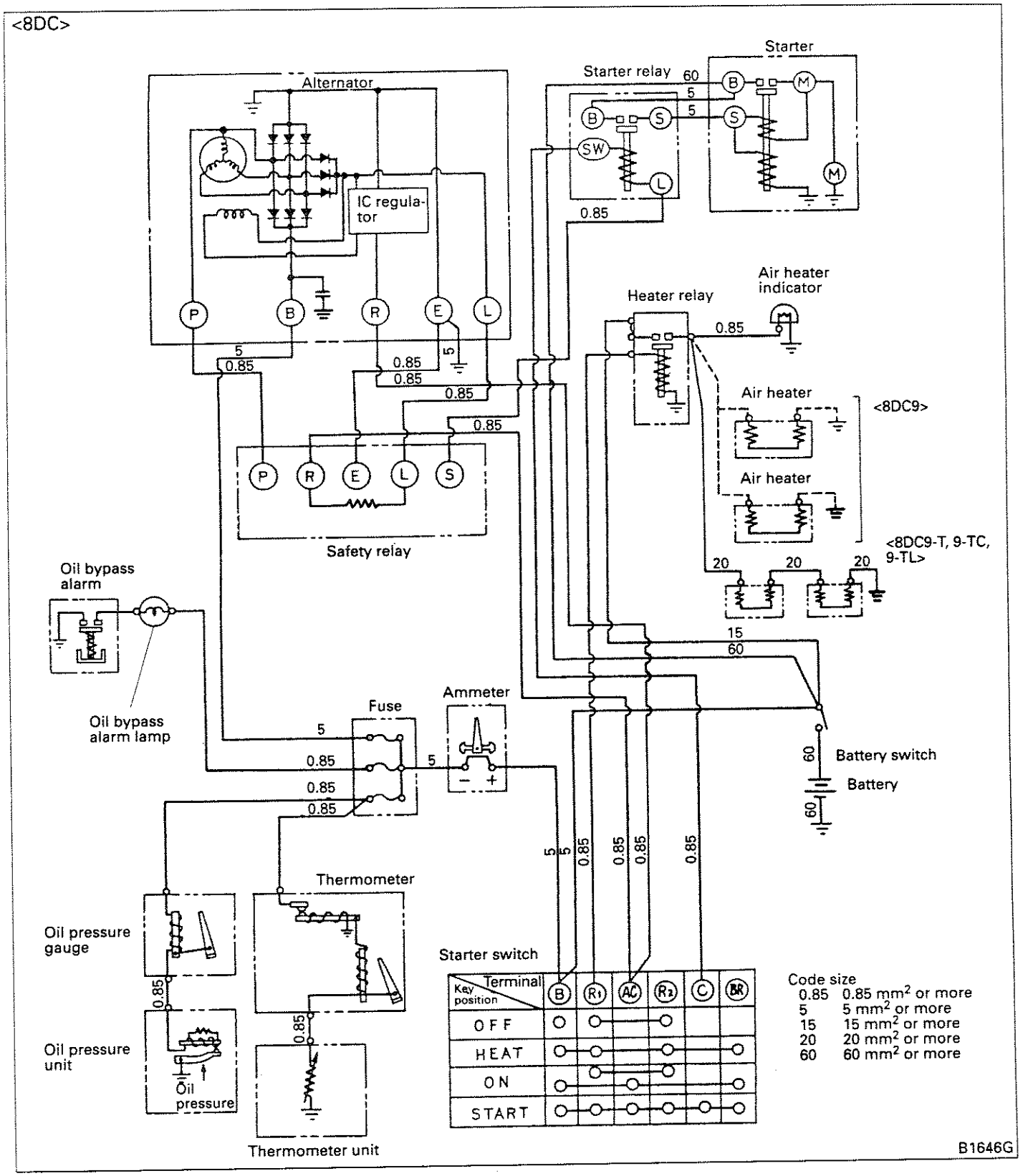
<8DC>
Alternator
IC regulator
P
B
R
E
L
Starter relay
Starter
SW
S
M
60
5
0.85
Heater relay
Air heater indicator
Air heater
<8DC9>
Air heater
<8DC9-T, 9-TC, 9-TL>
20
Safety relay
Oil bypass alarm
Oil bypass alarm lamp
15
Fuse
Ammeter
Battery switch
Battery
Thermometer
Oil pressure gauge
Oil pressure unit
Oil pressure
Thermometer unit
Starter switch
Key position
Terminal
OFF
HEAT
ON
START
Code size
0.85 0.85 mm² or more
5 5 mm² or more
15 15 mm² or more
20 20 mm² or more
60 60 mm² or more
B1646G

1.1 Starter

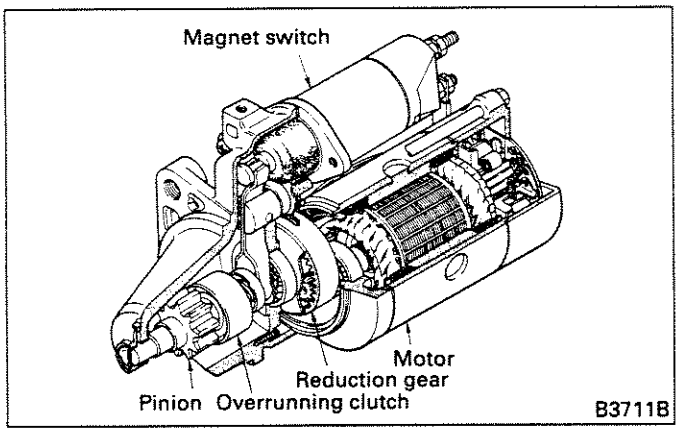

The starter is a reduction starter with a built-in reduction gear. Its motor has been downsized with even higher speed capability.
Major components of the starter are: motor section generating power; the overrunning clutch section transmitting armature torque and preventing the engine from overrunning after startup; the magnetic switch section which puts the pinion in mesh with the ring gear and feeds load current into the motor; and, the reduction gear and transmitting torque to the pinion.

(1) Reduction gear section

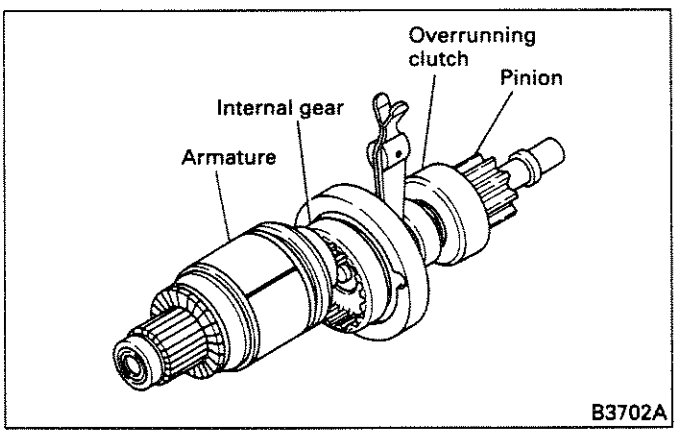

The end of the armature shaft is shaped as a gear and is in mesh with the internal gear.

(2) Overrunning clutch section

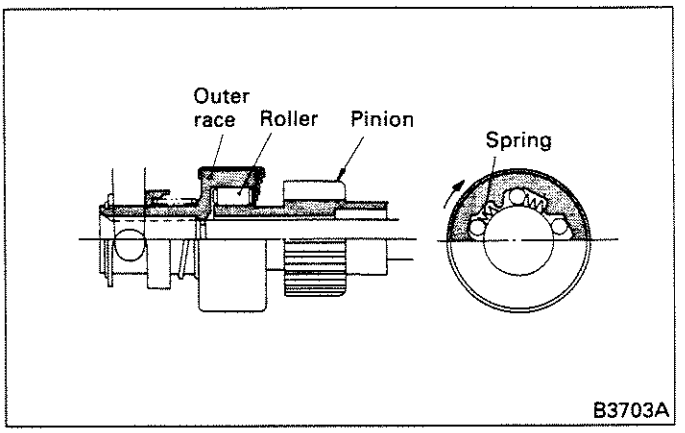

The overrunning clutch is of roller type.
Each roller is set in the wedge-shaped groove provided by the outer and inner races (pinion) and is pressed by a spring.
The roller is pressed against the narrower side of the groove by the spring transmitting outer race rotation to the pinion by its wedge action. On the other hand, no torque is transmitted from the pinion as the roller moves to the wider side releasing the wedge action.

(3) Operation

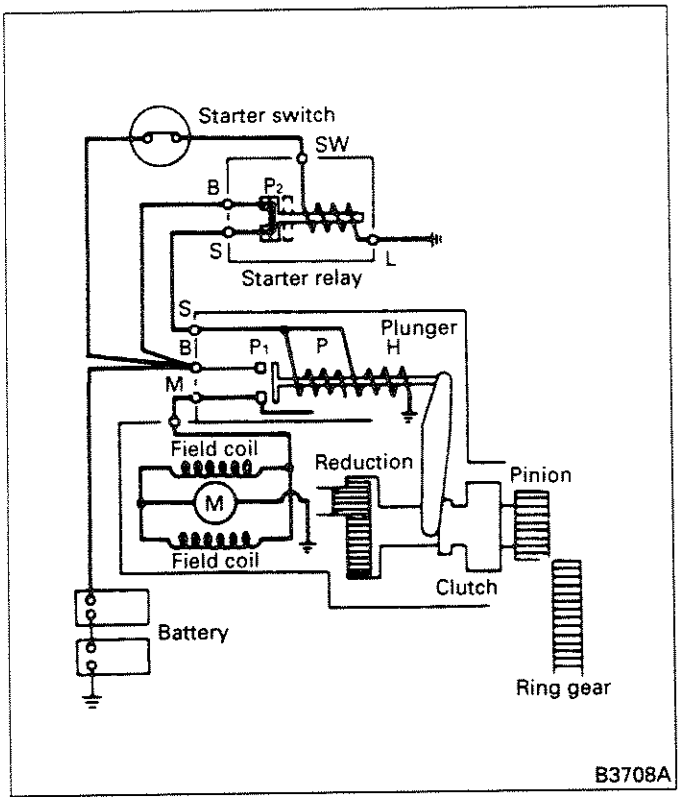

While the starter switch is ON, current flows from the terminal "SW" of the starter relay to the terminal "L" and closes the contact "P_2".
When the contact "P_2" closes, current from the battery flows from the terminal "S" of the magnetic switch to the pull-in coil "P" and holding coil "H".
Furthermore, the current that has decreased flows from the terminal "M" to the motor section.
The plunger, attracted by the magnetic flux of the pull-in coil and holding coil, pushes out the pinion through a lever.

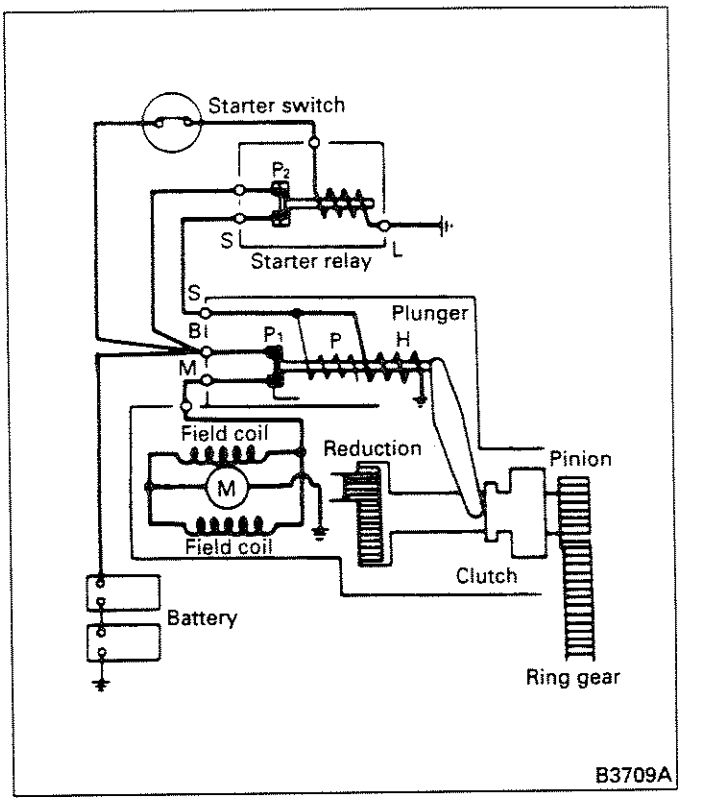

When the pinion comes into complete mesh with the ring gear, the contact "P_1" closes and the large current of the battery directly flows to the motor section to turn the pinion powerfully.
In this condition, no current flows to the pull-in coil. The plunger is retained by the holding coil alone.

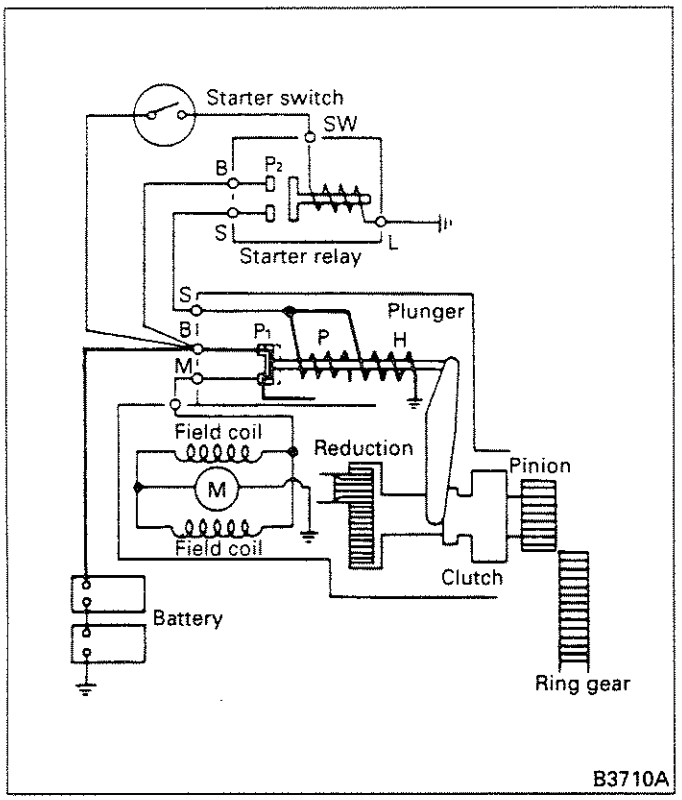

Setting the starter switch to OFF position causes the contact "P_2" to open.
At the moment the starter switch is opened, the "P_1" still remains closed and the battery current flows from the terminal "B" to the pull-in coil "P" and holding coil "H". Since the coil are wound in opposite direction to each other, the magnetic fluxes cancel each other so that the return spring can move the plunger back to its original position. At the same time, the contact "P_1" opens to shut down the current flow to the motor.

1.2 Alternator

(1) 30 A, 35 A, 40 A, 80 A alternator (with brush type)

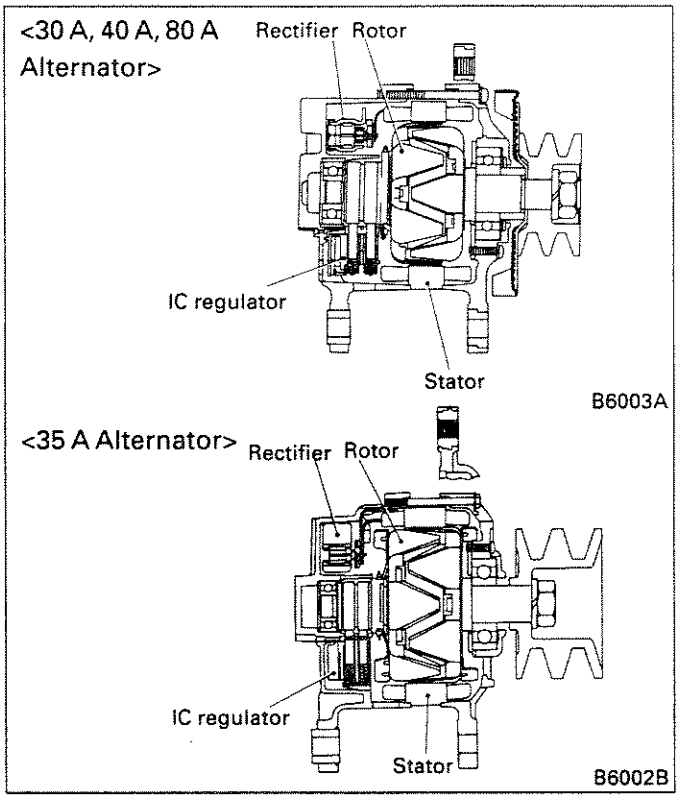

The alternator is a brush type in which a current flows from the brushes through the slip ring to the field coil in the rotor.
Major components include: the rotor (field coil) that generates magnetic field; the stator that generates electromotive force; the rectifier that rectifies electromotive force so generated; the regulator that keeps generated voltage constant.

(a) Rotor

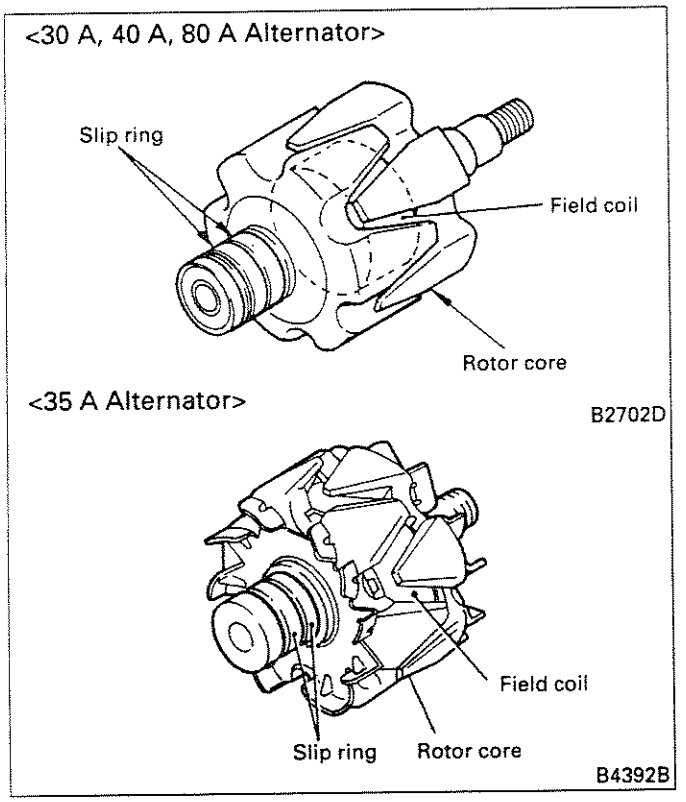

When the rotor is driven by the pulley rotation, a current flows from the brushes, through the slip ring, to the field coil. The rotor core tabs then become magnetic poles.

(b) Stator

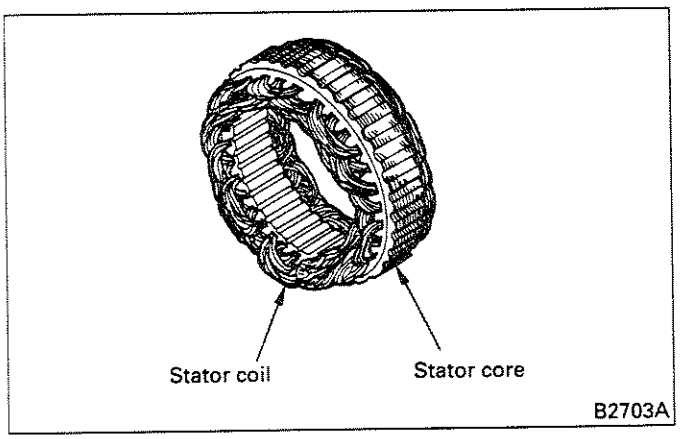

Together with the rotor core, the stator core forms the magnetic flux path. The magnetic flux lines in the stator core are affected by the passage of the rotor core field and generate electricity.

(c) Rectifier

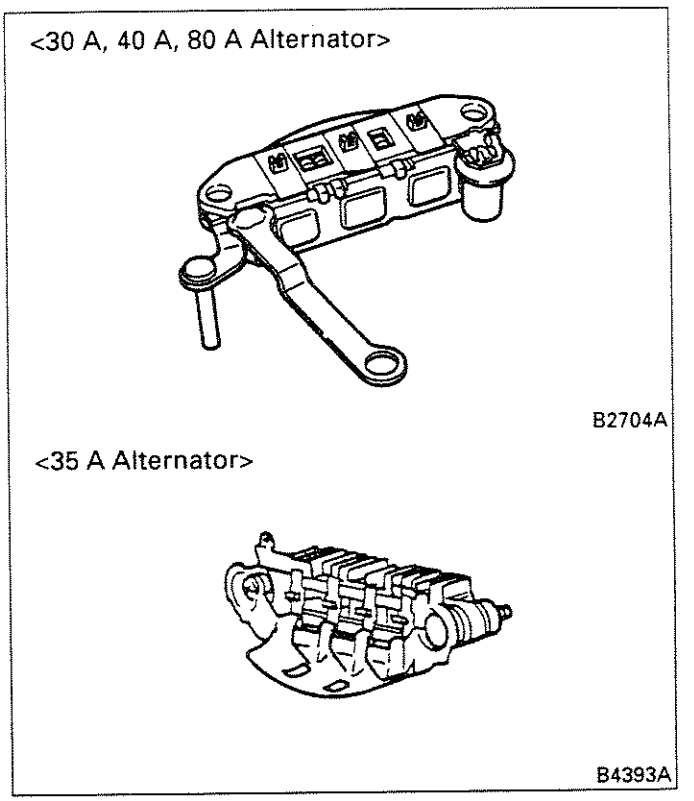

The rectifier mainly consists of 3 diode trios, 6 diodes and 2 heat sinks. It rectifies the AC stator output to DC power.
Each heat sink has the (+) or (–) leads from 3 diodes attached to it, performing full wave rectification for 3-phase AC.
Two rectifiers are used in the 80 A alternator.

(d) Regulator

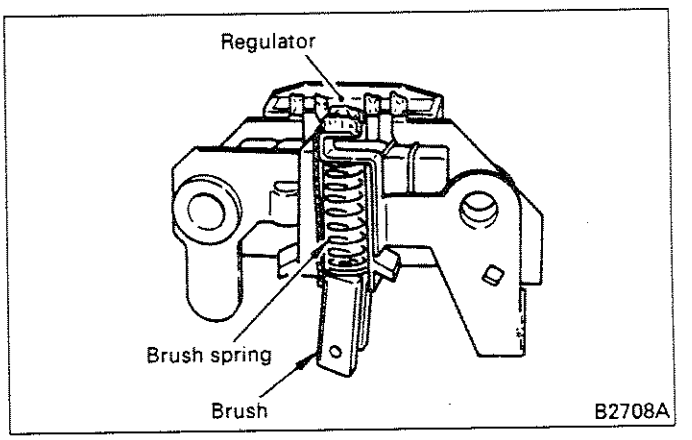

The regulator alters the strength of the field coil field to stabilize output power which varies with engine speed fluctuations.

The regulator is integral with the brush holder. The assembly combines the IC regulator, the brushes and the brush springs.

(e) Charging circuit

1) Turning ON the starter switch

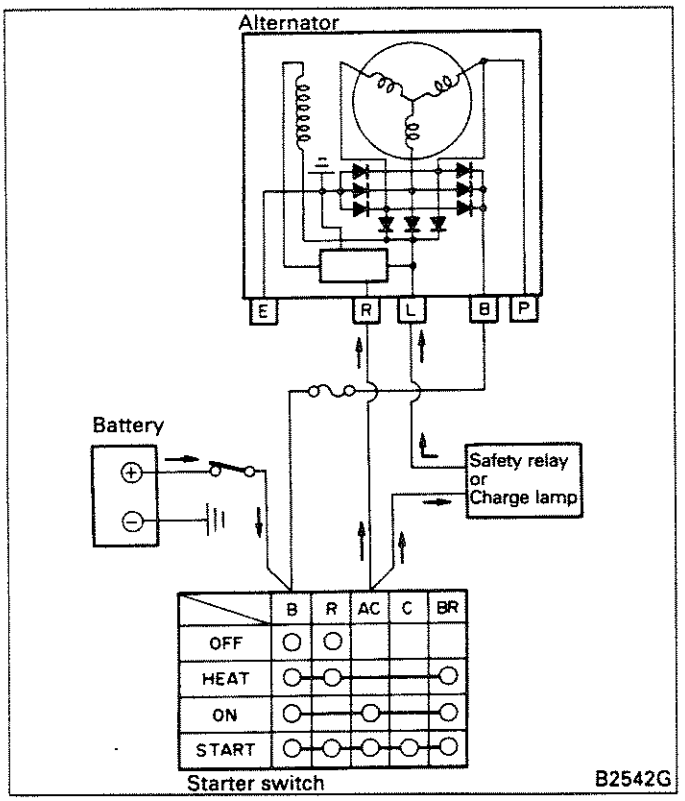

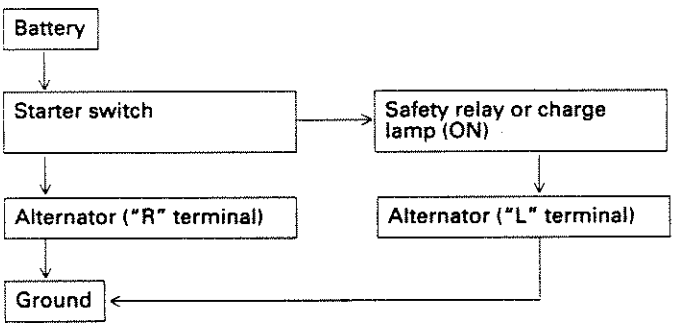

2) Starting the engine

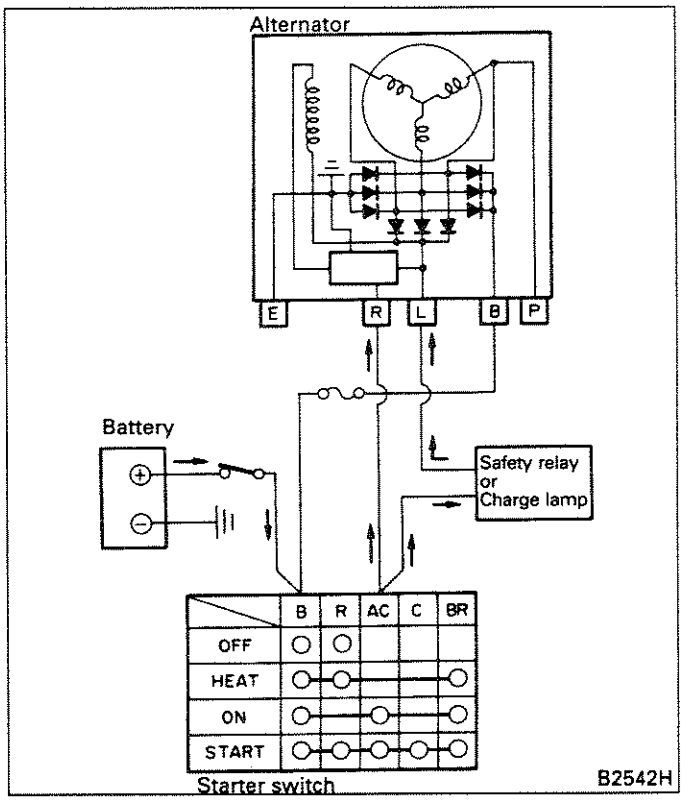

When the engine is started and the alternator starts generation so that the voltage at the alternator "B" terminal becomes higher than the battery voltage, the current flows as shown below.

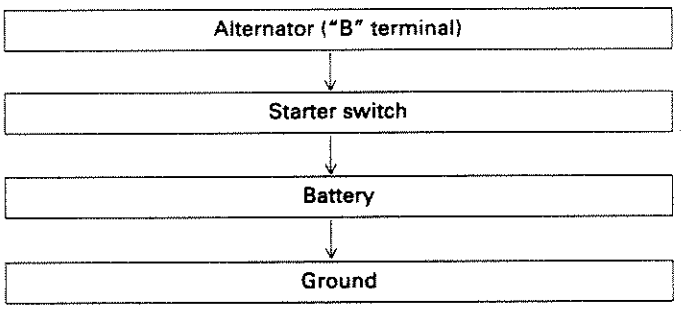

In this way, battery charge is started and at the same time, the charge lamp goes out.

(2) 50A, 90A alternator (brushless type)

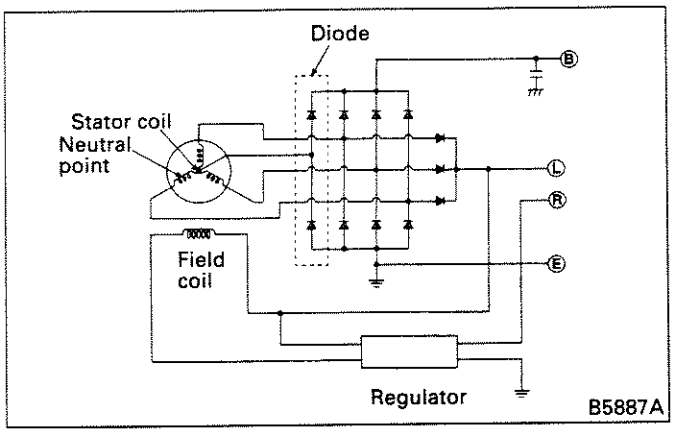

This brushless alternator has neutral point diodes. That is, two diodes are added to the neutral point where three stator coils are connected.
This configuration provides higher DC voltage at high speeds of alternator rotation when compared with the alternator without neutral point diode.

(a) Changes in neutral point electric potential

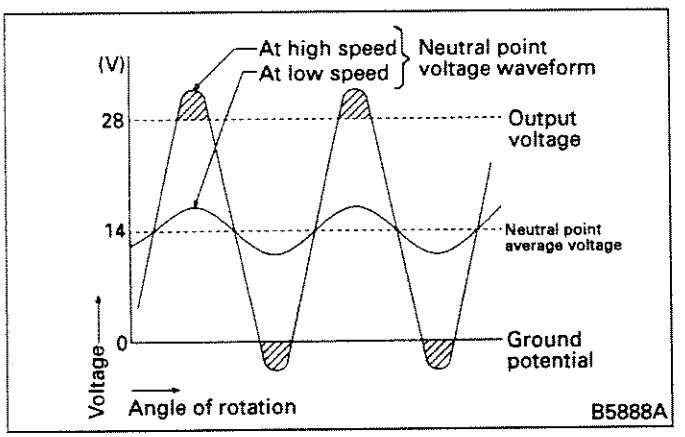

As illustrated, the neutral point's electric potential rises and falls on either side of the neutral point's average DC voltage. (The neutral point's DC voltage is one-half of the alternator's DC output voltage.) At high speeds of rotation, the peak emf generated greatly exceeds the alternator's output voltage. A neutral point diode arrangement eliminates the excess emf.

(b) Neutral point diode operation

- When the neutral point's peak electric potential is 28V or below, only the six normal rectification diodes function.

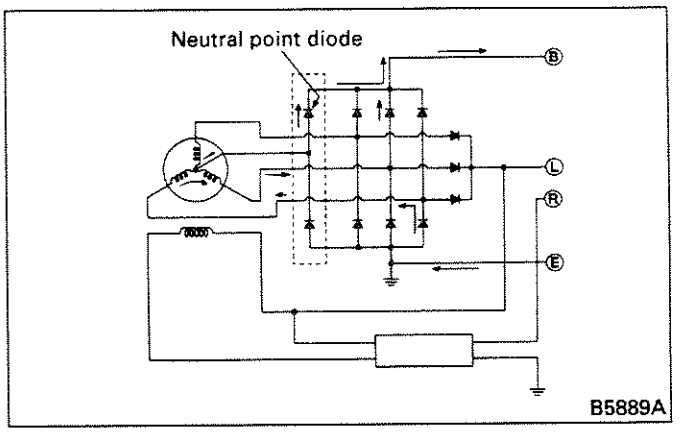

- When the neutral point's peak electric potential exceeds 28V, the neutral point diode arrangement supplements the regular DC output to the vehicle's on-board electrical systems.

(3) 40A alternator (brushless type)

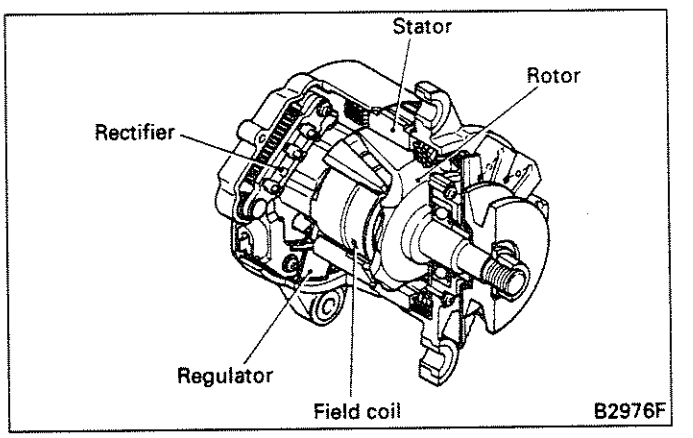

As its name implies, the 40A brushless alternator allows current to flow directly to the field coil without the use of brushes.
The alternator's key components are as follows: the field coil (which generates the required magnetic field); the stator (which generates electromotive force), the rectifier (which converts the generated AC waveform into direct current); and the regulator (which maintains the generated emf at a constant level).

(a) Field coil

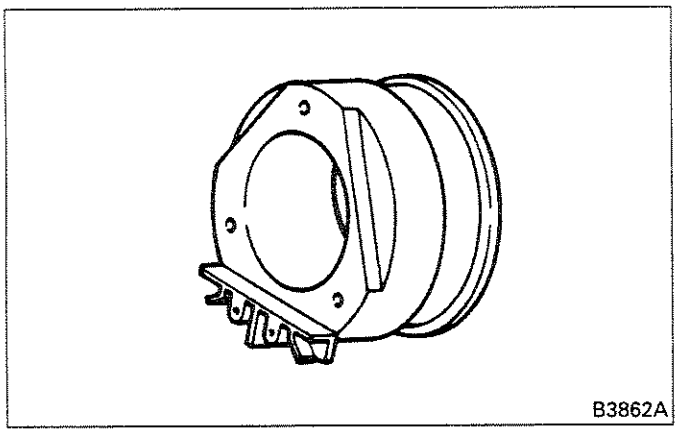

The field coil, secured onto the rear bracket, receives current from the terminal and generates magnetic field.

(b) Rotor

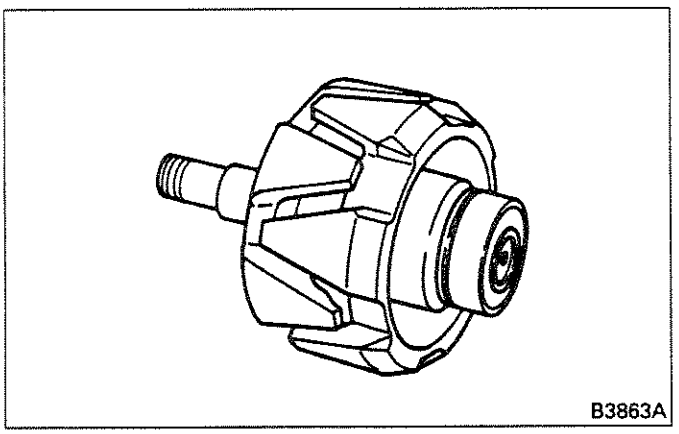

The rotor is rotated by the pulley to surround the field coil. By the magnetic field generated by the field coil, the rotor core tabs become magnetic poles.

(c) Stator

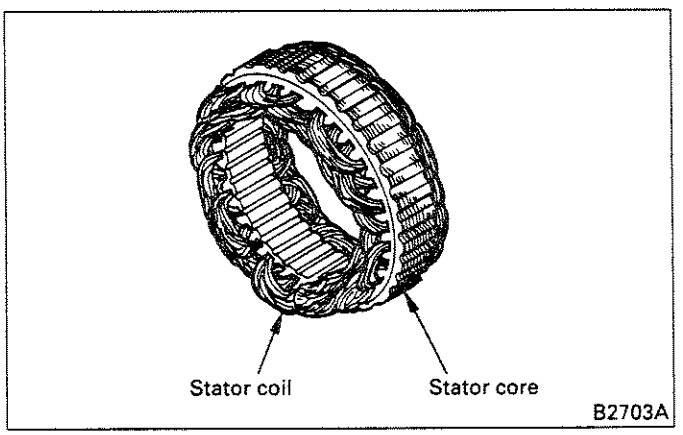

Together with the rotor coil, the stator core forms the magnetic flux path. The magnetic flux lines in the stator core are affected by the passage of the rotor core field and generate electricity.

(d) Rectifier

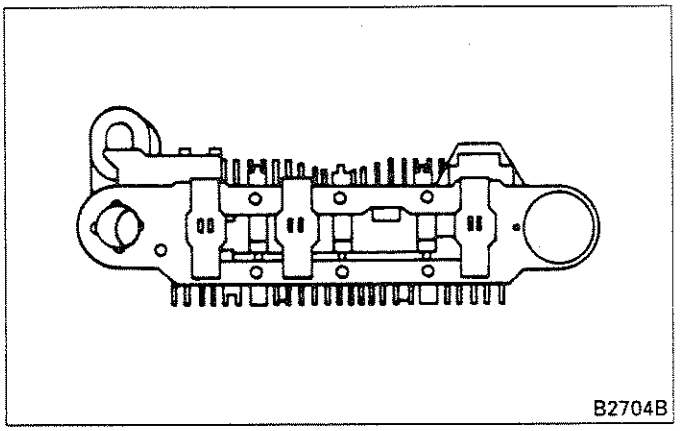

The rectifier mainly consists of 3 diode trios, 6 diodes and 2 heat sinks. It rectifies the AC stator output to DC power.
Each heat sink has the (+) or (–) leads from 3 diodes attached to it, performing full wave rectification for 3-phase AC.

(e) Regulator

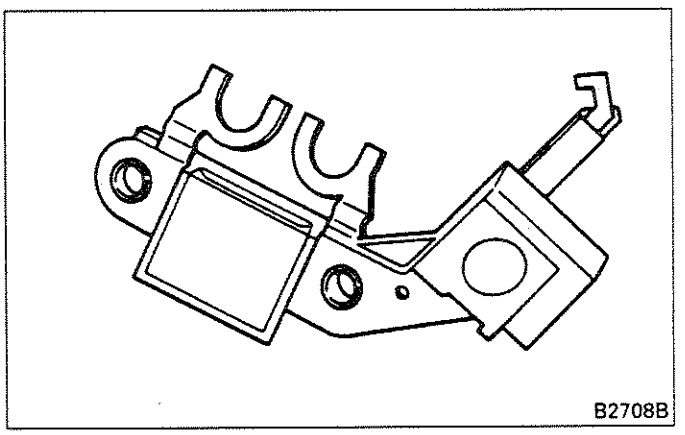

The regulator alters the strength of the field coil field to stabilize output power which varies with engine speed fluctuations.

(f) Charging circuit

Refer to Item (1) (e) Alternator with brush.

(4) 60A, 110A, 150A alternator (with brush type)

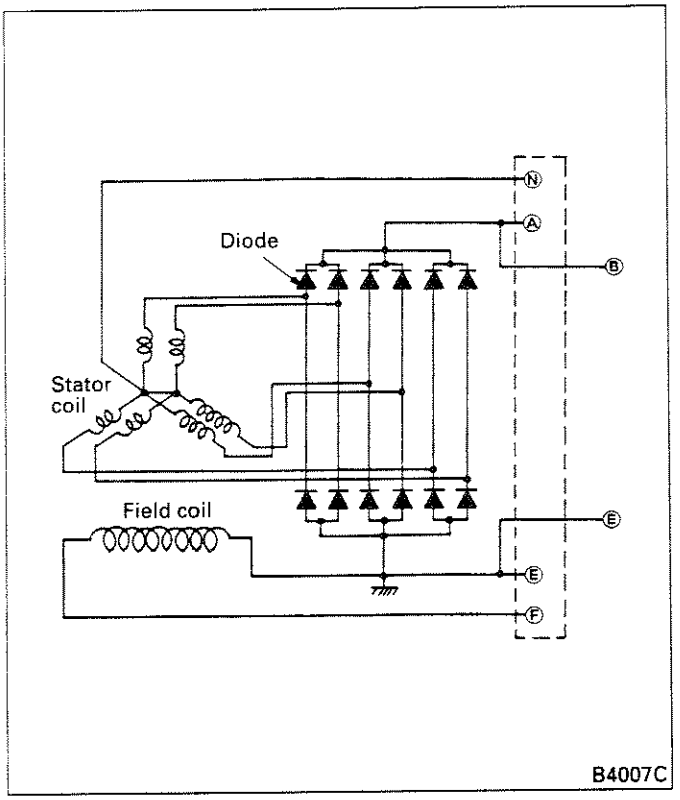

The alternator is an open type three-phase alternator. The three-phase AC generated in the stator coil is converted into DC by the silicon diodes.
A total of 12 diodes (6 on the positive side and 6 on the negative side) are housed in 6 heat sinks, two in each heat sink.
The alternator generated voltage is controlled by the regulator.

1.3 Safety Relay

<R8T30171, R8T30172, R8T30174, R8T30274>

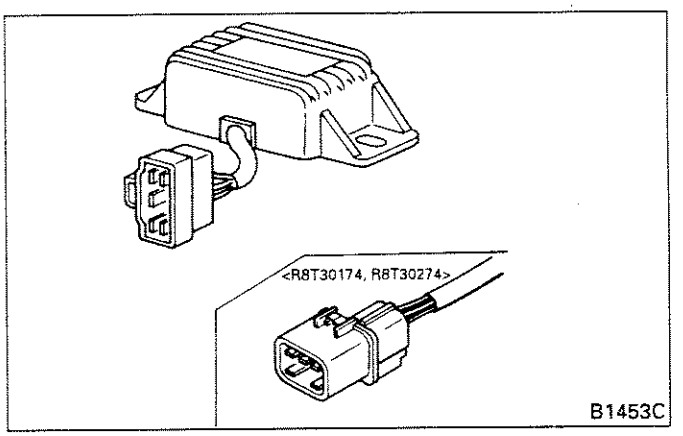

The alternator rpm is detected and when it exceeds the reference level, the safety relay prevents the starter from operating even if its switch is accidentally turned on during engine revolution.

Operation

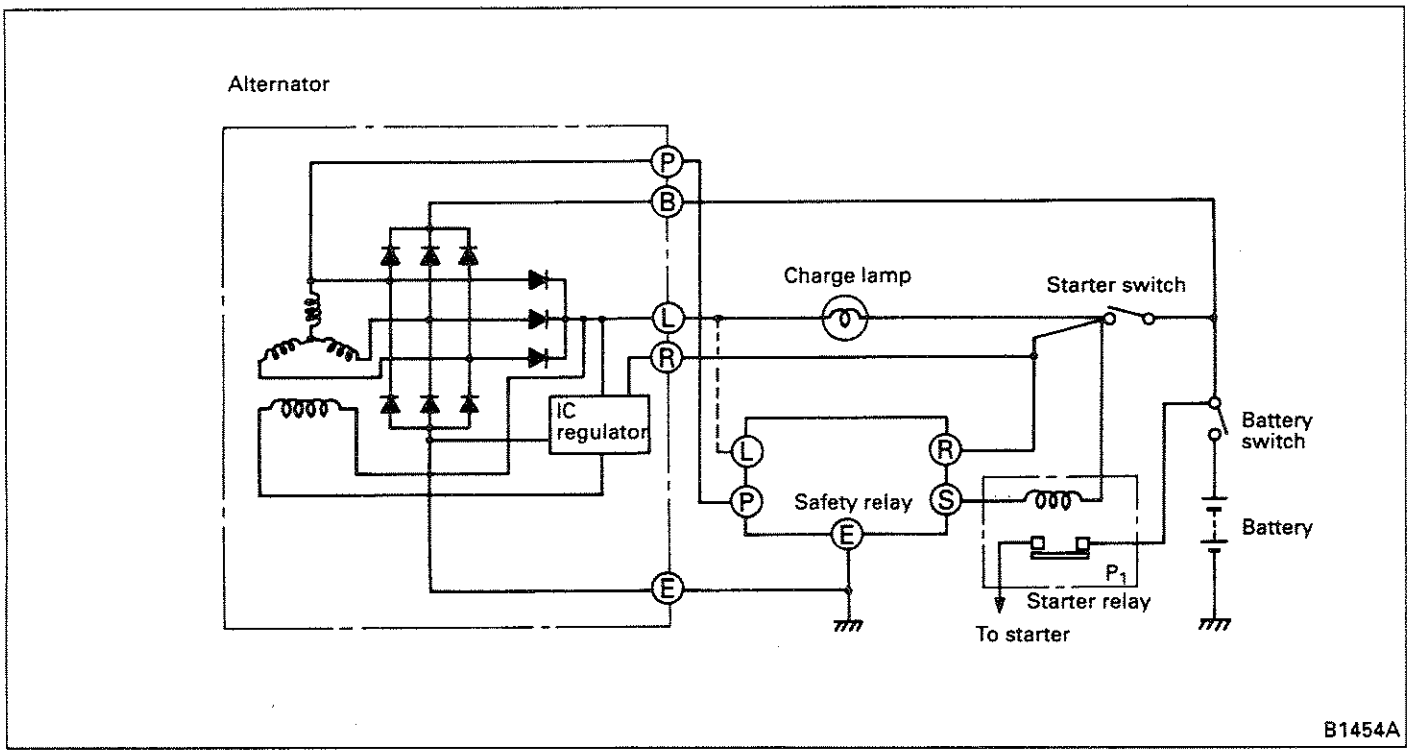

(1) When the starter switch is set to ON, current flow from the starter relay to terminal "S" and to terminal "E" of the safety relay, closing contact "P_1". The charge lamp also illuminates if provided.

(2) As the starter runs and the engine starts running, pulses of frequency 1/10 of the alternator speed appear at terminal "P" of the alternator. The charge lamp goes out.

(3) When the pulse frequency at terminal "P" exceeds the specified value, continuity between terminals "S" and "E" is lost. Then, the starter does not operate even if the starter switch is set to ON while the engine is running.

1.4 Regulator (Model R7T01071, R7T01072, RMS4227B, R8T10183)

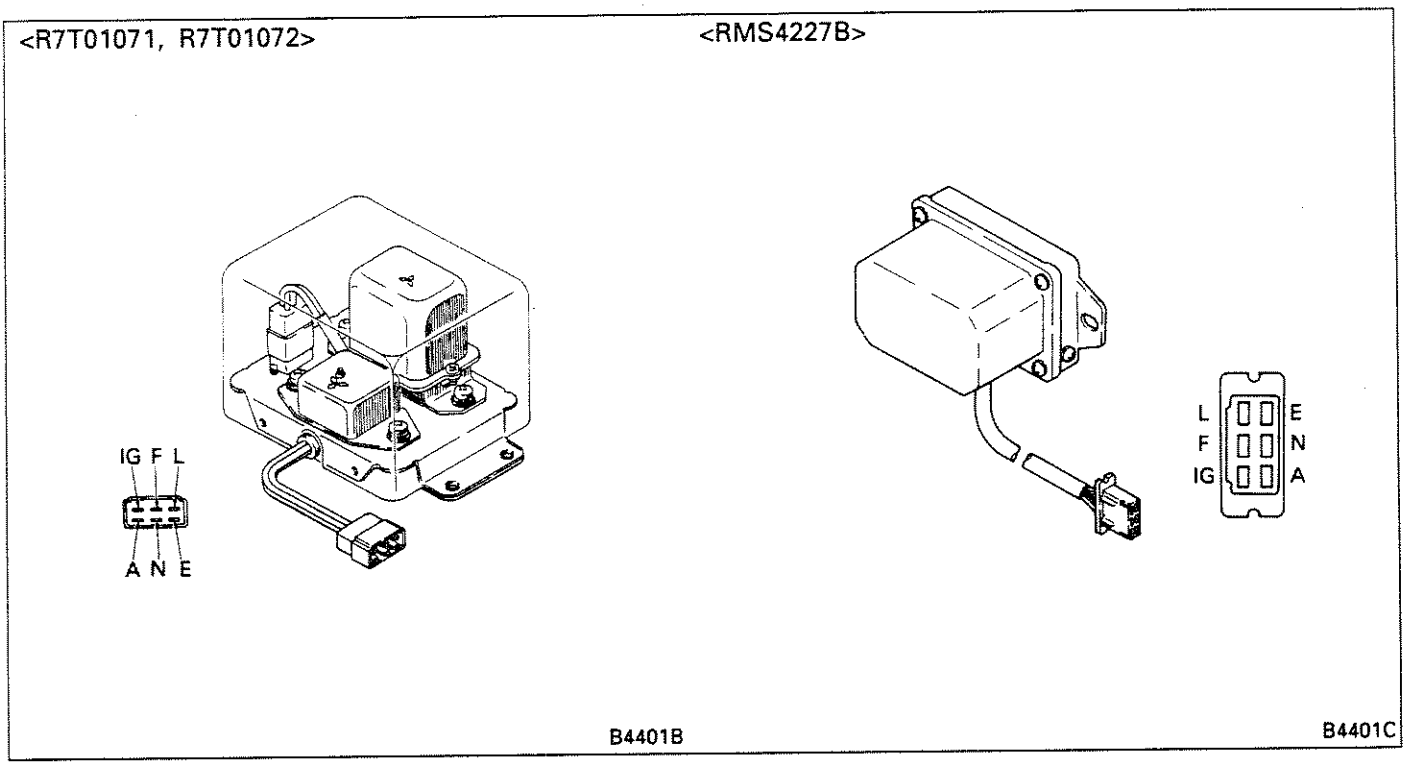

Its functions include:

(1) Voltage regulator

Maintains voltage generated by the generator constant.

(2) Safety relay

Keeps the starter circuit in OFF state even with the starter switch turned on during operation of engine.

<R8T10183>

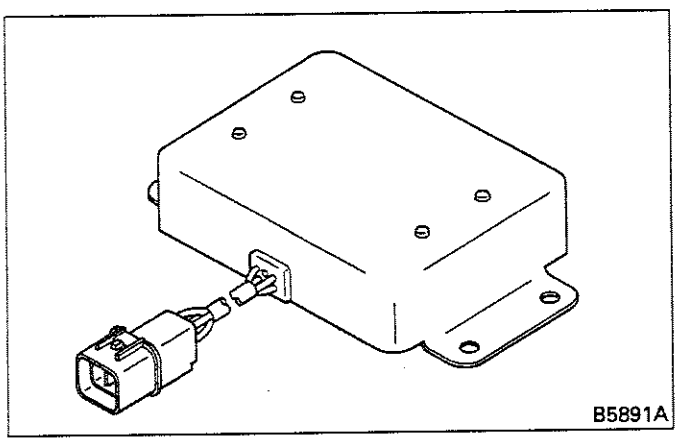

The regulator is an electronic unit. By varying the magnetic field generated by the field coil, the regulator keeps the alternator's output voltage constant. The output voltage would otherwise vary with changes in engine speed.

(3) Field relay

Minimizes discharge current to the alternator field coil even when the battery switch is left closed.

Connections of the alternator to the regulator are shown below.

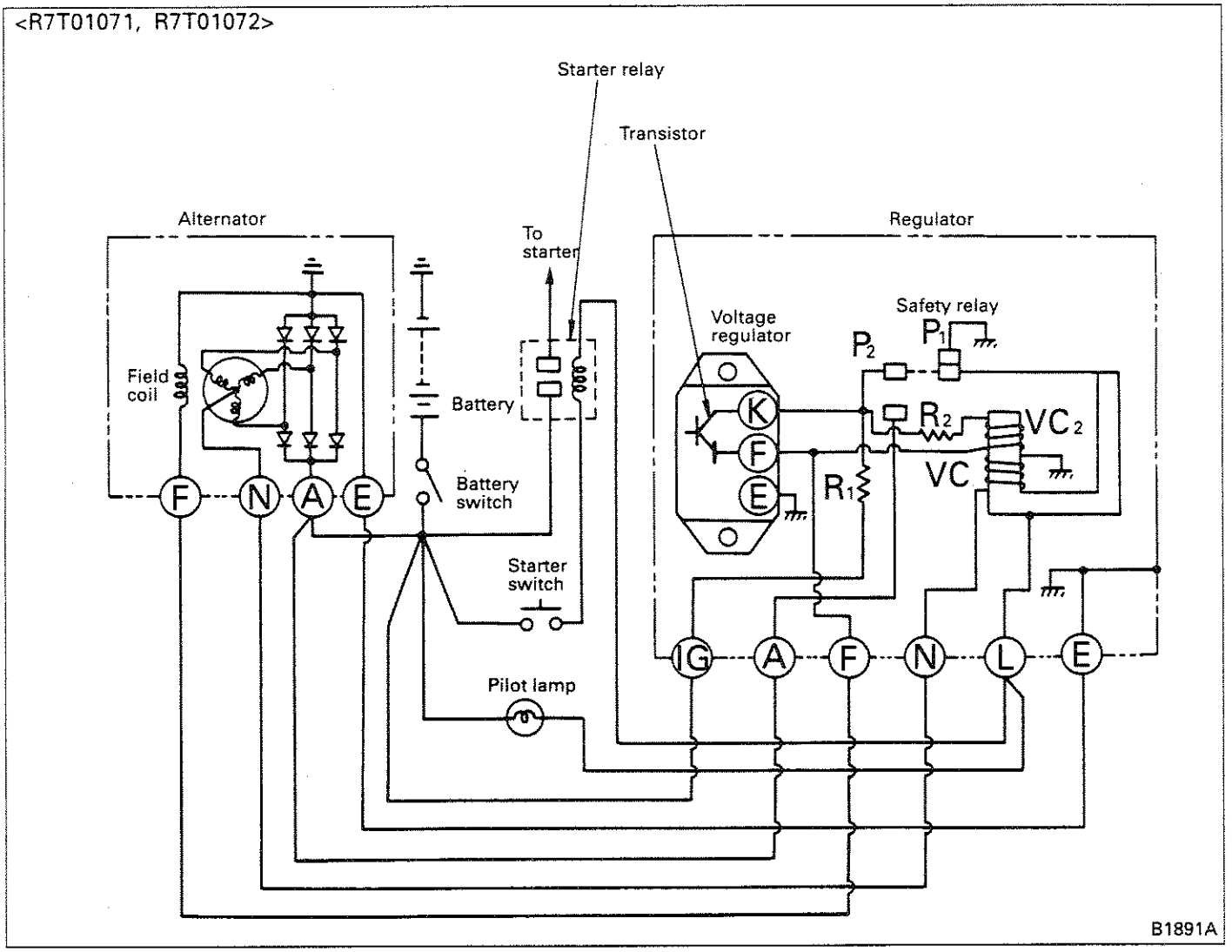

The battery switch in ON position causes field current to flow in the circuit as follows:

Battery → Battery switch → Regulator "IG" terminal → Resistor R_1 → Voltage regulator "K" terminal → Voltage regulator "F" terminal → Alternator "F" terminal → Field coil → Ground

When the starter switch is set to ON, the starter relay coil is energized with its contact closed. When the starter cranks the engine, the alternator generates power, causing a current to flow in the coil "VC_1" in the following sequence:

Alternator "N" terminal → Regulator "N" terminal → Coil VC_1 → Ground

As the coil "VC_1" is energized, the contact "P_1" is opened. In this state, setting the starter switch to ON with the engine in operation leaves the starter inoperative.

While the engine is in operation, field current flows in the following circuits, with alternator output voltage controlled by the voltage regulator.

Alternator "A" terminal → Regulator "A" terminal → Contact P_2 → Voltage regulator "K" terminal → Transistor → Regulator "F" terminal → Alternator "F" terminal → Field coil → Ground

If the transistor remains off too long, the alternator "N" terminal output is decreased and the coil "VC_1" loses its magnetic force to such an extent that the contact "P_2" may be opened or "P_1" closed. The circuit of coil "VC_2" and resistor "R_2" keeps "P_2" closed and "P_1" open in such a case.

<RMS4227B>

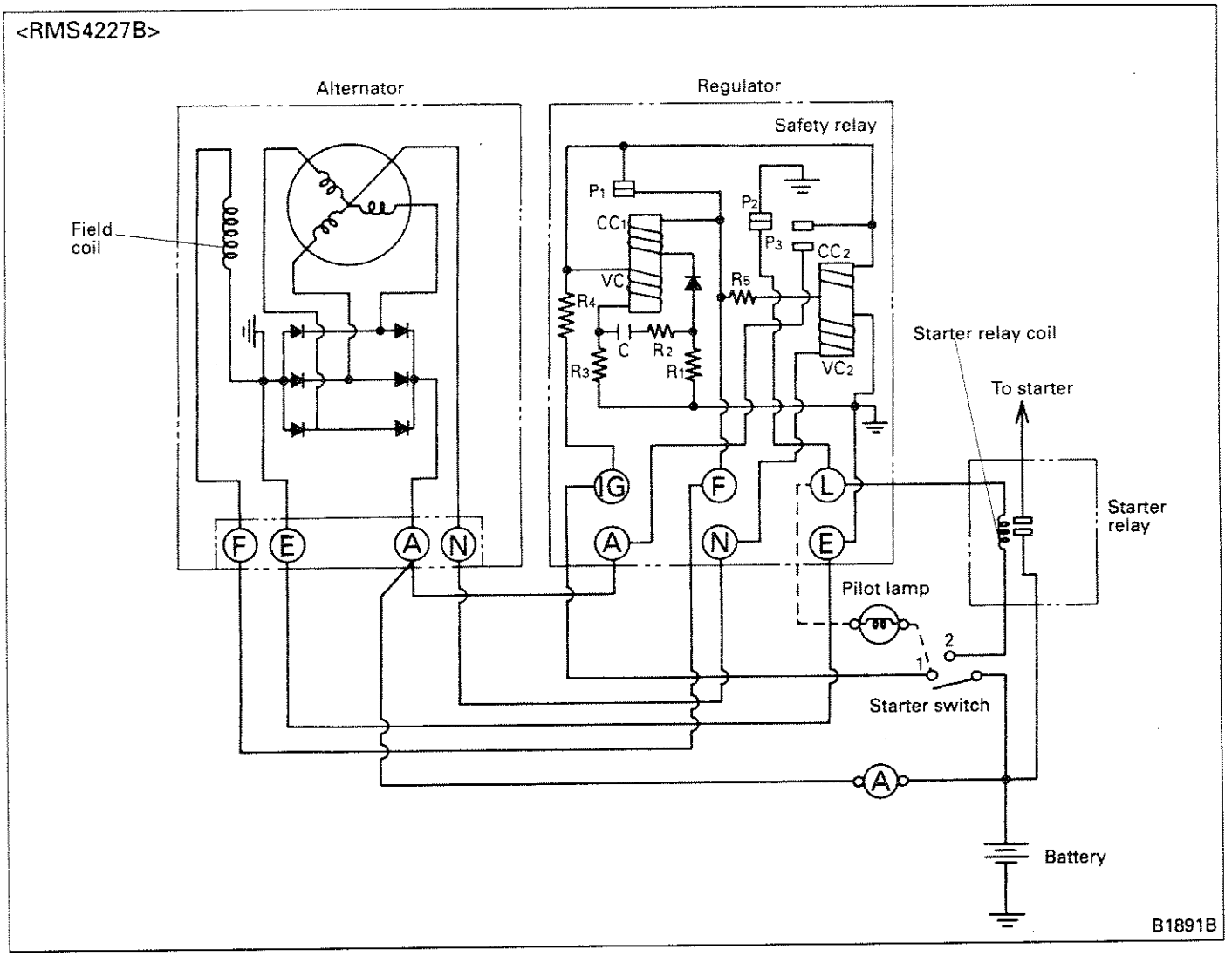

- When the starter switch is turned to the "1" position, field current flows as follows:
  Battery → Starter switch → Pilot lamp → Regulator L terminal → Contact P_2 → Ground
  → Regulator IG terminal → Resistor R_4 → Contact P_1 → Regulator F terminal →
  → Alternator field coil → Ground
- When the starter switch is turned to the "2" position, current flows as shown below, the starter turns, and the engine starts.
  Battery → Starter switch → Starter relay coil → Regulator L terminal → Contact P_2 → Ground
- When the engine starts and the starter switch is returned to the "1" position, the starter stops turning. At this time, the voltage at the alternator's N terminal is applied to coil VC_2, so contact P_2 is open. As a result, the starter cannot function if the starter switch is accidentally turned again.
- When the engine reaches a certain speed (driven by the starter), the voltage across coil VC_2 causes contact P_3 to close. The field current is thereafter supplied by the alternator itself.
- As the alternator's output voltage increases, the voltage applied to coil VC_1 rises concomitantly. When the coil VC_1 voltage reaches a specified level, contact P_1 opens, thus cutting off the field current and reducing the generated voltage. When the voltage drops, contact P_1 closes again, causing field current to flow and allowing the generated voltage to rise again. This mechanism maintains the alternator's output at a constant voltage.
- When the engine stops, the field current flows into resistor R_4. Since very little current can flow through this resistor, the battery is not significantly drained even if the user forgets to cut the starter switch.

The regulator incorporates the following auxiliary circuits:

(1) Capacitor C and resistor R_2

When contact P_1 opens, capacitor C and resistor R_2 increase the speed at which the circuit becomes open and minimize arcing across the contact points. When the contact closes, capacitor C and resistor R_2 increase the contact pressure and minimize contact resistance, thus lengthening the contact points' service life.

(2) Choke coil CC_1

This component minimizes ripple in the alternator's output.

(3) Choke coil CC_2 and resistor R_5

When contact P_1 opens, the voltage at terminal N momentarily drops. Choke coil CC_2 and resistor R_5 prevent contact P_3 from opening at this time.

<R8T10183>

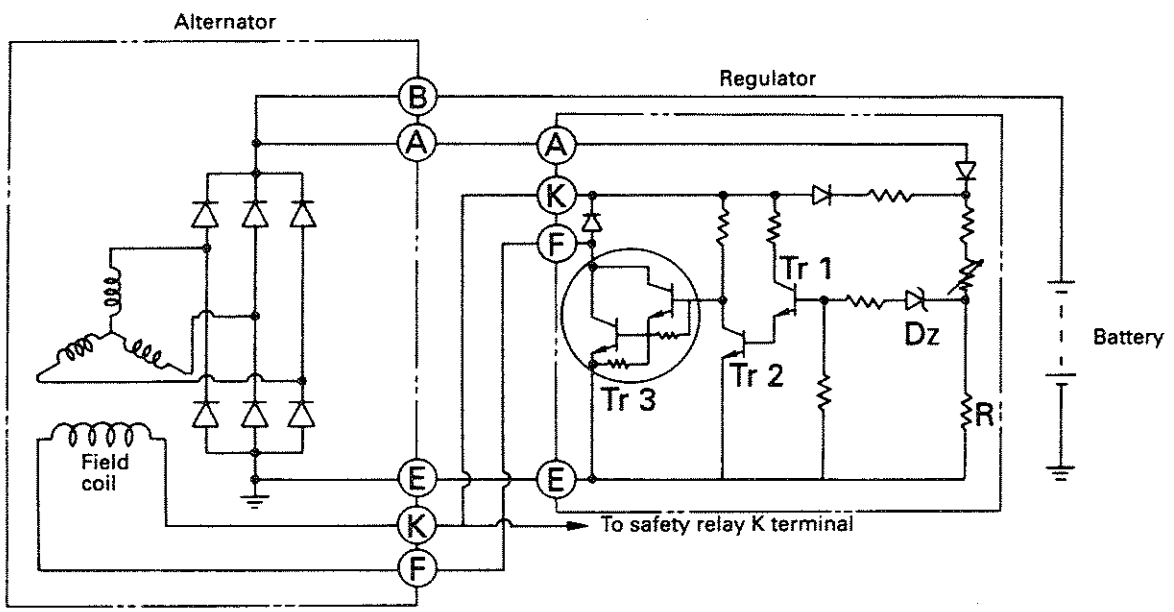

B5886A

- When the alternator's output voltage is low, the voltage between terminals A and E is concomitantly low. The voltage across resistor R thus becomes lower than the voltage of zener diode Dz, and no current flows through zener diode Dz. As a result, no current flows through transistors Tr 1 and Tr 2, and current starts flowing through power transistor Tr 3. Current thus flows into the field coil, and the alternator generates a higher output voltage.
- When the alternator's output voltage is high, the voltage between terminals A and E is concomitantly high. When the voltage between terminals A and E reaches a specified level, zener diode Dz allows current to pass. As a result, transistors Tr 1 and Tr 2 allow current to pass, and power transistor Tr 3 does not allow current to pass. Current is thus prevented from flowing into the field coil, and the alternator's output voltage decreases.
  The action of power transistor Tr 3 on the flow of field current thus controls the alternator's output voltage.

1.5 Intake Air Heater

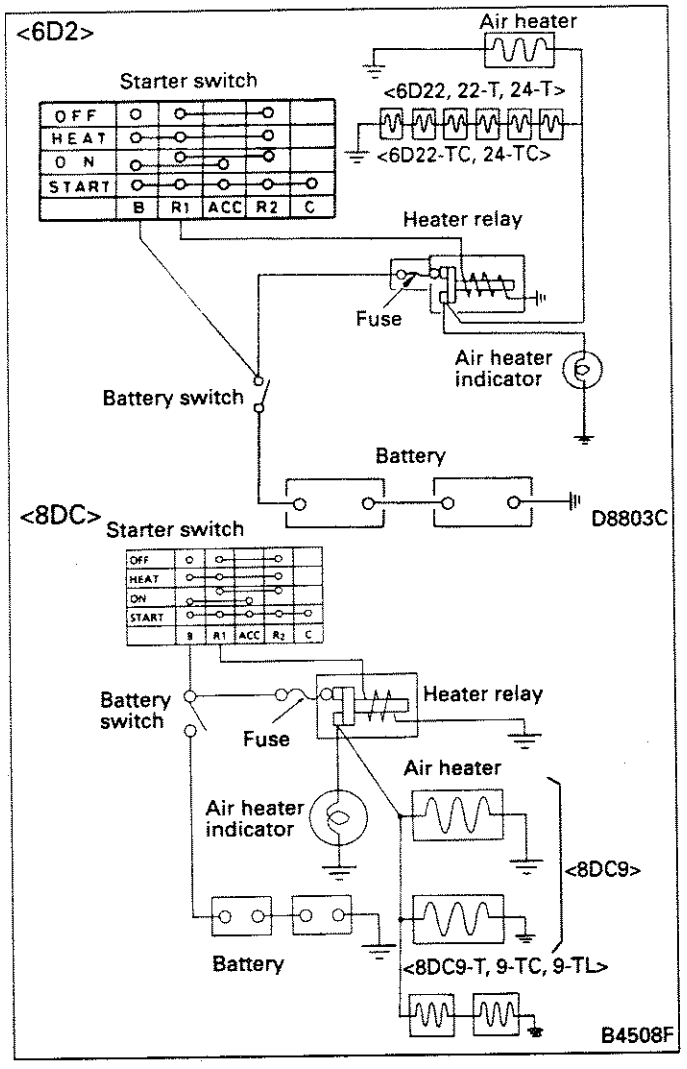

The intake air heater is an electric heater which heats the intake air to facilitate engine starting.
Place the starter switch to HEAT position to operate the heater. If current is supplied for about 40 to 60 seconds by keeping the starter switch at HEAT position, the temperature of the intake air heater will exceed 800°C.
The intake air heater circuit has an indicator to let the driver recognize the heat condition.

1.6 Automatic Stop System

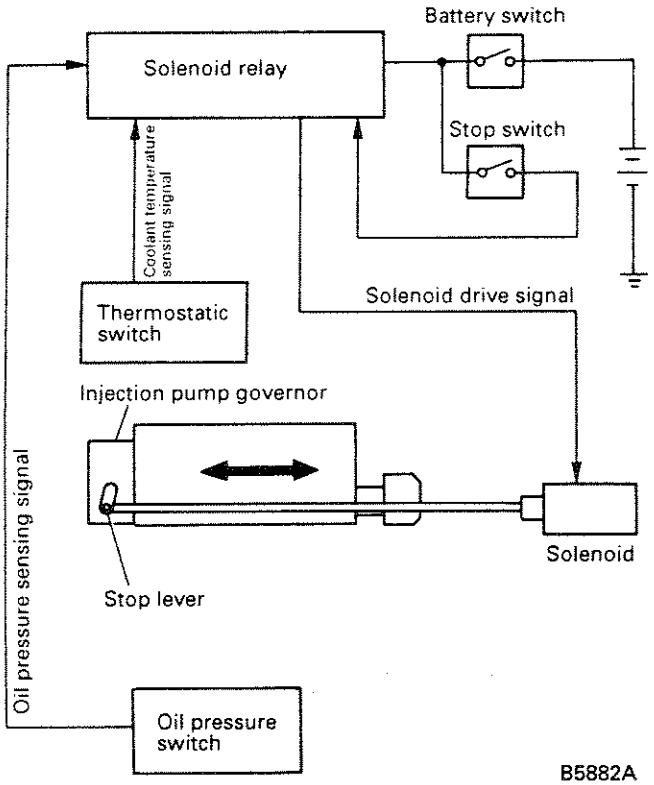

B5882A

Solenoid operation

<Shutdown type>

When the solenoid status changes from OFF to ON, the stop lever is pulled to the STOP side.

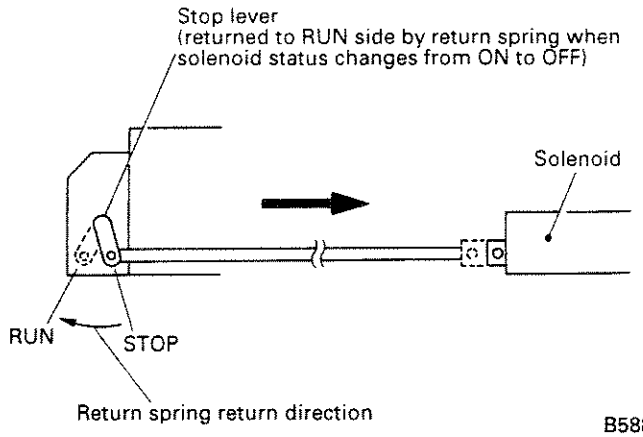

B5883A

<Run-on type>

When the solenoid status changes from ON to OFF, a stop lever pulls the stop lever back to the STOP side.

<6D2>

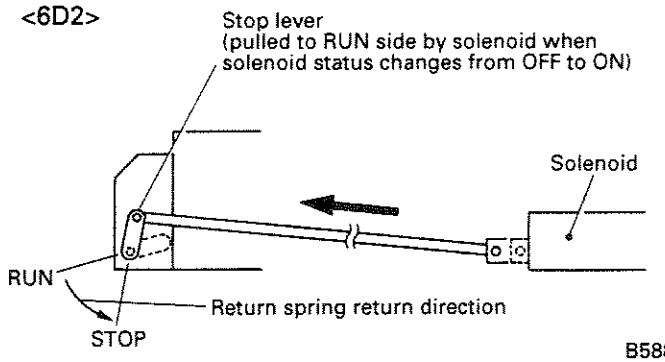

B5883B

<8DC>

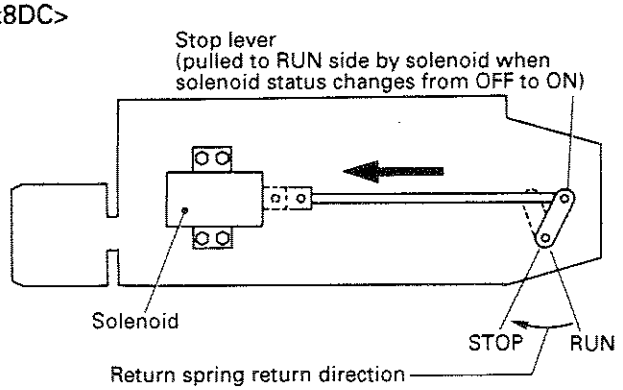

B5883C

The automatic stop system automatically stops the engine if the oil pressure drops to an abnormally low level or the coolant temperature reaches an abnormally high level. The system's key components include an oil pressure switch, a thermostatic switch, a solenoid relay, and a solenoid.
Any abnormal drop in oil pressure is sensed by the oil pressure switch, which then activates the solenoid. Similarly, any abnormal increase in coolant temperature is sensed by the thermostatic switch, which then activates the solenoid.
When actuated, the solenoid moves the injection pump governor's stop lever in the STOP direction and thereby stops the engine.
There are two types of automatic stop system: shutdown type and run-on type. The solenoid operation with each type is as illustrated.

1.6.1 Shutdown type

(1) Before engine is started

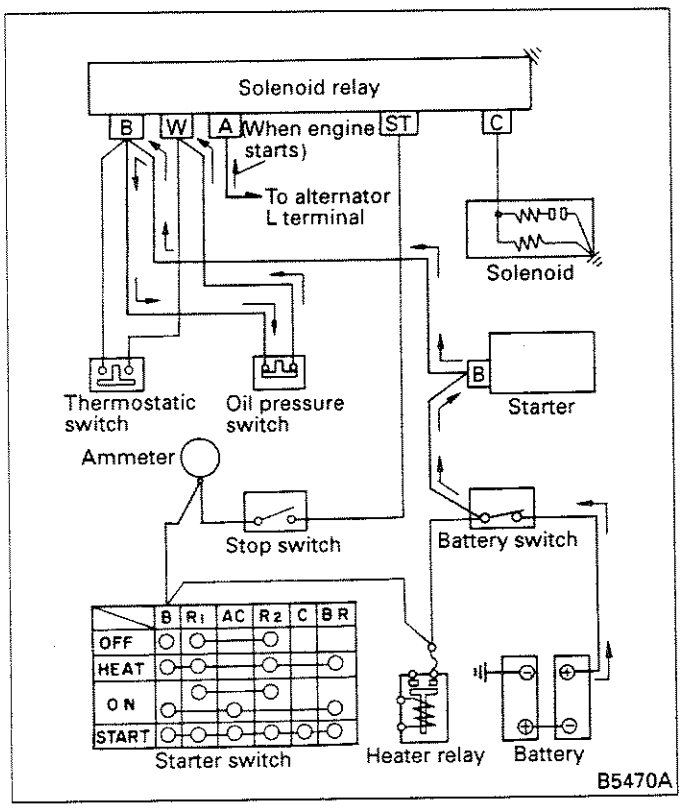

When the battery switch is turned ON, current flows as follows:

Battery
↓
Battery switch
↓
Starter B terminal
↓
Solenoid relay B terminal

At this time, the oil pressure switch contacts are closed since the engine has not been started. Current thus flows as follows:

Solenoid relay B terminal
↓
Oil pressure switch
↓
Solenoid relay W terminal
↓
Ground

Since there is no alternator voltage at the solenoid relay's A terminal, however, the solenoid relay is not actuated and does not supply current to the solenoid. With the solenoid not actuated, the governor's stop lever is positioned to allow the engine to be started.

(2) When engine is started

When the engine is started, alternator voltage is applied to the solenoid relay's A terminal. At this time, the oil pressure is still low, so the oil pressure switch contacts are closed, current is flowing to the solenoid relay's W terminal, and the solenoid relay is actuated. However, the capacitor inside the solenoid relay charges up using the voltage at terminal A, so current does not immediately flow to the solenoid relay's actuation circuit. Charging of the capacitor thus delays actuation of the solenoid relay. During this time delay, the engine's oil pressure increases and the oil pressure switch contacts open. This cuts the supply of current to the solenoid relay's W terminal, rendering the solenoid relay totally inactive.

(3) Automatic engine stop

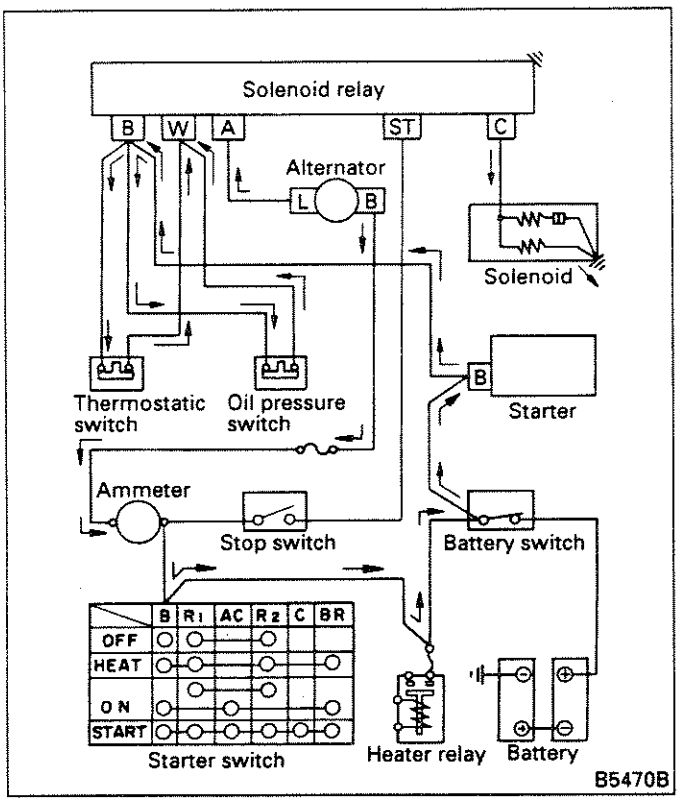

If the oil pressure drops abnormally or the coolant temperature increases abnormally while the engine is running, the output current from the alternator flows as shown below and the engine is stopped.

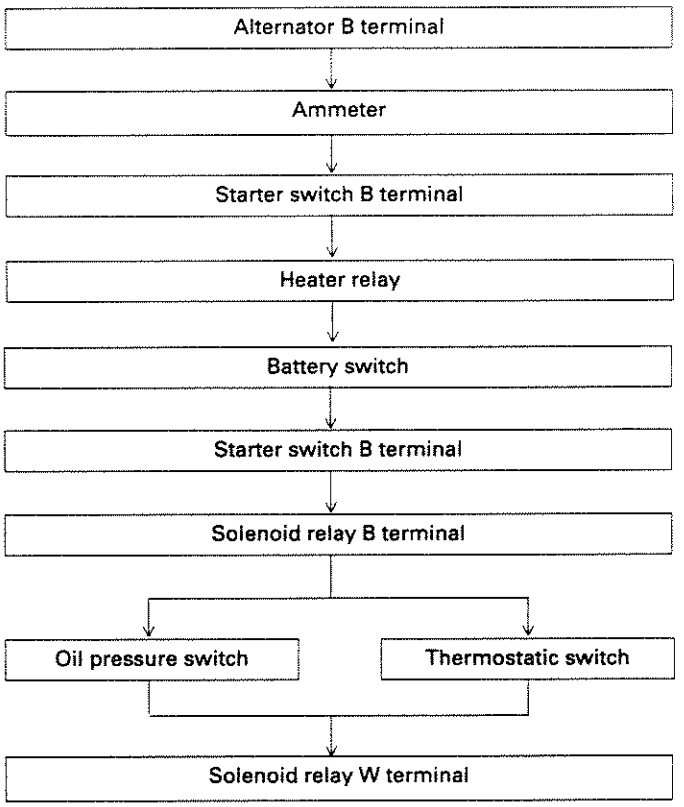

At this time, output voltage from the alternator is present at the solenoid relay's A terminal and current is flowing to the solenoid relay's internal circuit. The solenoid relay is thus actuated, causing further current to flow, as follows:

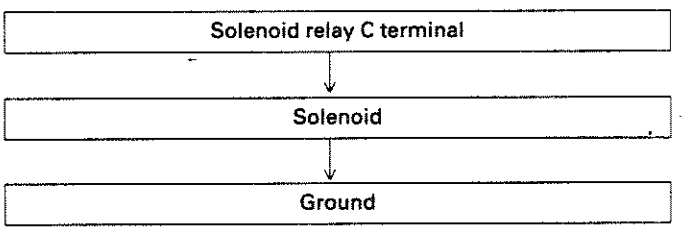

With the solenoid thus actuated, the injection pump governor's stop lever is pulled in the STOP direction. Until the engine stops completely, the solenoid is kept activated by current from the solenoid relay's internal capacitor.

(4) Manual engine stop

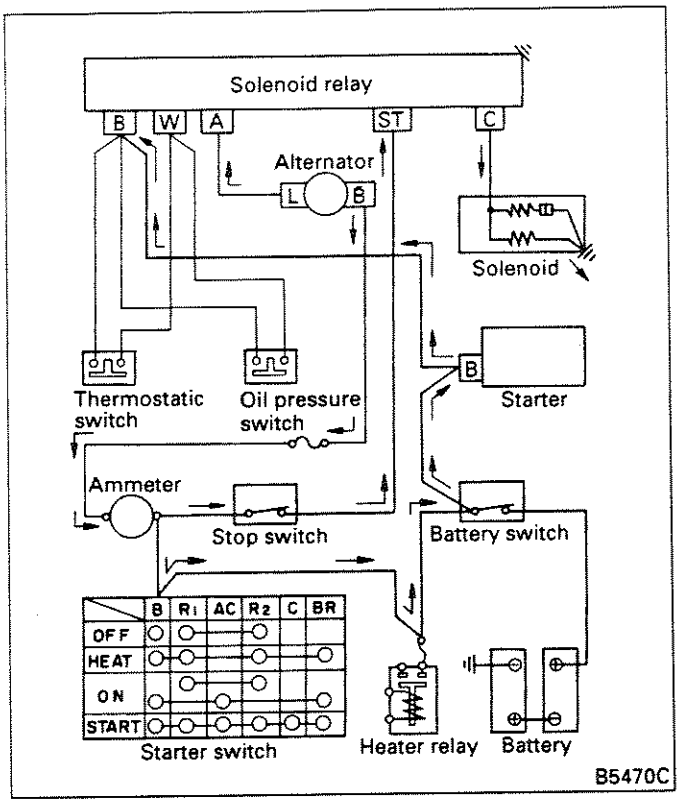

If the stop switch is turned ON while the engine is running, battery current flows as follows and the engine is stopped.

Alternator B terminal
↓
Ammeter
↓
Stop switch
↓
Solenoid relay ST terminal

When current flows to the solenoid relay's ST terminal, the solenoid relay is actuated and the engine is stopped in the way described in item (3).

1.6.2 Run-on type

(1) Before engine is started

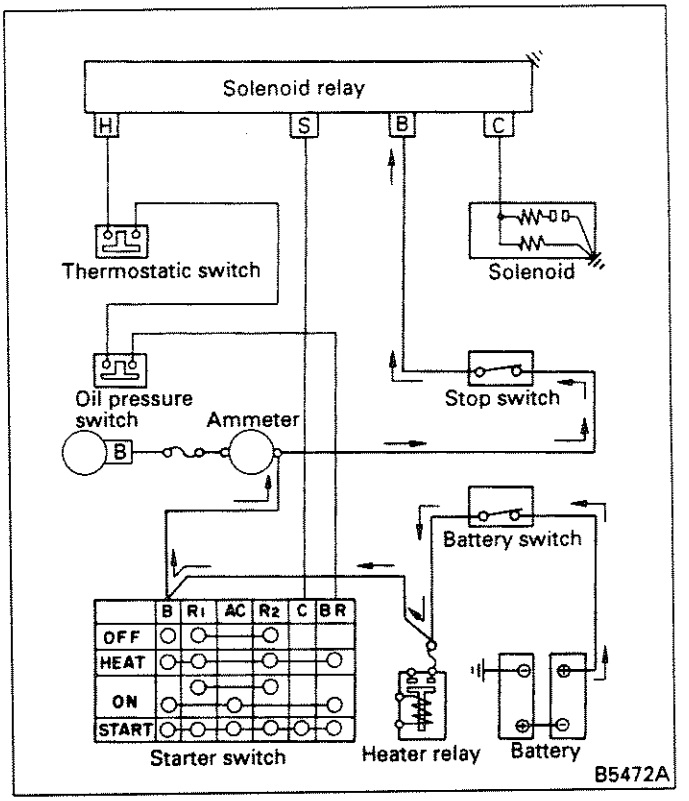

When the battery switch is turned ON, current flows as follows:

Battery
↓
Battery switch
↓
Heater relay
↓
Starter switch B terminal
↓
Ammeter
↓
*Stop switch
↓
Solenoid relay B terminal

(* : Contacts are open with stop switch ON and closed with stop switch OFF)

Although there is a voltage at the solenoid relay's B terminal, there is no input at any other terminal so the

solenoid relay does not actuate. The governor's stop lever is therefore in the STOP position.

(2) When engine is started

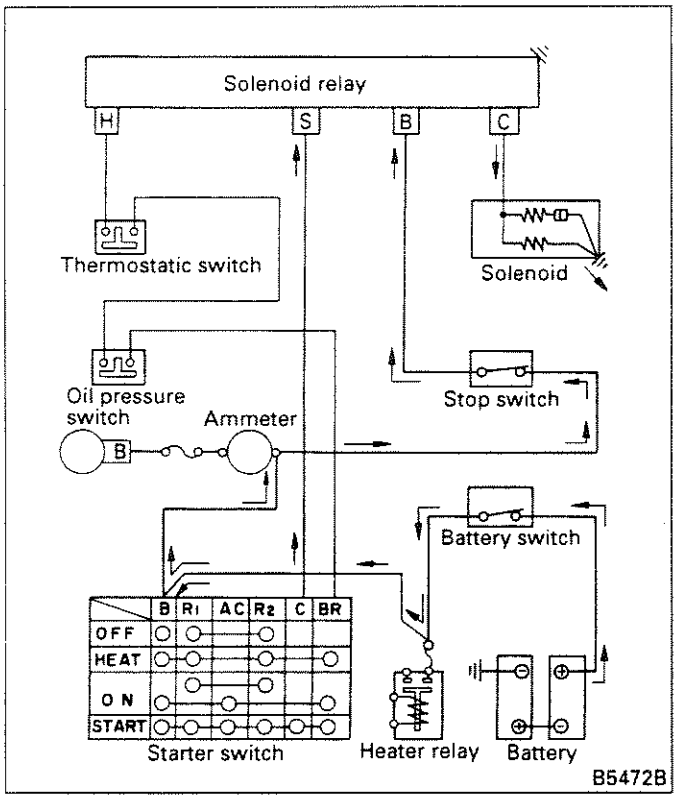

When the starter switch is turned to the START position, current flows as follows:

Battery
↓
Battery switch
↓
Heater relay
↓
Starter switch B terminal
↓
Starter switch C terminal
↓
Solenoid relay S terminal

When current flows to the solenoid relay's S terminal, the solenoid relay is actuated and further current flows, as follows:

Solenoid relay C terminal
↓
Solenoid
↓
Ground

The solenoid is thus actuated and positions the governor's stop lever such that the engine can be started. The engine then starts.

(3) If starter switch is turned ON after engine is started

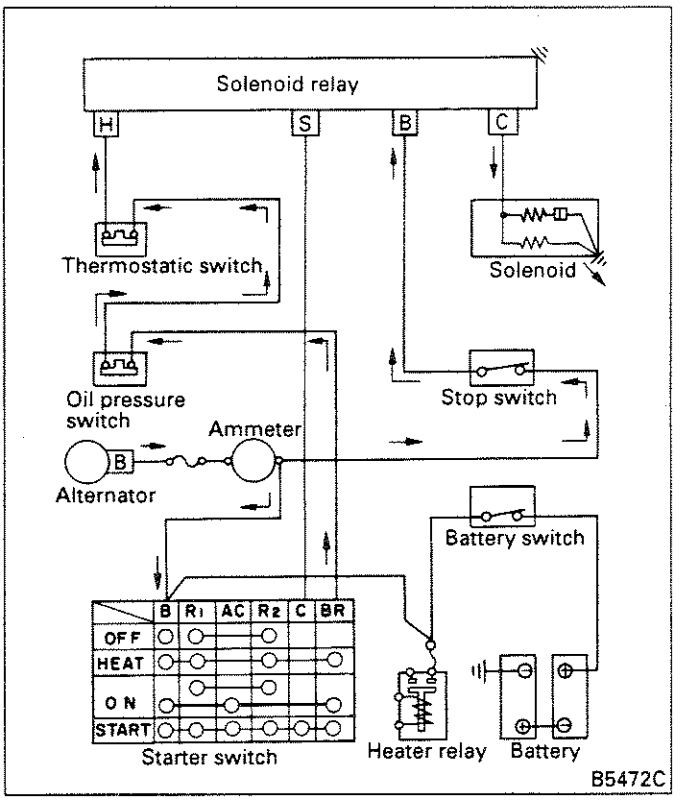

When the starter switch is turned to the ON position, the connection between the starter switch C terminal and the solenoid relay's S terminal is broken. However, the solenoid relay is kept actuated by its internal capacitor. During this period, the engine's oil pressure increases and the oil pressure switch contacts close. Current generated by the alternator flows as follows:

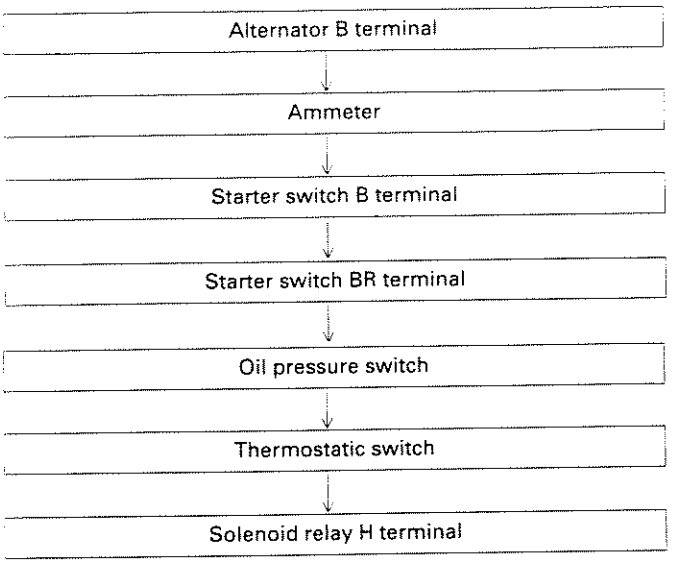

When current flows to the solenoid relay's H terminal, the solenoid relay actuates, thereby keeping the solenoid actuated.

(4) Automatic stop

If the oil pressure drops abnormally and/or the coolant temperature increases abnormally while the engine is running, the oil pressure switch and/or thermostatic switch contacts open, cutting the supply of current to the solenoid relay. The solenoid relay thus stops operating, causing the solenoid to also stop operating. When it stops operating, the solenoid moves the governor's stop lever in the STOP direction, thus stopping the engine.

(5) Manual engine stop

If the engine stop switch* is turned ON while the engine is running, the supply of current to the solenoid relay's B terminal is cut, thus stopping the solenoid relay from operating. The engine is thus stopped in the way described in item (4).
(* : Contacts are open with stop switch ON and closed with stop switch OFF)

2. SPECIFICATIONS

(1) Starter

6D2

Item		Specification				
Voltage – Polarity		24 V – ⊖ ground				
Starter (Manufacturer Mitsubishi Electric Corp.)	Type	Electromagnetic push-in type reduction starter				
	Model	M3T95082	M5T50275	M5T50276	M-00095-75	M5T50279
	Output	24 V – 5.5 kW	24 V – 6 kW			
	Reduction gears	Single reduction internal teeth spur gear				

8DC

Item		Specification					
Voltage – Polarity		24 V – ⊖ ground					
Starter (Manufacturer Mitsubishi Electric Corp.)	Type	Electromagnetic push-in type reduction starter					
	Model	M4T95082	M5T50076	M5T50085	M-00180-24	M5T55171	M5T55172
	Output	24 V – 6 kW			24 V – 7 kW		
	Reduction gears	Single reduction internal teeth spur gear					

(2) Starter relay

6D2

Item		Specification		
Starter relay (Manufacturer Mitsubishi Electric Corp.)	Model	U1T06072	U1T06074	U1T07076

8DC

Item		Specification	
Starter relay (Manufacturer Mitsubishi Electric Corp.)	Model	U1T06376	U1T06372

(3) Alternator

6D2

Item		Specification												
Alternator (Manufacturer Mitsubishi Electric Corp.)	Type	Alternator with built-in IC regulator												
		With brushes									Brushless			
	Model	A2T 73387	A2T 72987	A2T 72986	A3TN 5387	A4T 57987	A4T 57986	A6T 76087	A6T 75386	A6T 75387	A4T 40287	A4T 58987	A4T 70187	A4T 75687
	Output	24 V – 30 A			24 V – 35 A	24 V – 40 A		24 V – 80 A			24 V – 40 A		24 V – 90 A	

Item		Specification		
Alternator (Manufacturer Mitsubishi Electric Corp.)	Type	Y-connection alternator with silicon diode rectifier		
	Model	A4T65773	A4T86387	A4T86287
	Output	24 V – 60 A	24 V – 110 A	24 V – 150 A

8DC

Item		Specification									
Alternator (Manufacturer Mitsubishi Electric Corp.)	Type	Alternator with built-in IC regulator								Y-connection alternator with silicon diode rectifier	
		With brushes				Brushless					
	Model	A2T 72987	A4T 57471	A4T 57987	A6T 75387	A4T 58989	A4T 58289	A4T 66487	A4T 75589	A4T 85774	A4T 85777
	Output	24 V – 30 A	24 V – 40 A		24 V – 80 A	24 V – 40 A		24 V – 50 A	24 V – 90 A	24 V – 110 A	

(4) Safety relay

6D2

Item		Specification				
Safety relay	Model	R8T30171	R8T30172	R8T30174	R8T30274	0-25000-5341

8DC

Item		Specification	
Safety relay	Model	R8T30171	0-25000-5341

(5) Regulator

Item		Specification			
Regulator	Model	6D2			8DC
		R7T01071	R8T10183	RMS4227B	R7T01072

(6) Intake air heater

6D2

Item		Specification			
	Type	Electric heating type			
	Capacity x q'ty	0.3 kW x 6	0.476 kW x 6	2 kW x 1	2.86 kW x 1
Heater relay	Model	U1T06671	U1T06672	U1T06671	U1T06672
	Fuse capacity	91 A	127A	91 A	127 A

8DC

Item		Specification				
	Type	Electric heating type				
	Capacity x q'ty	1.4 kW x 2	1.43 kW x 1	1.45 kW x 1	1.9 kW x 2	1.8 kW x 2
Heater relay	Model	U1T06672	U1T06675		U1T06673	
	Fuse capacity	127A	200 A		164 A	

(7) Automatic stop system (option)

Item		Specification	
		For shutdown	For run-on
Stop solenoid (Nippon Denso Products)	Type	Electromagnetic	Electromagnetic <except 8DC9-T, 9-TC>
Stop solenoid (Kimura Yoko Products)	Type	–	Electromagnetic <8DC9-T, 9-TC>
Solenoid relay (Nikko Denki Produkts)	Type	0-25000-5592	0-25000-6720
Oil pressure switch		Diaphragm-type with built-in electric contacts	
Thermo switch		Wax-type with built-in electric contacts	

3. SERVICE STANDARDS

3.1 Service Standards Table

(1) Starter <6D2>

Unit: mm

Maintenance item		Nominal value (Basic diameter in [ ])	Limit	Remedy and remarks
M3T95082	Commutator O.D.	38.7	38.1	Replace
M5T50275, M5T50276, M5T50279, M-00095-75		43.2	42.6	
Commutator outside circumference runout		–	0.1	Correct or replaces
M3T95082, M5T50275, M5T50276, M5T50279, M-00095-75	Depth of groove between segment	–	0.2 or less	Correct or replaces
Brush spring pressure		25 to 34 N {2.5 to 3.5 kgf}	18 N {1.8 kgf}	Replace
M3T95082	Brush length	17	11	Replace
M5T50275, M5T50276, M5T50279, M-00095-75		23	14	
M3T95082, M5T50275, M5T50276, M5T50279, M-00095-75 (Voltage 23.5 V)	No-load characteristics	110 A or less 3300 rpm or more	–	Check
Magnetic switch operating voltage		16 V or less	–	Replace
M3T95082, M5T50279	Pinion gap	1 to 3	–	Adjust washers
M5T50275, M5T50276, M-00095-75		4 to 6	–	
Gear shaft thrust gap		0.1 to 0.5	–	Adjust washers

(2) Starter <8DC>

Unit: mm

Maintenance item		Nominal value (Basic diameter in { })	Limit	Remedy and remarks
M4T95082	Commutator O.D.	38.7	38.1	Replace
M5T50076, M5T50085, M5T55171, M5T55172, M-00180-24		43.2	42.6	
Commutator outside circumference runout		–	0.1	Correct or replaces
M4T95082, M5T50085, M5T55171, M5T55172, M5T50076, M-00180-24	Depth of groove between segment	–	0.2 or less	Correct or replaces
M4T95082	Brush spring pressure	33 to 45 N {3.4 to 4.6 kgf}	20 N {2 kgf}	Replace
M5T50076, M5T50085, M5T55171, M5T55172, M-00180-24		25 to 34 N {2.5 to 3.5 kgf}	18 N {1.8 kgf}	
M4T95082	Brush length	20	13	Replace
M5T50076, M5T50085, M5T55171, M5T55172, M-00180-24		23	14	
M4T95082, M5T50085, M5T50076, (Voltage 23.5 V)	No-load characteristics	110 A or less 3300 rpm or more	–	Check
M5T55171, M5T55172, M-00180-24, (Voltage 23.5 V)		110 A or less 3400 rpm or more		
Magnetic switch operating voltage		16 V or less	–	Replace
M4T95082, M5T50085, M5T55171, M5T55172, M-00180-24	Pinion gap	1 to 3	–	Adjust washers
M5T50076		4 to 6		
Gear shaft thrust gap		0.1 to 0.5	–	Adjust washers

(3) Alternator <6D2>

Unit: mm

Maintenance item			Nominal value (Basic diameter in [ ])	Limit	Remedy and remarks
Alternator 30 A (A2T72987 A2T72986 A2T73387)	Field coil resistance (at 20°C)		Approx. 8.7 Ω	–	Replace
	Slip ring O.D.		40.8 to 41.2	40.4	
	Brush spring tension		3.1 to 4.3 N {0.32 to 0.44 kgf}	2 N {0.2 kgf}	
	Brush length		23	8	
	Load characteristics (When cold)	1500 rpm, Terminal voltage 27V	17 A or more	–	Check
		2500 rpm, Terminal voltage 27V	26 A or more	–	
	IC regulator regulated voltage range (5000 rpm, 5 A or less)		28 to 29 V	–	Replace
Alternator 35 A (A3TN5387)	Field coil resistance (at 20°C)		9 to 10.4 Ω	–	Replace
	Slip ring O.D.		33	32.4	Replace
	Brush length		18.5	5	Replace
	Load characteristics (When hot)	1600 rpm, Terminal voltage 27V	20 A or more	–	Check
		2500 rpm, Terminal voltage 27V	29 A or more	–	
	IC regulator regulated voltage range (5000 rpm, 5 A or less)		28 to 29 V	–	Replace
Alternator 40 A (A4T57986 A4T57987)	Field coil resistance (at 20°C)		Approx. 8.7 Ω	–	Replace
	Slip ring O.D.		40.8 to 41.2	40.4	
	Brush spring tension		3.1 to 4.3 N {0.32 to 0.44 kgf}	2 N {0.2 kgf}	
	Brush length		23	8	
	Load characteristics (When cold)	1600 rpm, Terminal voltage 27V	26 A or more	–	Check
		2500 rpm, Terminal voltage 27V	37 A or more	–	
	IC regulator regulated voltage range (5000 rpm, 5 A or less)		28 to 29 V	–	Replace
Alternator 60 A (A4T65773)	Field coil resistance (at 20°C)		Approx. 13 Ω	–	Replace
	Slip ring O.D.		46	45.4	
	Brush spring tension		3.8 N {0.38 kgf}	2 N {0.2 kgf}	
	Brush length		23	8	
	Load characteristics (When cold)	2200 rpm, Terminal voltage 28V	60 A or more	–	Check

Maintenance item			Nominal value (Basic diameter in [ ])	Limit	Remedy and remarks
Alternator 80 A (A6T75386 A6T75387 A6T76087)	Field coil resistance (at 20°C)		Approx. 7.2 Ω	–	Replace
	Slip ring O.D.	A6T75386, A6T75387	40.8 to 41.2	40.4	
		A6T76087	41		
	Brush spring tension		3.1 to 4.3 N {0.32 to 0.44 kgf}	2 N {0.2 kgf}	
	Brush length		23	8	
	Load characteristics (When cold)	1500 rpm, Terminal voltage 27V	39 A or more	–	Check
		2500 rpm, Terminal voltage 27V	71 A or more	–	
	IC regulator regulated voltage range (5000 rpm, 5 A or less)		28 to 29 V	–	Replace
Alternator 40 A (brush-less) (A4T58987)	Field coil resistance (at 20°C)		Approx. 8 Ω	–	Replace
	Load characteristics (When cold)	1500 rpm, Terminal voltage 27V	26 A or more	–	Check
		2500 rpm, Terminal voltage 27V	37 A or more	–	
	IC regulator regulated voltage range (5000 rpm, 5 A or less)		28 to 29 V	–	Replace
Alternator 40 A (brush-less) (A4T40287)	Field coil resistance (at 20°C)		Approx. 6.2 Ω	–	Replace
	Load characteristics (When cold)	1500 rpm, Terminal voltage 27V	30 A or more	–	Check
		2500 rpm, Terminal voltage 27V	41 A or more	–	
	IC regulator regulated voltage range (5000 rpm, 5 A or less)		28 to 29 V	–	Replace
Alternator 90 A (brush-less) (A4T70187 A4T75687)	Field coil resistance (at 20°C)	A4T70187	Approx. 7 Ω	–	Replace
		A4T75687	Approx. 8.2 Ω	–	
	Load characteristics (When cold)	1500 rpm, Terminal voltage 27V	53 A or more	–	Check
		2500 rpm, Terminal voltage 27V	82 A or more	–	
	IC regulator regulated voltage range (5000 rpm, 5 A or less)		28 to 29 V	–	Replace
Alternator 110 A (A4T86387)	Field coil resistance (at 20°C)		9.6 to 11.6 Ω	–	Replace
	Slip ring O.D.		41	40.4	
	Brush spring tension		3.1 to 4.3 N {0.32 to 0.44 kgf}	2 N {0.2 kgf}	
	Brush length		23	8	
	Load characteristics (When cold)	2500 rpm, Terminal voltage 28V	100 A or more	–	Check

Maintenance item			Nominal value (Basic diameter in [ ])	Limit	Remedy and remarks
Alternator 150 A (A4T86287)	Field coil resistance (at 20°C)		3.0 to 3.7 Ω	–	Replace
	Slip ring O.D.		46	45.4	
	Brush spring tension		3.1 to 4.3 N {0.32 to 0.44 kgf}	2 N {0.2 kgf}	
	Brush length		23	8	
	Load characteristics (When cold)	2500 rpm, Terminal voltage 28V	140 A or more	–	Check

(4) Alternator <8DC>

Unit: mm

Maintenance item			Nominal value (Basic diameter in [ ])	Limit	Remedy and remarks
Alternator 30 A (A2T72987)	Field coil resistance (at 20°C)		Approx. 8.7 Ω	–	Replace
	Slip ring O.D.		40.8 to 41.2	40.4	
	Brush spring tension		3.1 to 4.3 N {0.32 to 0.44 kgf}	2 N {0.2 kgf}	
	Brush length		23	8	
	Load characteristics (When cold)	1500 rpm, Terminal voltage 27V	17 A or more	–	Check
		2500 rpm, Terminal voltage 27V	26 A or more	–	
	IC regulator regulated voltage range (5000 rpm, 5 A or less)		28 to 29 V	–	Replace
Alternator 40 A (A4T57987)	Field coil resistance (at 20°C)		About 8.7 Ω	–	Replace
	Slip ring O.D.		40.8 to 41.2	40.4	Replace
	Brush spring tension		3.1 N to 4.3 N {0.32 to 0.44 kgf}	2 N {0.2 kgf}	Replace
	Brush length		23	8	
	Load characteristics (When cold)	1600 rpm, Terminal voltage 27V	26 A or more	–	Check
		2500 rpm, Terminal voltage 27V	37 A or more	–	
	IC regulator regulated voltage range (5000 rpm, 5 A or less)		28 to 29 V	–	Replace
Alternator 40 A (A4T57471)	Field coil resistance (at 20°C)		10 Ω	–	Replace
	Slip ring O.D.		40.8 to 41.2	40.4	
	Brush spring tension		3.1 to 4.3 N {0.32 to 0.44 kgf}	2 N {0.2 kgf}	
	Brush length		23	8	
	Load characteristics (When cold)	1500 rpm, Terminal voltage 27V	26 A or more	–	Check
		2500 rpm, Terminal voltage 27V	37 A or more	–	
	IC regulator regulated voltage range (5000 rpm, 5 A or less)		28 to 29 V	–	Replace

Maintenance item			Nominal value (Basic diameter in [ ])	Limit	Remedy and remarks
Alternator 40 A (brush-less) (A4T58289, A4T58989)	Field coil resistance (at 20°C)		Approx. 8 Ω	–	Replace
	Load characteristics (When cold)	1500 rpm, Terminal voltage 27V	26 A or more	–	Check
		2500 rpm, Terminal voltage 27V	37 A or more	–	
	IC regulator regulated voltage range (5000 rpm, 5 A or less)		28 to 29 V	–	Replace
Alternator 50 A (brush-less) (A4T66487)	Field coil resistance (at 20°C)		Approx. 8 Ω	–	Replace
	Load characteristics (When cold)	1500 rpm, Terminal voltage 27V	26 A or more	–	Check
		2500 rpm, Terminal voltage 27V	46 A or more	–	
	IC regulator regulated voltage range (5000 rpm, 5 A or less)		28 to 29 V	–	Replace
Alternator 80 A (A6T75387)	Field coil resistance (at 20°C)		Approx. 7.2 Ω	–	Replace
	Slip ring O.D.		40.8 to 41.2	40.4	
	Brush spring tension		3.1 to 4.3 N {0.32 to 0.44 kgf}	2 N {0.2 kgf}	
	Brush length		23	8	
	Load characteristics (When cold)	1500 rpm, Terminal voltage 27V	39 A or more	–	Check
		2500 rpm, Terminal voltage 27V	71 A or more	–	
	IC regulator regulated voltage range (5000 rpm, 5 A or less)		28 to 29 V	–	Replace
Alternator 90 A (brush-less) (A4T75589A)	Field coil resistance (at 20°C)		7 Ω	–	Replace
	Load characteristics (When cold)	1500 rpm, Terminal voltage 27V	53 A or more	–	
		2500 rpm, Terminal voltage 27V	82 A or more	–	
	IC regulator regulated voltage range (5000 rpm, 5 A or less)		28 to 29 V	–	
Alternator 110 A (A4T85774, A4T85777)	Field coil resistance (at 20°C)		9.6 to 11.6 Ω	–	Replace
	Slip ring O.D.		46	45.4	
	Brush spring tension		3.1 to 4.3 N {0.32 to 0.44 kgf}	2 N {0.2 kgf}	
	Brush length		23	8	
	Load characteristics (When cold)	2500 rpm, Terminal voltage 28V	100 A or more	–	Check

(5) Regulator

Unit: mm

Maintenance item		Nominal value (Basic diameter in [ ])	Limit	Remedy and remarks
Voltage regulator regulated voltage (at 4,000 rpm) <R7T01071, R7T01072>		28 to 29 V	–	Replace
Voltage regulator regulated voltage (at 3,000 rpm)	R8T10183	28 to 29 V	–	Replace
	RMS4227B	28 to 30 V	–	

(6) Safety relay

Unit: mm

Maintenance item	Nominal value (Basic diameter in [ ])	Limit	Remedy and remarks
Resistance between "L" and "R" terminals	Approx. 200 Ω	–	Replace

(7) Intake air heater

Unit: mm

Maintenance item	Nominal value (Basic diameter in [ ])	Limit	Remedy and remarks
Time required for indicator to become red-hot	40 to 60 sec.	–	Check

(8) Automatic stop system

(a) Shutdown type <6D2>

Unit: mm

Maintenance item		Nominal value (Basic diameter in [ ])	Limit	Remedy and remarks
Solenoid	Pointer gap	1.5 to 2.0	–	Replace
	Stop lever to external stopper clearance	1.2 ± 0.2	–	
	Holding coil current	5A or less	–	
Solenoid relay	Delay time at starting (after 28.5 V applied to terminals "B" and "W" and 28.5 V to terminal "A")	13 to 23 sec.	–	Replace
	Delay time at stopping (after 24 V applied to terminals "B" and "W" and no voltage to terminal "A")	25 to 35 sec.	–	
Thermo switch actuating temperature		93 to 97°C	–	Replace
Oil pressure switch actuating pressure		69 to 98 KPa {0.7 to 1.0 kgf/cm^2} or less	–	Replace
Oil pressure switch relay (24 V)	Coil resistance	190 to 280 Ω	–	Replace
	Min. operating voltage	16 V or less	–	

(b) Run-on type

Unit: mm

Maintenance item			Nominal value (Basic diameter in [ ])	Limit	Remedy and remarks
Solenoid	Pointer gap <8DC9, 9-T, 9-TL>		0.8 to 1.2	–	Replace
	Stop lever to external stopper clearance		0.7 ± 0.2	–	
	Holding coil current		1A or less	–	
Solenoid relay delay time			26 to 34 sec.	–	Replace
Thermo switch	Actuating temperature	Tap water cooling type	93 to 97°C	–	Replace
		Radiator cooling type	99 to 103°C	–	
	ON-OFF difference		Within 7°C	–	Replace
Oil pressure switch actuating pressure			79 to 115 KPa {0.8 to 1.2 kgf/cm^2} or less	–	Replace

3.2 Tightening Torque Table

Location tightened	Screw size O.D. x pitch (mm)	Tightening torque N·m {kgf·m}	Remark
Alternator pulley tightening nut	M17 x 1.5	83 to 105 {8.5 to 11}	–
	M20 x 1.5	130 to 160 {13.5 to 16.5}	–
Alternator shaft nut	–	345 to 360 {35 to 37}	–

4. SPECIAL TOOL

Unit: mm

Tool name	Shape
Socket 31191-06100 Removal and installation of starter	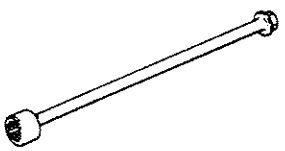 Width across flats 17 B5021A

5. SERVICE PROCEDURE

NOTE:
Whenever removing electrical parts from the vehicle, be sure to place the starter switch in OFF position, disconnect the negative battery cable, and wind the cable end with vinyl insulation tape.

5.1 Starter

5.1.1 Removal and installation

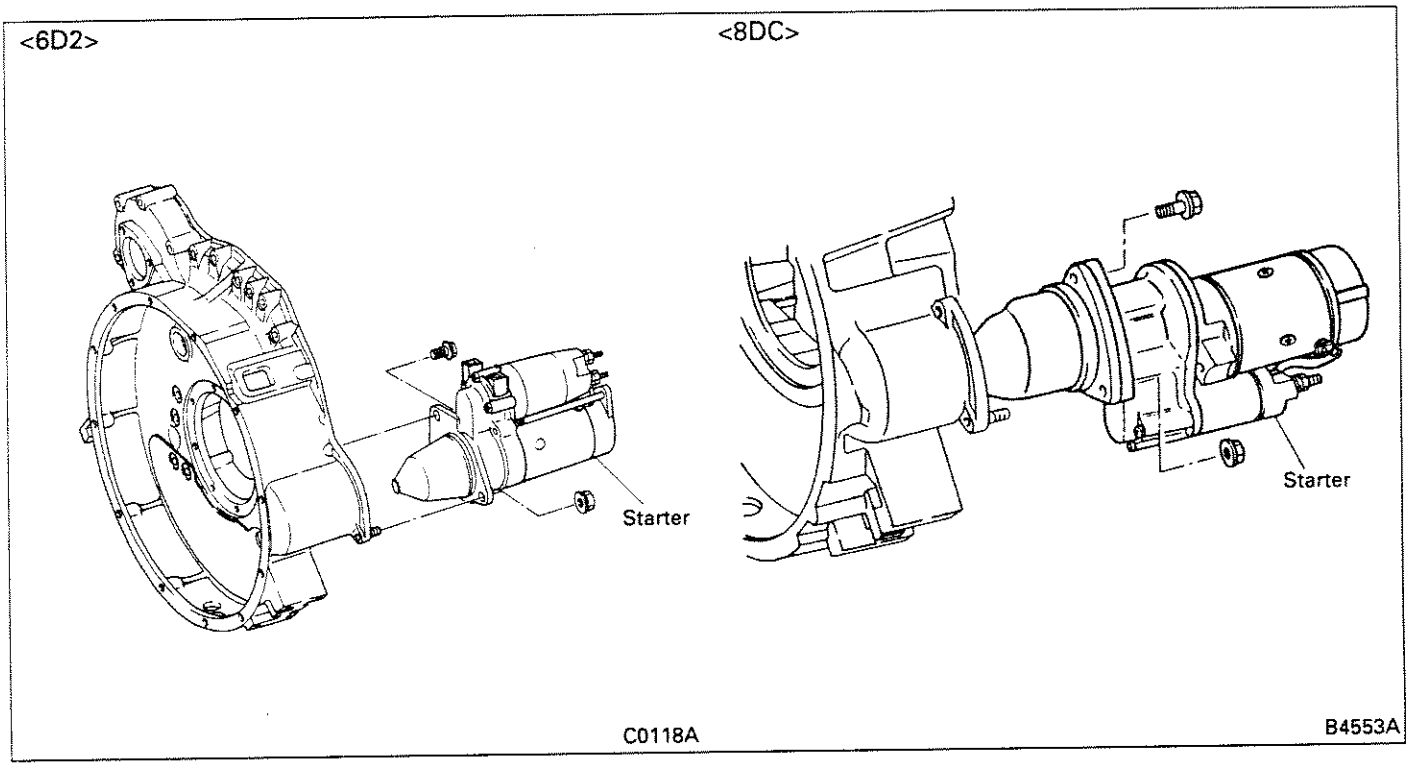

To remove the starter mounting nut inside (on the crankcase end), use Socket (special tool: 31191-06100).

5.1.2 Disassembly

<6D2 : M3T95082>

NV .. Nominal Value

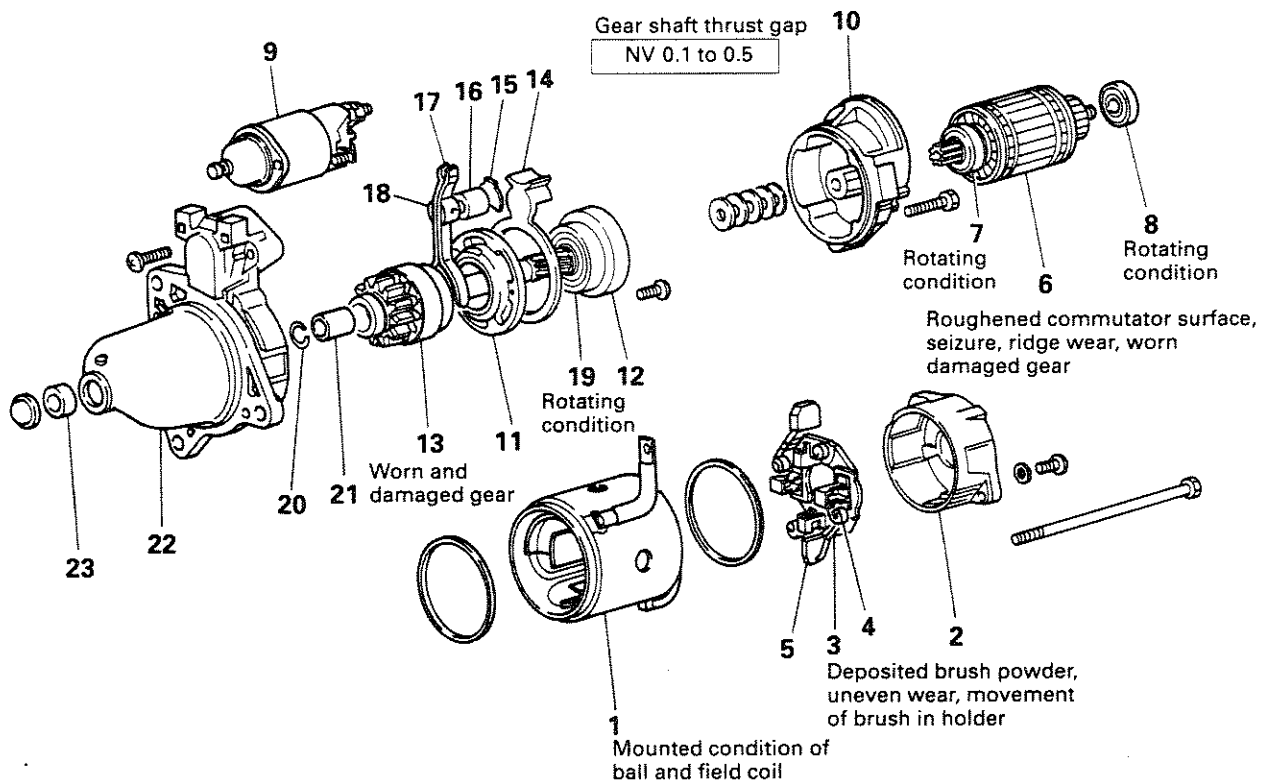

Disassembly sequence

① Yoke assembly
2 Rear bracket
3 Brush holder
④ Brush spring
⑤ Brush
6 Armature
*7 Front bearing
*8 Rear bearing
⑨ Magnetic switch
10 Center bracket
⑪ Gear bracket
⑫ Gear shaft
⑬ Overrunning clutch
14 Packing
15 Plate
16 Spacer
17 Lever
18 Collar
*19 Gear shaft bearing
⑳ Ring
㉑ Pinion stopper
22 Front bracket
*23 Sleeve bearing

Parts marked with * should not be removed unless defects are evident.
For parts with an encircled number, refer to Disassembly Procedure that follows.

<6D2 : M5T50275, M5T50276, M5T50279, M-00095-75>
<8DC : M5T50076, M-00180-24>

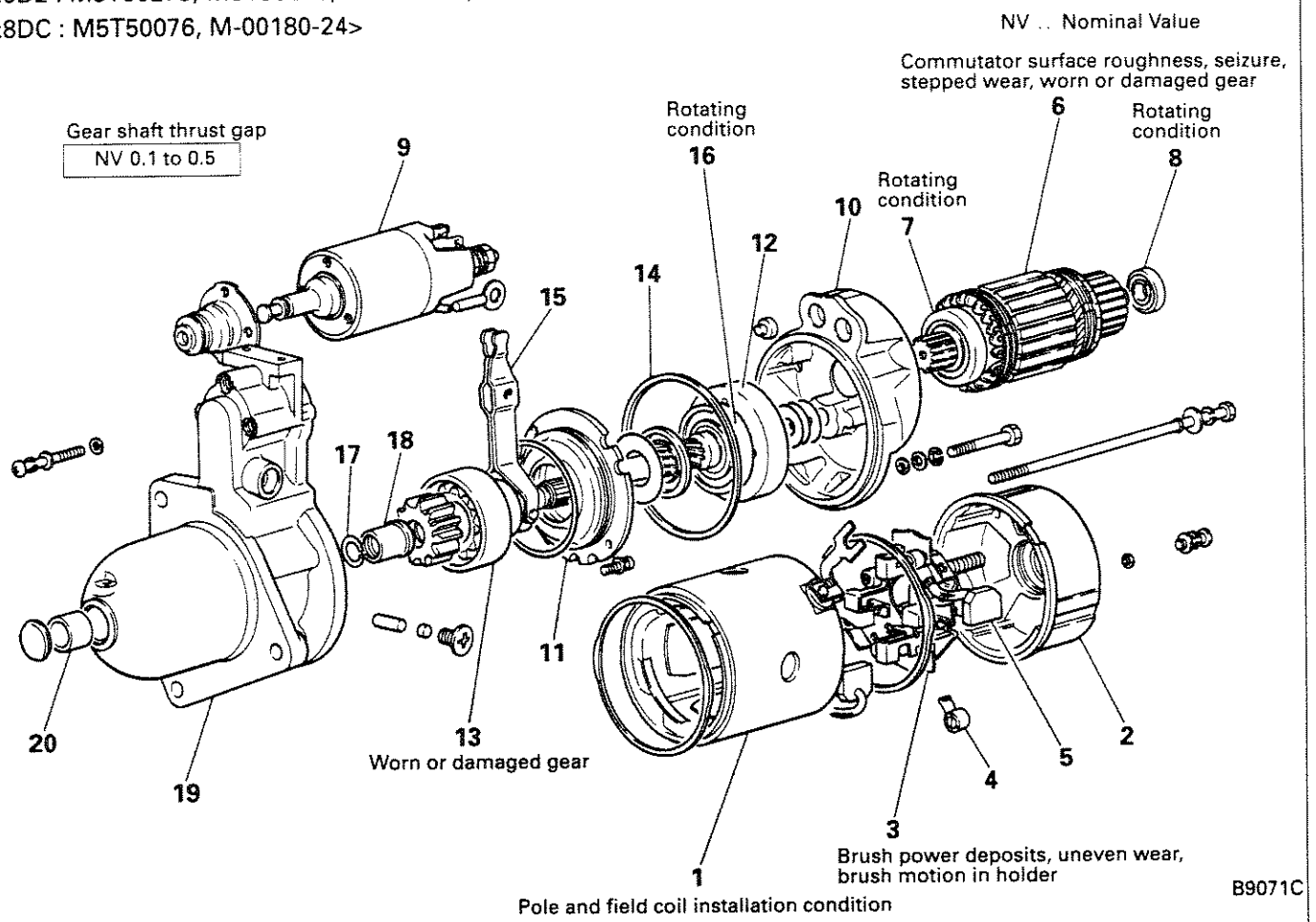

Disassembly sequence

① Yoke assembly
2 Rear bracket
3 Brush holder
④ Brush spring
⑤ Brush
6 Armature
*7 Front bearing
*8 Rear bearing
⑨ Magnetic switch
10 Center bracket
⑪ Gear bracket
⑫ Gear shaft
⑬ Overrunning clutch
14 Packing
15 Lever
*16 Gear shaft bearing
⑰ Ring
⑱ Pinion stopper
19 Front bracket
*20 Sleeve bearing

Parts marked with * should not be removed unless defects are evident.
For parts with an encircled number, refer to Disassembly Procedure that follows.

<8DC : M5T50085>

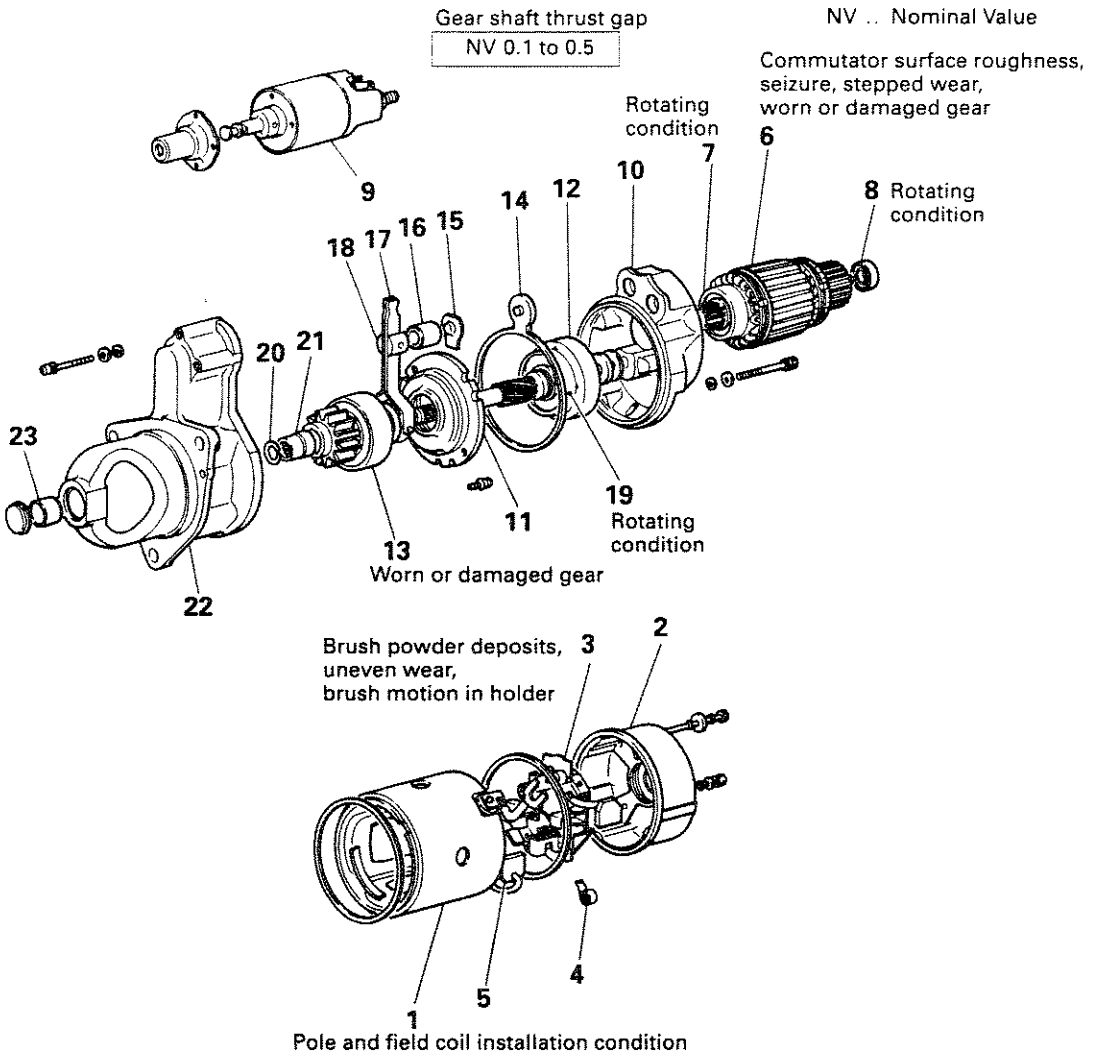

Disassembly sequence

① Yoke assembly
2 Rear bracket
3 Brush holder
④ Brush spring
⑤ Brush
6 Armature
*7 Front bearing
*8 Rear bearing
⑨ Magnetic switch
10 Center bracket
⑪ Gear bracket
⑫ Gear shaft
⑬ Overrunning clutch
14 Packing
15 Plate
16 Spacer
17 Lever
18 Collar
*19 Gear shaft bearing
⑳ Ring
㉑ Pinion stopper
22 Front bracket
*23 Sleeve bearing

Parts marked with * should not be removed unless defects are evident.
For parts with an encircled number, refer to Disassembly Procedure that follows.

D7564B

<8DC : M4T95082>

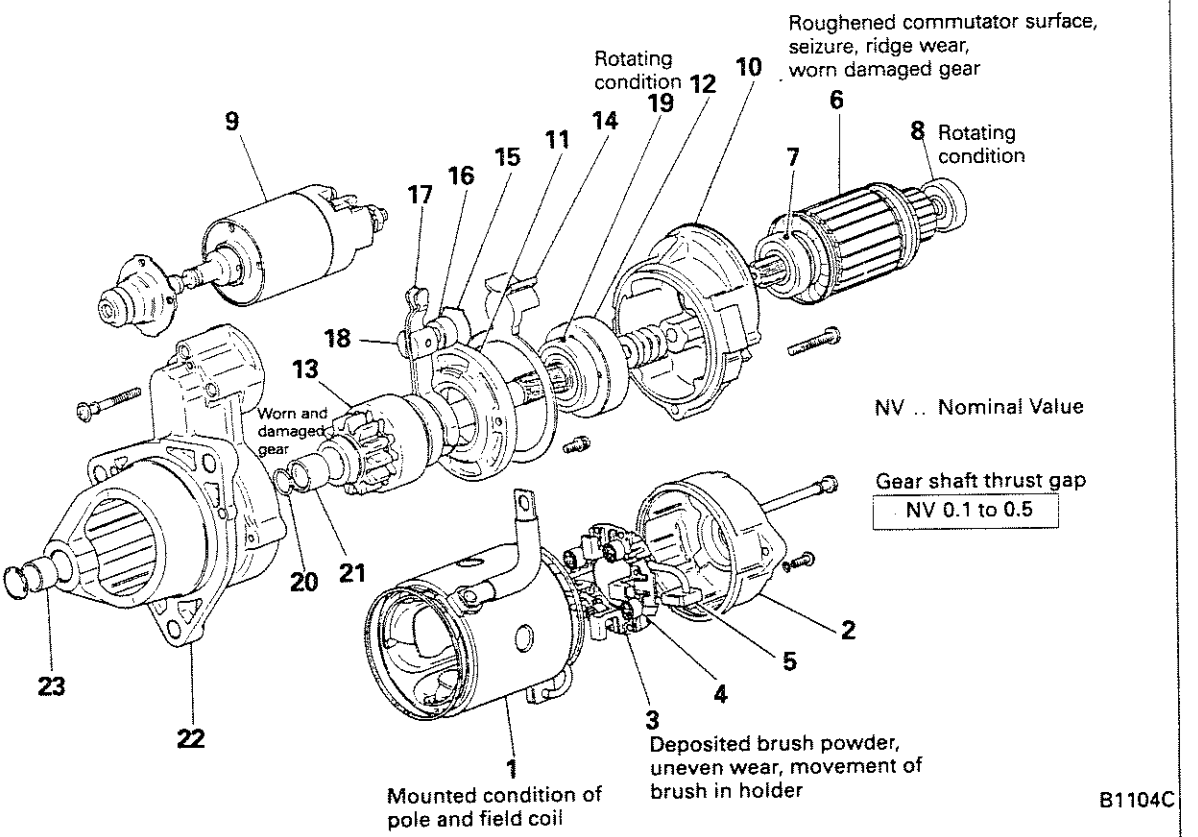

Disassembly sequence

① Yoke assembly
2 Rear bracket
3 Brush holder
④ Brush spring
⑤ Brush
6 Armature
*7 Front bearing
*8 Rear bearing
⑨ Magnetic switch
10 Center bracket
⑪ Gear bracket
⑫ Gear shaft
⑬ Overrunning clutch
14 Packing
15 Plate
16 Spacer
17 Lever
18 Collar
*19 Gear shaft bearing
⑳ Ring
㉑ Pinion stopper
22 Front bracket
*23 Sleeve bearing

Parts marked with * should not be removed unless defects are evident.
For parts with an encircled number, refer to Disassembly Procedure that follows.

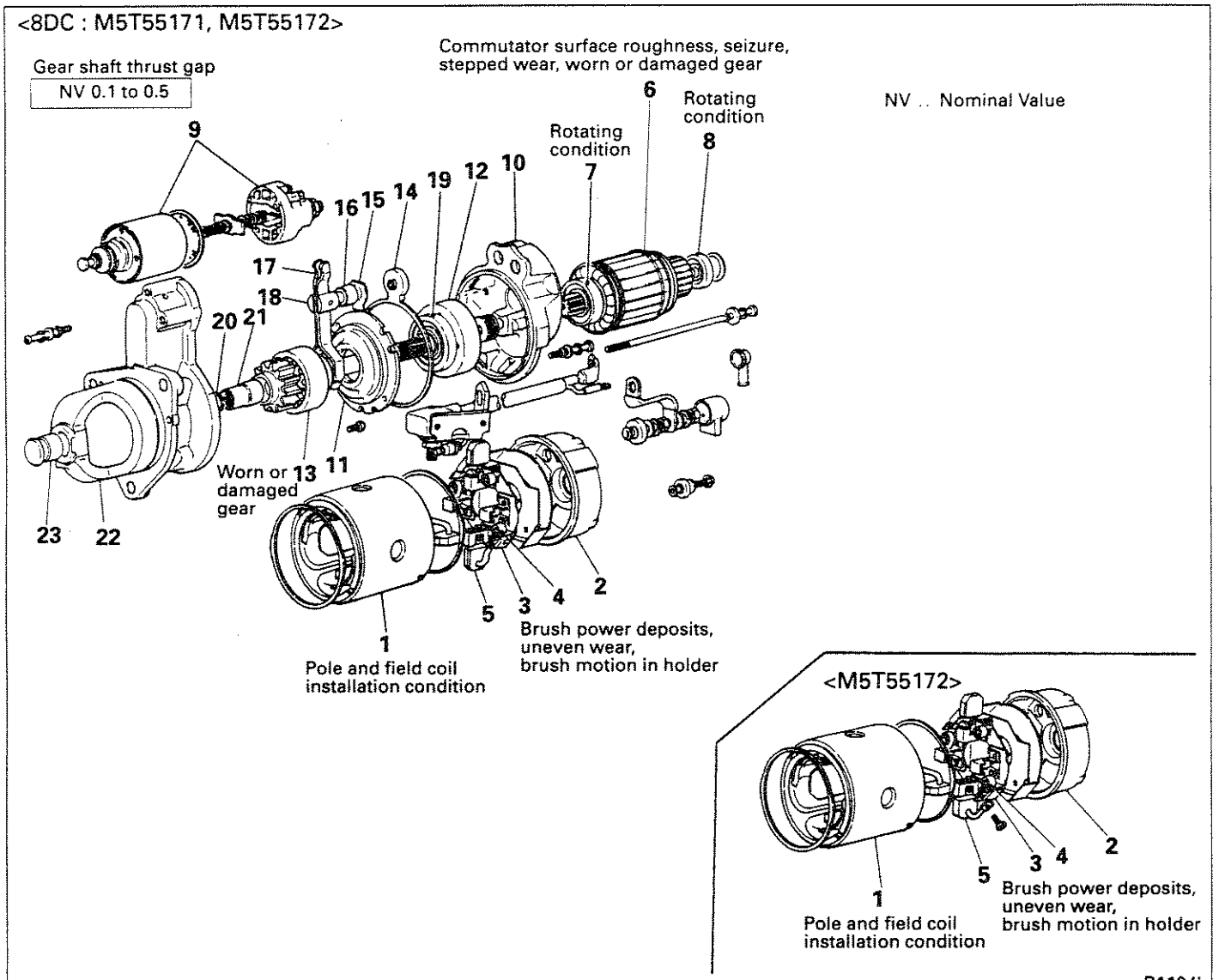

Disassembly sequence

① Yoke assembly
2 Rear bracket
3 Brush holder
④ Brush spring
⑤ Brush
6 Armature
*7 Front bearing
*8 Rear bearing
⑨ Magnetic switch
10 Center bracket
⑪ Gear bracket
⑫ Gear shaft
⑬ Overrunning clutch
14 Packing
15 Plate
16 Spacer
17 Lever
18 Collar
*19 Gear shaft bearing
⑳ Ring
㉑ Pinion stopper
22 Front bracket
*23 Sleeve bearing

Parts marked with * should not be removed unless defects are evident.
For parts with an encircled number, refer to Disassembly Procedure that follows.

Disassembly Procedure

The disassembly procedure is common to all models. The following description is based on the model M3T95082 starter.

(1) Removal of yoke assembly

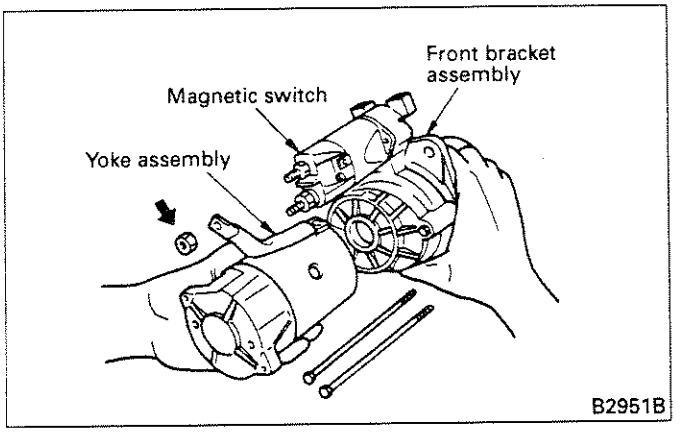

Remove the magnetic switch and separate the front bracket assembly and yoke assembly.

NOTE:

Do not drop the armature.

Especially when disassembling with the armature staying in the yoke, do not tilt the yoke assembly.

(2) Inspection of gear shaft thrust gap

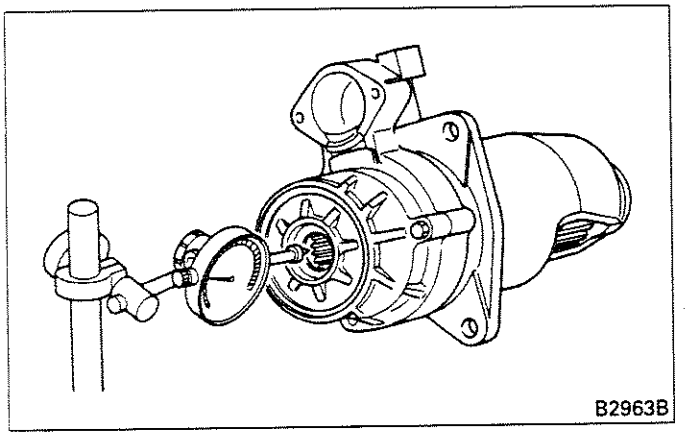

Before disassembly, set the dial indicator as shown to measure the thrust gap in the gear shaft. If the measurement is out of specification, use adjusting washers to obtain correct gap. [For adjustment procedure, refer to Item (8), Section 5.1.3.]

(3) Removal of overrunning clutch

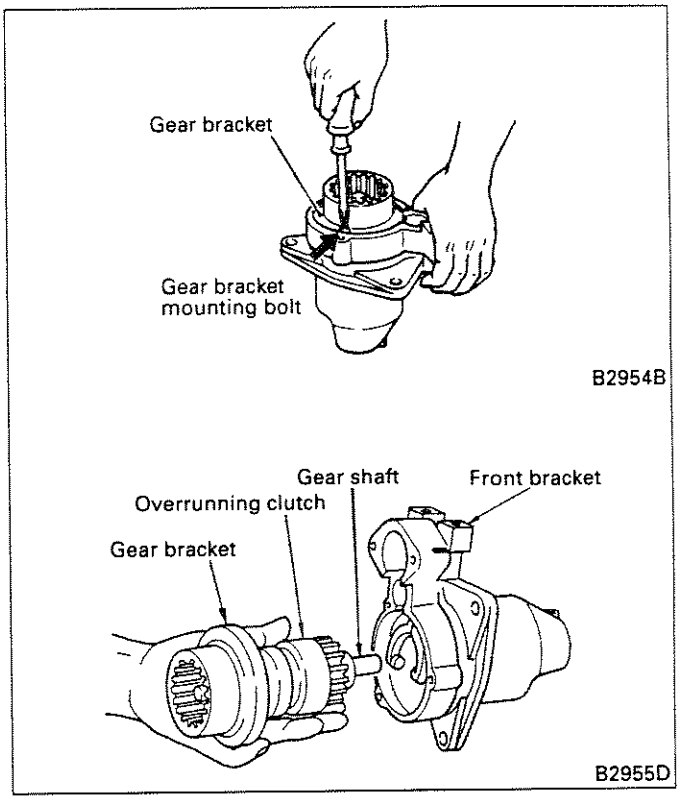

(a) Remove the gear bracket mounting bolt and remove the overrunning clutch, to which the gear shaft and gear bracket remain installed, from the front bracket.

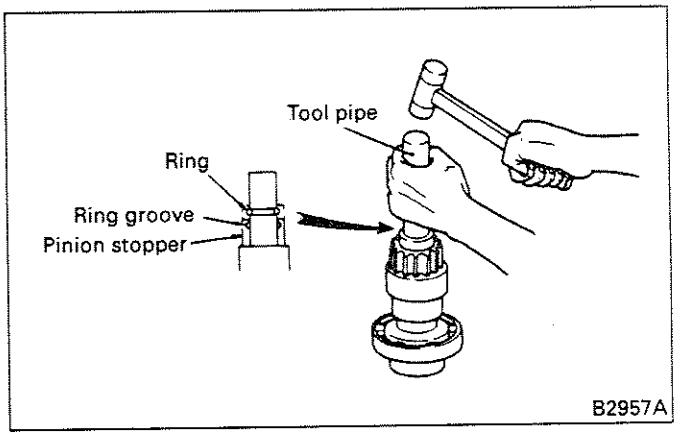

(b) Apply a tubular tool to the pinion stopper and hammer the pinion stopper out toward the pinion side. Then remove the ring.

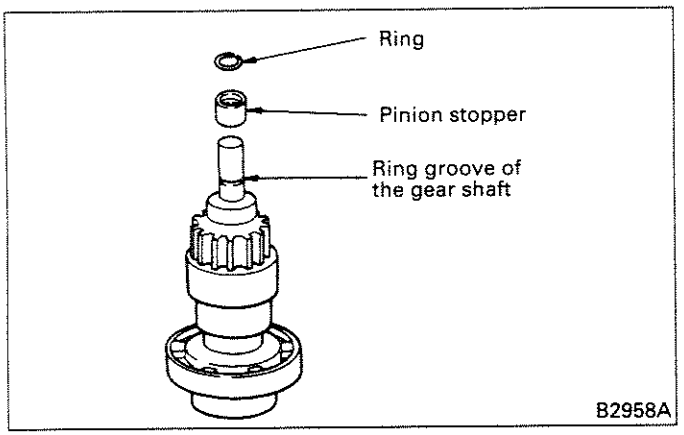

(c) Remove the ring from the ring groove of the gear shaft. Remove the pinion stopper from the gear shaft.

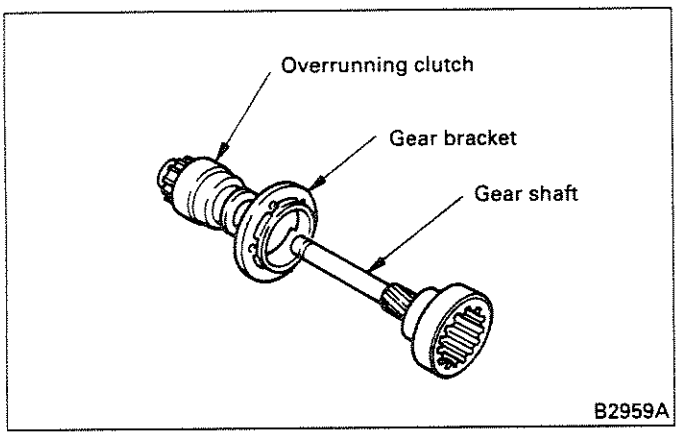

(d) Remove the overrunning clutch and gear bracket from the gear shaft.

(4) Removal of brush spring

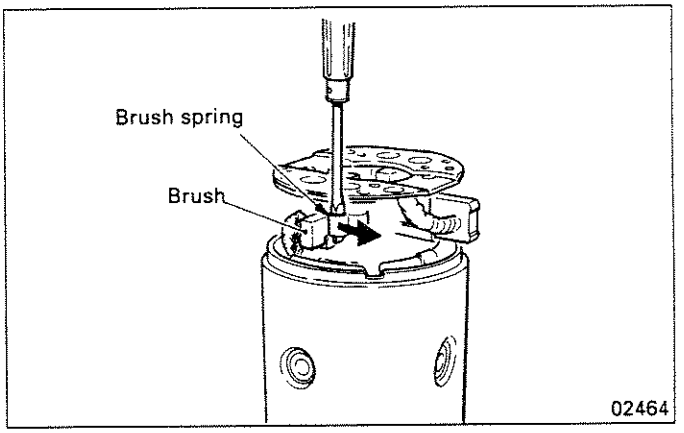

To remove the brush spring, first release the brush spring and remove the brush.

5.1.3 Inspection

Item		NV	L
Commutator O.D.	M3T M4T	38.7	38.1
	M5T, M-00095-75, M-00180-24	43.2	42.6
Commutator outside circumference runout		–	0.1
Depth of groove between segment		–	0.2 or less
Short circuit test, coil ground test, open circuit test		–	–

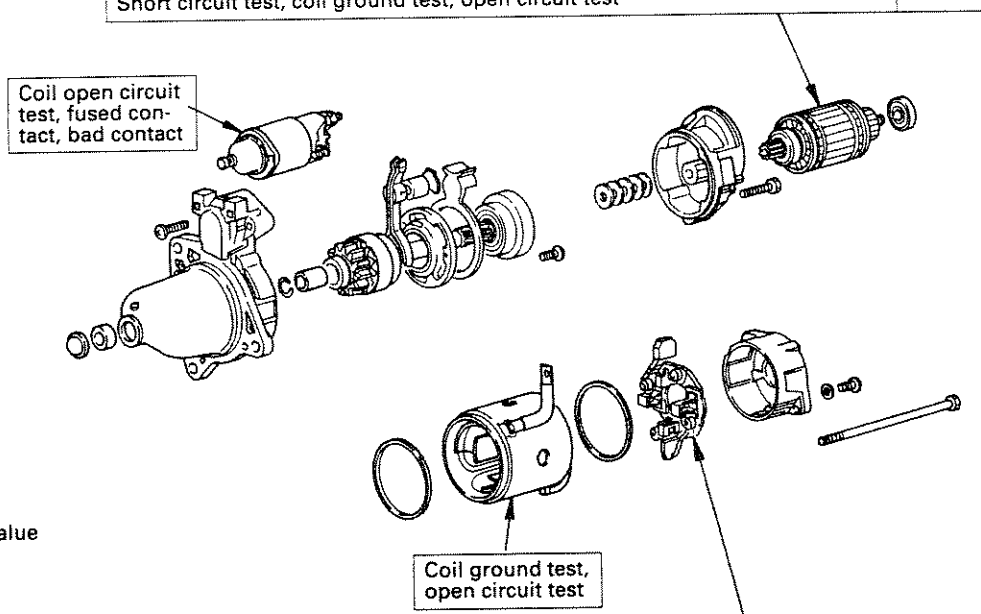

NV .. Nominal Value
L..... Limit

Item		NV	L
Brush spring pressure	M3T M5T, M-00095-75, M-00180-24	25 to 34 N {2.5 to 3.5 kgf}	18 N {1.8 kgf}
	M4T	33 to 45 N {3.4 to 4.6 kgf}	20 N {2 kgf}
Brush length	M3T	17	11
	M4T	20	13
	M5T, M-00095-75, M-00180-24	23	14
Insulation test		–	–

B1104E

Inspection Procedure

The inspection procedure given in the following is based on the model M3T95082 starter. For any other starter models, those points which are different from M3T95082 are described together.

(1) Armature inspection

(a) Coil short circuit test

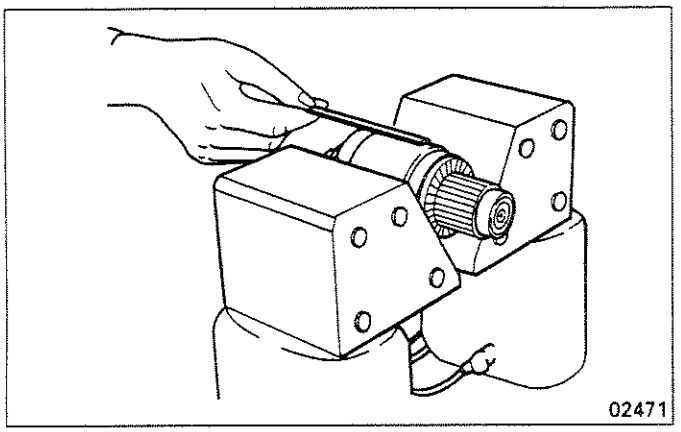

Place the armature on a growler tester. Hold a piece of iron in parallel with the armature and slowly turn armature by hand. If the iron piece is attracted or vibrates, it means there is a short circuit. Replace the armature.

(b) Coil ground test

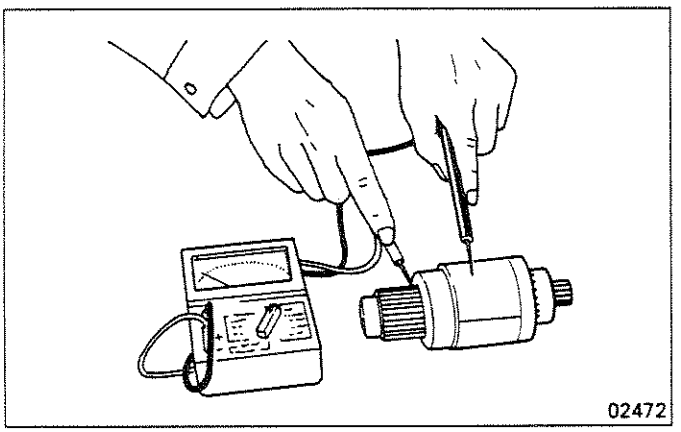

Check for continuity across the commutator and shaft (or core). If there is a continuity, indicating that the coil is grounded, replace the armature.

(c) Inspection of commutator

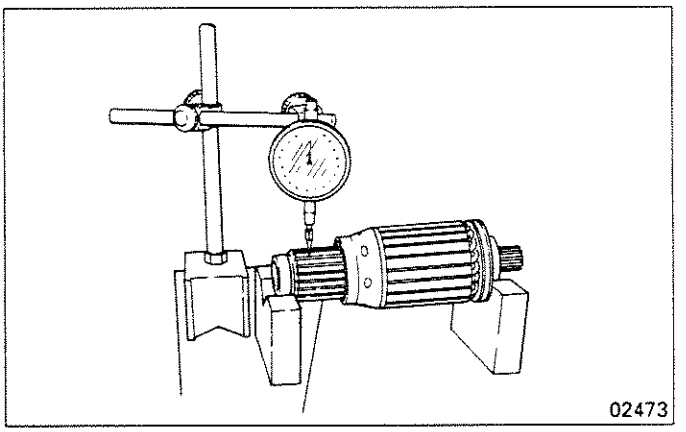

Measure the runout of commutator using a dial gauge and turning the armature by hand.
If the runout exceeds the limit, correct, ensuring that the O.D. limit is not exceeded.
If the commutator surface is rough developing ridge wear, correct with sandpaper (No. 300 to 500).
After correction, make sure to check the runout again.

(d) Commutator O.D.

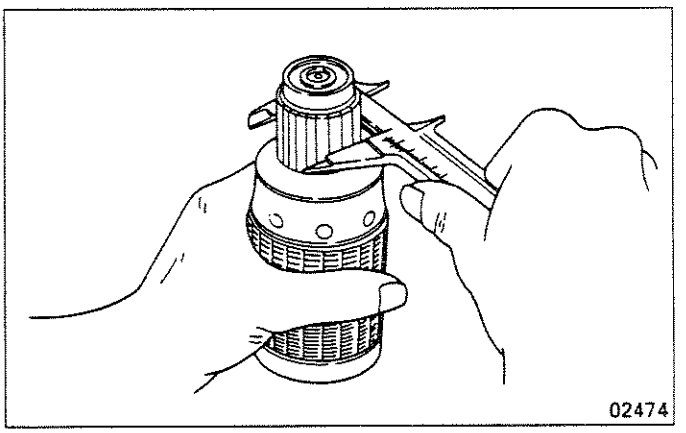

Measure the commutator O.D. If the measurement exceeds the limit, replace the armature.

(e) Mica depth groove between segments

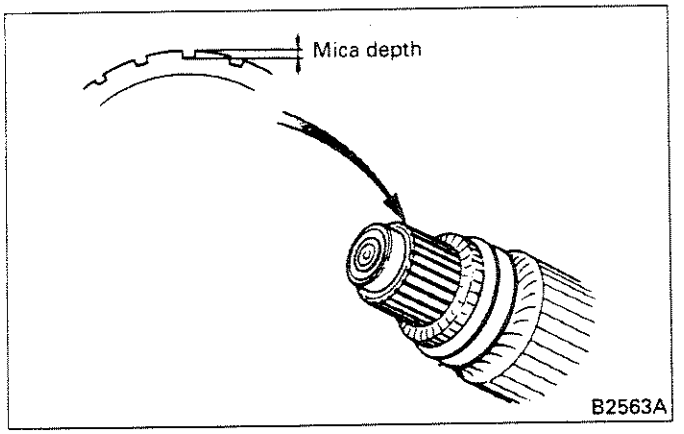

Measure the Mica depth of groove between segments. If it does not reach the limit, correct the armature.

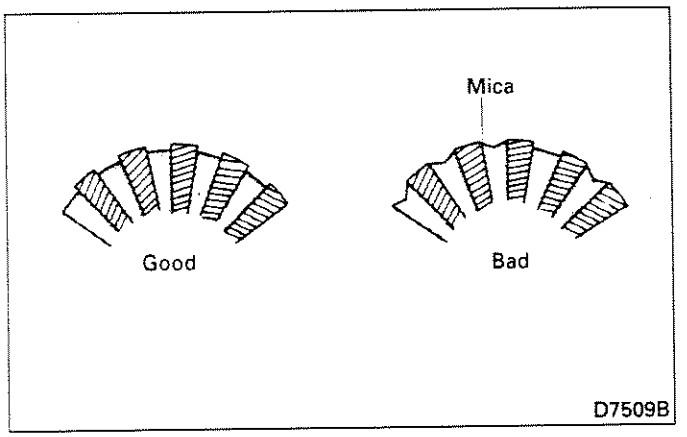

If the segment indicates the faulty condition as shown in the illustration, replace the armature.

(2) Inspection of field coil

(a) Coil open circuit test

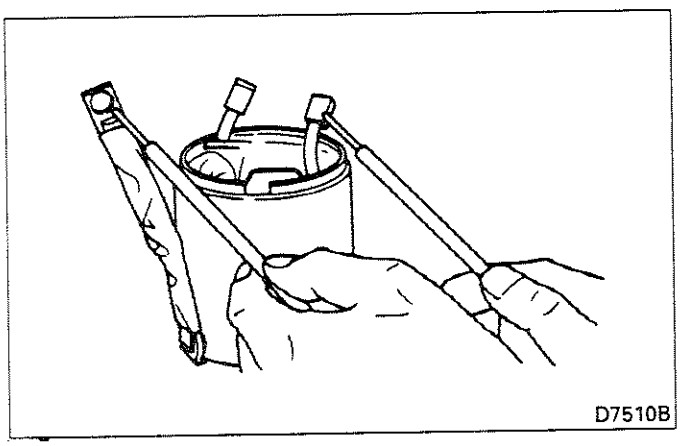

Check that there is continuity between the terminal lead and brush (+).

If there is no continuity, indicating an open circuit, replace the yoke assembly.

(b) Coil ground test

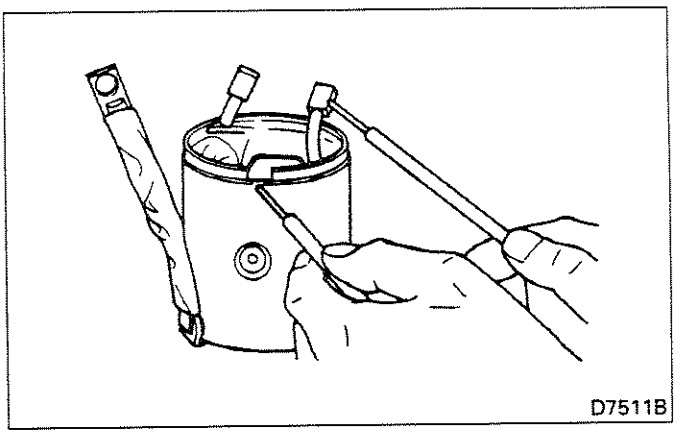

Check that there is no continuity between the yoke and brush (+).

If there is continuity, indicating that the coil is grounded, check for poor insulation.

If repair is impossible, replace the yoke assembly.

(3) Inspection of brush

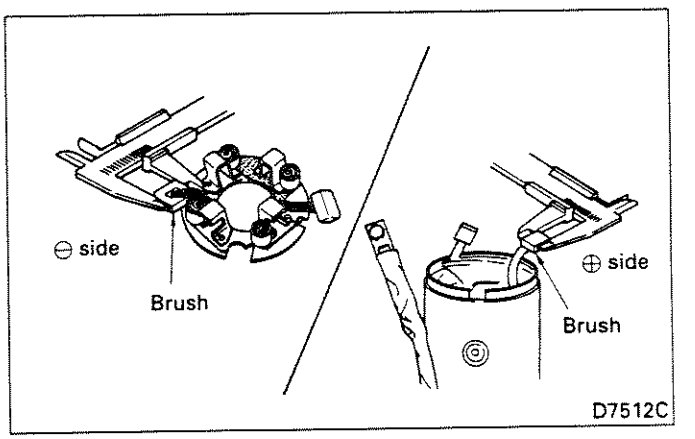

(a) Measure the brush length and, if the measurement is less than the limit, replace the brush as an assembly [(+) side: yoke assembly; (–) side: brush holder assembly].

(b) If the brush is unevenly worn or develops rough surfaces, correct with sandpaper (No. 300 to 500).

NOTE:

Correct the brush contact surface to a curve of the commutator.

(4) Inspection of brush spring

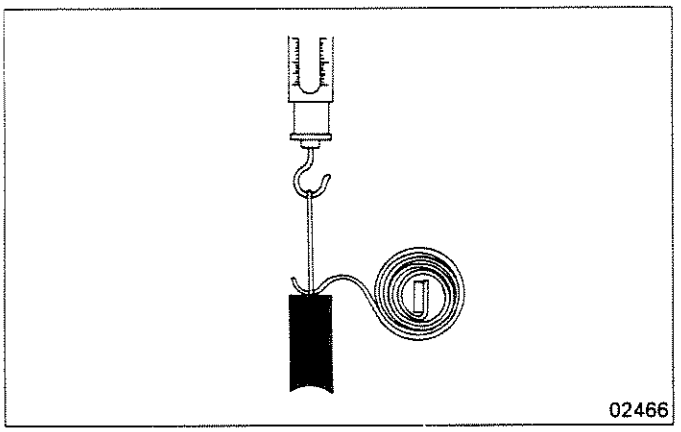

Measure the installed load of the brush spring. Using a new brush read the load at the moment the spring leaves the brush.

(5) Brush holder insulation test

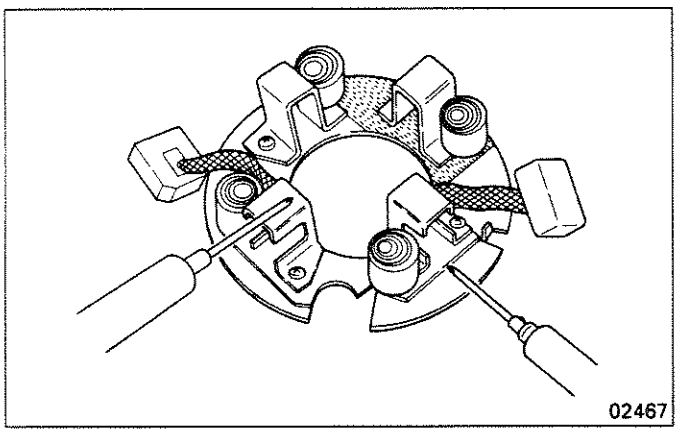

Check to ensure that there is no continuity between the (+) brush holder and (–) holder plate.
If there is continuity, replace the brush holder.

(6) Inspection of magnetic switch

(a) Coil open circuit test

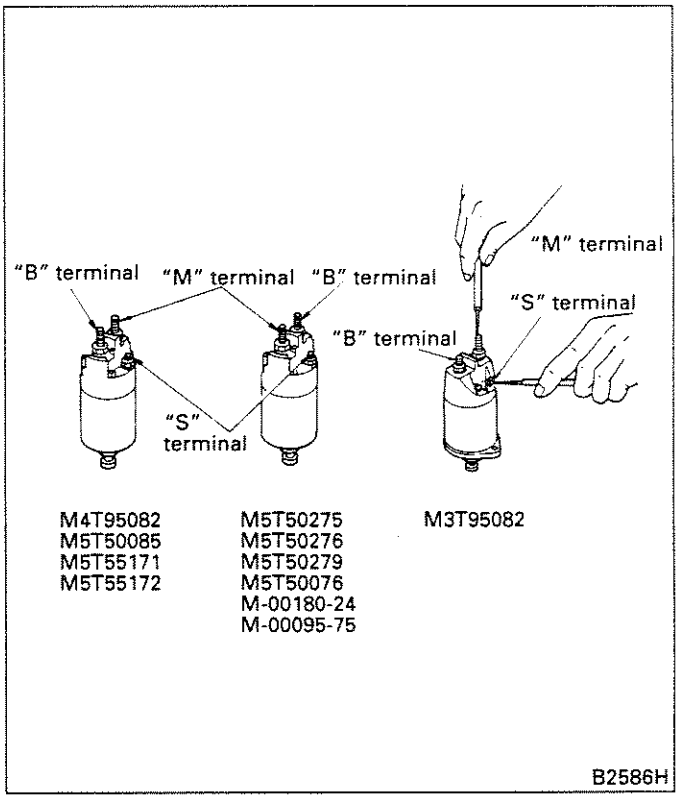

- Check that there is a continuity across "S" and "M" terminals. If there isn't, replace the magnetic switch.

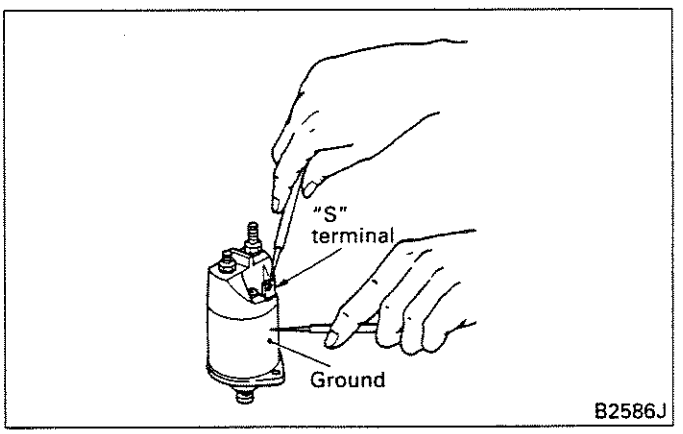

- Check to ensure that there is a continuity across "S" and ground terminals. If there isn't, replace the magnetic switch.

(b) Fused contact check

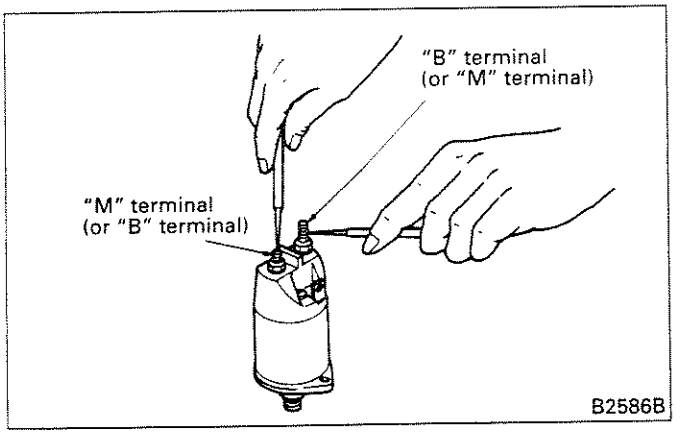

- Check that there is no continuity across "B" and "M" terminals. If there is, replace the magnetic switch.

(c) Contact test

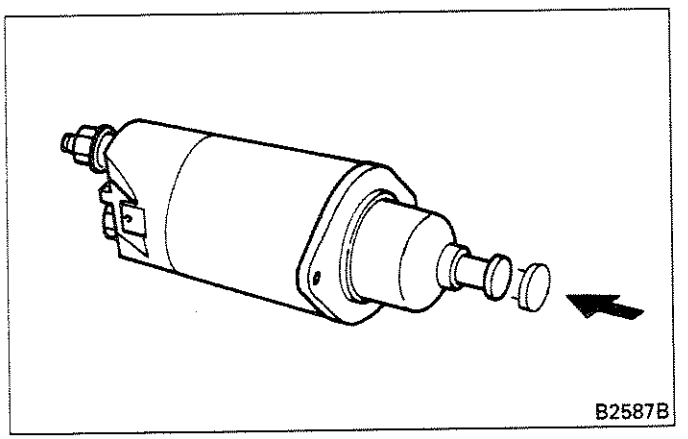

- Close the contacts of the magnetic switch as shown in the illustration.

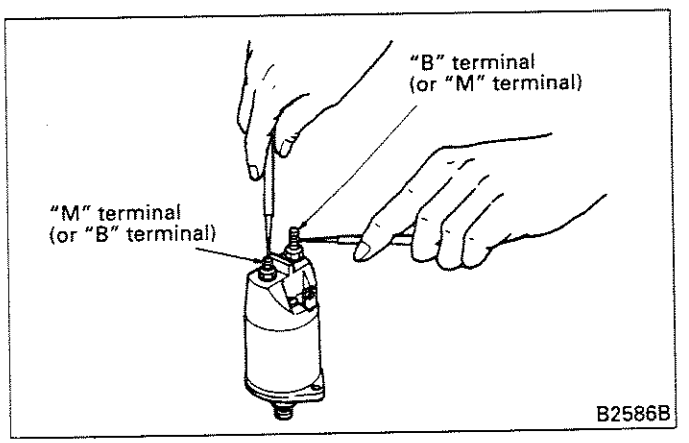

- In this condition, check that there is a continuity across "B" and "M" terminals. If there isn't, replace the magnetic switch.

(7) Inspection of overrunning clutch

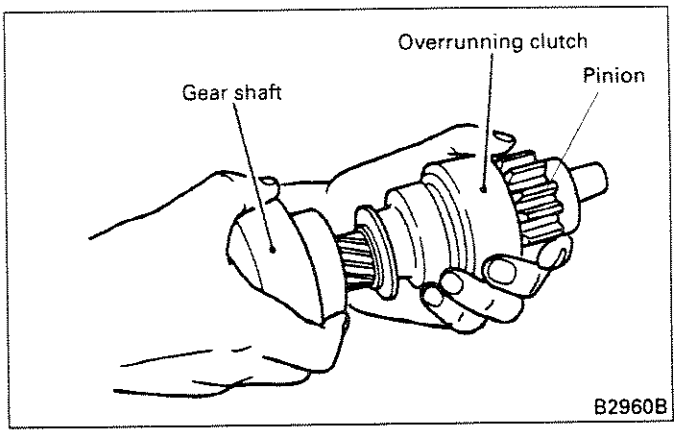

Install the gear shaft to the overrunning clutch and check to see if the gear shaft turns smoothly when turned clockwise (in the drive direction) and locks when turned counterclockwise.
If any unusual condition is noted, replace the overrunning clutch.
With the overrunning clutch fitted into the gear shaft, check also that the overrunning clutch moves smoothly along the splines.

NOTE:
Do not clean the overrunning clutch with cleaning oil. If the overrunning clutch is cleaned with cleaning oil, the grease inside it will come out.

(8) Adjustment of gear shaft thrust gap

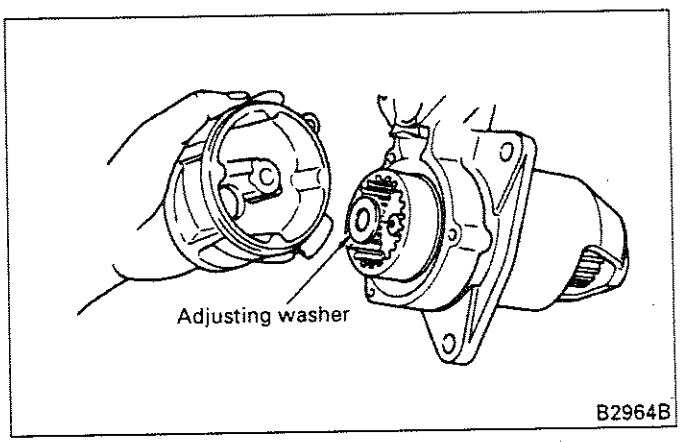

If the thrust gap is out of specification, insert the adjusting washer into the position shown.
[For adjusting procedures, refer to Item (2), Section 5.1.2.]

(Adjusting washer: 0.25, 0.5 mm)

(9) Replacement of bearings

(a) Replacement of gear bearing
(Removal)

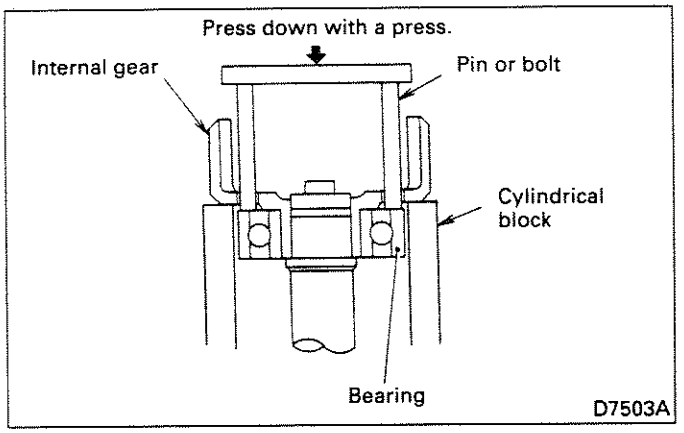

If the bearing of the gear shaft is defective, put a pin or bolt in each of the four holes (6 mm in diameter) in the internal gear and press down the bearing out of position with a press.

(Installation)

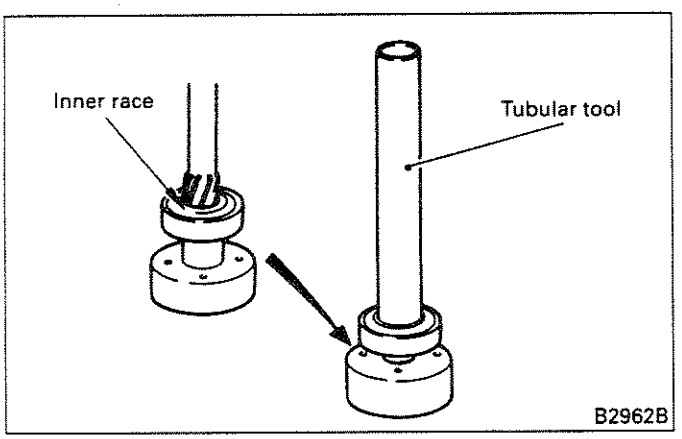

Apply a tubular tool to the bearing inner race and hammer it into position.

(b) Replacement of front and rear bearings
(Removal)

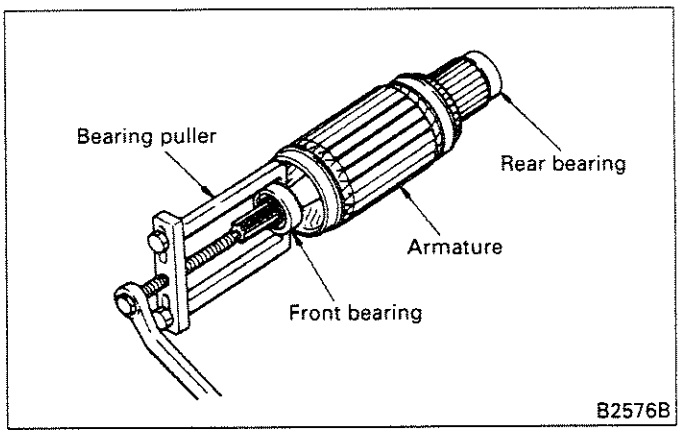

(Installation)

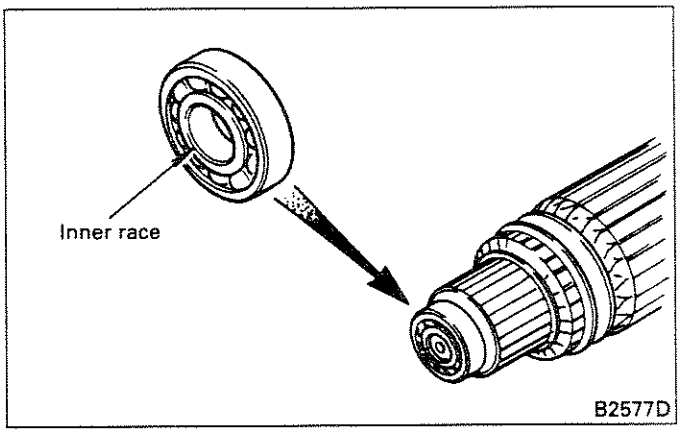

- Install the rear bearing by striking its inner race uniformly with a soft hammer.

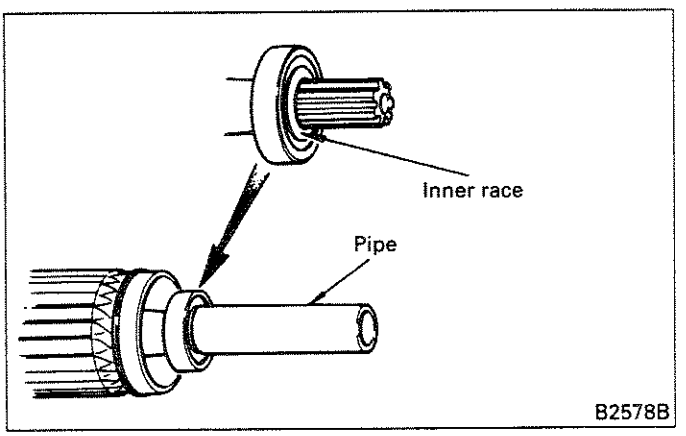

- Install the front bearing applying a tubular tool diameter as its inner race and striking it into position.

5.1.4 Reassembly

<6D2 : M3T95082>

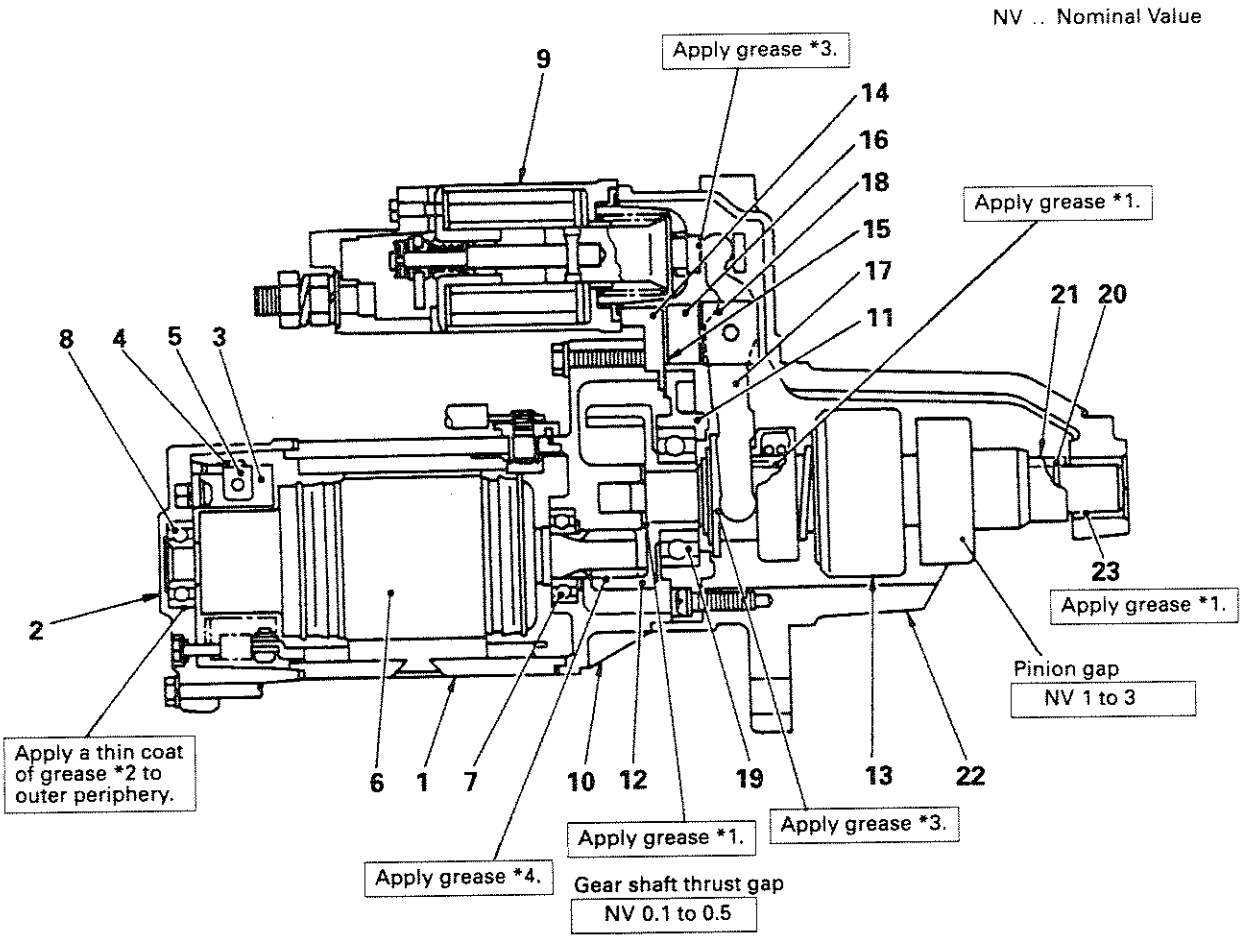

<Recommended greases>

*1 MULTEMP MS-2 (Kyodo Yushi) or equivalent
*2 MULTEMP HD-2 (Kyodo Yushi) or equivalent
*3 MYSTIK JT-6 (Kyodo Yushi) or equivalent
*4 MOLYKOTE AS-19 (Dow Corning) or equivalent

Assembly sequence

㉒→23
⑫→19→⑪→⑬→㉑→⑳
⑰→⑱
→16→15→14→10→⑨
6→7→8
3→5→4→①
→2

For parts with an encircled number, refer to Reassembly Procedure that follows.

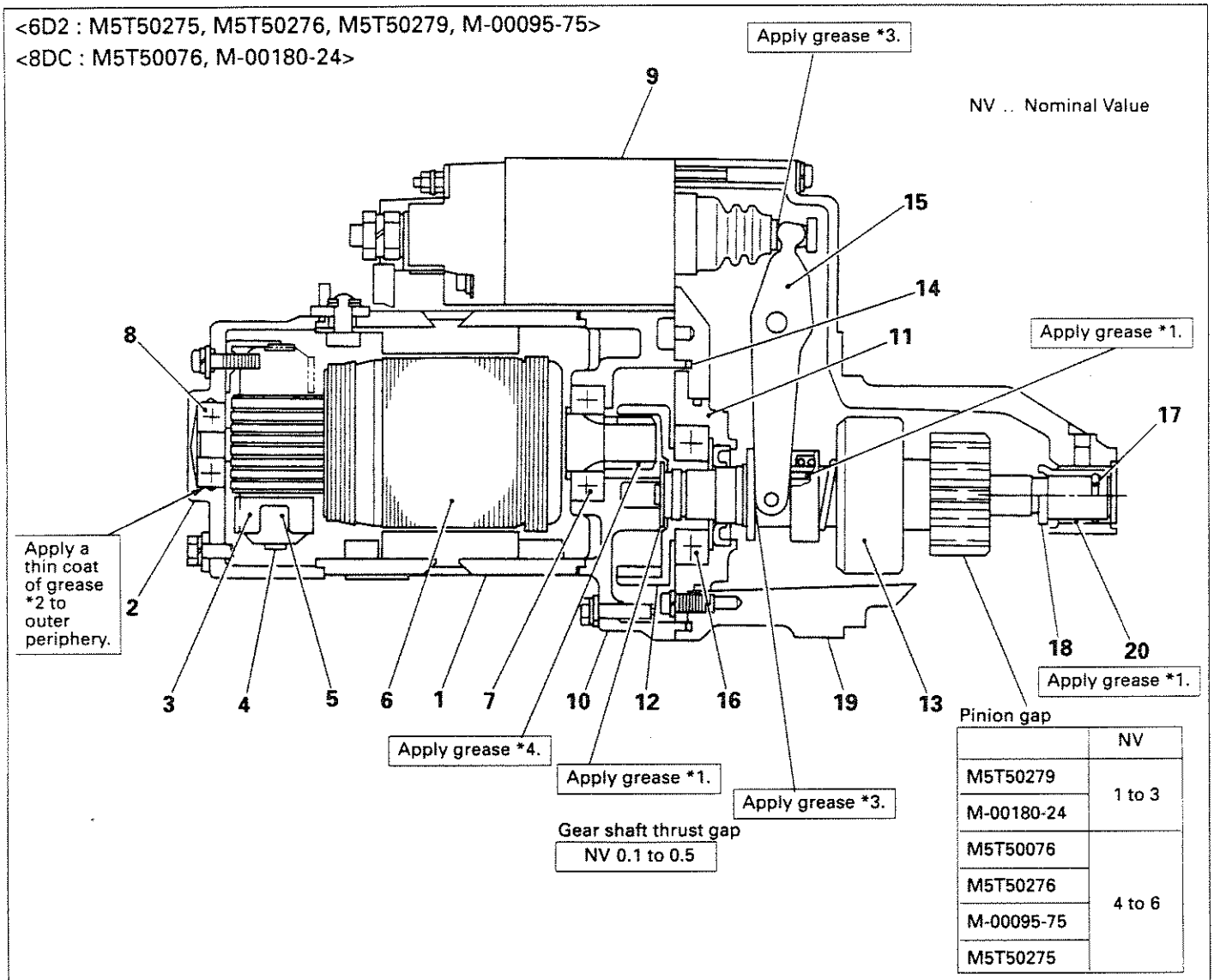

	NV
M5T50279	1 to 3
M-00180-24	
M5T50076	4 to 6
M5T50276	
M-00095-75	
M5T50275	

<Recommended greases>

*1 MULTEMP MS-2 (Kyodo Yushi) or equivalent
*2 MULTEMP HD-2 (Kyodo Yushi) or equivalent
*3 MYSTIK JT-6 (Kyodo Yushi) or equivalent
*4 MOLYKOTE AS-19 (Dow Corning) or equivalent

Assembly sequence

⑫→16→⑪→⑬→⑱→⑰→⑮ ┐
19→20 ┘→14→10→⑨ ┐
6→7→8 ┘
3→5→4→① ┘→2

For parts with an encircled number, refer to Reassembly Procedure that follows.

<8DC : M5T50085>

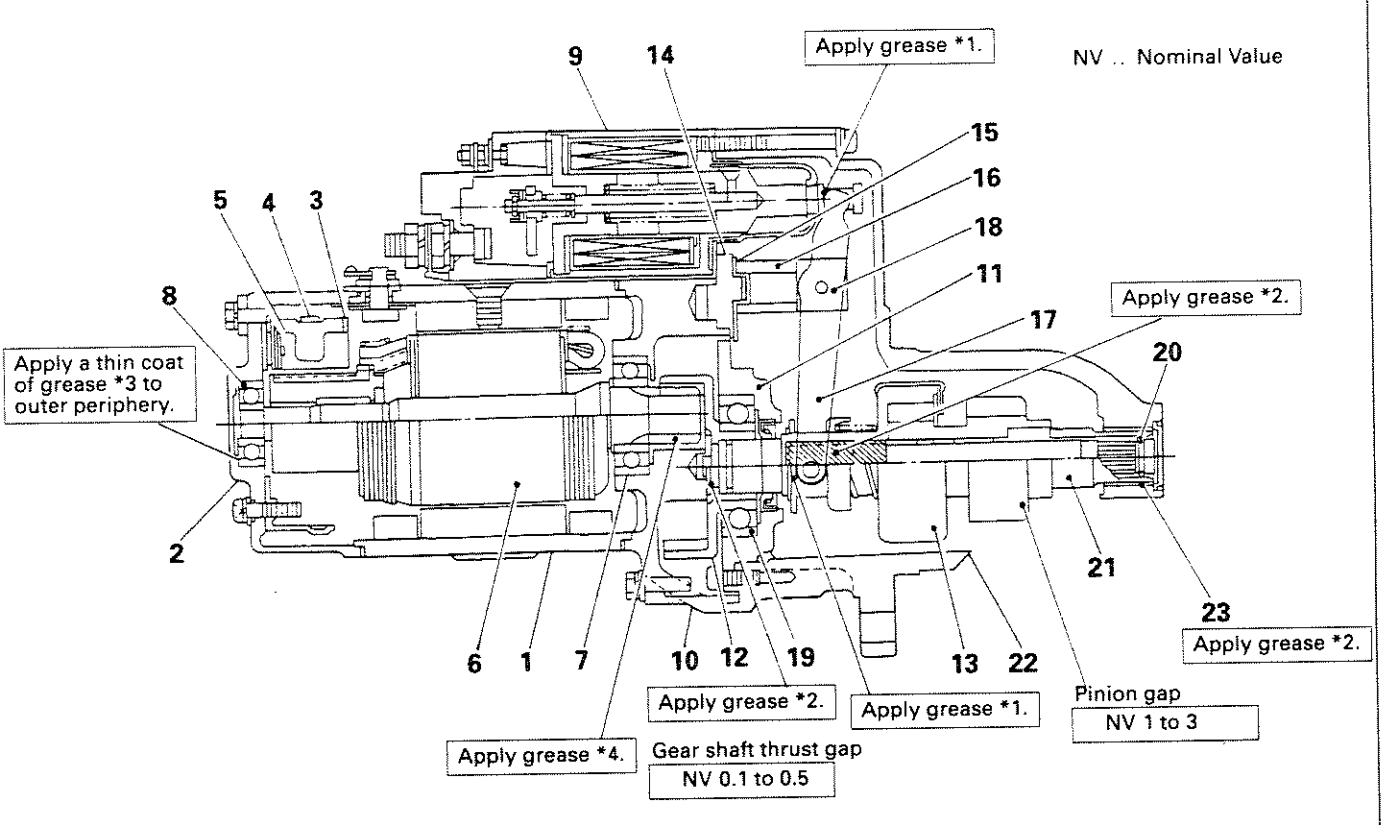

<Recommended greases>

*1 MYSTIK JT-6 (Kyodo Yushi) or equivalent
*2 MULTEMP MS-2 (Kyodo Yushi) or equivalent
*3 MULTEMP HD-2 (Kyodo Yushi) or equivalent
*4 MOLYKOTE AS-19 (Dow Corning) or equivalent

Assembly sequence

㉒→23
⑫→19→⑪→⑬→㉑→⑳
⑰→⑱
→16→15→14→10→⑨
6→7→8
3→5→4→①
→2

For parts with an encircled number, refer to Reassembly Procedure that follows.

D7566B

<8DC : M4T95082>

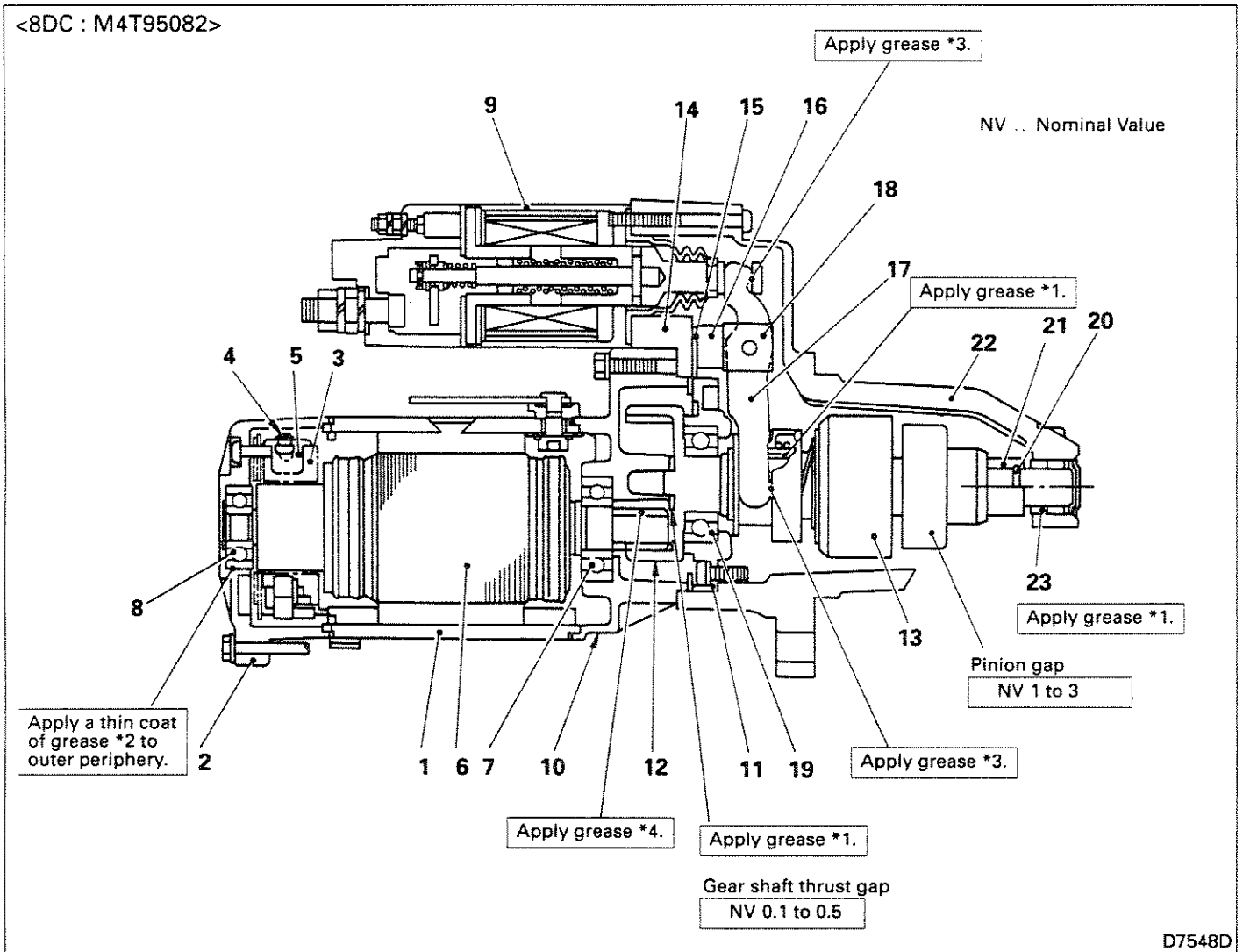

<Recommended greases>

*1 MULTEMP MS-2 (Kyodo Yushi) or equivalent
*2 MULTEMP HD-2 (Kyodo Yushi) or equivalent
*3 MYSTIK JT-6 (Kyodo Yushi) or equivalent
*4 MOLYKOTE AS-19 (Dow Corning) or equivalent

Assembly sequence

㉒→23
⑫→19→⑪→⑬→㉑→⑳
⑰→⑱
→16→15→14→10→⑨
6→7→8
3→5→4→①
→2

For parts with an encircled number, refer to Reassembly Procedure that follows.

<8DC : M5T55171>

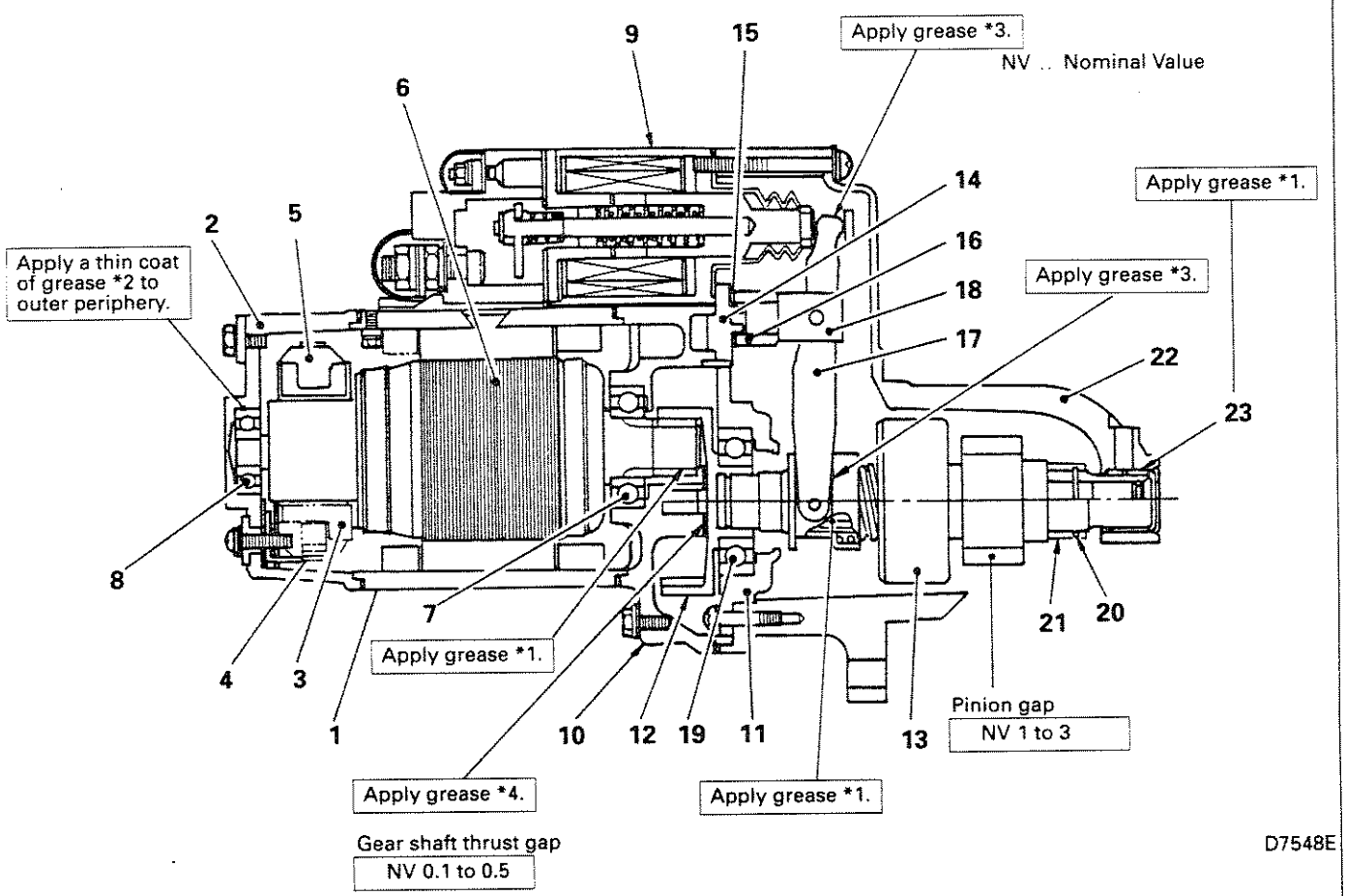

<Recommended greases>

*1 MULTEMP MS-2 (Kyodo Yushi) or equivalent
*2 MULTEMP HD-2 (Kyodo Yushi) or equivalent
*3 MYSTIK JT-6 (Kyodo Yushi) or equivalent
*4 MOLYKOTE AS-19 (Dow Corning) or equivalent

Assembly sequence

㉒→23
⑫→19→⑪→⑬→㉑→⑳
⑰→⑱
→16→15→14→10→⑨
6→7→8
3→5→4→①
→2

For parts with an encircled number, refer to Reassembly Procedure that follows.

<8DC : M5T55172>

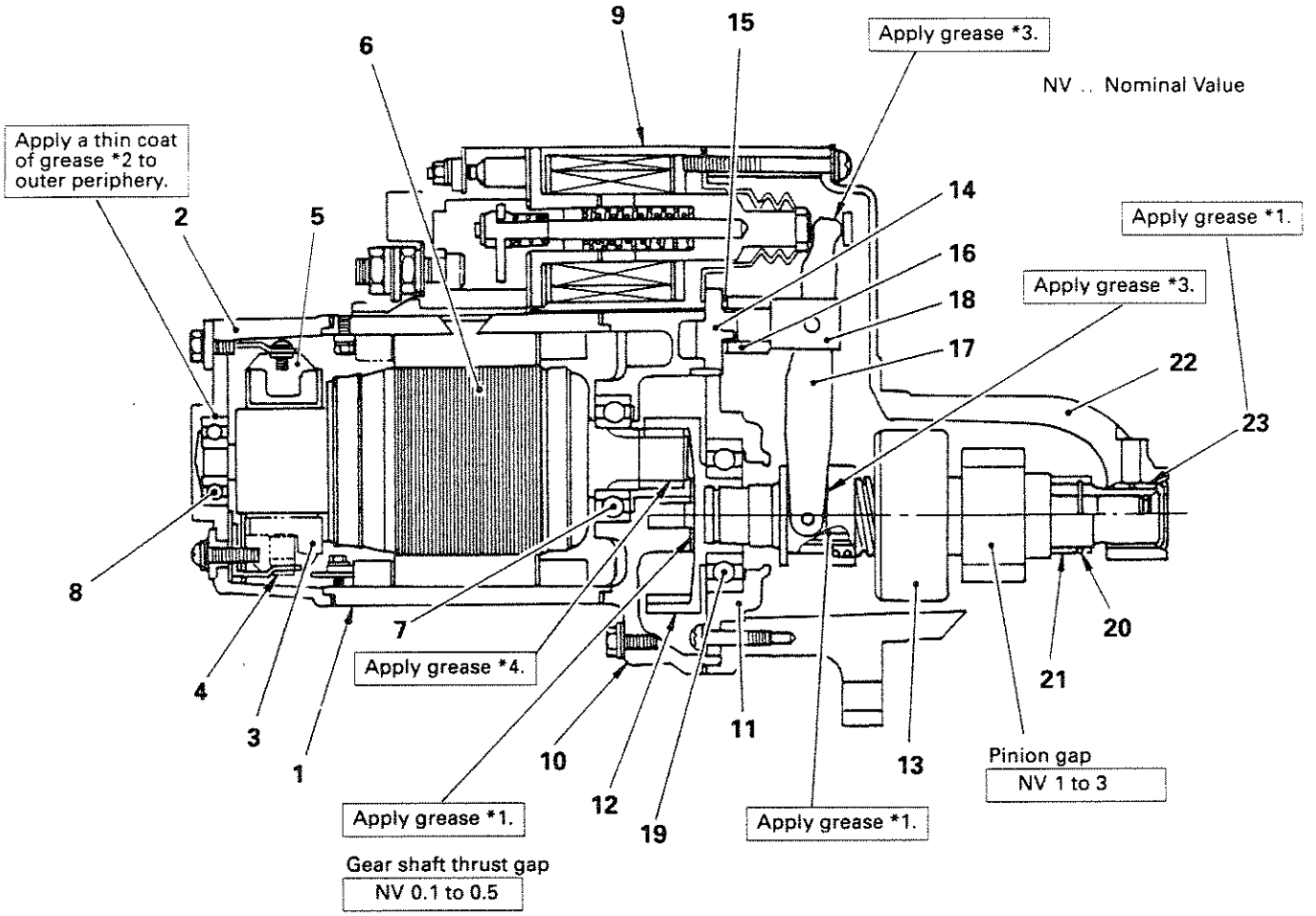

<Recommended greases>

*1 MULTEMP MS-2 (Kyodo Yushi) or equivalent
*2 MULTEMP HD-2 (Kyodo Yushi) or equivalent
*3 MYSTIK JT-6 (Kyodo Yushi) or equivalent
*4 MOLYKOTE AS-19 (Dow Corning) or equivalent

Assembly sequence

14→16→15→⑱→⑰ 23
⑫→⑪→⑬→㉑→⑳→22→10
19 ⑨
3→4→5→①→2
6→7→8

For parts with an encircled number, refer to Reassembly Procedure that follows.

Reassembly Procedure

The reassembly procedure given in the following is based on the model M3T95082 starter. For any other starter models, those points which are different from M3T95082 are described together.

(1) Reassemble the gear shaft, overrunning clutch, and gear bracket in the following way.

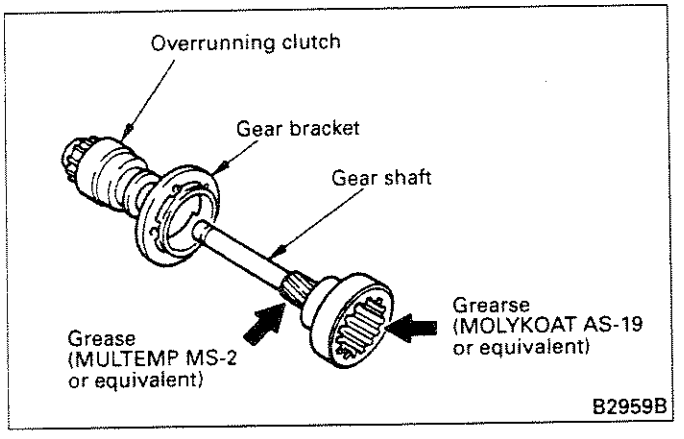

(a) Coat the portions in gear shaft shown with the specified greases and install the gear bracket and overrunning clutch over the gear shaft.

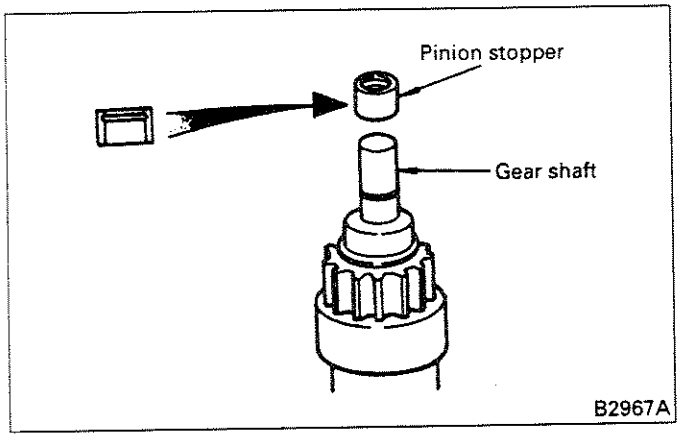

(b) Install the pinion stopper to the gear shaft in the direction shown.

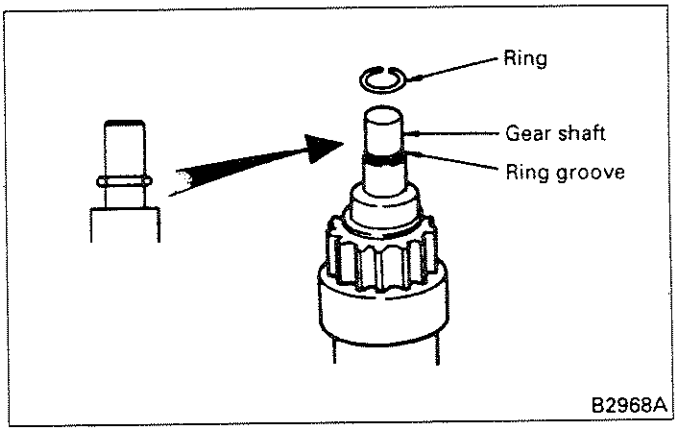

(c) Fit the ring into the ring groove in the gear shaft.

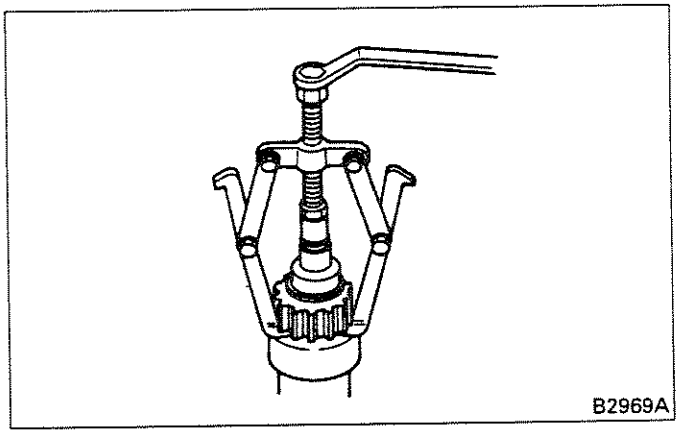

(d) Pull hard the pinion gear toward the ring and secure it by fitting the ring into the ring groove in pinion stopper.

(2) Installation of lever

(a) Collar fixed type

<M3T95082, M4T95082, M5T50085, M5T55172>

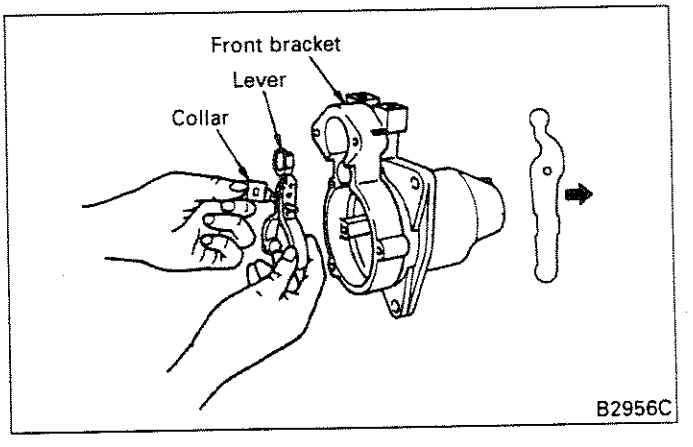

Install the lever in the direction shown, together with the collar, into the front bracket.

(b) Pin fixed type (Model M5T50076 only)

<M5T50275, M5T50276, M5T50279, M5T50076, M-00095-75, M-00180-24>

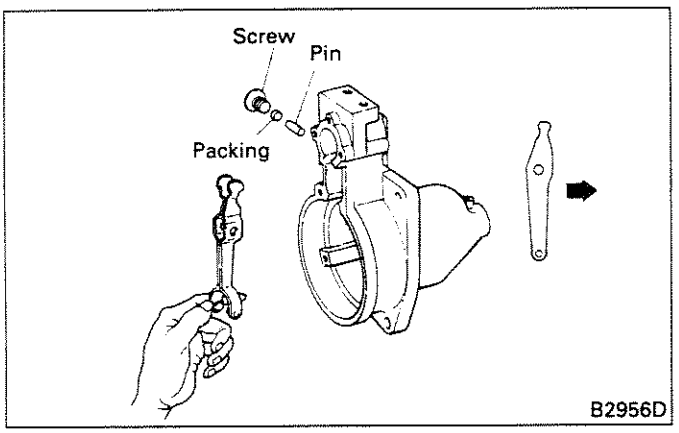

Insert the lever in the direction shown and mount it with the pin from outside the front bracket.

(3) Installation of overrunning clutch and gear shaft

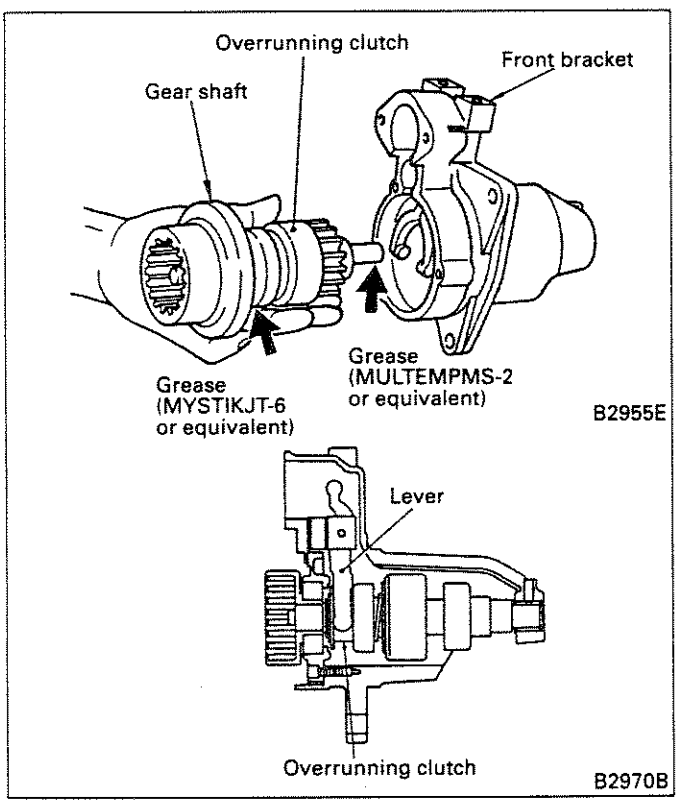

Before installing the overrunning clutch and gear shaft to the front bracket, be sure to apply the specified greases to the portions indicated.

Upon installation, make sure that the lever is wedged into the overrunning clutch.

(4) Installation of magnetic switch

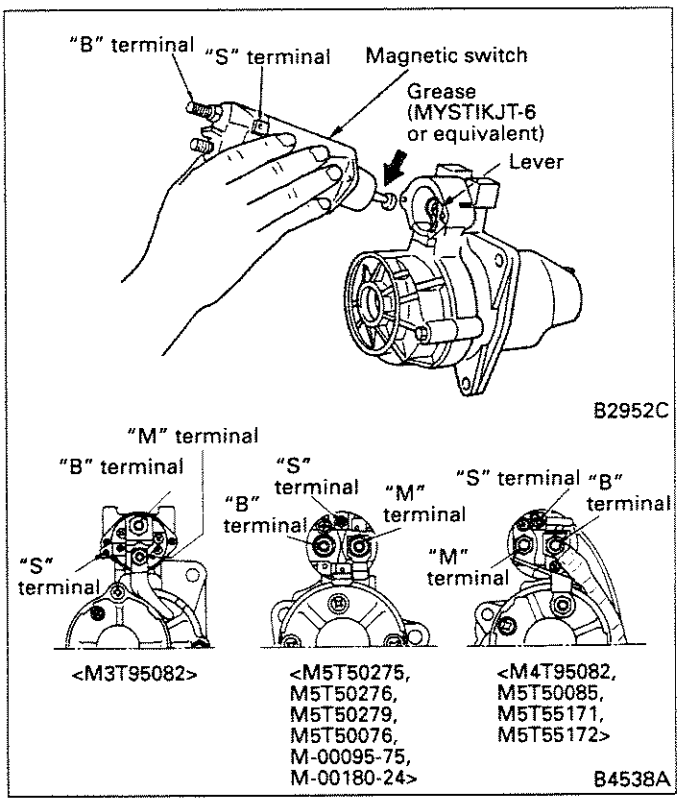

Apply grease to the part of the magnetic switch shown in the illustration, then fit the magnetic switch onto the lever. Type M3T magnetic switches should be fitted with the B terminal on top. Types M4T and M5T should be fitted with the S terminal on top.

(5) Installation of yoke assembly

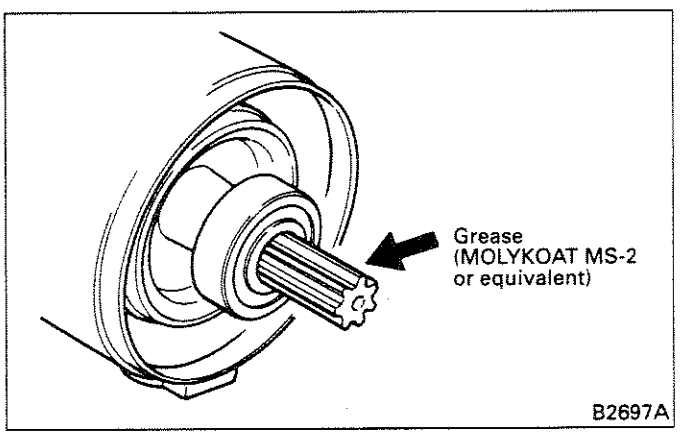

Apply the specified grease to the armature splines, then install the yoke assembly to the center bracket.

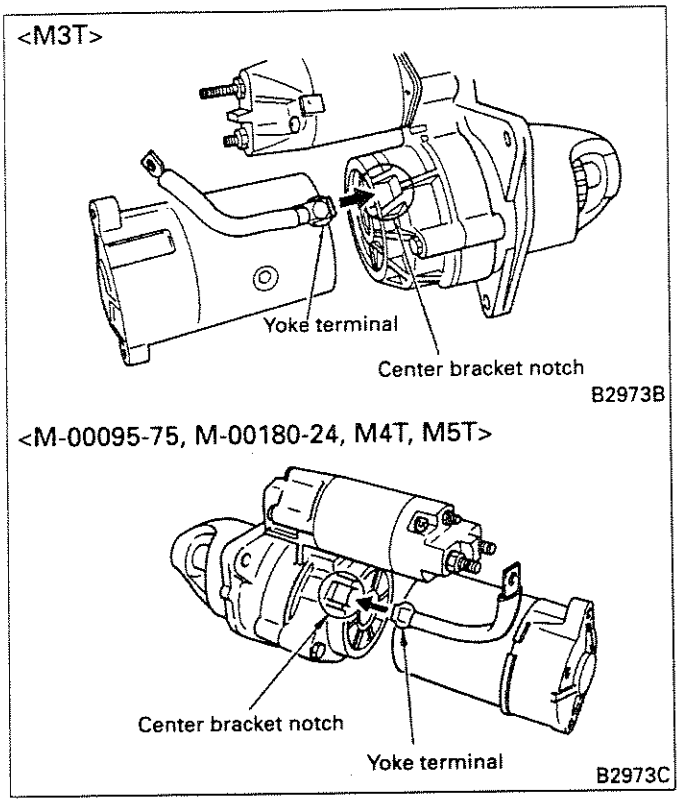

Fit the yoke assembly such that the yoke terminal fits into the center bracket notch.

5.1.5 Inspection and adjustment after reassembly

(1) Inspection of pinion gap

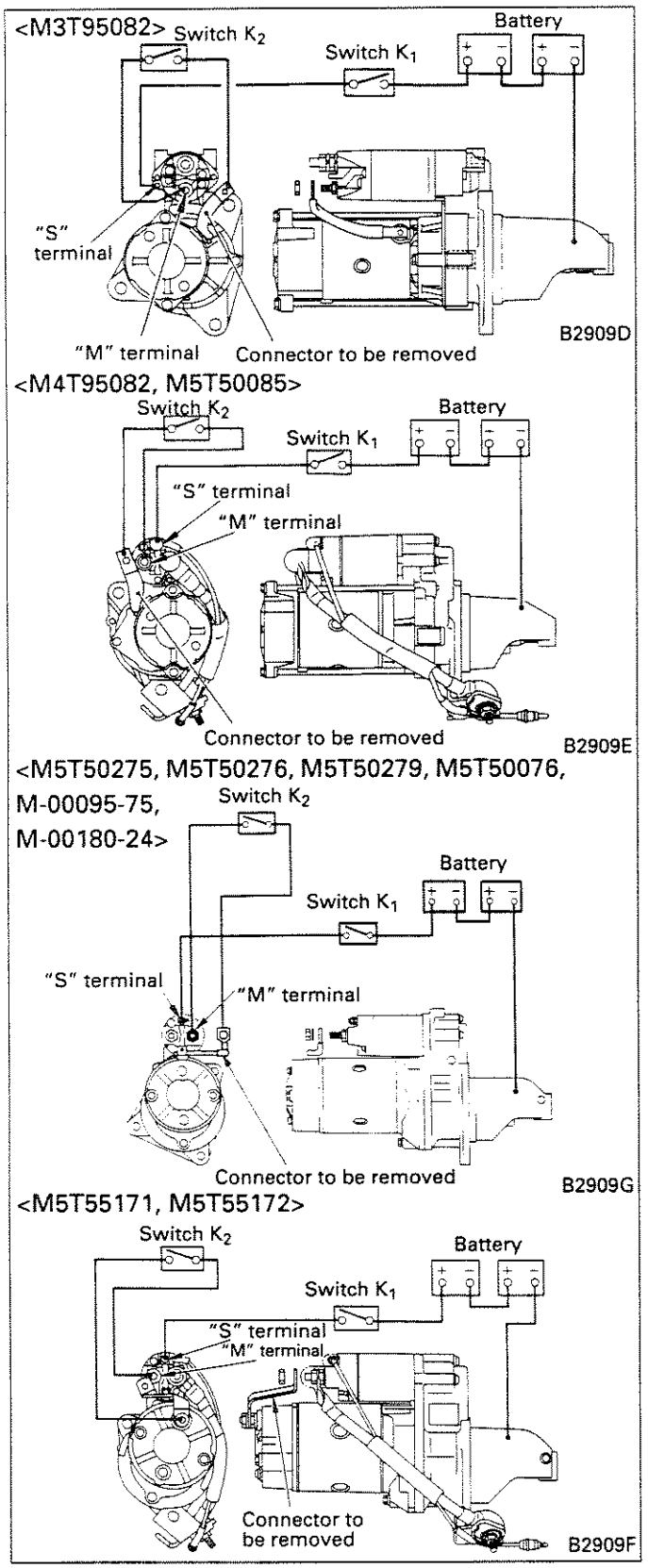

(a) Wire the reassembled starter as shown above.
(b) Turn ON switches K_1 and K_2 to project the pinion.
(c) Turn OFF switch K_2 to stop pinion from rotating.

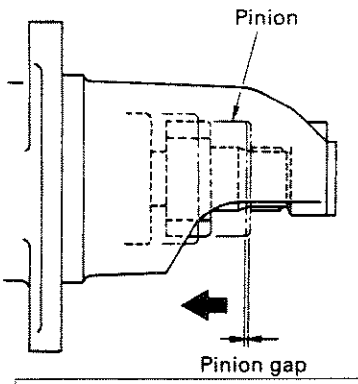

Model	NV
M3T95082, M4T95082, M5T50085, M5T50279, M5T55171, M5T55172, M-00180-24	1 to 3
M-00095-75, M5T50076, M5T50276, M5T50275	4 to 6

NV .. Nominal Value

B0054D

(d) Measure the axial movement (pinion gap) when the pinion is pushed lightly toward the armature side.

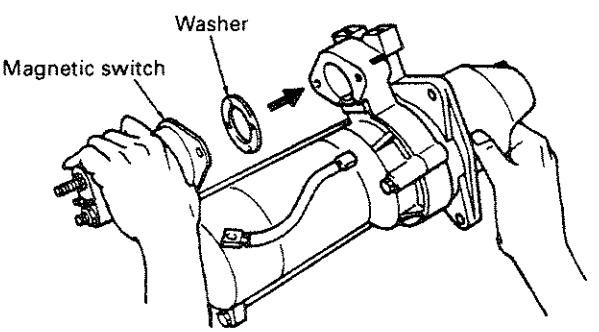

B2975B

(e) If the measurement is out of specification, increase or decrease the number of washers used at the portion to which magnetic switch is mounted.
Washers: 0.25, 0.5, 1.0 mm

(2) Inspection of no-load characteristics and magnetic switch operating voltage

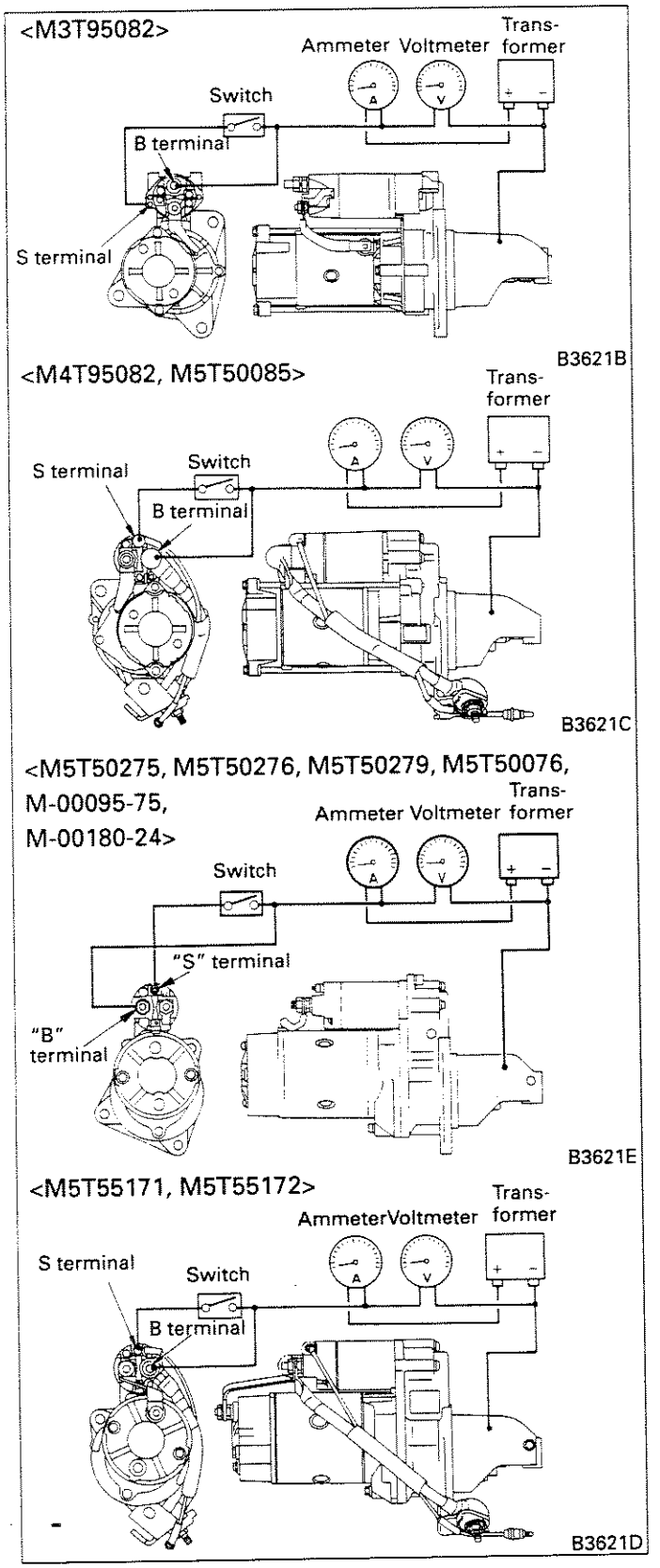

(a) Set up a circuit as shown including the ammeter, voltmeter and transformer.

NOTE:

1. **Use a wire as thick as possible and secure each connection firmly.**
2. **Apply voltage gradually from 0 V up to 24 V.**

(b) With the specified voltage applied, measure the current and speed of rotation. If the measurements are out of specification, inspect the starter again and replace any faulty components.
Measure the rotating speed by illuminating the pinion with strobe light.

Nominal values (no-load characteristics)

Type	Voltage	Nominal values	
		Current	Speed of rotation
M3T, M4T, M5T (except M5T55171, M5T55172, M-00180-24) M-00095-75	23.5 V	110A or less	3,300 rpm or above
M5T55171, M5T55172, M-00180-24	23.5 V	110A or less	3,400 rpm or above

(C) When a potential of 15 to 16V is applied, the pinion should spring out and turn. If the pinion does not spring out and turn unless the voltage is above the specified nominal level, inspect the starter again and replace any faulty components.

Nominal values (magnetic switch operating voltage)	16V or less

5.2 Starter Relay

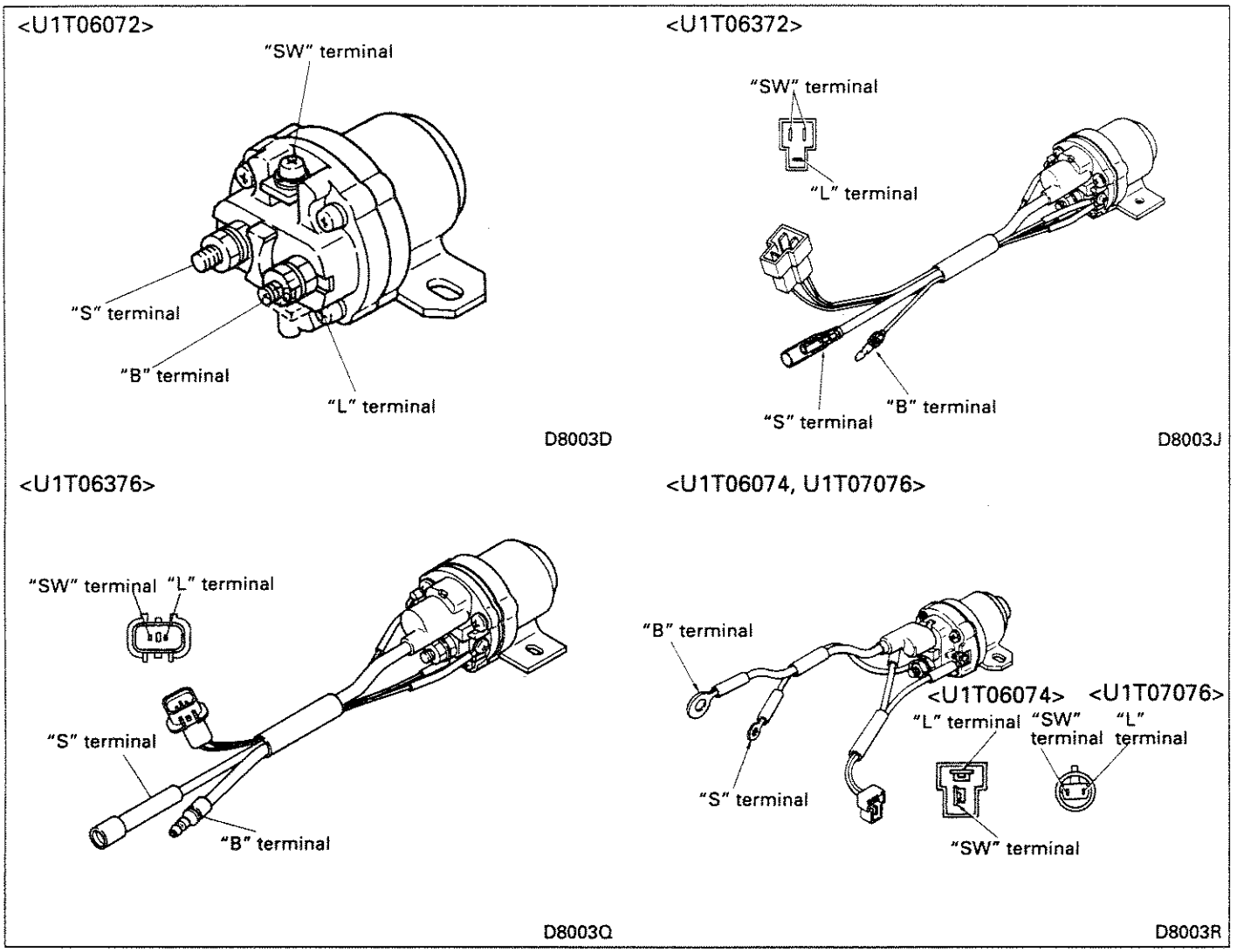

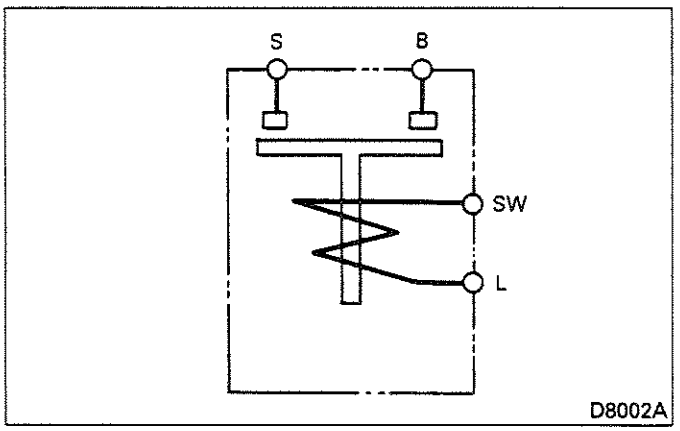

(a) Check for continuity between the "SW" and "L" terminals and check to ensure that the coil resistance is up to specification.

(b) Check to ensure that when the battery voltage (24 V) is applied across the "SW" and "L" terminals, there is continuity between the "B" and "S" terminals.

5.3 30 A, 35 A, 40 A <except A4T57471>, 80 A Alternators (with brush type)

5.3.1 Removal and installation

<6D2>

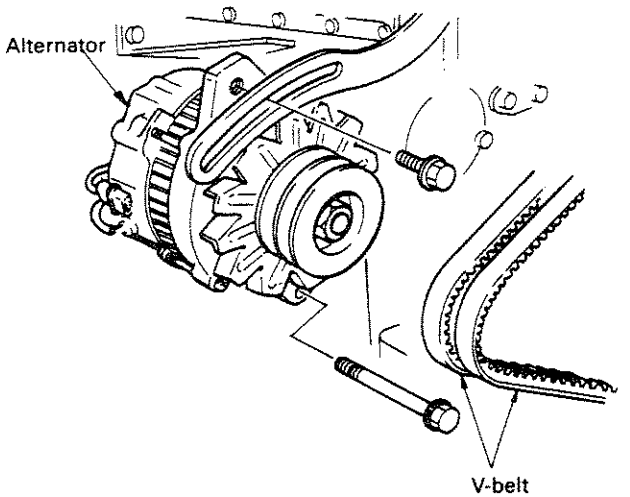

B0104H

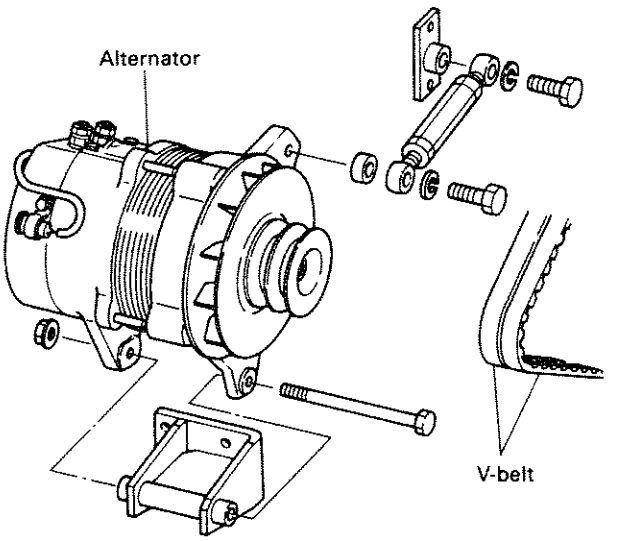

B5884A

<8DC9>

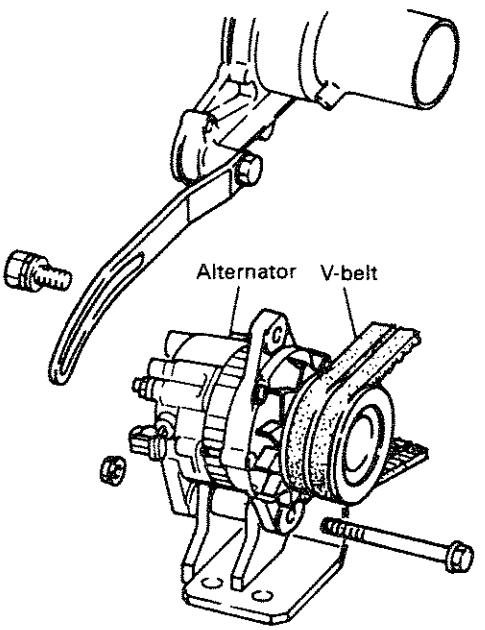

C0113E

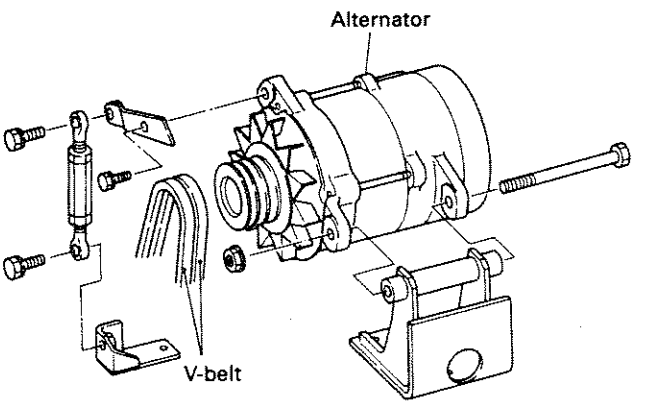

B5885A

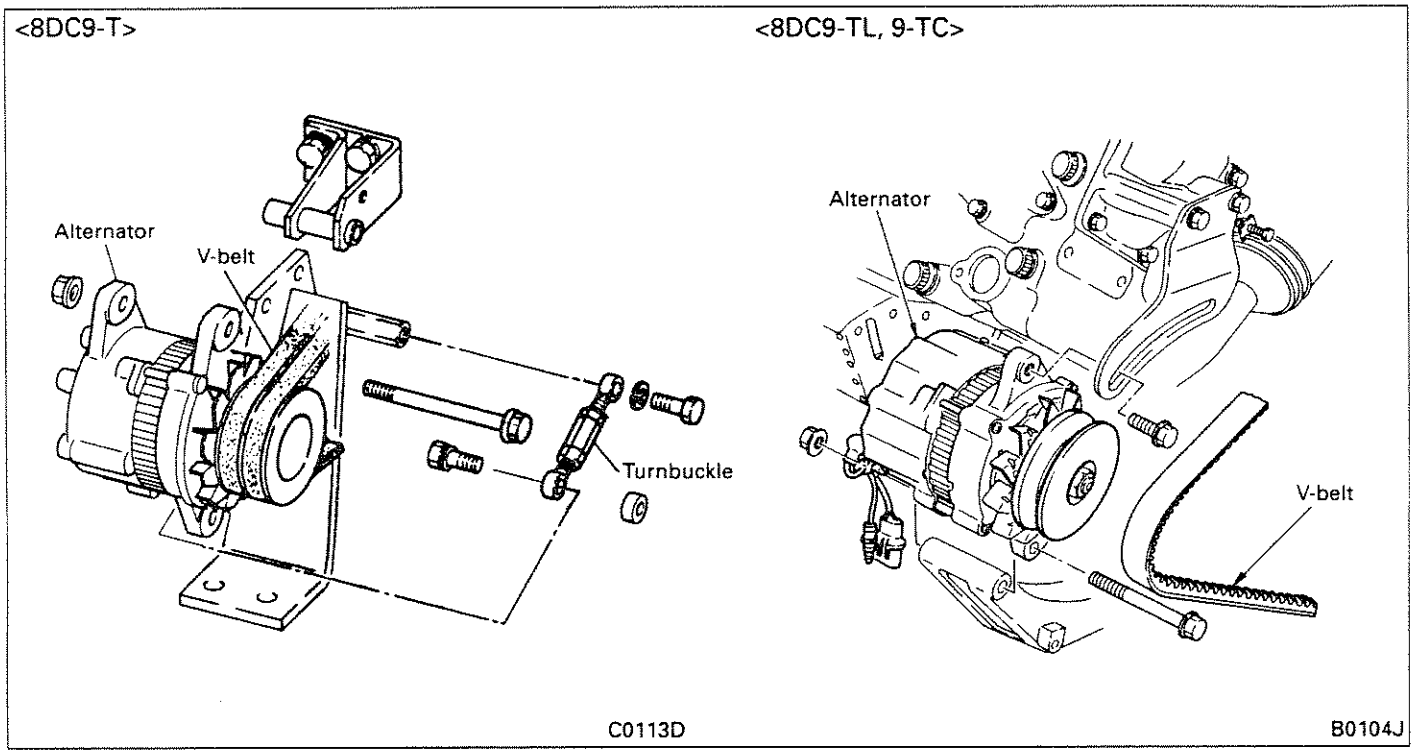

After installation, adjust the V-belt tension by referring to Section 5.10 of Group 14 Cooling.

5.3.2 Disassembly

<30 A, 40 A, 80 A Alternators>

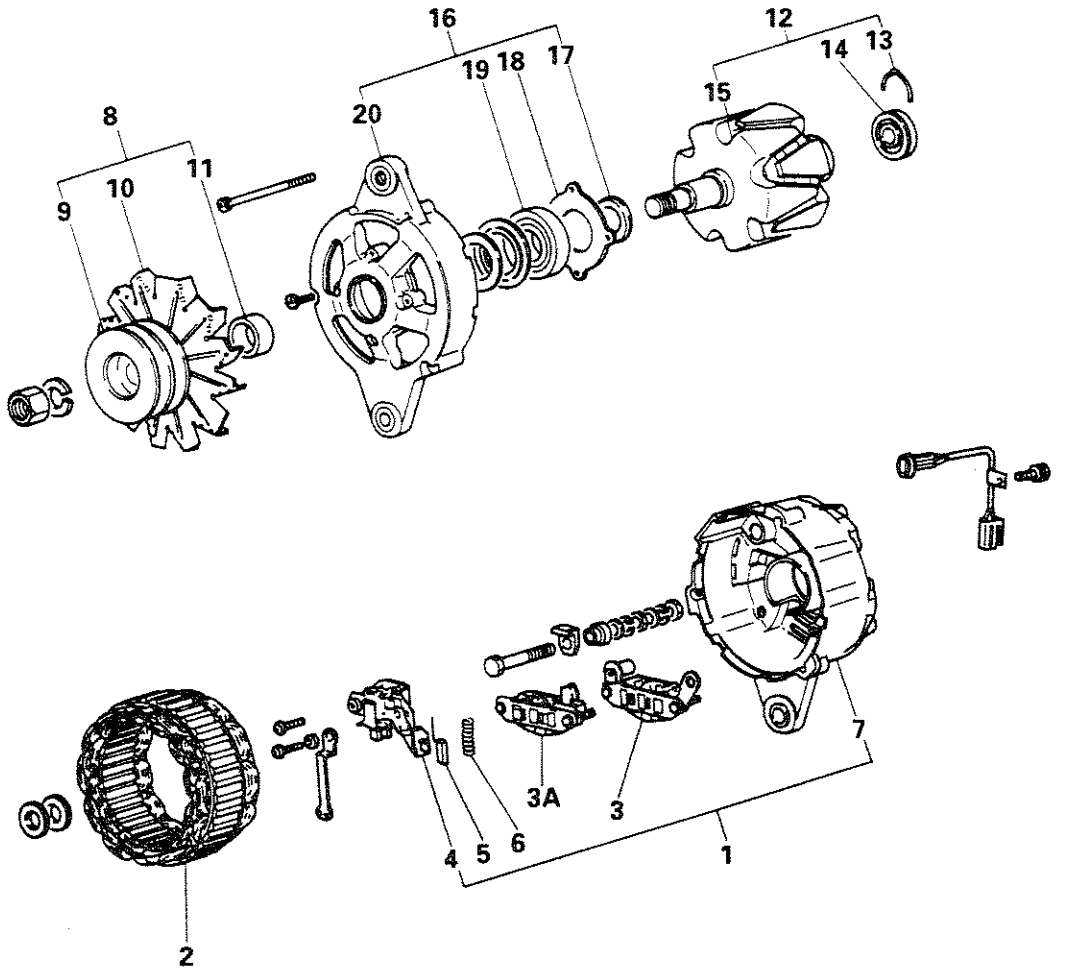

Disassembly sequence

① Rear bracket assembly
② Stator
3 Rectifier
③A Rectifier <80A>
4 Regulator
5 Brush
6 Brush spring
7 Rear bracket
8 Pulley and fan
⑨ Pulley
⑩ Fan
11 Spacer
12 Rotor assembly
13 Spring
*14 Rear bearing
⑮ Rotor
⑯ Front bracket assembly
17 Cover
18 Cover
*19 Front bearing
⑳ Front bracket

Parts marked with * should not be removed unless defects are evident.
For parts with an encircled number, refer to Disassembly Procedure that follows.

<35 A Alternator>

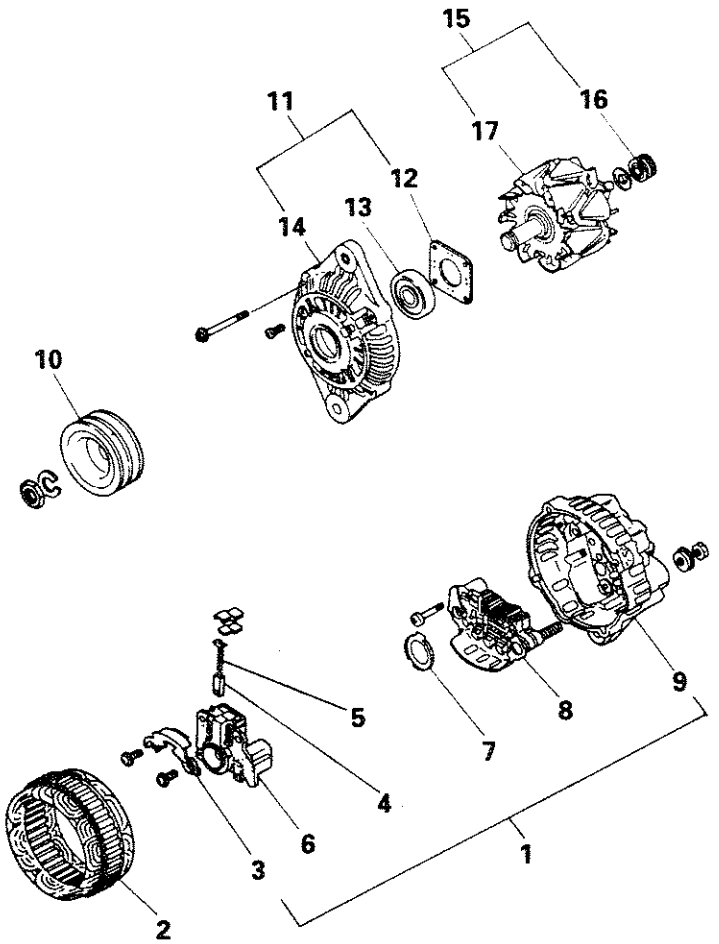

B6000A

Disassembly sequence

① Rear bracket assembly
② Stator
3 Plate
4 Brush
5 Brush spring
6 Regulator and brush holder
7 Sringa
8 Rectifier
⑨ Rear bracket
⑩ Pulley
11 Front bracket assembly
12 Cover
*13 Front bearing
⑭ Front bracket
15 Rotor assembly
*16 Rear bearing
⑰ Rotor

Parts marked with * should not be removed unless defects are evident.
For parts with an encircled number, refer to Disassembly Procedure that follows.

Disassembly Procedure

The inspection procedure is almost the same for all alternators. For clarity, the instructions in this section are written for 30A alternators, and extra notes are provided for other models where necessary.

(1) Separation of front bracket assembly from rear bracket assembly

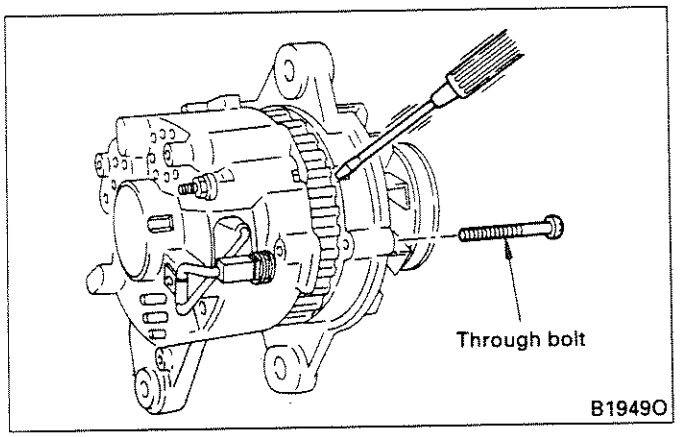

Remove the through bolt and, using a screwdriver, pry off the front bracket assembly from the rear bracket assembly.

NOTE:

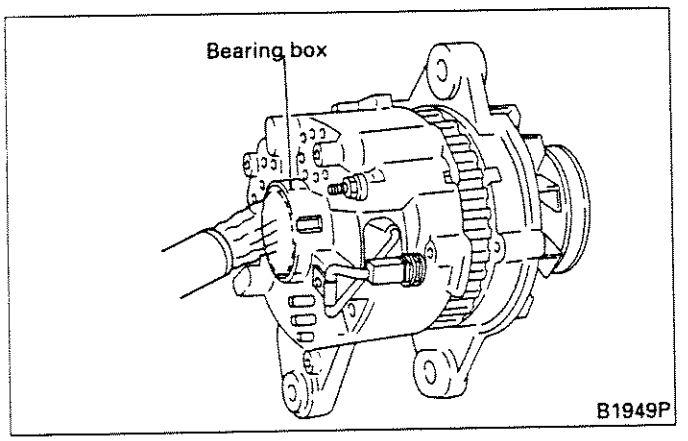

1. **The rear bearing is tightly fitted. Before separation, therefore, preheat the bearing box of the rear bracket by an air dryer to facilitate separation.**

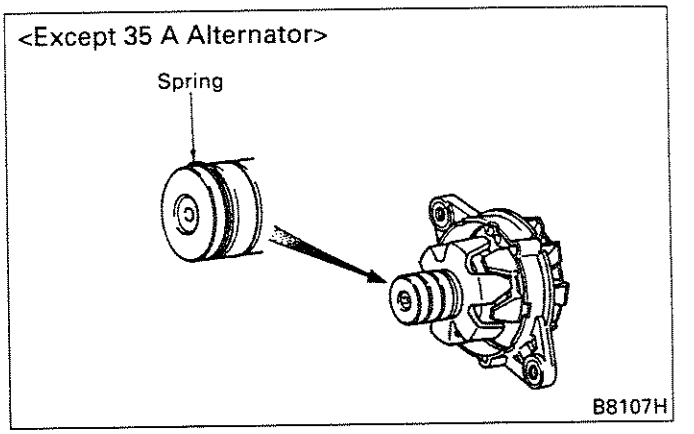

2. **At time of separation, use care not to lose the spring fitted to the outside of the rear bearing.**

(2) Removal of pulley

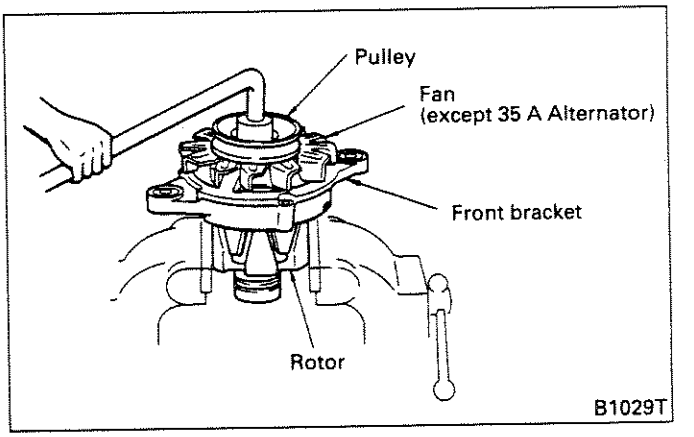

Hold the rotor in a vice, etc. and remove the pulley, fan and front bracket.

NOTE:

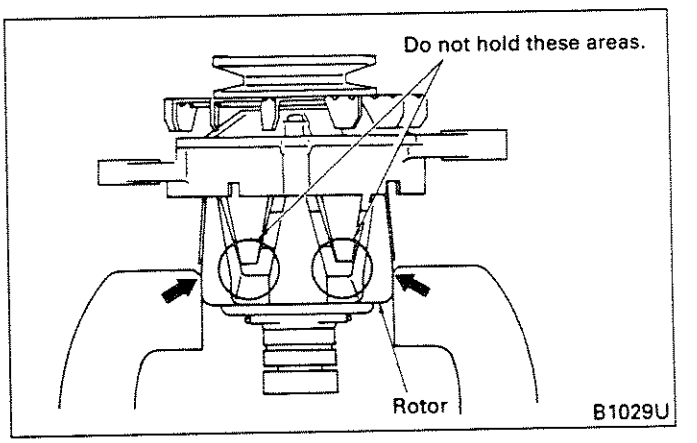

When holding the rotor in a vice, be sure to hold at illustrated portion.

(3) Removal of stator coil

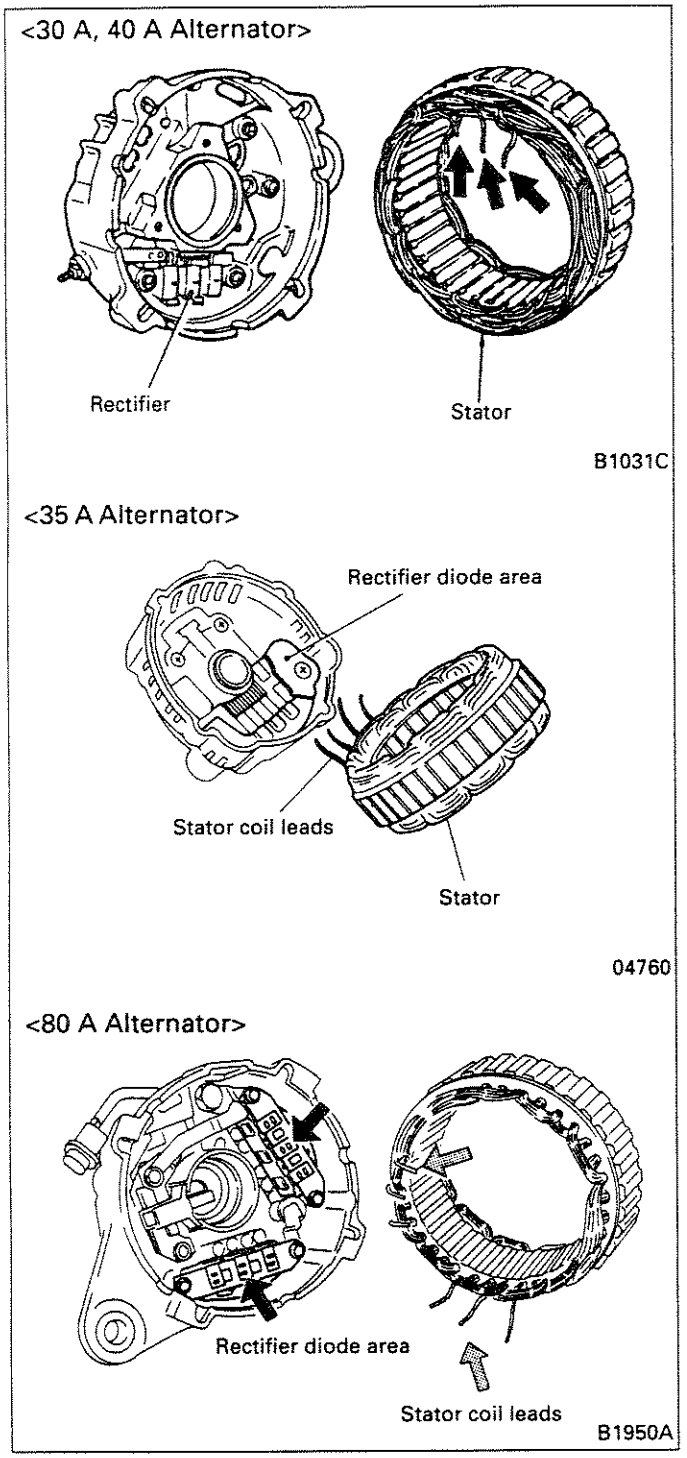

To remove the stator coil, unsolder the stator coil leads soldered to the rectifier.

NOTE:
When unsoldering, finish it in a short time (less than 5 seconds) with a soldering iron.

(4) Separation of rectifier

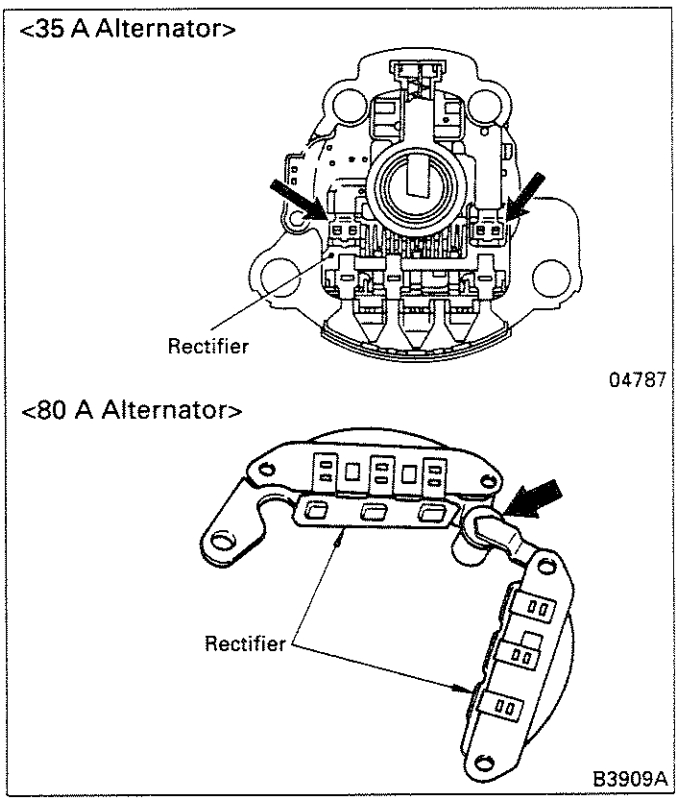

Separate the rectifier by unsoldering the area shown.

NOTE:
When unsoldering, finish it in a short time (less than 5 seconds) with a soldering iron.

5.3.3 Inspection

<30 A, 40 A, 80 A Alternator>

Item		NV	L
Field coil resistance	30 A, 40 A	Approx. 8.7 Ω	–
	80 A	Approx. 7.2 Ω	–
Slip ring O.D.		40.8 to 41.2	40.4
Ground test		–	–

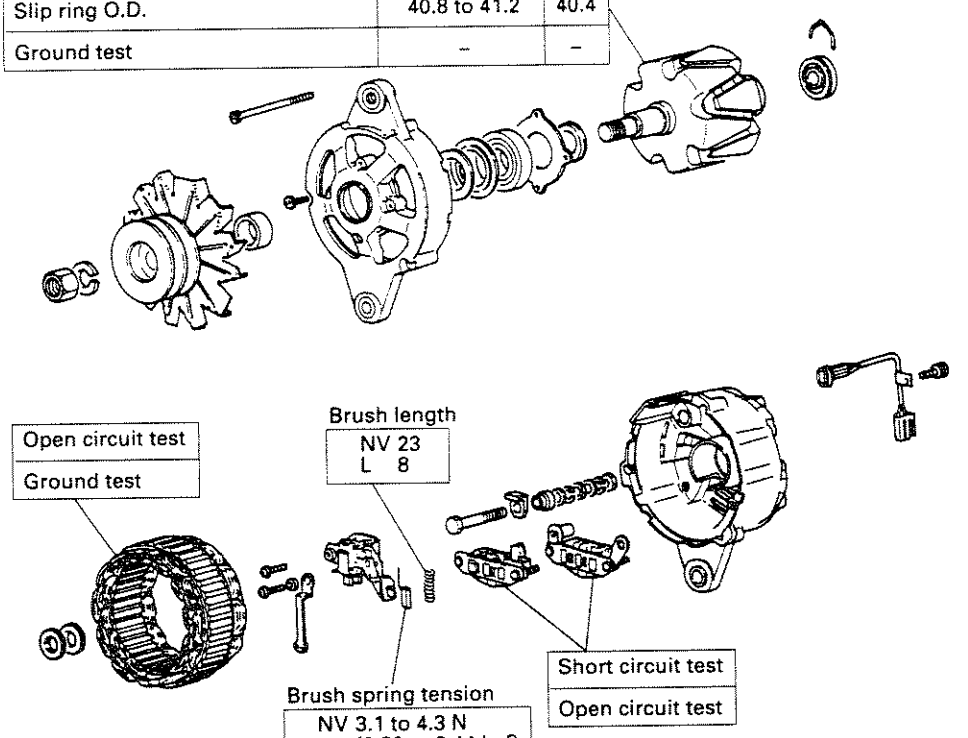

B3907F

NV .. Nominal Value
L..... Limit

<35 A Alternator>

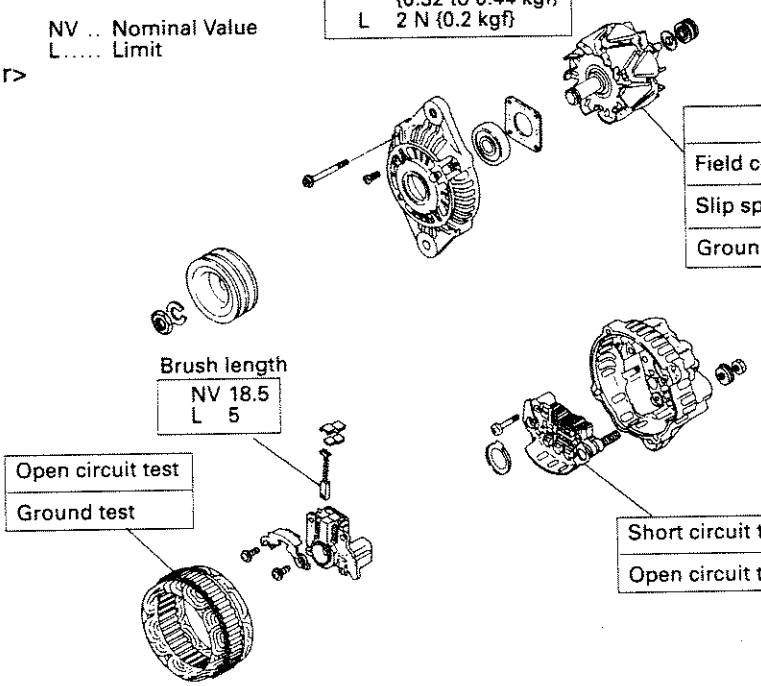

Item	NV	L
Field coil resistance	9 to 10.4 Ω	–
Slip spring O.D.	33	32.4
Ground test	–	–

B6000B

Inspection Procedure

The inspection procedure is almost the same for all alternators. For clarity, the instructions in this section are written for 30A alternators, and extra notes are provided for other models where necessary.

(1) Inspection of stator

(a) Continuity across leads

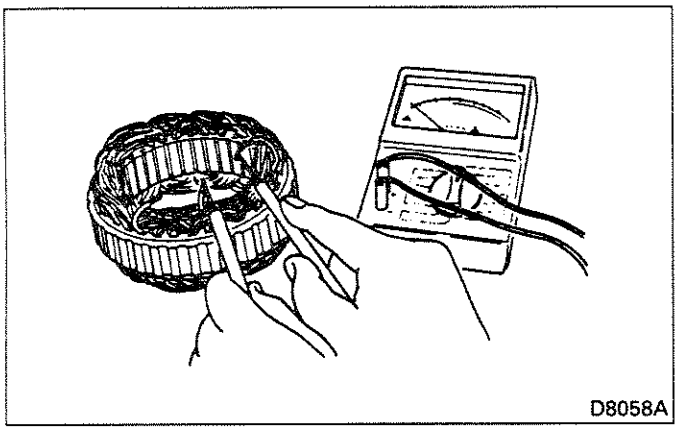
D8058A

Check that there is continuity across stator leads. If there is no continuity, indicating a broken wire, replace the stator.

(b) Continuity across stator leads and core

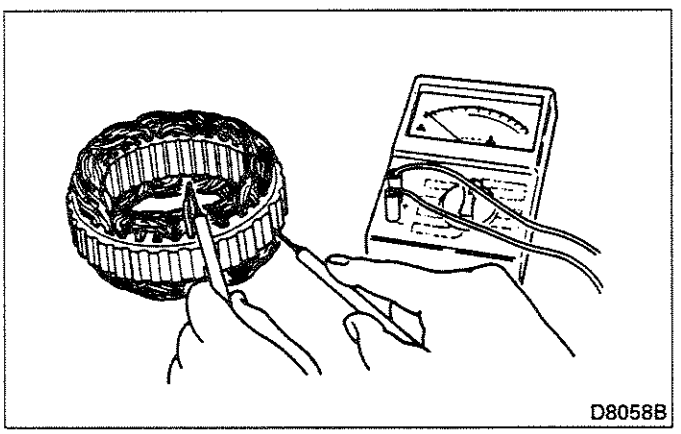
D8058B

Check that there is continuity across the stator leads and core.
If there is, replace the stator as it is grounded.

(2) Inspection of rotor

(a) Continuity between slip ring and core

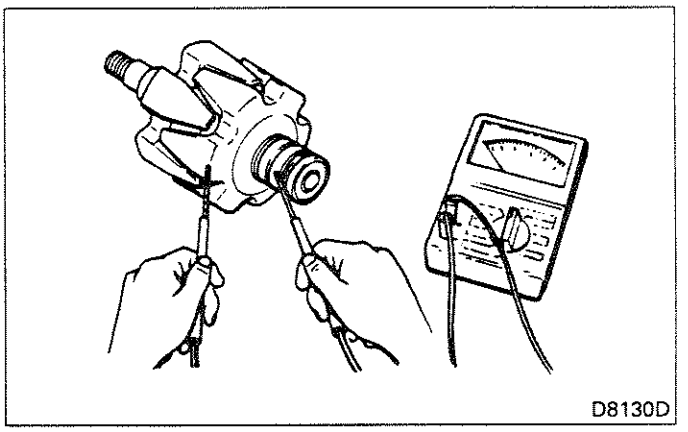
D8130D

Check that there is no continuity between the slip ring and core.
If there is, replace the rotor as it is grounded.

(b) Field coil resistance

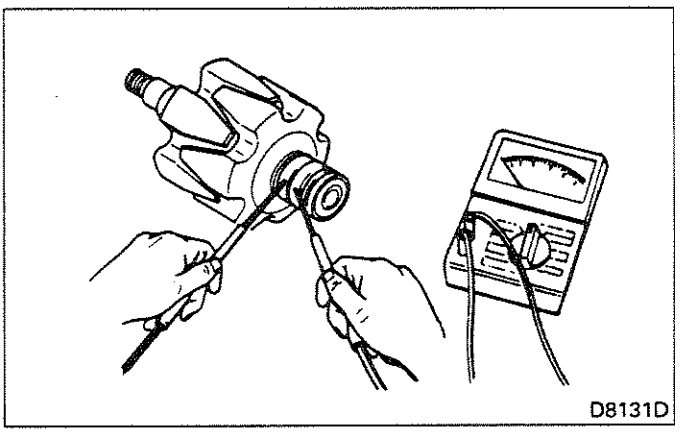
D8131D

Measure the resistance across slip rings. Replace the rotor if the resistance is not within the specification.

(c) Slip ring O.D.

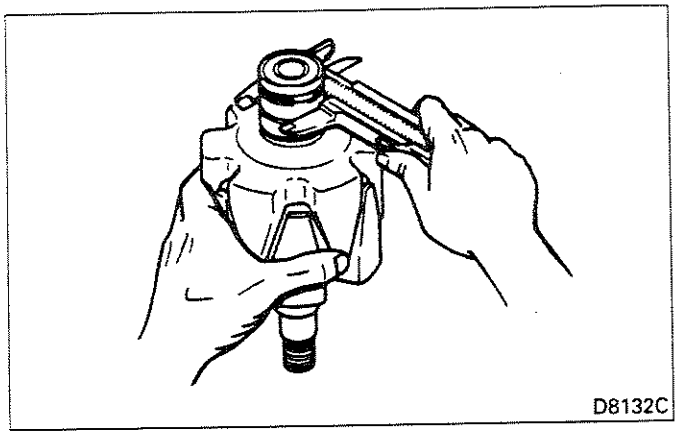

Measure the slip ring O.D. If the slip ring has rough surface or is unevenly worn, correct with sandpaper or lathe.
Correction must be made within the limit of slip ring O.D.

(3) Inspection of brush and brush spring

(a) Inspection of brush

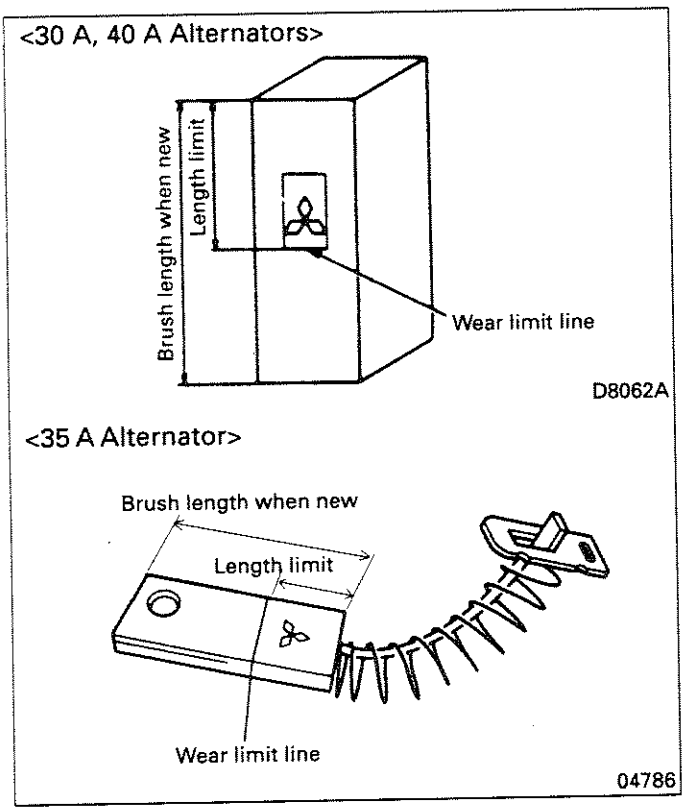

Replace the brush if it is worn beyond the limit.

(b) Inspection of brush spring

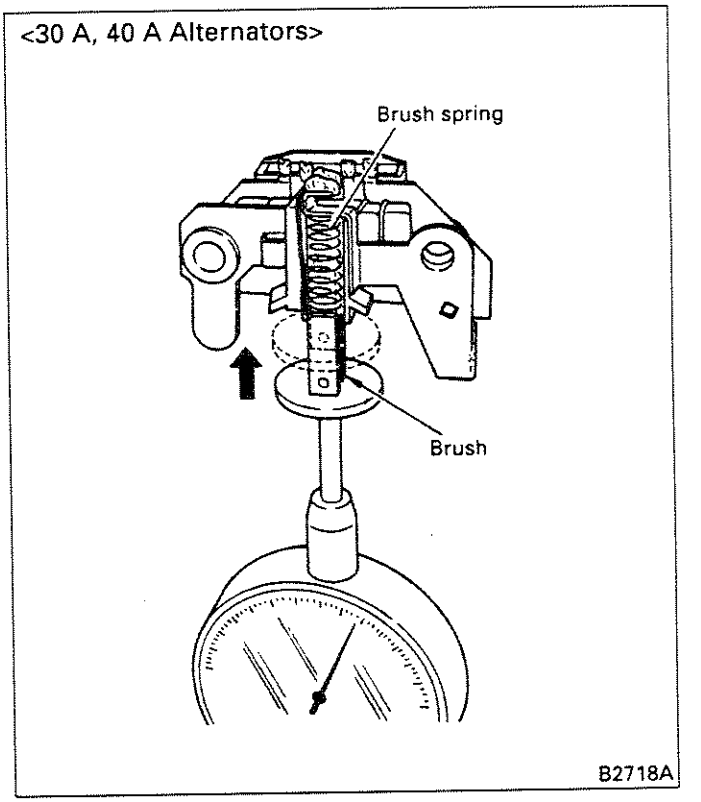

If the spring pressure is lower than the limit, replace.

(c) Replacement of brush and brush spring

<30 A, 40 A, 80 A Alternator>

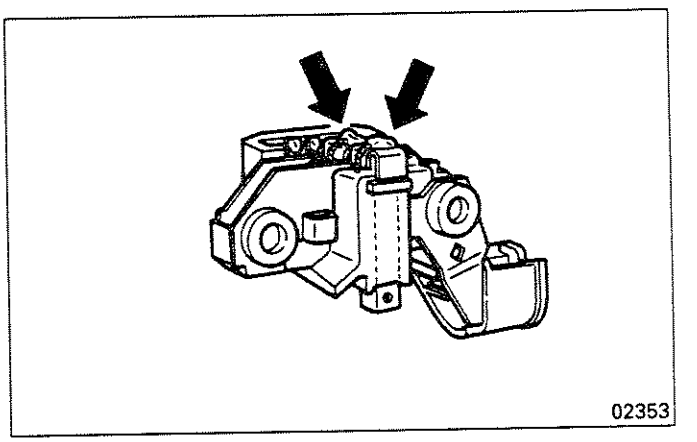

- Unsolder the position shown in the illustration and remove the brush and brush spring.

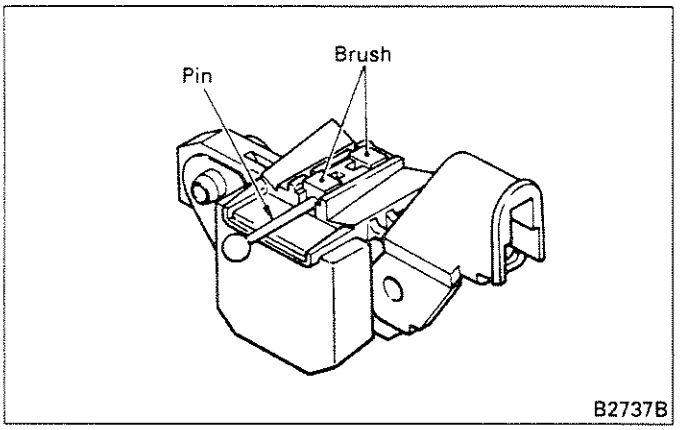

- When soldering the brush, insert a pin into the brush hole and fix to the regulator assembly.

NOTE:
When soldering or unsoldering, work quickly (within about 5 seconds) with a soldering iron.

<35 A Alternator>

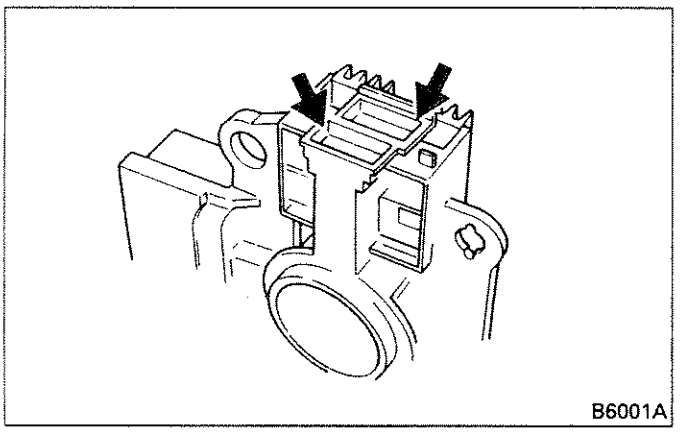

- Unsolder the parts of the regulator and brush assembly shown in the illustration. Then, withdraw the brush and brush spring.

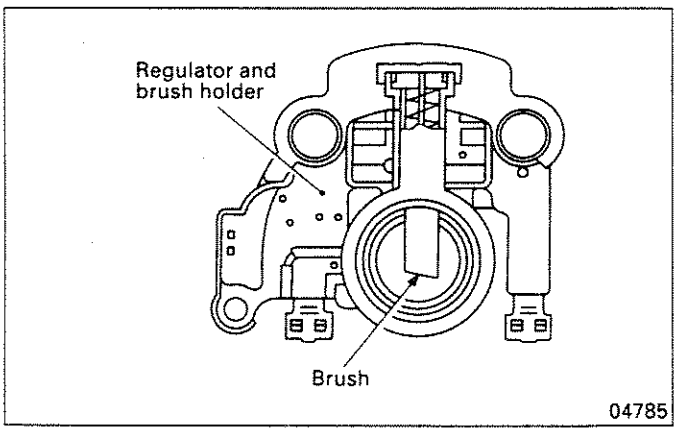

- Insert the brush into the regulator and brush holder, making sure it faces in the direction shown. Then, resolder the unsoldered points.

NOTE:
Be sure to use a soldering iron to remove and replace the solder. Apply the soldering iron for as short a time as possible (within 5 seconds).

(4) Inspection of rectifier

Measure resistance of each diode. Measure both when with the circuit tester (+) probe applied to the diode and when with the (–) probe applied to the diode.

- If resistance is infinite in both cases, the diode is open.
- If resistance is close to zero in both cases, the diode is shorted.

In the case of open or shorted diode, replace the rectifier.

Measure according to the following procedures.

(a) Measurement of diode mounted to heat sink

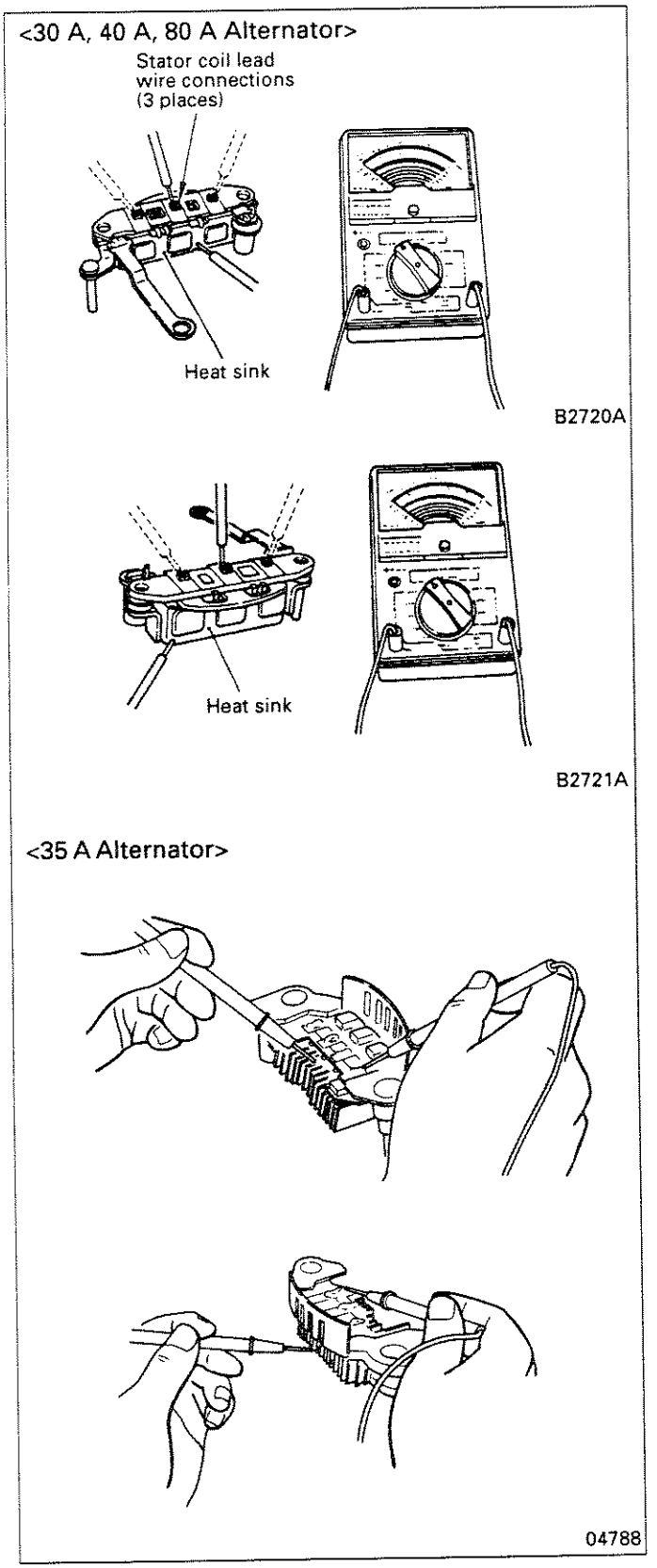

Measure between the heat sink and stator coil lead connections.

(b) Measurement of diode trio (3 places)

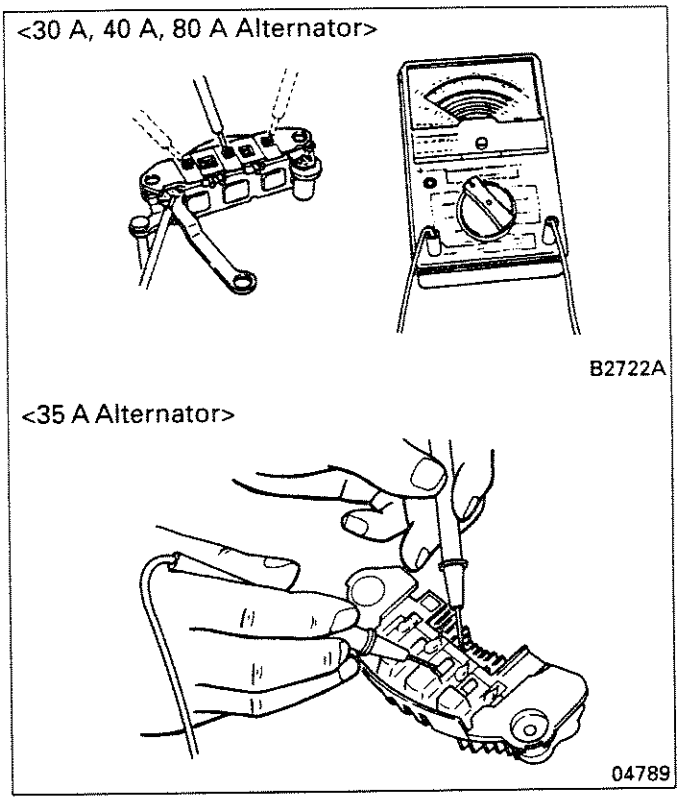

Measure between the plate connecting to the regulator and the stator coil lead connections.

(5) Inspection of bearings

Replace the bearing if defect is evident.

(a) Replacement of front bearing

(Removal)

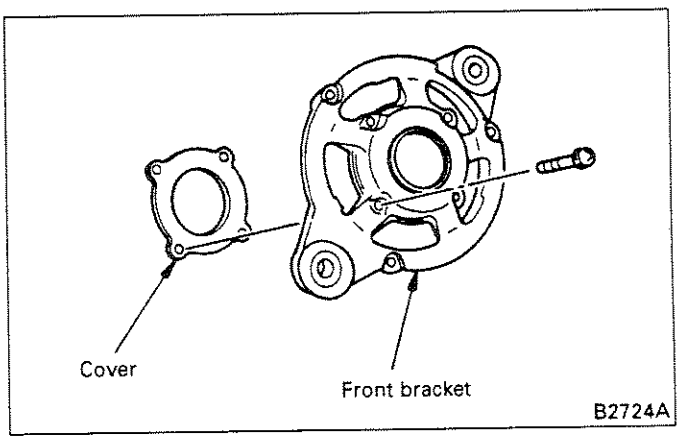

1) Remove the bearing cover.

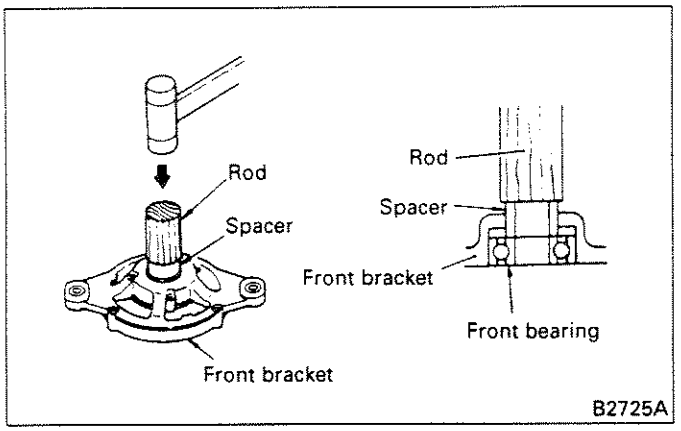

2) Apply a rod to the spacer on the front side of the front bracket and strike out the bearing.

(Installation)

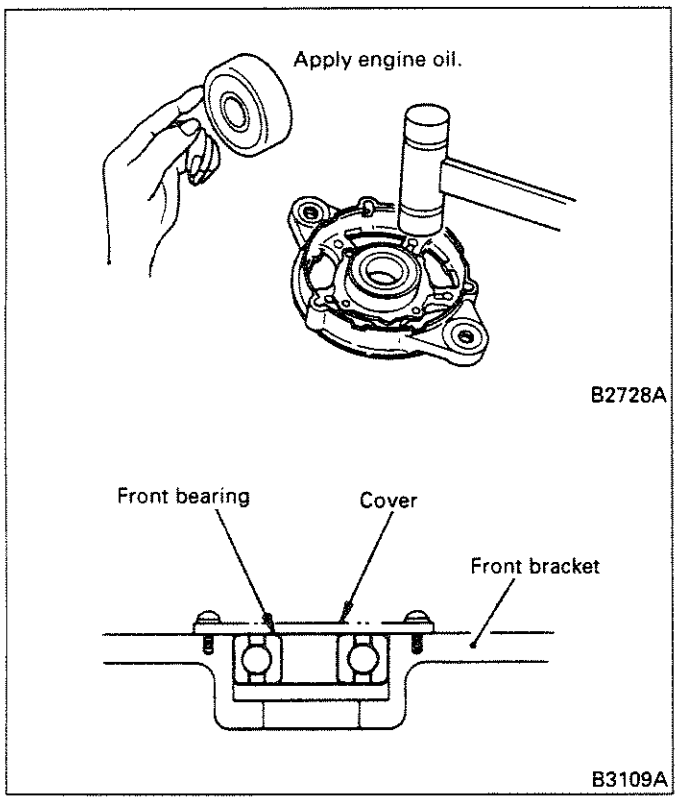

1) Apply a light coat of engine oil to the outside of the bearing and install to the inside of the front bracket using a press.
Install flush with the cover mounting portion.

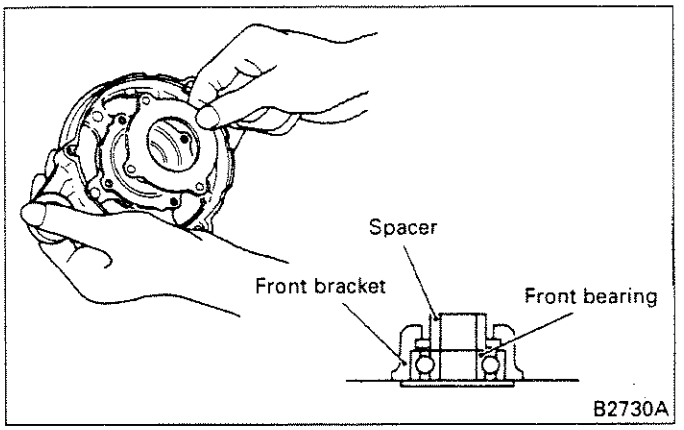

2) Install the cover and strike the spacer with a soft hammer, etc. to make sure that the bearing and cover are in contact with each other. If not, strike the spacer to bring them into contact.

(b) Replacement of rear bearings

(Removal)

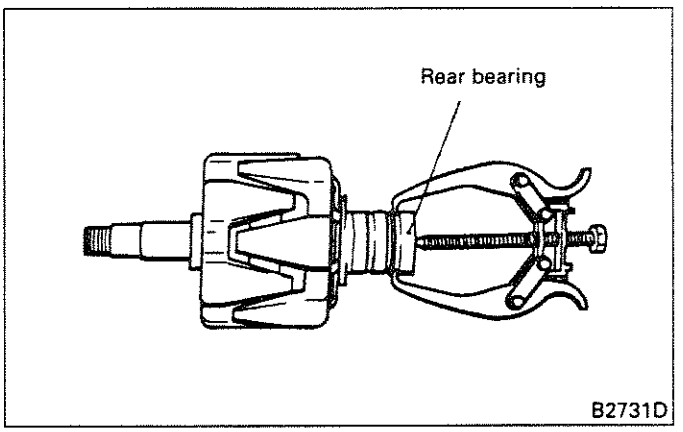

NOTE:
Use care not to cause damage to the slip ring by the bearing puller.

(Installation)

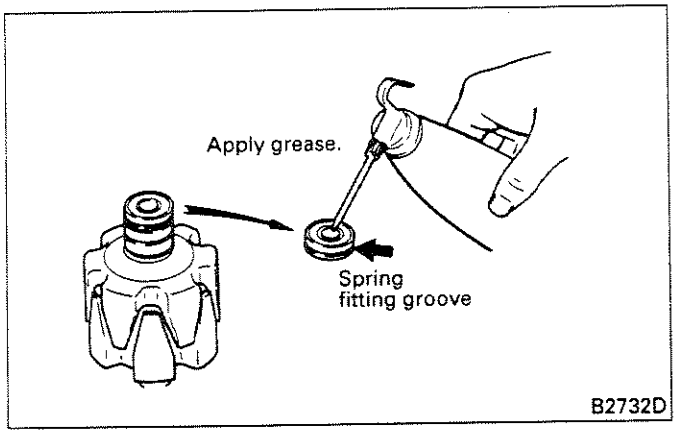

Apply a light coat of engine oil to the inside of the bearing and using a press, install with the spring fitting groove of the bearing facing the rotor field coil side.

5.3.4 Reassembly

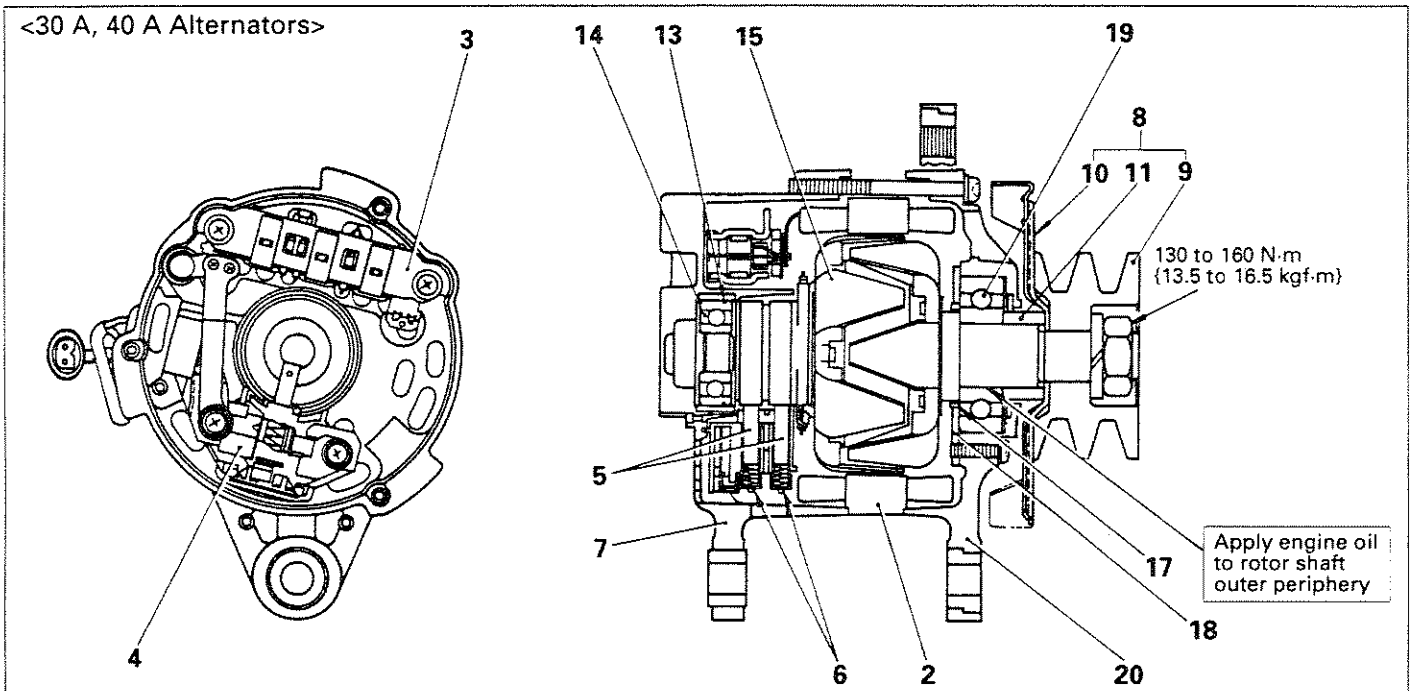

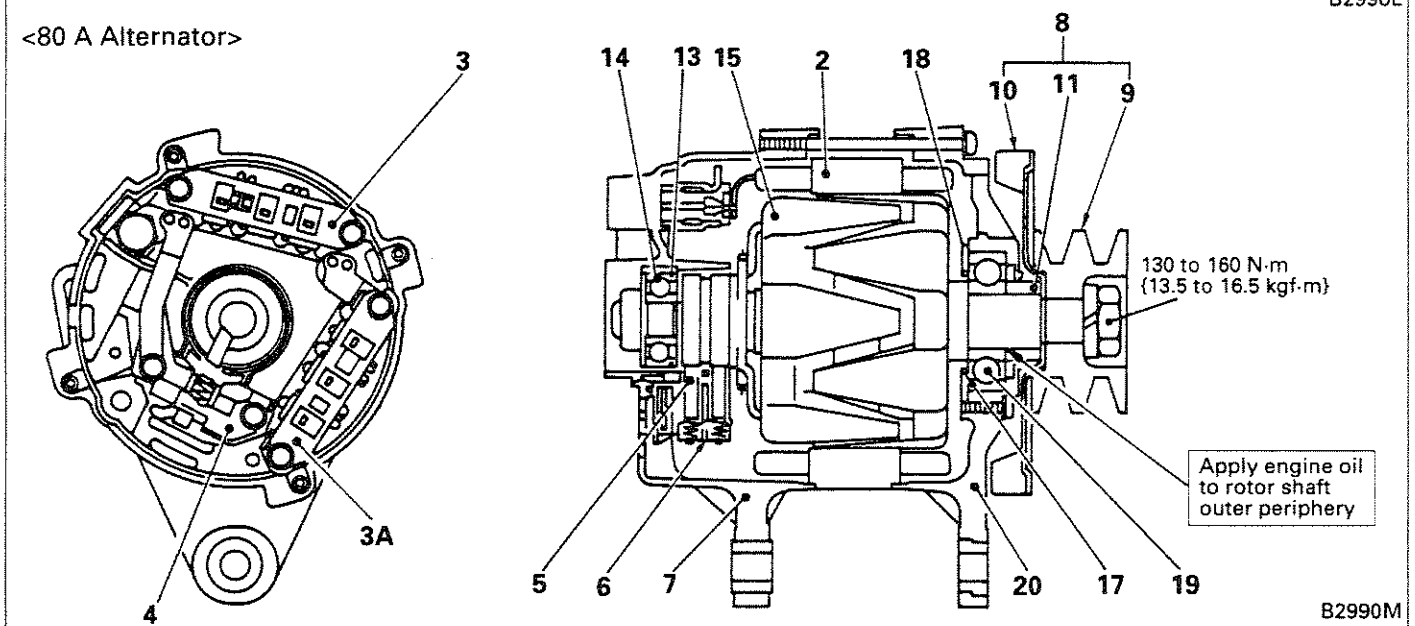

Components

1: 3, 3A <80A only>, 4, 5, 6, 7
12: 13, 14, 15
16: 17, 18, 19, 20

Reassembly sequence

16 (20 → 11 → 19→18→17)→12 (15→14→⑬)→8 (10→9)→2→①(7→④→6→5→③→③A<80Aonly>)

For parts with an encircled number, refer to Reassembly Procedure that follows.

<35 A>

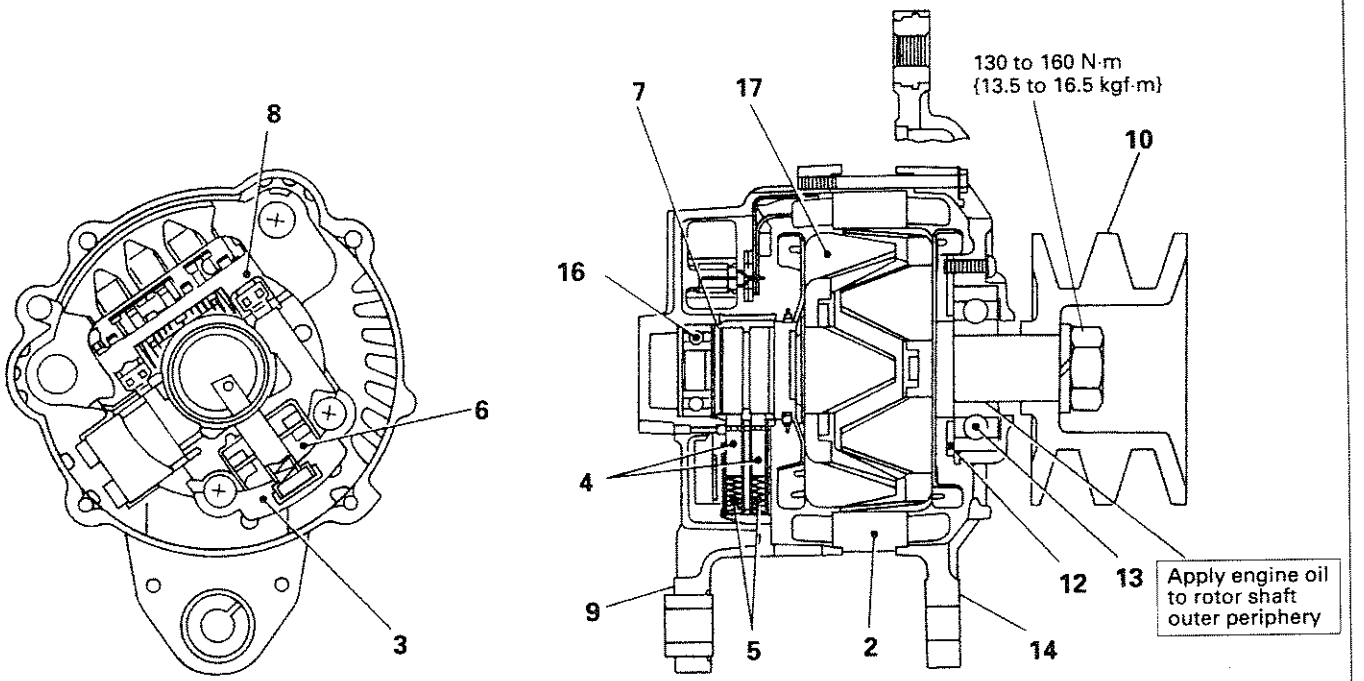

Components

1: 3, 4, 5, 6, 7, 8, 9

11: 12, 13, 14

15 : 16, 17

Reassembly sequence

11 (14→13→12)→15 (17→16)→10→2→1 (9→7→6→5→4→8→3)

For parts with an encircled number, refer to Reassembly Procedure that follows.

B6002A

Reassembly Procedure

(1) Installation of rectifier <80 A alternator>

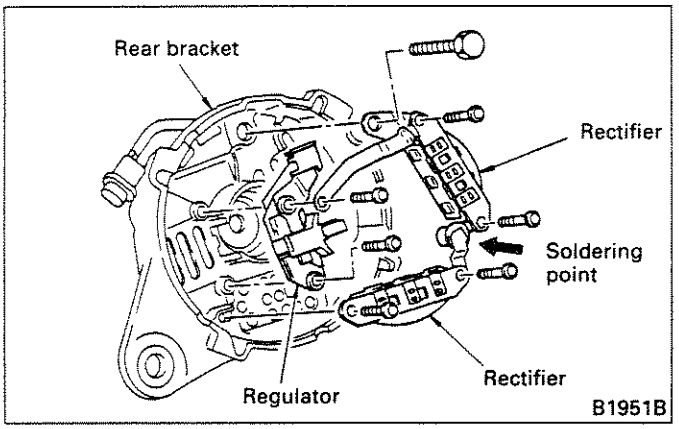

When the rectifiers are to be connected together by soldering, do the soldering with the regulator as well as the rectifiers mounted to the rear bracket.

NOTE:

When soldering, finish it in a short time (less than 5 seconds).

(2) Installation of spring (30 A, 40 A, 80 A Alternators)

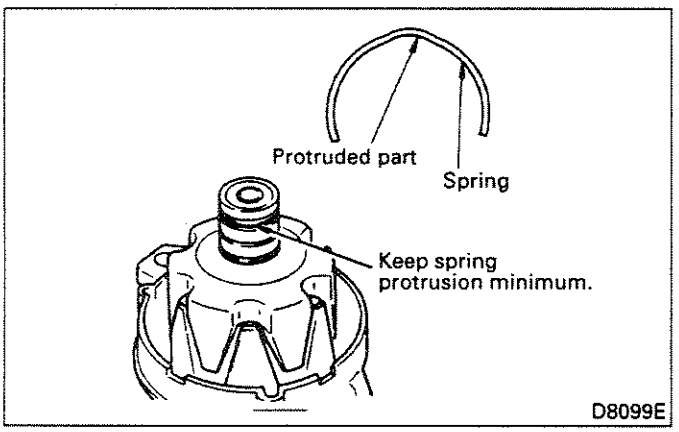

Install the spring with its highest point seated in the deepest of the spring fitting groove of the bearing.

(3) Installation of front bracket and rear bracket assembly

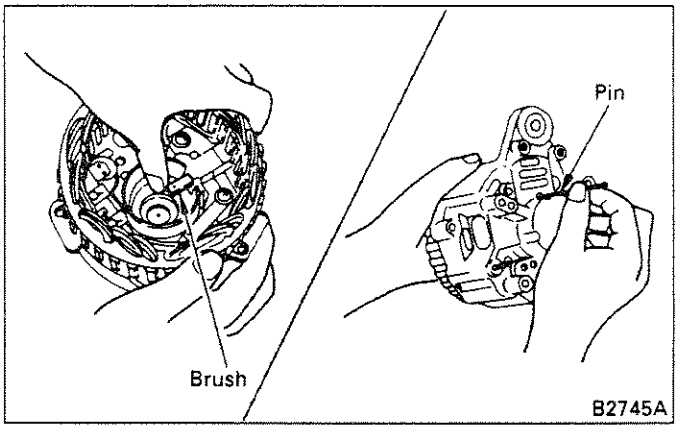

(a) Push in the brush by hand and insert the pin into the brush hole from the rear of the rear bracket to fix the brush.

(b) Keeping this condition, install the rear bracket assembly to the front bracket assembly.

NOTE:

After completion of reassembly, be sure to remove the pin and close the hole.

5.3.5 Inspection and adjustment after installation

(1) Handling precautions

When servicing the alternator, observe the following precautions.

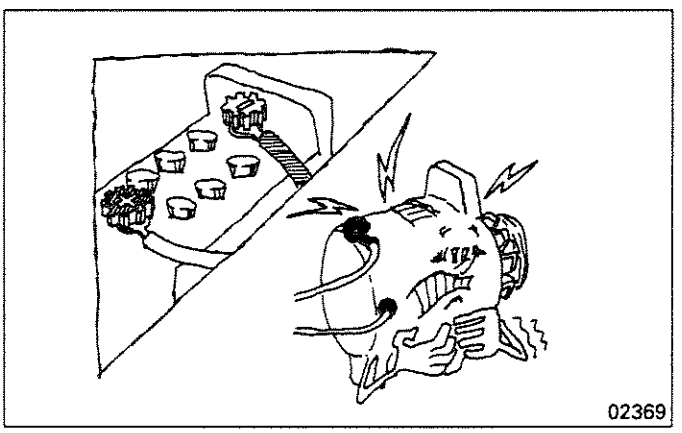

(a) Never connect the battery reversely.

If the polarity of the battery is reversed when connections are made, a large current flows from the battery to alternator, damaging the diode and IC regulator.

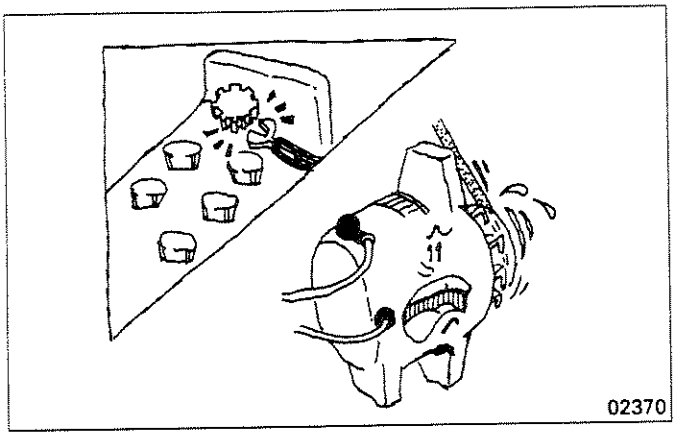

(b) Do not disconnect the battery terminal connections while the engine is running, or a surge voltage develops deteriorating the diode and regulator.

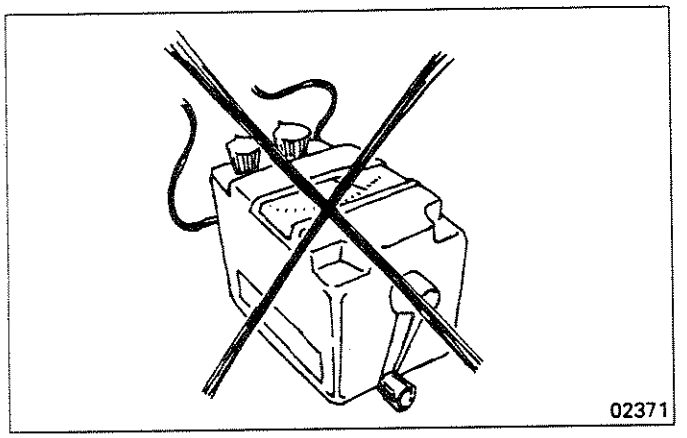

(c) Do not use a megger or other high-voltage multimeter, or damaged diode and regulator will result.

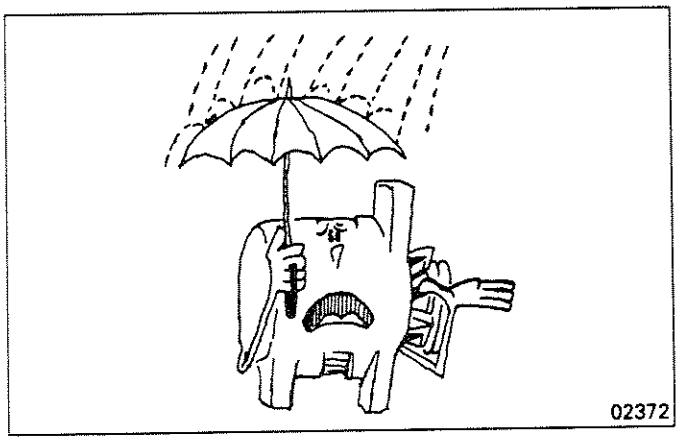

(d) Do not expose the alternator to the water. If the alternator is exposed to water, short circuit may result, causing damaged alternator.

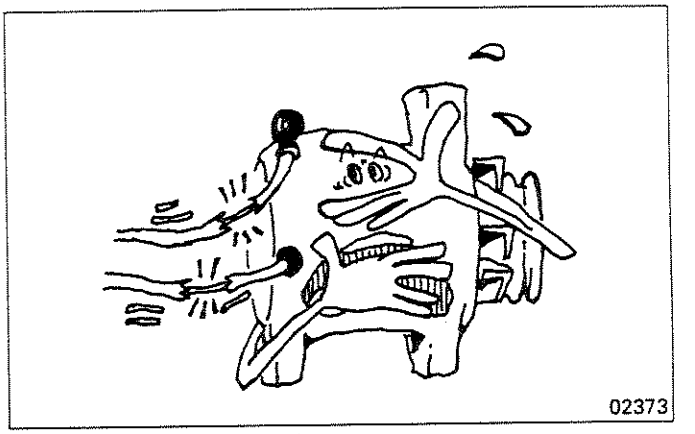

(e) Operating the alternator with its "B" and "L" terminals shorted results in the damaged diode trio.

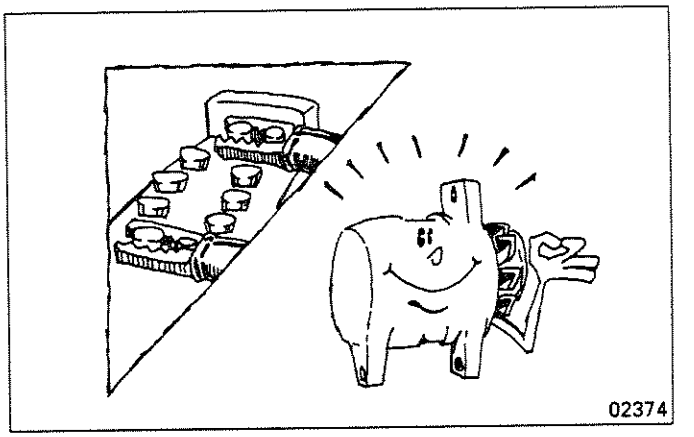

(f) When quick-charging the battery with a quick charger, be sure to disconnect terminal connections in advance. Otherwise, a damaged diode and regulator will result.

(2) Performance test

(a) Test bench inspection

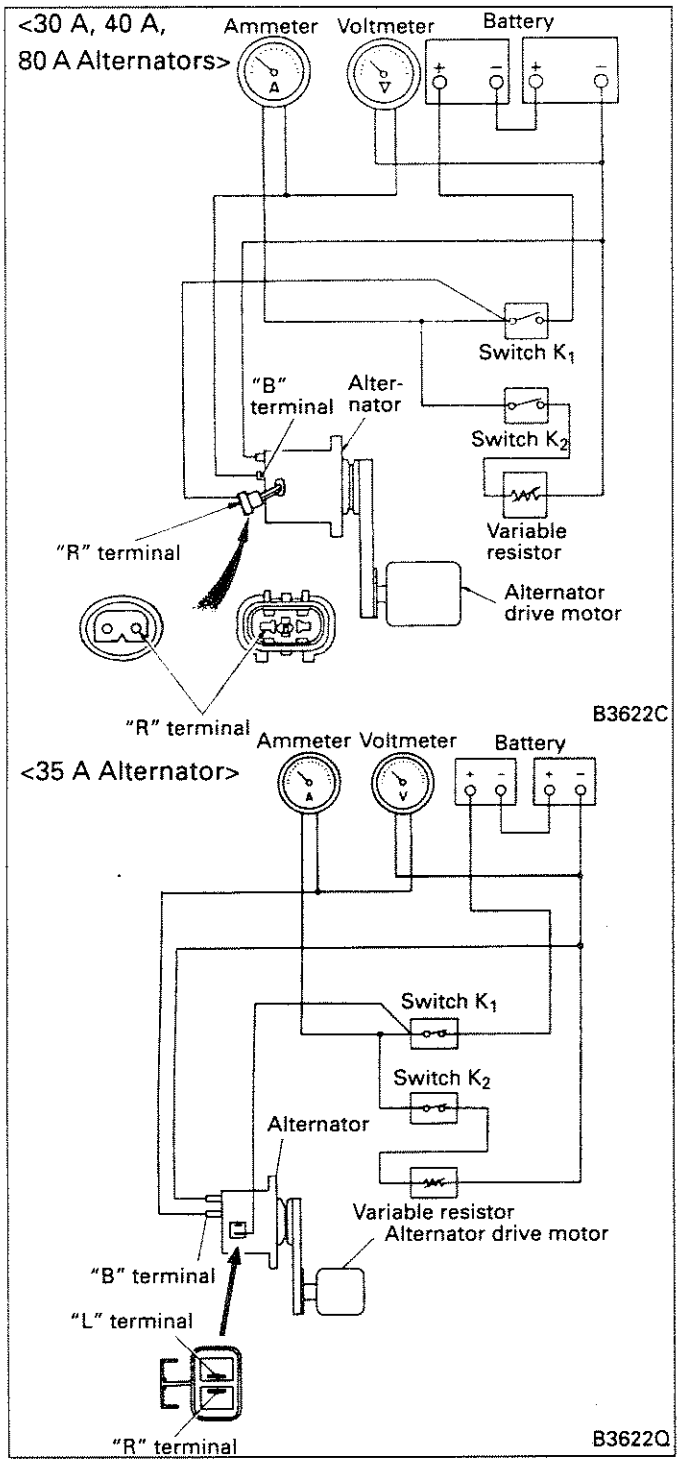

Perform the test using the circuit shown above.

- With the load resistance set at maximum (meaning that there is almost no load current flowing), close switches K_1 and K_2.
- While gradually increasing the alternator speed and reducing the load resistance, measure the current value with the specified terminal voltage and speed.
  If the measurement is below the specification, check alternator parts.

		Output current
30A alternator (when cold)	1,500 rpm, 27V	17A or more
	2,500 rpm, 27V	26A or more
35A alternator (when cold)	1,500 rpm, 27V	20A or more
	2,500 rpm, 27V	29A or more
40A alternator (when cold)	1,600 rpm, 27V	26A or more
	2,500 rpm, 27V	37A or more
80A alternator (when cold)	1,500 rpm, 27V	39A or more
	2,500 rpm, 27V	71A or more

(b) On-vehicle inspection

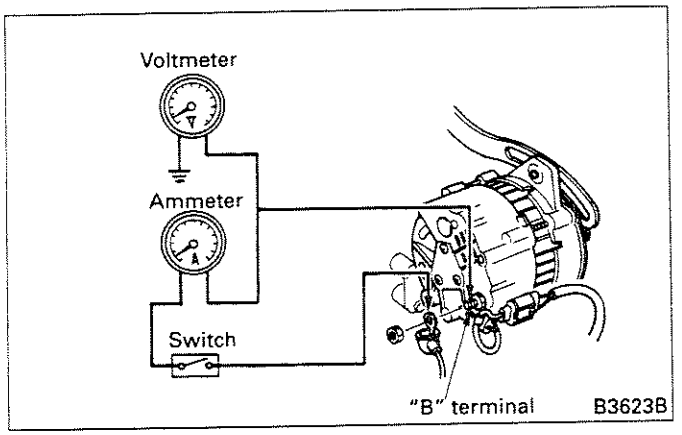

- Provide a switch between the battery and alternator "B" terminal. With the switch turned off, connect an ammeter (with 60 A full-scale to the 30 A or 40 A alternator and 100 A full-scale to the 35 A, 80 A alternator) and voltmeter.
- Turn on the switch and make sure that the voltmeter indicates the battery voltage.
- Start up the engine and immediately turn on all lamp switches. Then, increase the engine speed and read the maximum current value when the alternator speed reaches 5000 rpm.
- f the current reading is 70% or more of the nominal output, the alternator may be regarded as in good condition.

NOTE:
The on-vehicle test is an easier way of inspection; the test bench inspection is necessary for more accurate results.

(3) Inspection of regulator

(a) Test bench inspection

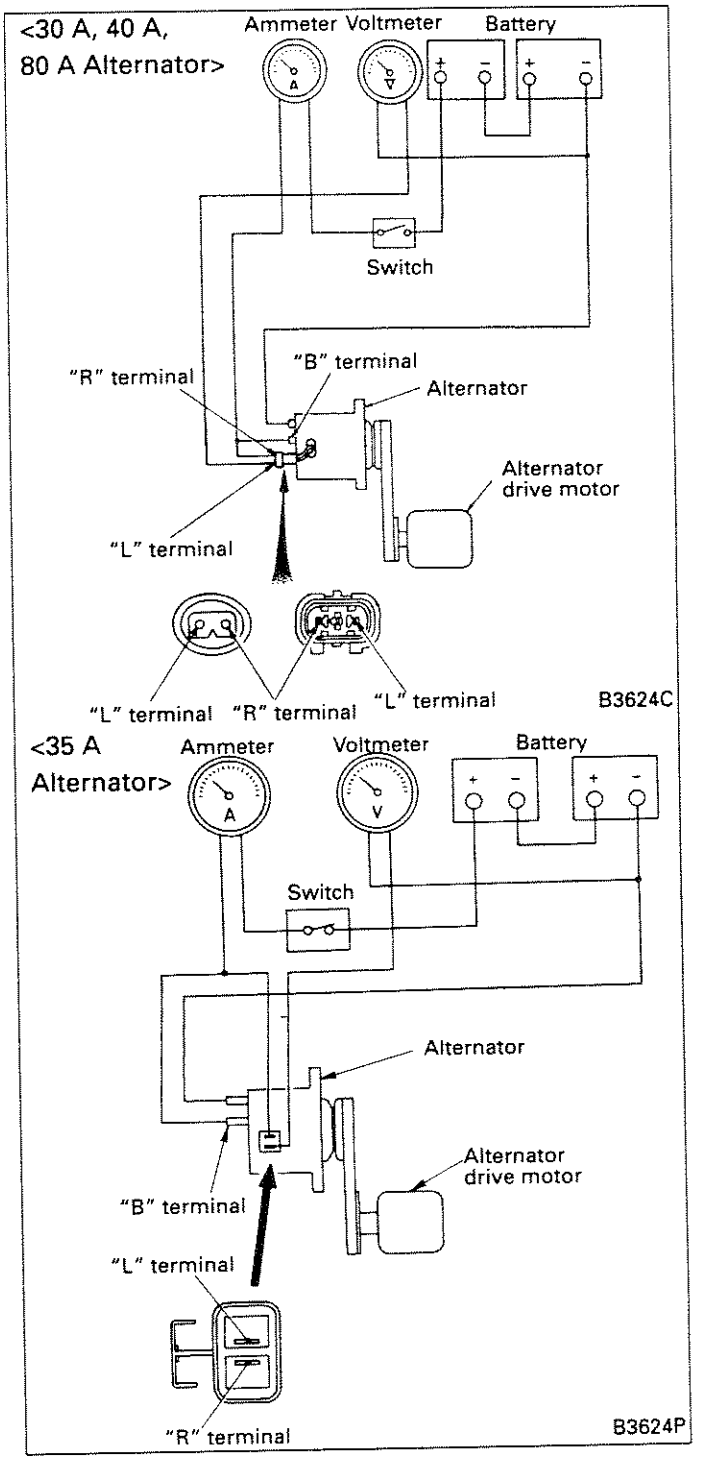

Inspect the regulator regulated voltage as follows using the circuit shown above.

- Use a fully-charged battery. Turn on the switch.
- Gradually increase the alternator speed up to 5000 rpm. Check that the current value at this speed is 5 A or less.

- The regulator is in good condition if the regulated voltage under this condition is within specification. If not, replace the regulator assembly.

Nominal value	28 to 29V

(b) On-vehicle inspection

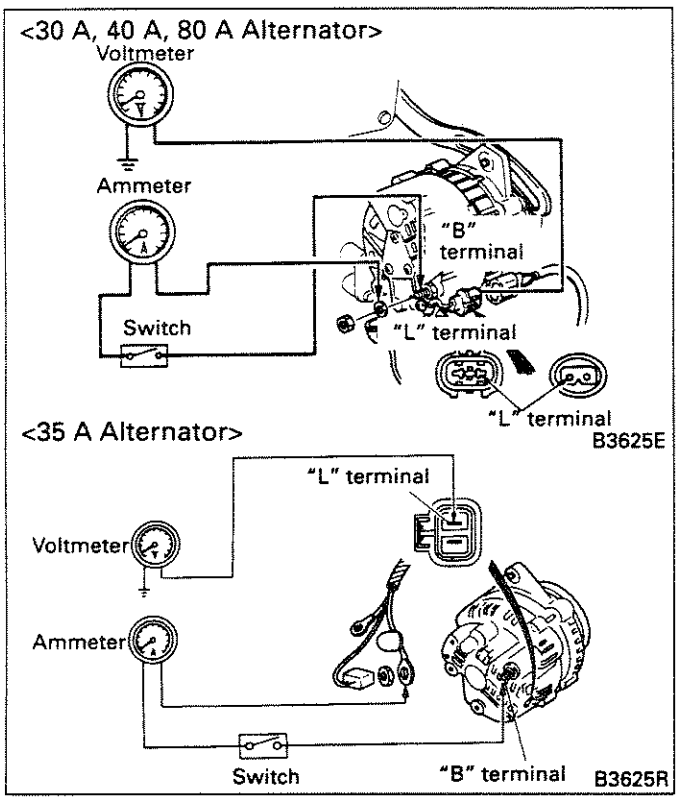

- Connect a voltmeter and ammeter and provide a switch as shown.
- The regulator is in good condition if the voltmeter registers 0 when the switch turns ON. If the voltmeter pointer deflects, the alternator or wiring is defective.
- With the ammeter terminal shorted to prevent flow of the starter current through it, start the engine.
- Increase the engine speed to around 2000 rpm and read the regulated voltage value if the charge current is 5 A or less. If the charge current is 5 A or more, continue charging for a while or replace the battery with a fully-charged one. Or 1/4 Ω (25 W) resistor may be connected in series to the battery to limit the charge current.
- If the measurement is out of specification, replace the regulator assembly.

5.4 40 A Alternator <A4T57471> (with brush type)

5.4.1 Removal and installation [Refer to Section 5.3.1.]

5.4.2 Disassembly and inspection

For disassembly procedure, refer to Section 5.3.2. For inspection procedure, refer to Section 5.3.3.

NV .. Nominal Value
L..... Limit

Item	NV	L
Brush length	23	8
Brush spring pressure	3.1 to 4.3 N {0.32 to 0.44 kgf}	2 N {0.2 kgf}

Item	NV	L
Slip ring O.D	40.8 to 41.2	40.4
Field coil resistance	10 Ω	–
Ground test		

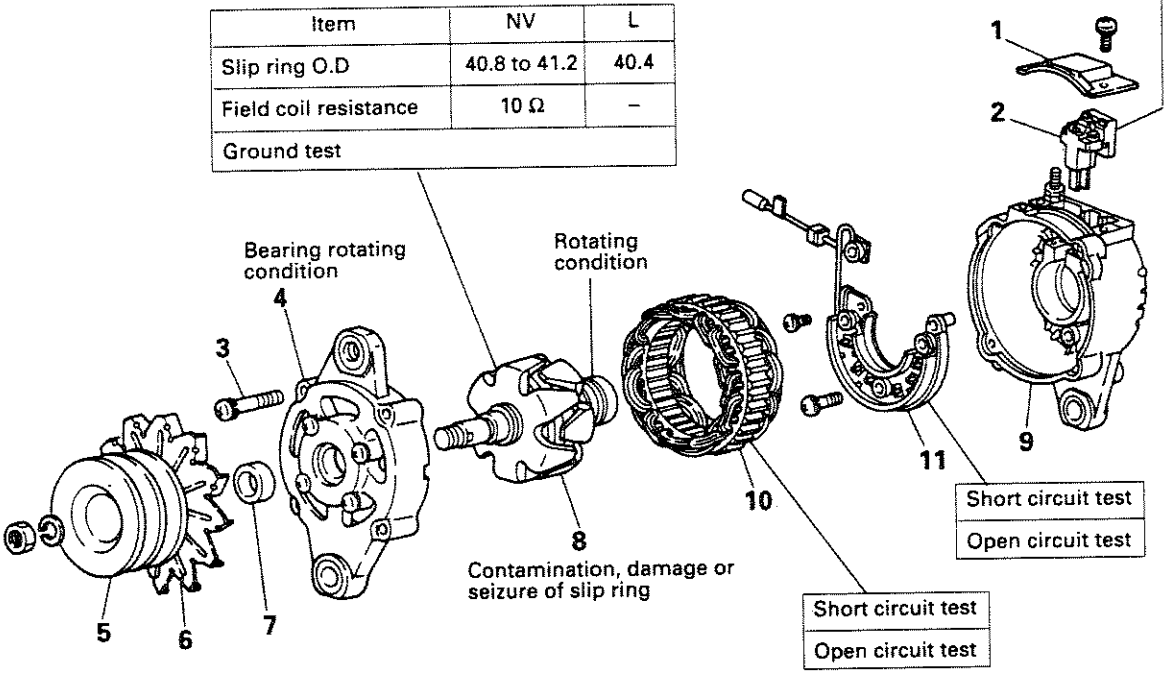

Disassembly sequence

1 Cover
2 Regulator assembly
3 Through bolt
4 Front bracket
5 Pulley
6 Fan
7 Spacer
8 Rotor
9 Rear bracket
10 Stator
11 Rectifier assembly

NOTE:
Do not pull out the rotor without removing the regulator assembly as this will damage the brushes in the regulator assembly.

5.4.3 Reassembly

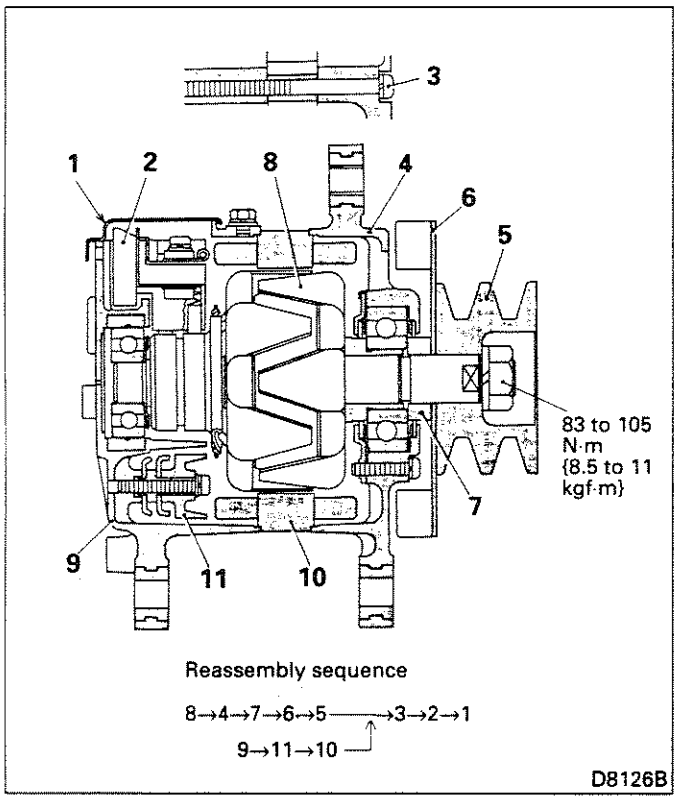

5.4.4 Testing

Refer to section 5.3.5 for information other than the circuit diagrams and nominal values given here.

(1) Performance test (bench inspection)

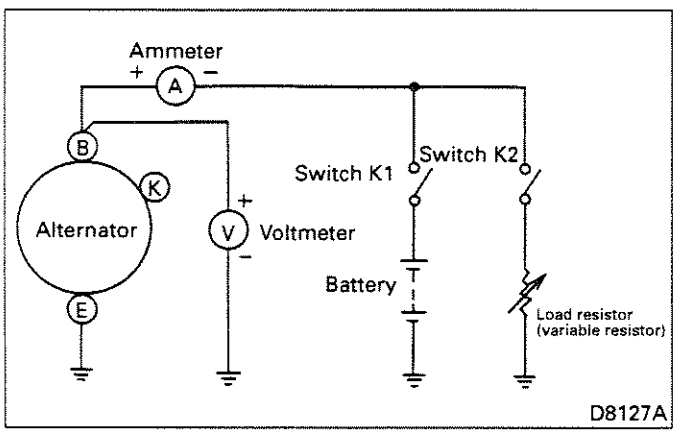

Nominal values

	Output current
1500 rmp, 27 V	26A or more
2500 rmp, 27 V	37A or more

(2) Regulator inspection

(a) Test bench inspection

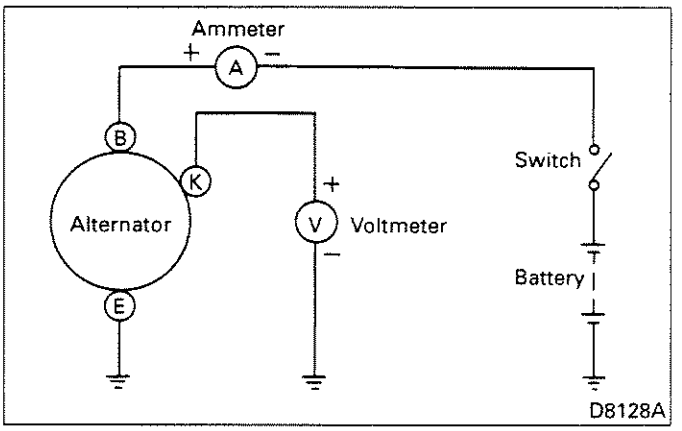

Regulated voltage

Nominal value	28 to 29V

(b) On-vehicle inspection

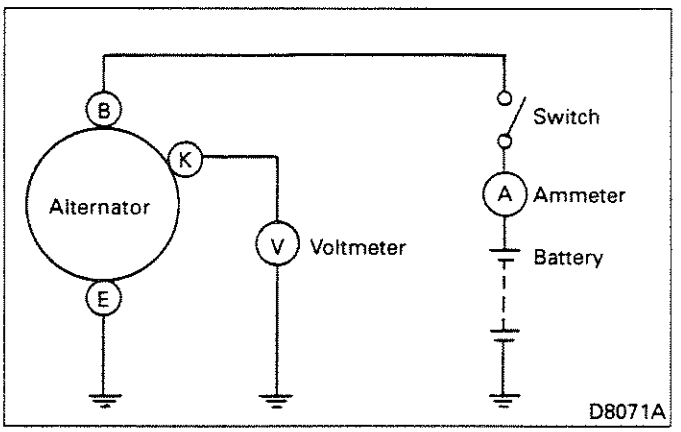

5.5 40 A, 50 A Alternators (brushless type)

5.5.1 Removal and installation

5.5.2 Disassembly

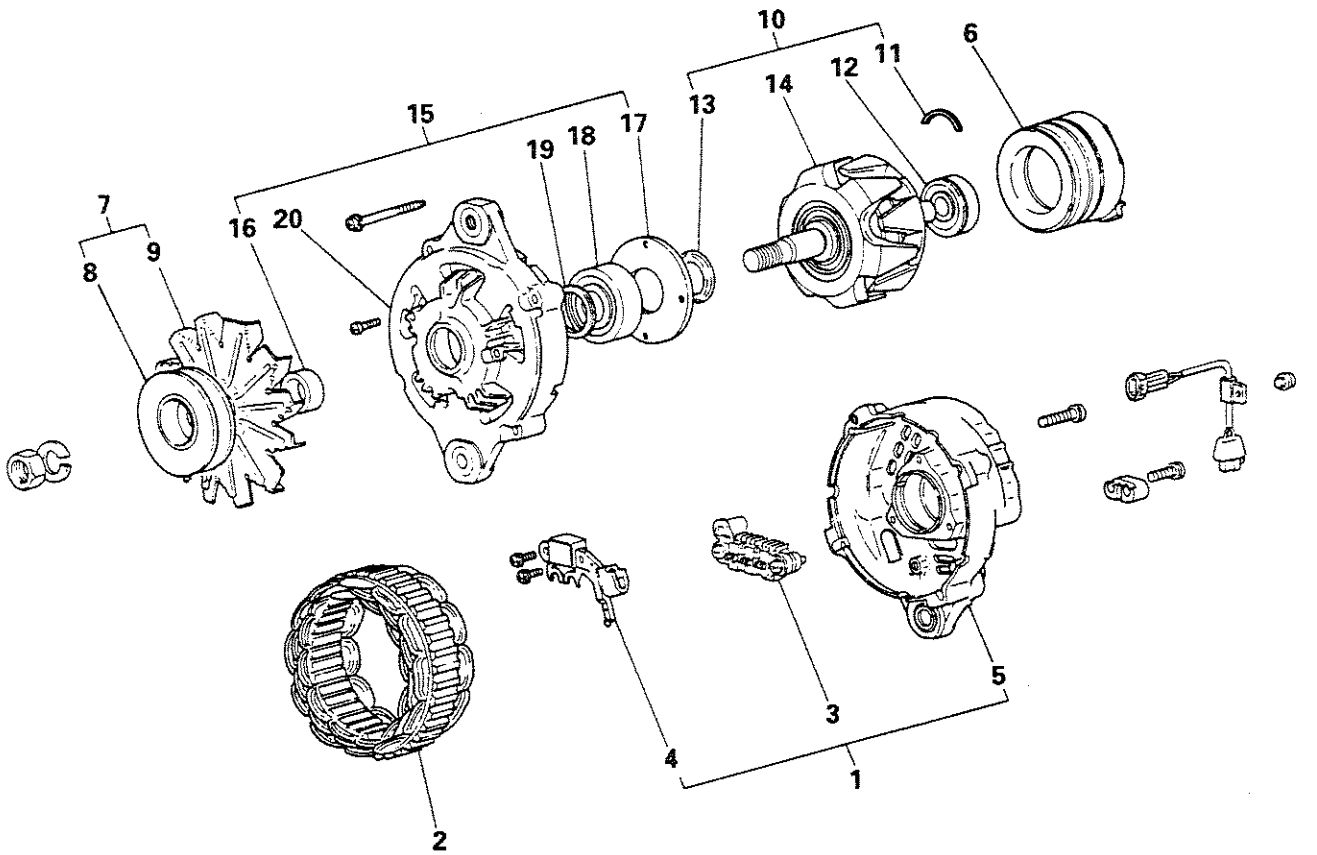

Disassembly sequence

① Rear bracket assembly
② Stator
③ Rectifier
④ Regulator
5 Rear bracket
6 Field coil
7 Pulley and fan
⑧ Pulley
⑨ Fan
10 Rotor assembly
11 Spring
*12 Rear bearing
13 Cover
⑭ Rotor
⑮ Front bracket assembly
16 Spacer
17 Cover
*18 Front bearing
19 Oil seal
⑳ Front bracket

Parts marked with * should not be removed unless defects are evident.
For parts with an encircled number, refer to Disassembly Procedure that follows.

Disassembly Procedure

(1) Separation of front bracket assembly from rear bracket assembly

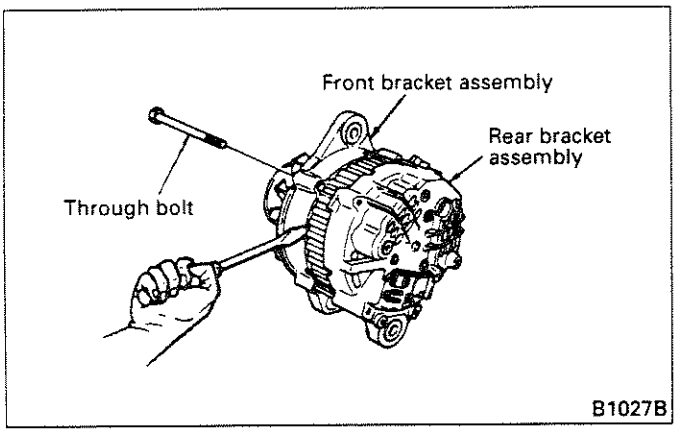

Remove the through bolt. Using a screwdriver, pry off the front bracket assembly from the rear bracket assembly.

NOTE:

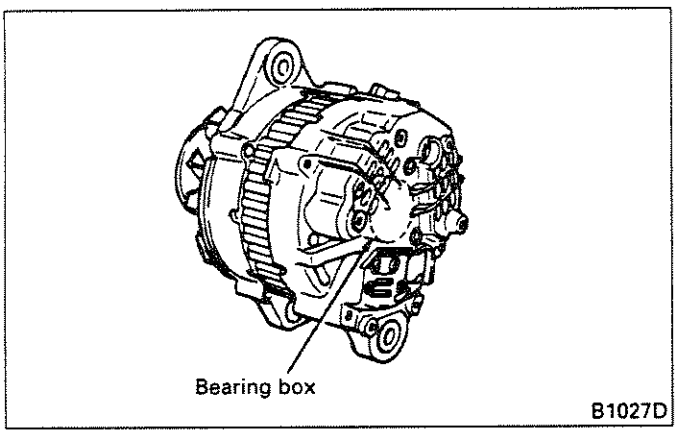

1. **The rear bearing is tightly fitted. Before separation, therefore, preheat the bearing box of the rear bracket by an air dryer to facilitate separation.**

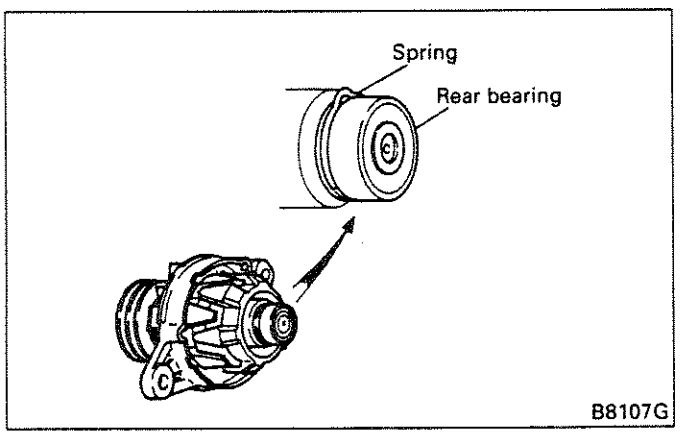

2. **At time of separation, use care not to lose the spring fitted to the outside of the rear bearing.**

(2) Removal of pulley

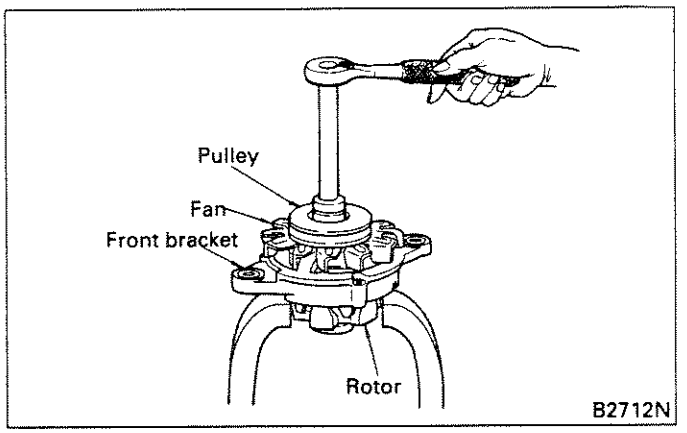

Hold the rotor in a vice, etc. and remove the pulley, fan and front bracket.

NOTE:

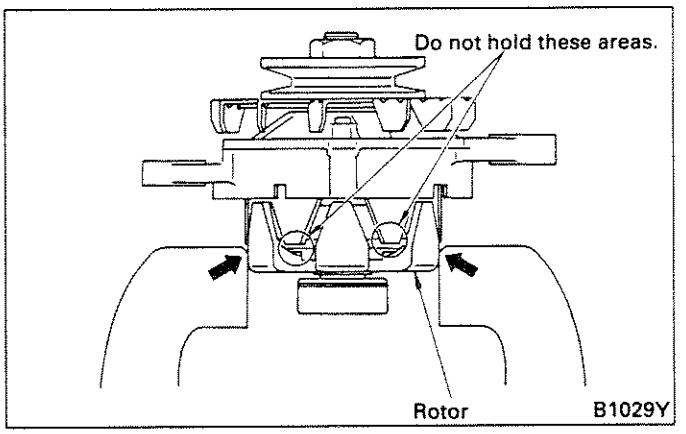

When holding the rotor in a vice, be sure to hold at illustrated portion.

(3) Removal of stator coil

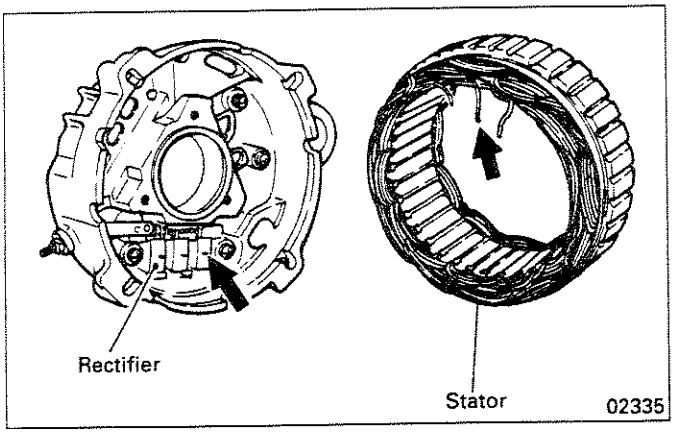

To remove the stator coil, unsolder the stator coil lead wires from the rectifier at three places.

NOTE:
Unsolder within as short a time as possible (within 5 seconds) using a soldering iron.

(4) Separation of rectifier from regulator

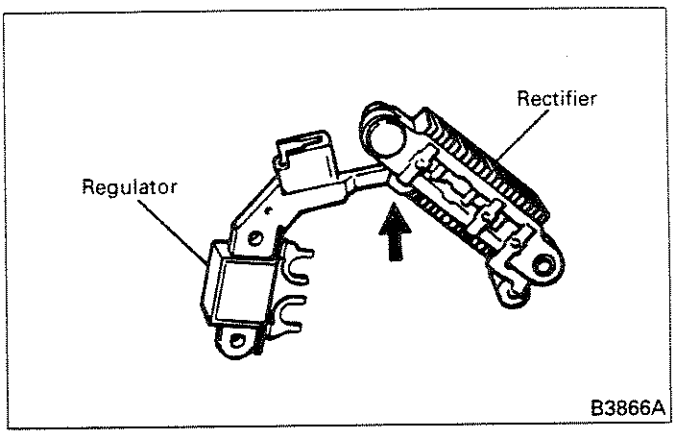

To separate the rectifier from the regulator, unsoldering the connection shown.

NOTE:
Unsolder within as short a time as possible (within 5 seconds) using a soldering iron.

5.5.3 Inspection

Item		NV
Field coil resistance	40A <A4T40287>	Approx. 6.2 Ω
	40A <Except A4T40287>, 50A	Approx. 8 Ω
Ground test		–

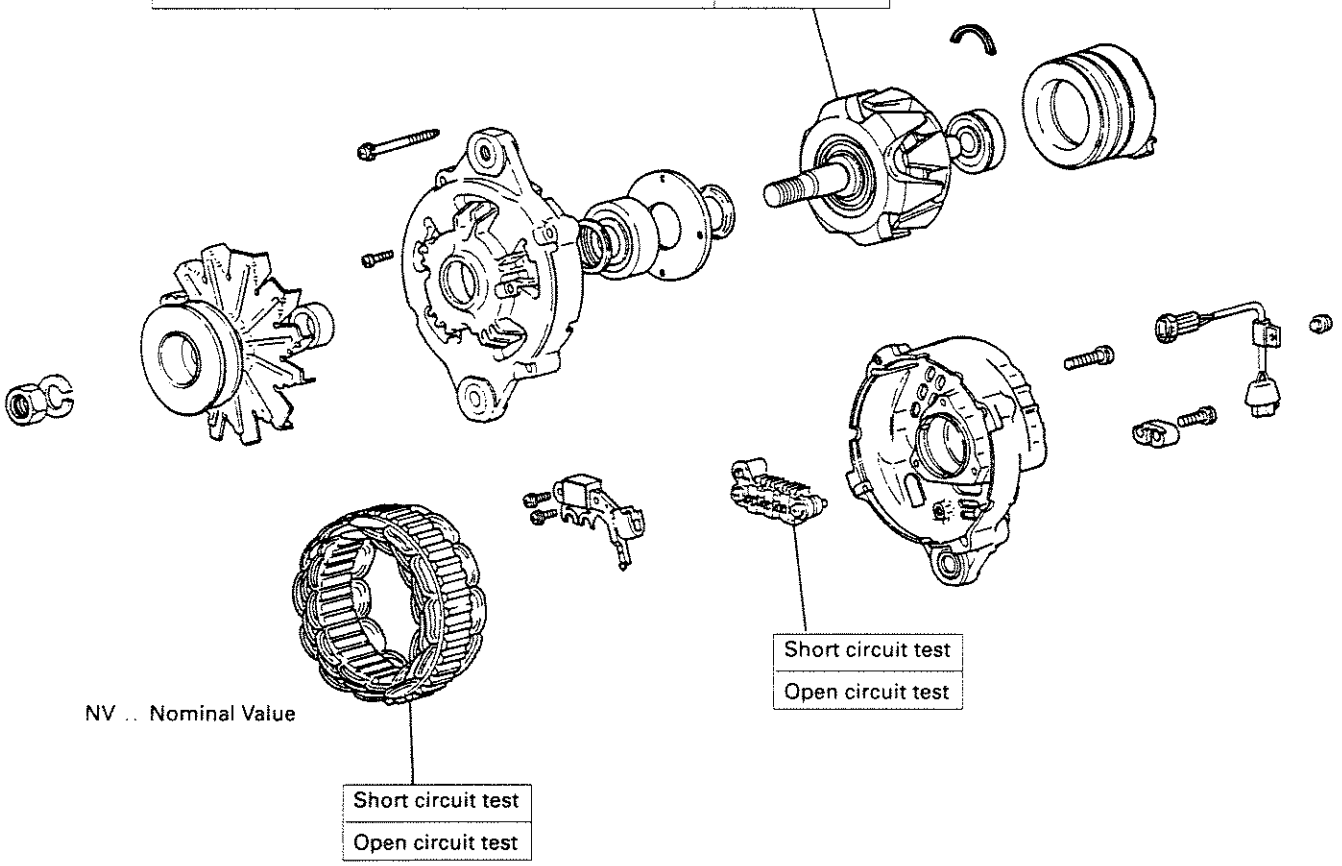

Inspection Procedure

(1) Inspection of stator

(a) Continuity across leads

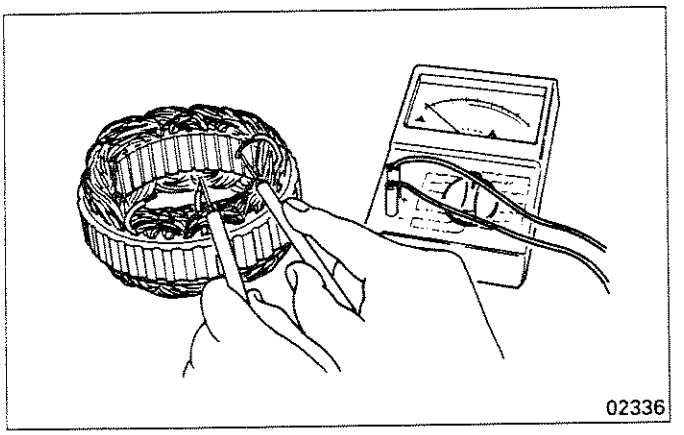

Check that there is continuity across stator leads. If there is no continuity, indicating a broken wire, replace the stator.

(b) Continuity across stator leads and core

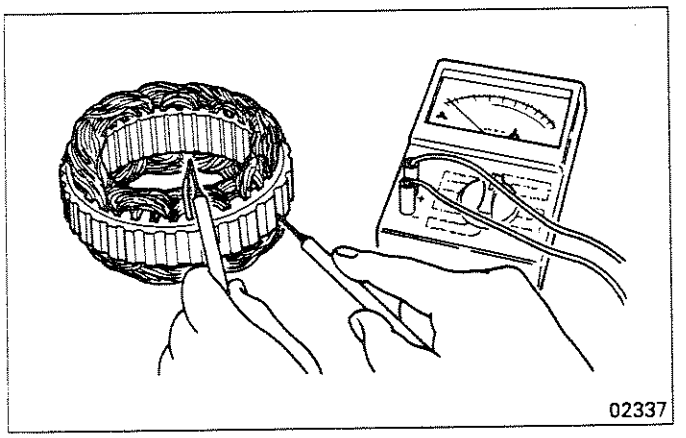

Check that there is no continuity across the stator leads and core.
If there is, replace the stator as it is grounded.

(2) Inspection of rectifier

Measure resistance of each diode. Measure both when with the circuit tester (+) probe applied to the diode and when with the (–) probe applied to the diode.

- If resistance is infinite in both cases, the diode is open.
- If resistance is close to zero in both cases, the diode is shorted.

In the case of open or shorted diode, replace the rectifier.
Measure according to the following procedures.

(a) Measurement of diode mounted to heat sink (40 A: 6 places, 50 A: 8 places)

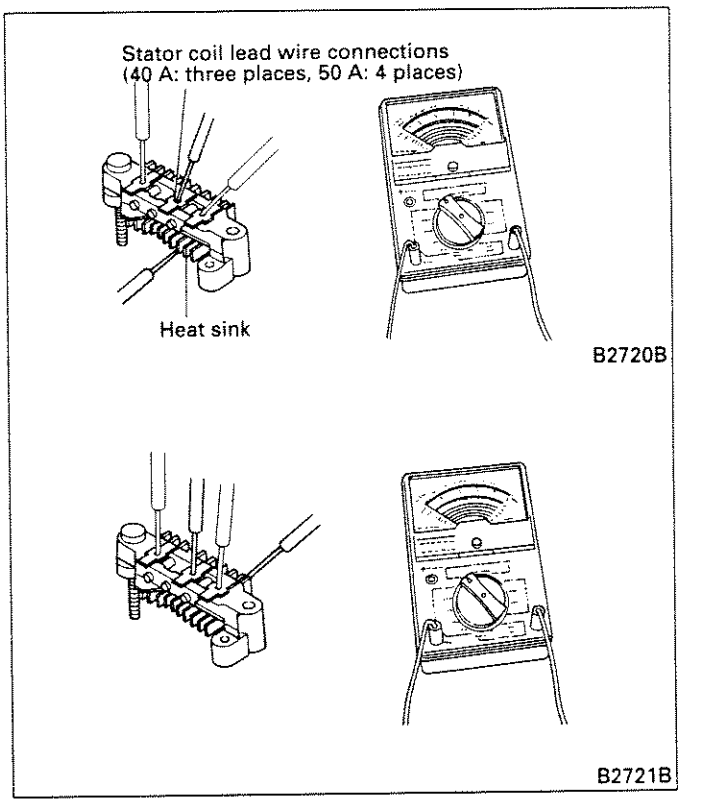

Measure between the heat sink and stator coil lead connections.

(b) Measurement of diode trio (3 places)

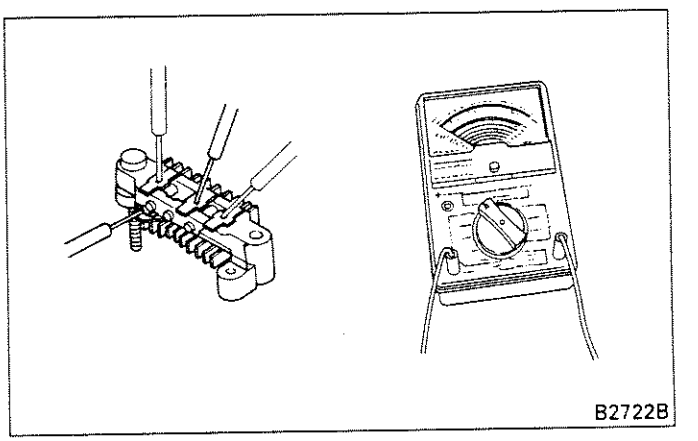

Measure between the plate connecting to the regulator and the stator coil lead connections.

(3) Inspection of field coil

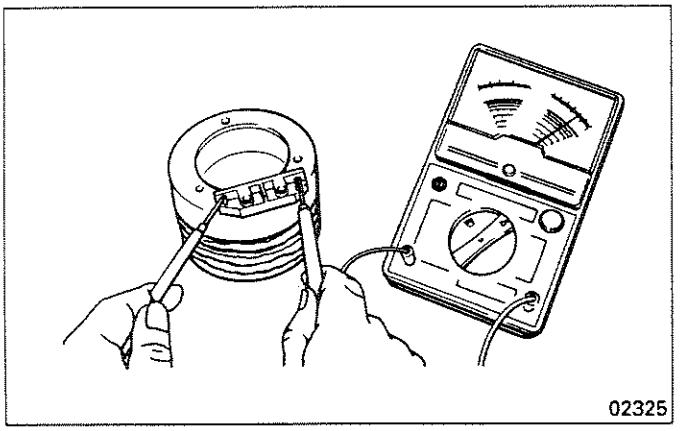

Measure the resistance across field coil terminals and, if the measurement is out of specification, replace the field coil.

(4) Inspection of bearing

Replace the bearing if defect is evident.

(a) Replacement of front bearing

(Removal)

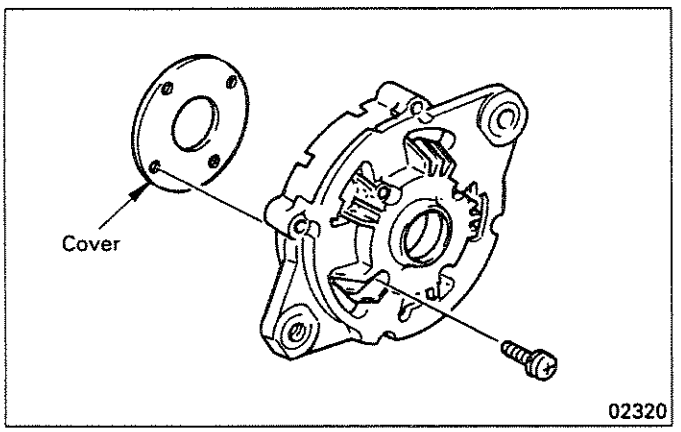

1) Remove the bearing cover.

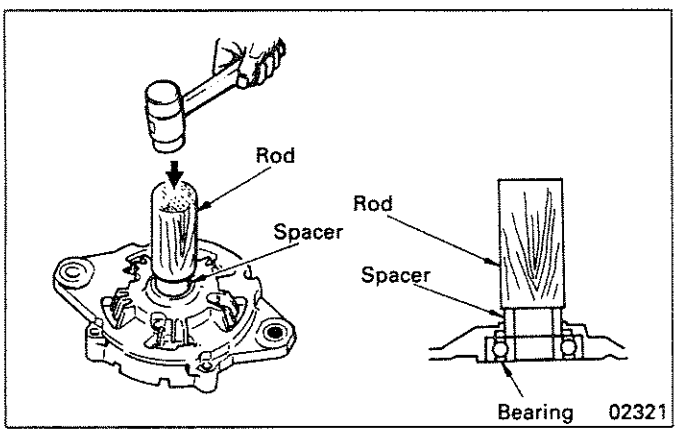

2) Apply a rod to the spacer on the front side of the front bracket and strike out the bearing.

(Installation)

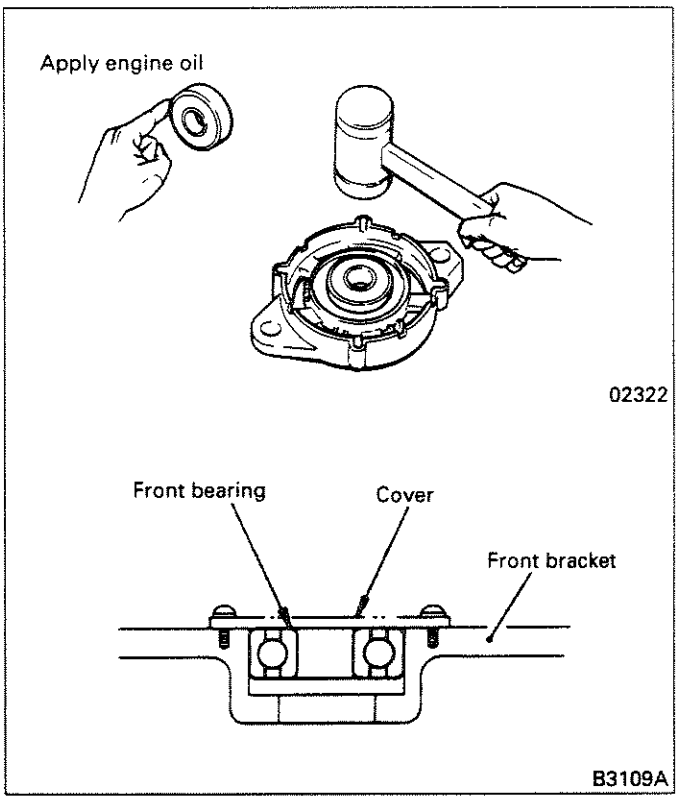

1) Apply a light coat of engine oil to the outside of the bearing and install to the inside of the front bracket using a press.
Install flush with the cover mounting portion.

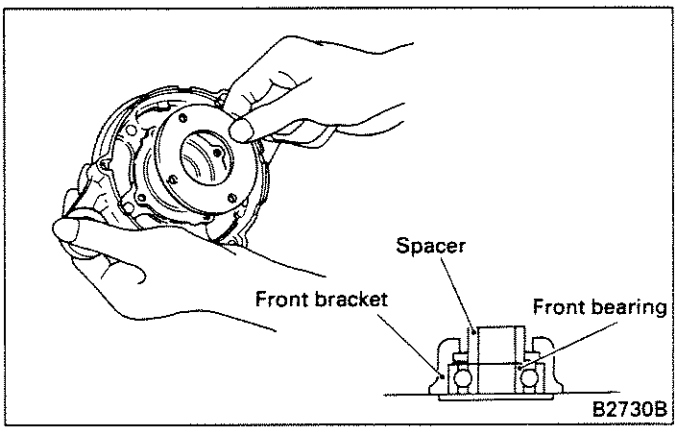

2) Install the cover and strike the spacer with a soft hammer, etc. to make sure that the bearing and cover are in contact with each other. If not, strike the spacer to bring them into contact.

(b) Replacement of rear bearing

(Removal)

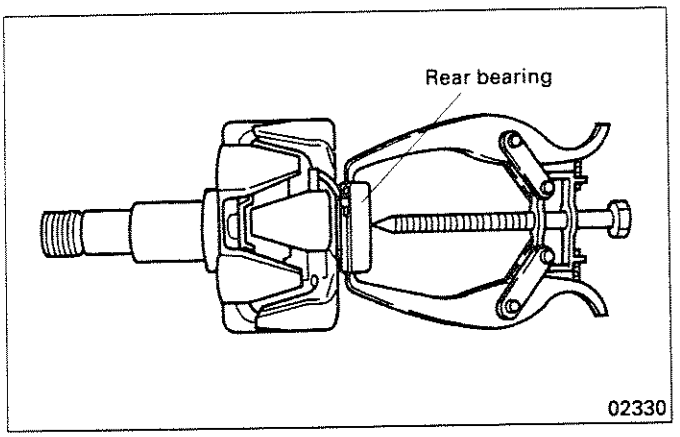

(Installation)

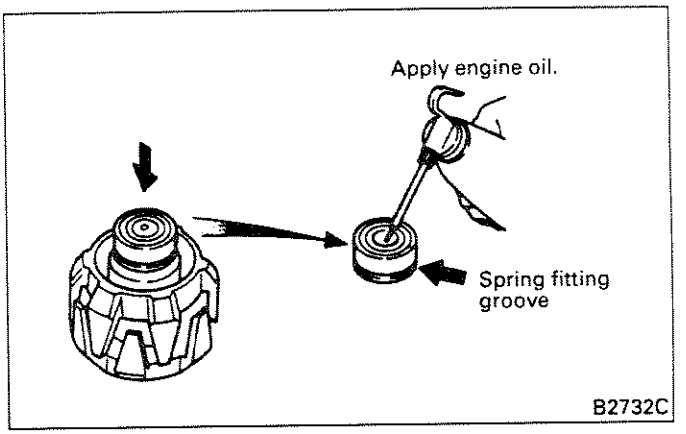

Apply a light coat of engine oil to the inside of the bearing and using a press, install with the spring fitting groove of the bearing facing the rotor side.

5.5.4 Reassembly

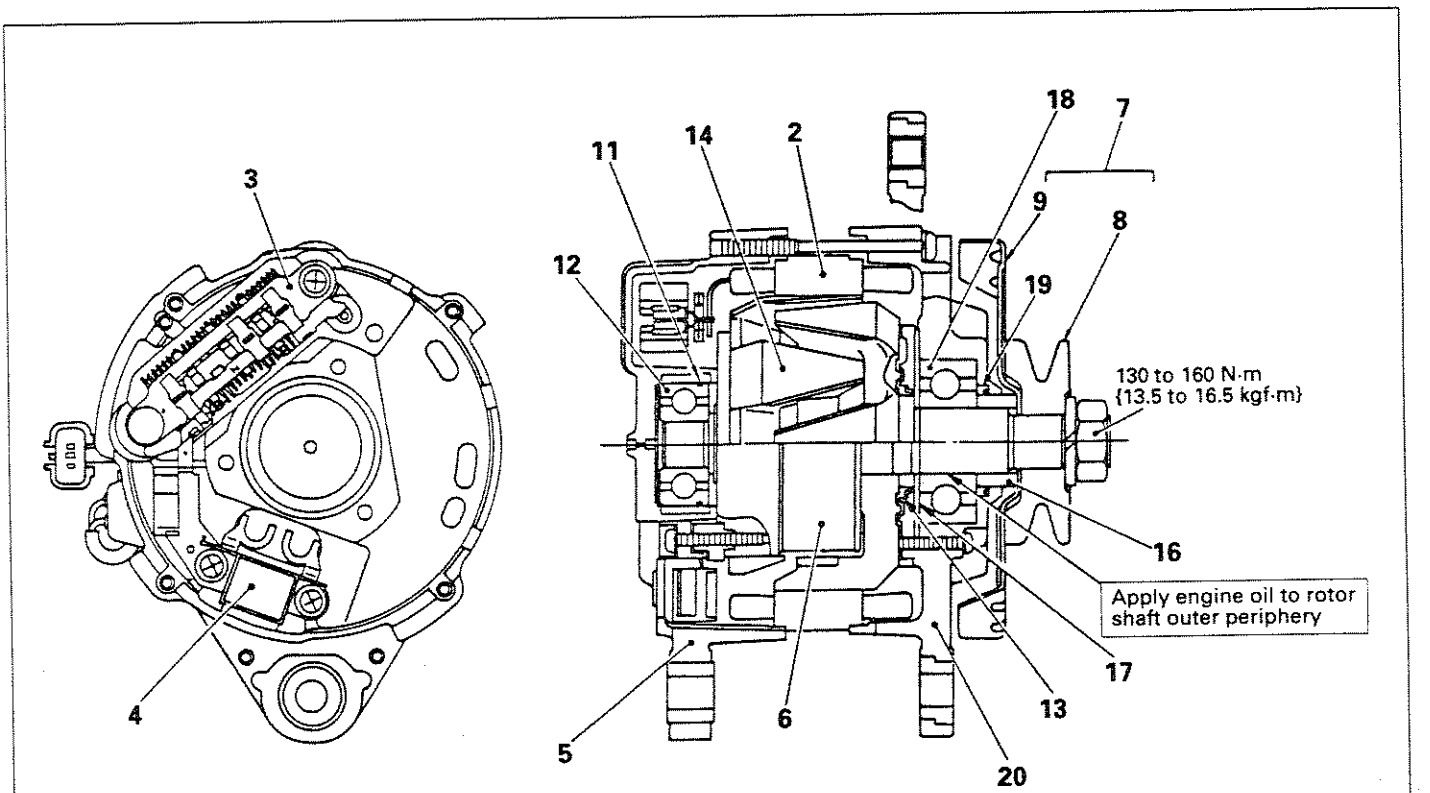

Components

1: 3, 4, 5

10: 11, 12, 13, 14

15 : 16, 17, 18, 19, 20

Reassembly sequence

15 (20→16→19→18→17)→⑩ (14→13→12→⑪)→7 (8→9)→1 (5→④→③)→6→2

For parts with an encircled number, refer to Reassembly Procedure that follows.

B2990N

Reassembly Procedure

(1) Installation of regulator and rectifier

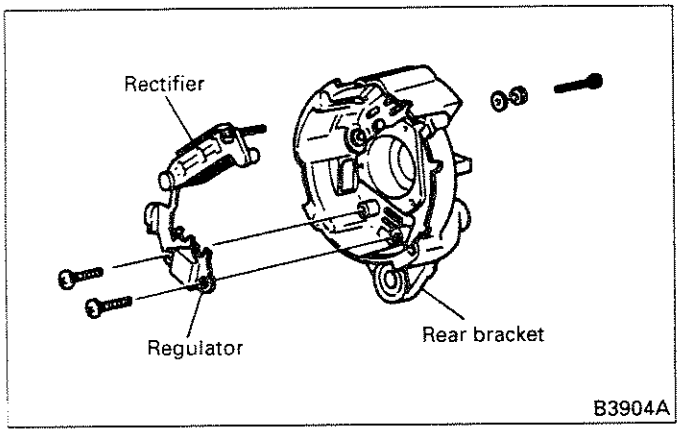

Solder the regulator to the rectifier with the two parts installed to the rear bracket.

NOTE:
Solder within as short a time as possible (within 5 seconds) using a soldering iron.

(2) To install the stator coil, reverse the order of disassembly. [Refer to Item (3), Section 5.5.2.]

(3) Installation of spring

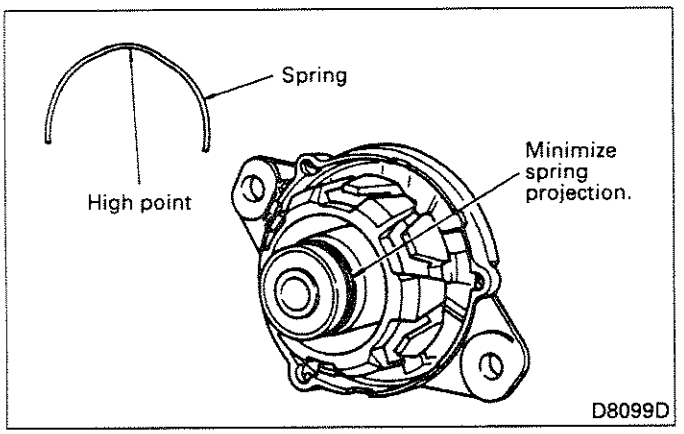

Install the spring with its highest point seated in the deepest of the spring fitting groove of the bearing.

5.5.5 Inspection and adjustment after installation

The inspection and adjustment procedures for the 30 A, 40 A, 80 A alternator are applicable. Refer to Section 5.3.5 and use the following specifications.

<Alternator output current>

		Output current
40A alternator <except A4T40287> (when cold)	1,500 rpm, 27V	26A or more
	2,500 rpm, 27V	37A or more
40A alternator <A4T40287> (when cold)	1,500 rpm, 27V	30A or more
	2,500 rpm, 27V	41A or more
50A alternator (when cold)	1,500 rpm, 27V	26A or more
	2,500 rpm, 27V	46A or more

<IC regulator regulated voltage>

Nominal value	28 to 29V (5000 rpm, 5 A or less)

5.6 90 A Alternator (brushless type)

5.6.1 Removal and installation

5.6.2 Disassembly

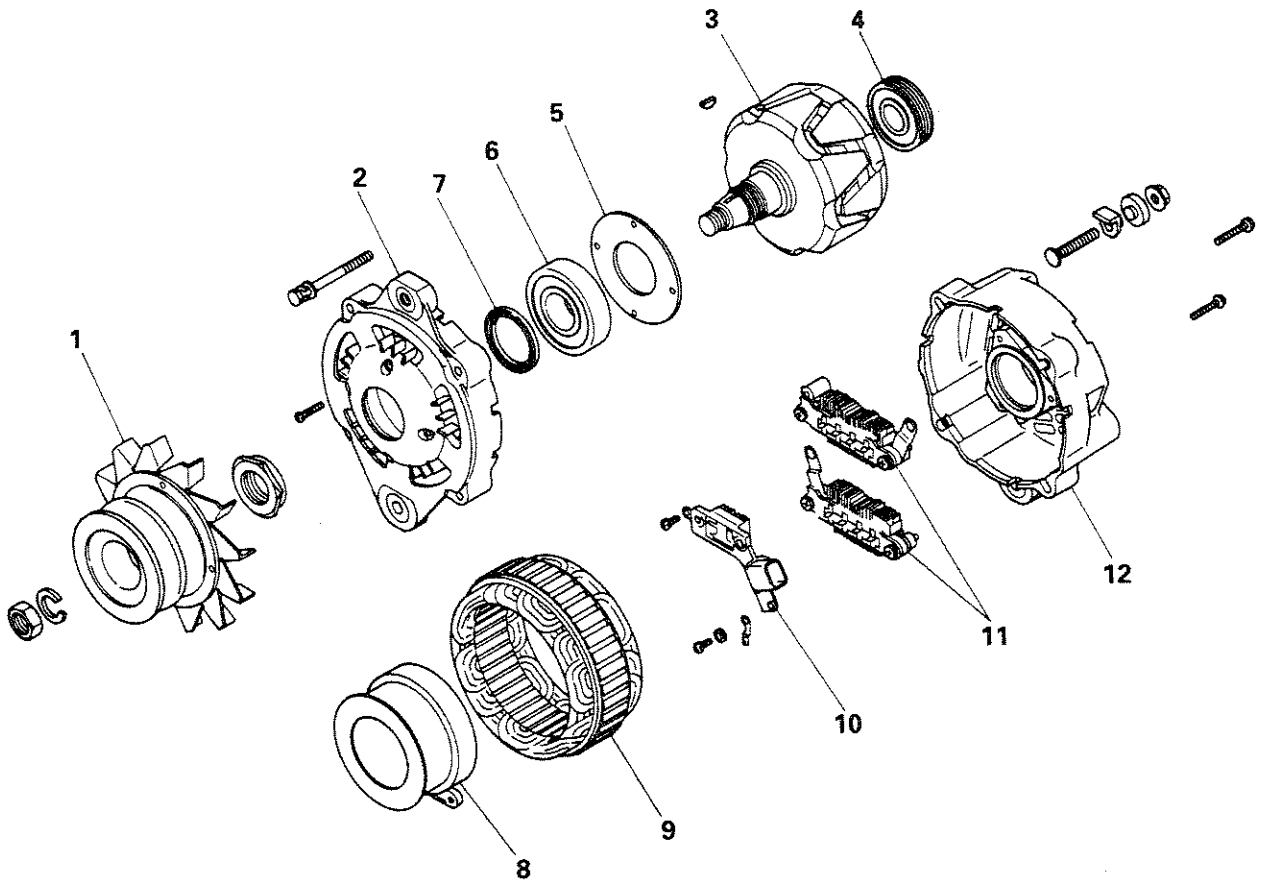

Disassembly sequence

① Pulley and fan
② Front bracket
③ Rotor
*4 Rear bearing
5 Cover
*6 Front bearing
7 Oil seal
8 Field coil
⑨ Stator
⑩ Regulator
⑪ Rectifier
⑫ Rear bracket

Parts marked with * should not be removed unless defects are evident.
For parts with an encircled number, refer to Disassembly Procedure that follows.

Disassembly Procedure

(1) Separation of front bracket and rear bracket

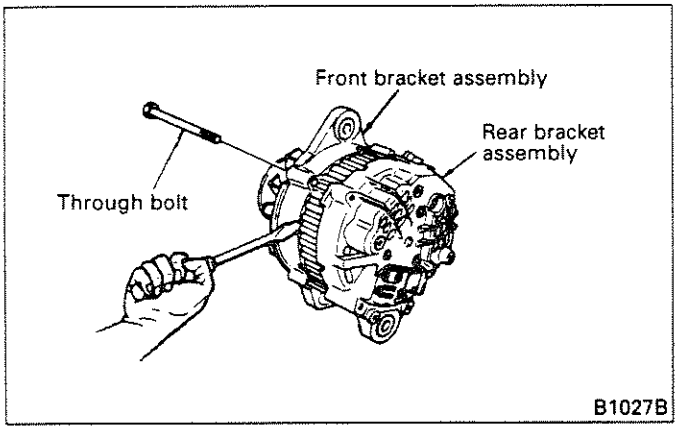

Remove the through bolt. Then, pry apart the front bracket and rear bracket using a screwdriver.

(2) Removal of pulley and fan

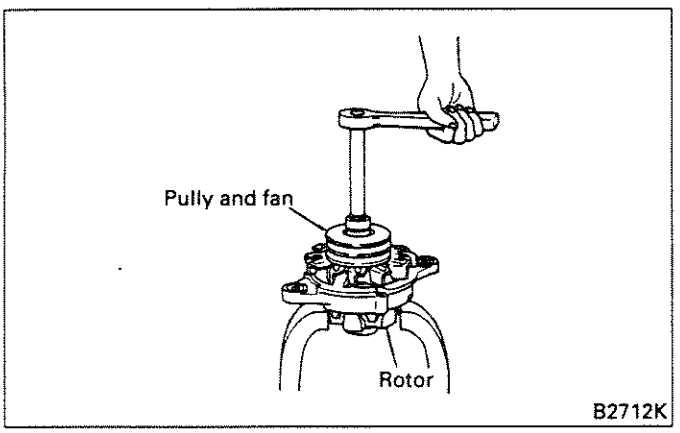

Secure the rotor in a vise, then remove the pulley and fan.

NOTE:

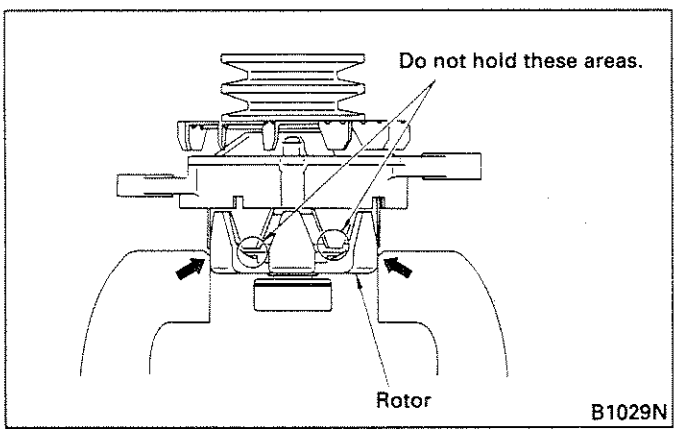

Be sure the vise grips the rotor only at the points illustrated.

(3) Removal of rotor

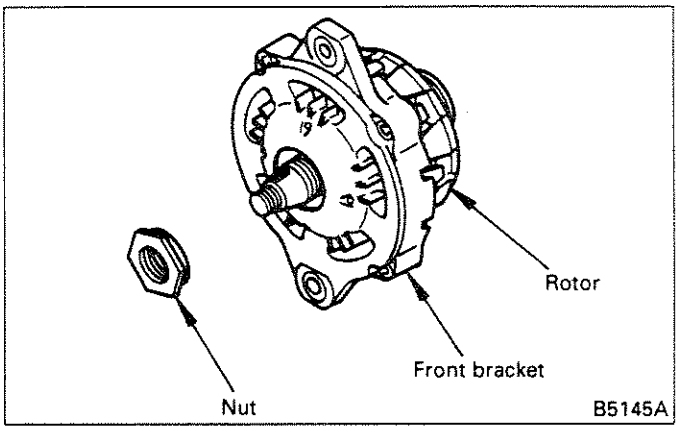

The rotor and front bracket are held together by a nut. Take off the nut before removing the rotor.

(4) Removing stator

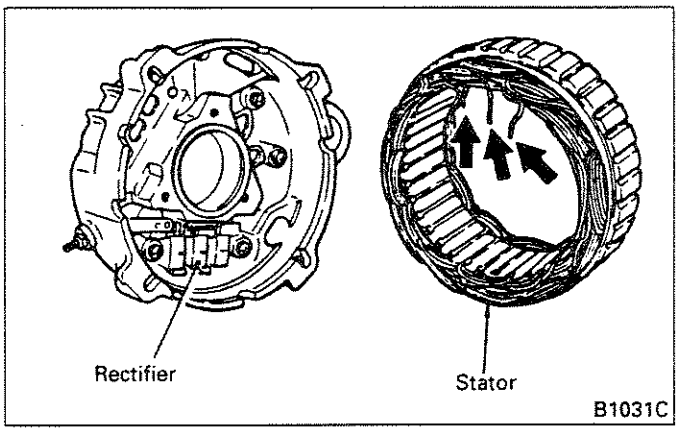

Unsolder the stator coil leads from the rectifier (3 places) before removing the stator.

NOTE:

Be sure to use a soldering iron to remove and replace the solder. Apply the soldering iron for as short a time as possible (within 5 seconds).

(5) Separation of rectifier and regulator

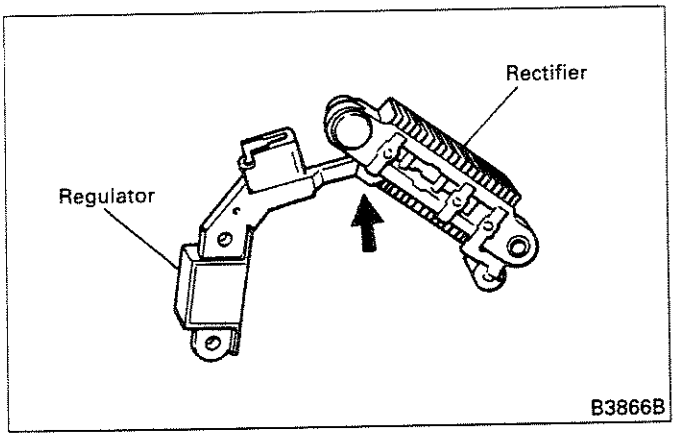

Separate the rectifier and regulator by unsoldering the joint shown in the illustration.

NOTE:
Be sure to use a soldering iron to remove and replace the solder. Apply the soldering iron for as short a time as possible (within 5 seconds).

5.6.3 Inspection

Item		NV
Field coil resistance	A4T70187, A4T75589A	Approx. 7 Ω
	A4T75687	Approx. 8.2 Ω

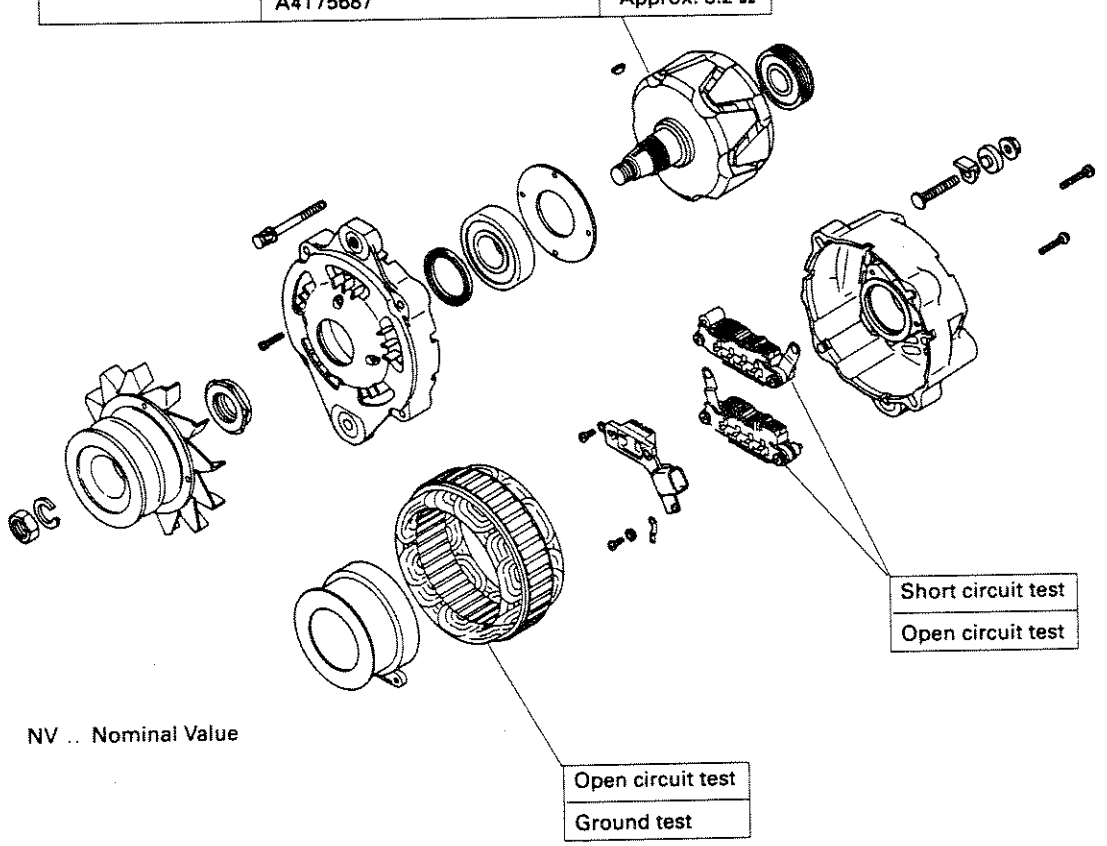

NV .. Nominal Value

Inspection Procedure

(1) Stator inspection

(a) Continuity of leads

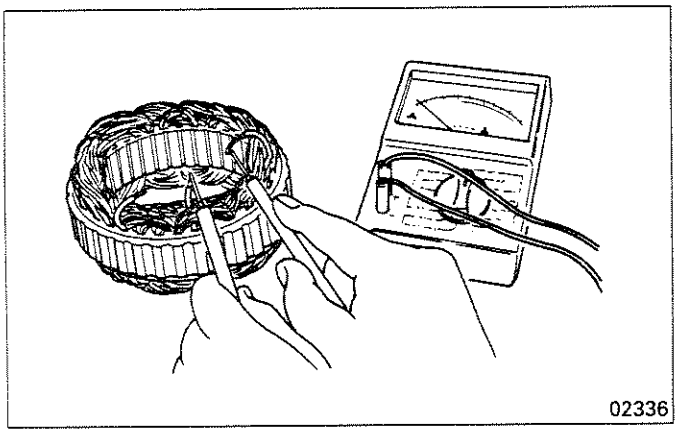

Check for continuity between each pair of stator coil leads. If any test shows
a lack of continuity, a lead is broken and the stator must be replaced

(b) Continuity between stator leads and core

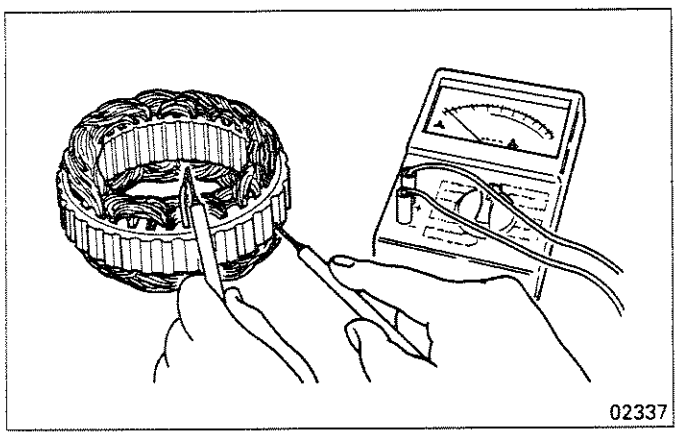

Confirm that there is no continuity between the stator leads and core. If continuity exists between any lead and the core, the stator is grounded and must be replaced.

(2) Inspection of rectifier

Measure the resistance of each diode. Take measurements first with the tester's (+) probe applied to the diode, then with the tester's (–) probe applied to the diode.

- If both measurements show infinite resistance, the relevant diode is open-circuited
- If both measurements show resistance of close to zero, the relevant diode is short-circuited.

If any diode is either open-circuited or short-circuited, the rectifier must be replaced. Take measurements in accordance with the following instructions.

(a) Measurement across heat sink and diodes (8 places)

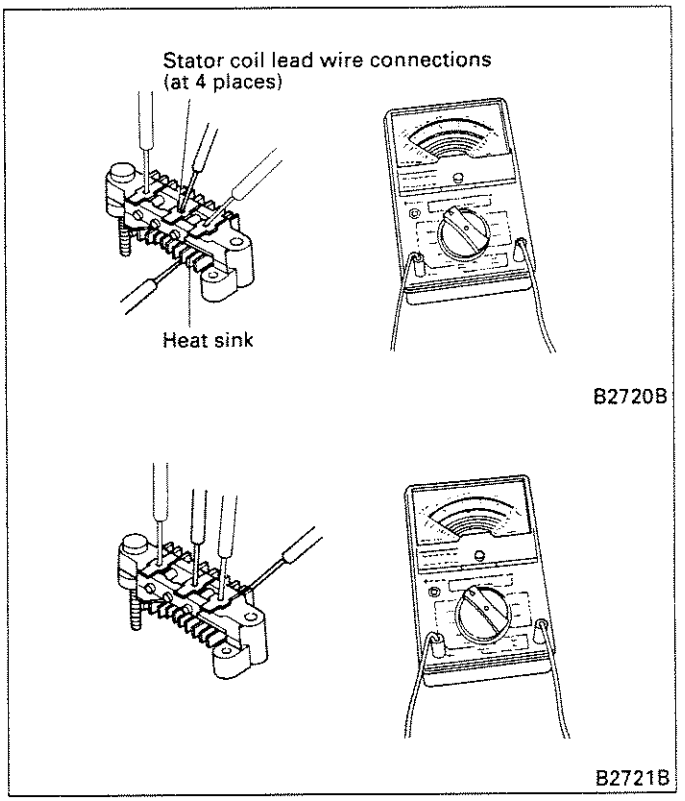

Measure the resistance between the heat sink and stator coil lead connection points.

(b) Diode trio measurements (3 places)

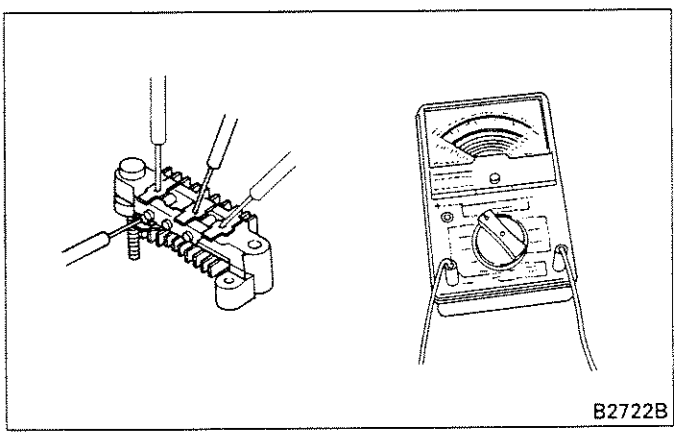

Measure the resistance between the stator coil lead connection points and the plate that leads to the regulator connections.

(3) Field coil inspection

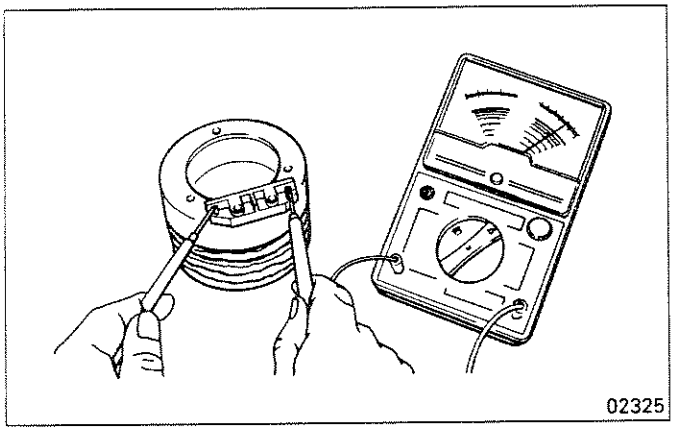

Measure the resistance between the field coil terminals. If the measurements are out of specification, replace the field coil.

(4) Bearing inspection

Replace any bearing that appears defective.

NOTE:
If the front bearing is replaced, the oil seal must also be replaced.

(a) Front bearing replacement

<Removal>

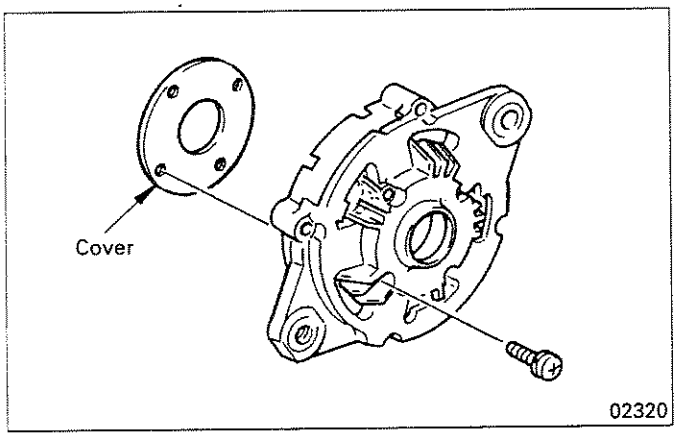

1) Remove the bearing cover.

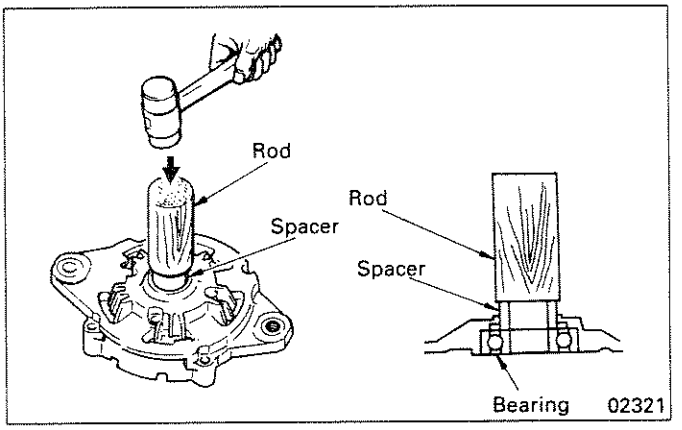

2) Apply a rod to the spacer on the front surface of the front bracket. Tap out the bearing with a hammer.

<Installation>

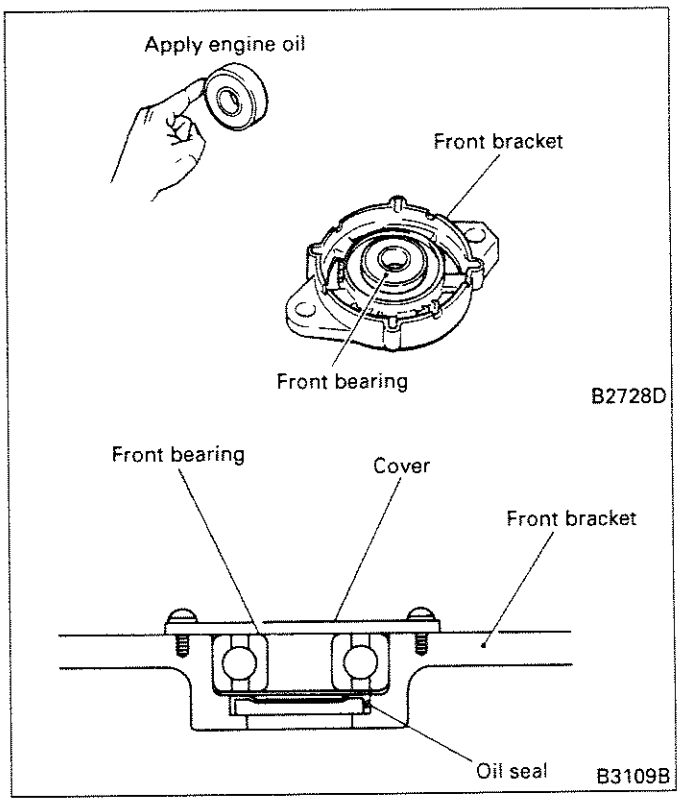

1) Insert the oil seal in the position shown and pack its lip with grease. Next, apply a thin film of engine oil to the bearing's outer periphery. Finally, press-fit the bearing until it is flush with the cover mounting surface.

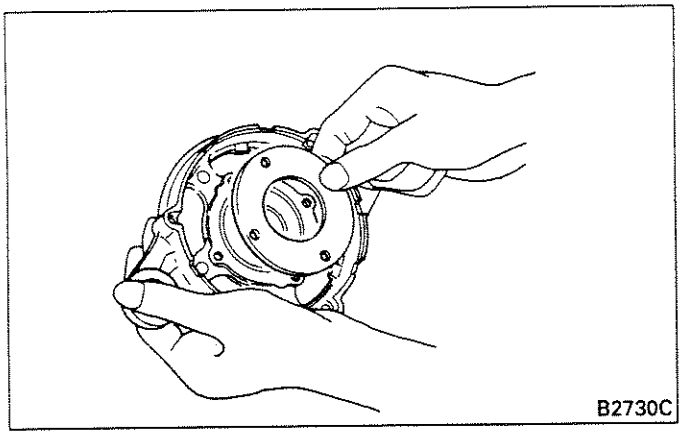

2) Fit the cover.

(b) Rear bearing replacement

<Removal>

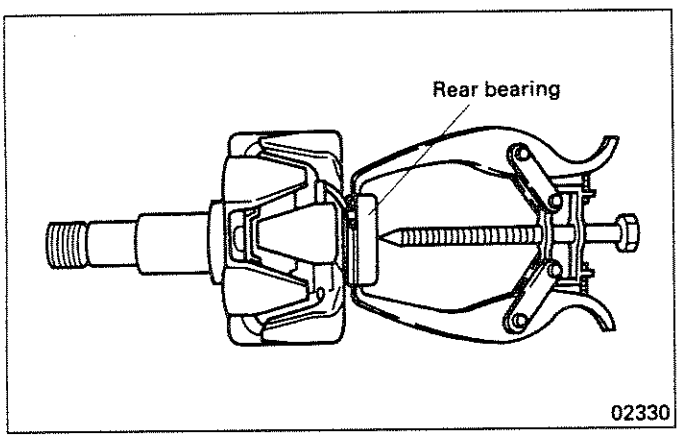

<Installation>

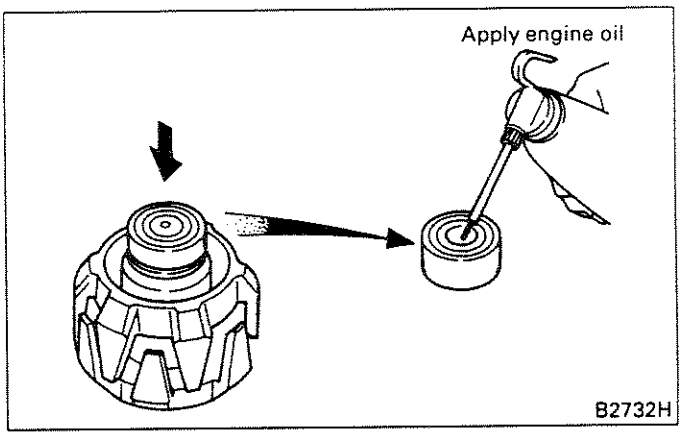

5.6.4 Reassembly

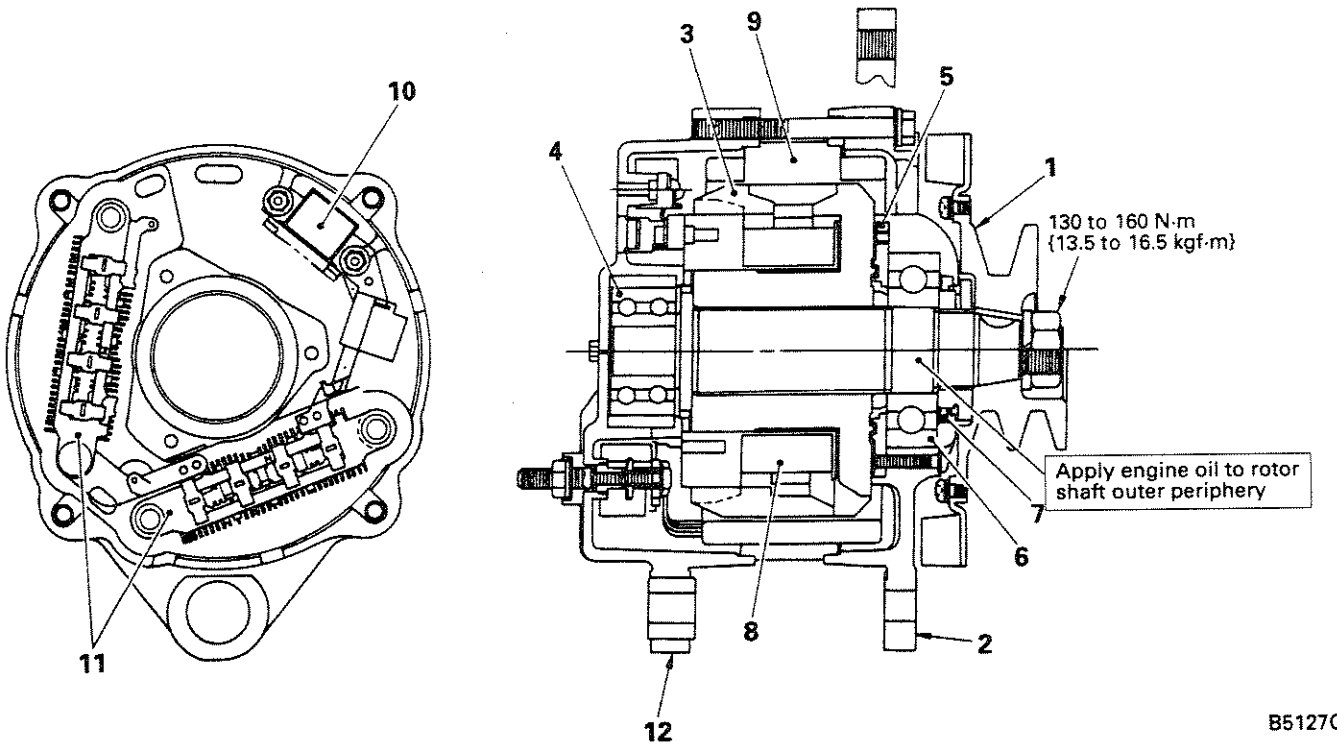

Reassembly sequence

12→⑪→⑩→⑨→8→2→7→6→5→3→4→①

For parts with an encircled number, refer to Reassembly Procedure that follows.

Reassembly Procedure

(1) Regulator and rectifier installation

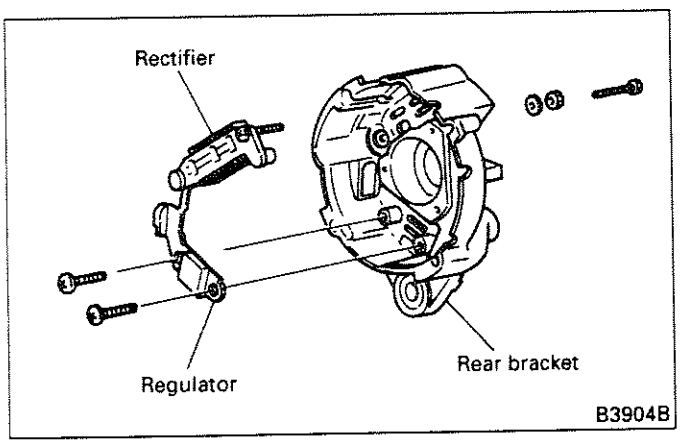

Fit the regulator and rectifier into the rear bracket before soldering them.

NOTE:

Be sure to use a soldering iron and apply it for as short a time as possible (within 5 seconds).

(2) Install the stator. The stator installation sequence is the opposite of the disassembly sequence (refer to item (4) of section 5.6.2).

(3) Install the pulley and fan. The pulley and fan installation sequence is the opposite of the disassembly sequence (refer to item (2) of section 5.6.2).

5.6.5 Inspection and adjustment after reassembly

(1) Read and adhere to the precautions given in item (1) of section 5.3.5.

(2) Performance test

(a) Bench test

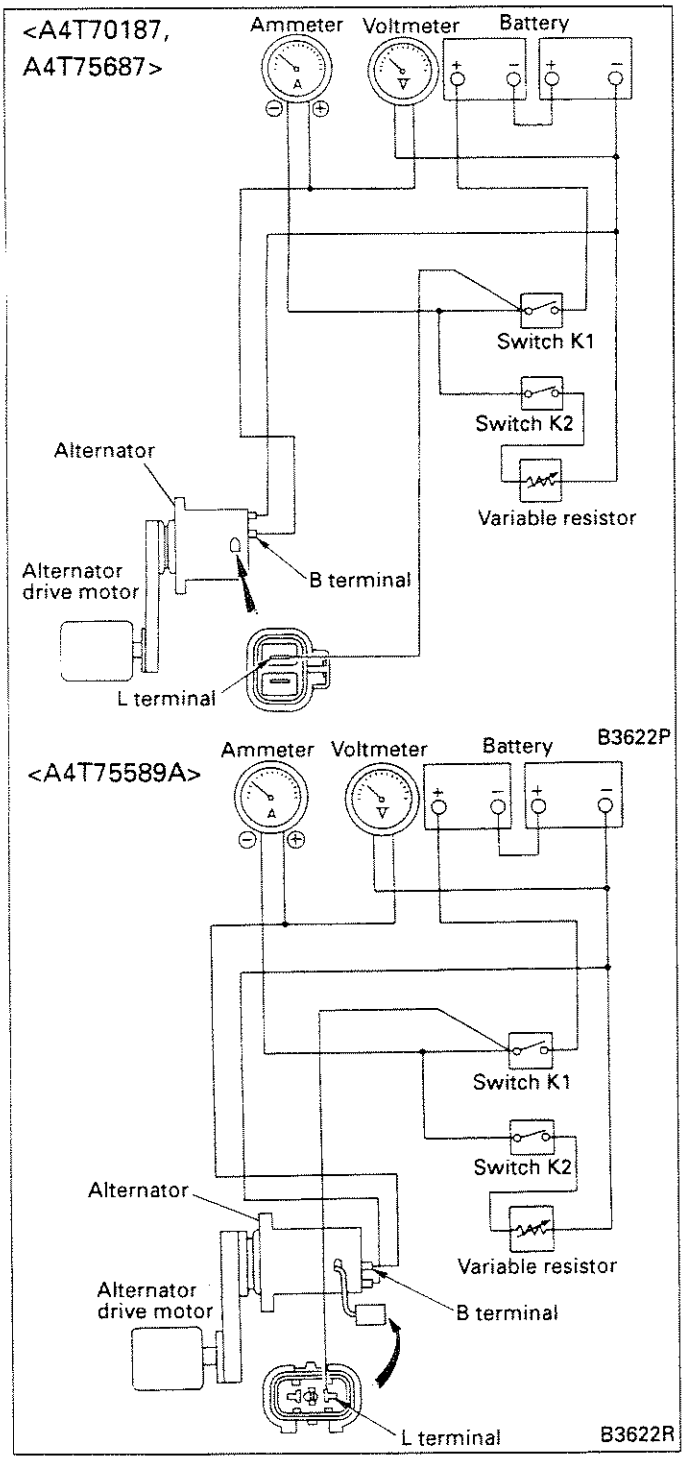

Carry out testing with the circuit connected as shown above.

- Set the load resistor for maximum resistance (such that almost no current flows), then close switches K_1 and K_2.
- Gradually increase the alternator speed and reduce the load resistance. Measure the current flowing when the alternator's terminal voltage and speed reach the specified nominal values. If the measurement is out of specification, inspect the alternator.

		Output current
90A alternator (when cold)	1,500 rpm, 27V	53A or more
	2,500 rpm, 27V	82A or more

(b) On-vehicle test

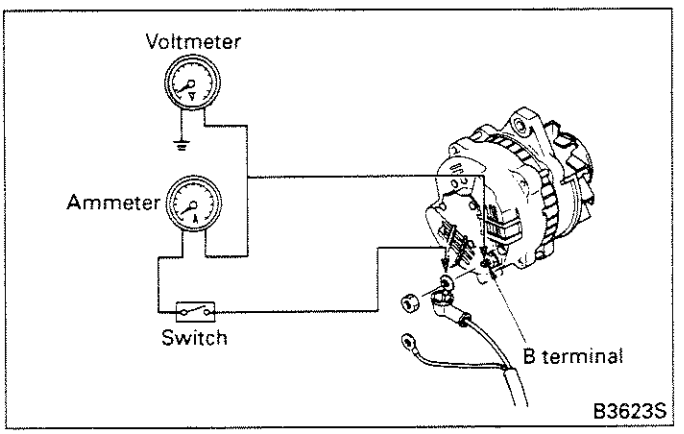

- Connect a switch between the battery and terminal B of the alternator. With the switch open, connect an ammeter (with a capacity of at least 90A) and voltmeter.
- Close the switch and confirm that the voltmeter indicates the battery voltage.
- Start the engine and immediately switch on all the vehicle's lamps to increase the engine speed. Observe the maximum ammeter reading when the alternator speed reaches 5,000 rpm.
- If the ammeter reading is at least 70% of the alternator's rated output current, the alternator may be considered usable.

NOTE:
On-vehicle tests provide only a rough indication of alternator performance. More precise tests on a bench must also be carried out.

(3) Regulator tests

(a) Bench test

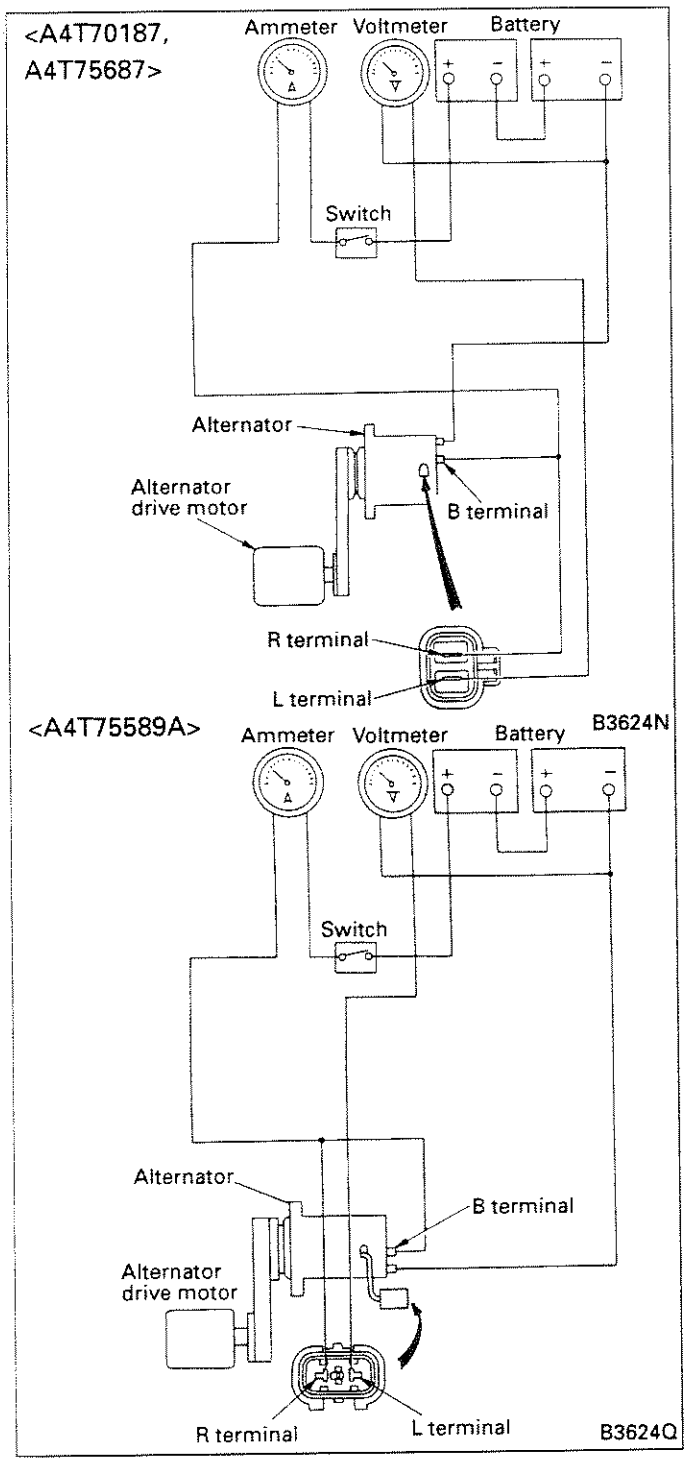

Check the regulated voltage with the circuit connected as shown above.

- Using a fully charged battery, close the switch. Gradually increase the alternator speed. Confirm that the current flowing is 5A or less when the alternator speed reaches 5,000 rpm.
- If the voltage (regulated voltage) at this time conforms with the specified nominal value, the regulator is usable. If the voltage does not conform with the nominal value, replace the regulator assembly.

Nominal value	28 to 29V

(b) On-vehicle test

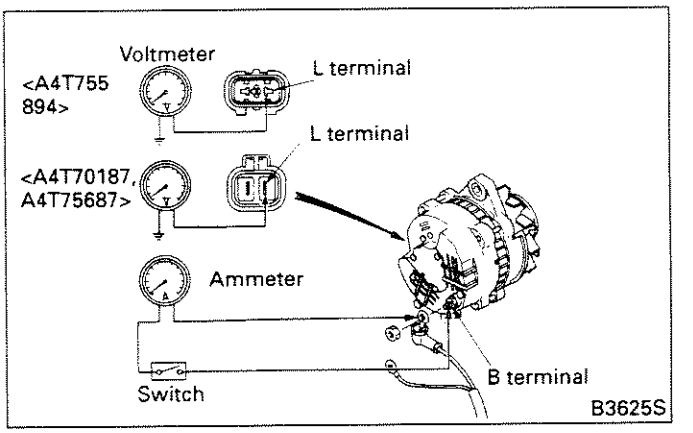

- Connect an ammeter, voltmeter, and switch between the harness and alternator, as illustrated.
- Close the switch and confirm that the voltmeter reading is zero. If the voltmeter needle moves, the alternator or wiring is defective.
- So that no current flows through the ammeter when the engine is started, short-circuit the ammeter terminals. Then, start the engine.
- If the charging current is 5A or less when the engine speed reaches 2,000 rpm, observe the regulated voltage reading. If the charging current exceeds 5A, either wait for the battery to charge or replace the battery with a fully charged one. Alternatively, connect a 0.25 Ω (25 W) resistor in series with the battery to suppress the charging current.
- If the regulated voltage does not conform with the specified nominal value, replace the regulator assembly.

5.7 60A, 110A, 150A Alternators

5.7.1 Removal and installation (Refer to the instructions in section 5.3.1)

5.7.2 Disassembly

<60A Alternator>

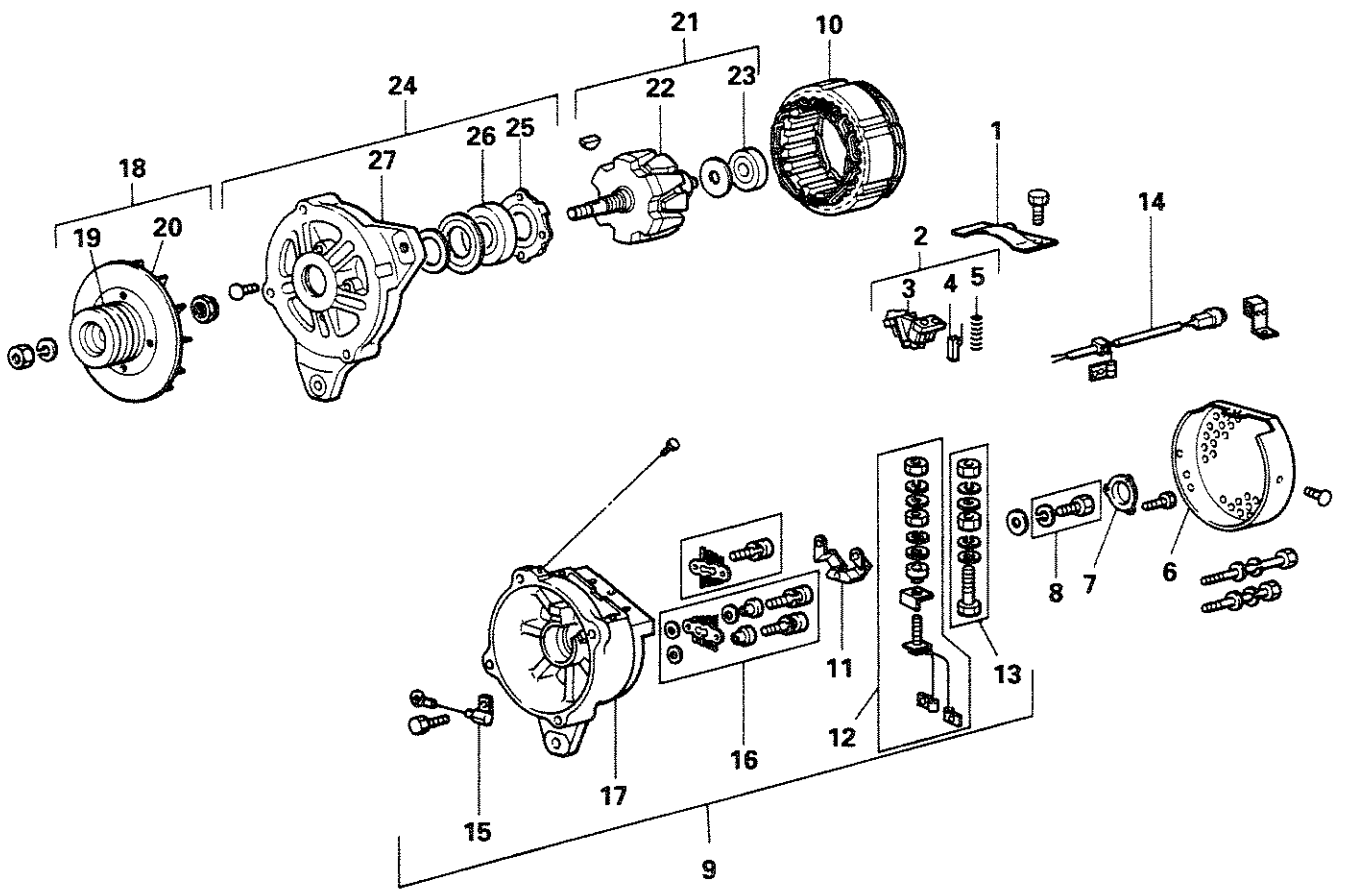

Disassembly sequence

1	Cover	10	Stator	*19	Pulley
2	Brush holder assembly	11	Plate	*20	Fan
3	Brush holder	12	Lead wire assembly	21	Rotor assembly
4	Brush	13	Terminal set	㉒	Rotor
5	Brush spring	14	Connector	*23	Rear bearing
6	End cover	15	Condensor	㉔	Front bracket assembly
7	Cover	16	Heat sink set	25	Cover
8	Bolt set	17	Rear bracket	*26	Front bearing
9	Rear bracket assembly	⑱	Pulley assembly	㉗	Front bracket

Parts marked with "*" should not be removed unless damage is evident.
For parts with circled numbers, refer to section 5.3.2, "Disassembly Procedure."

B4539A

<110A, 150A alternators>

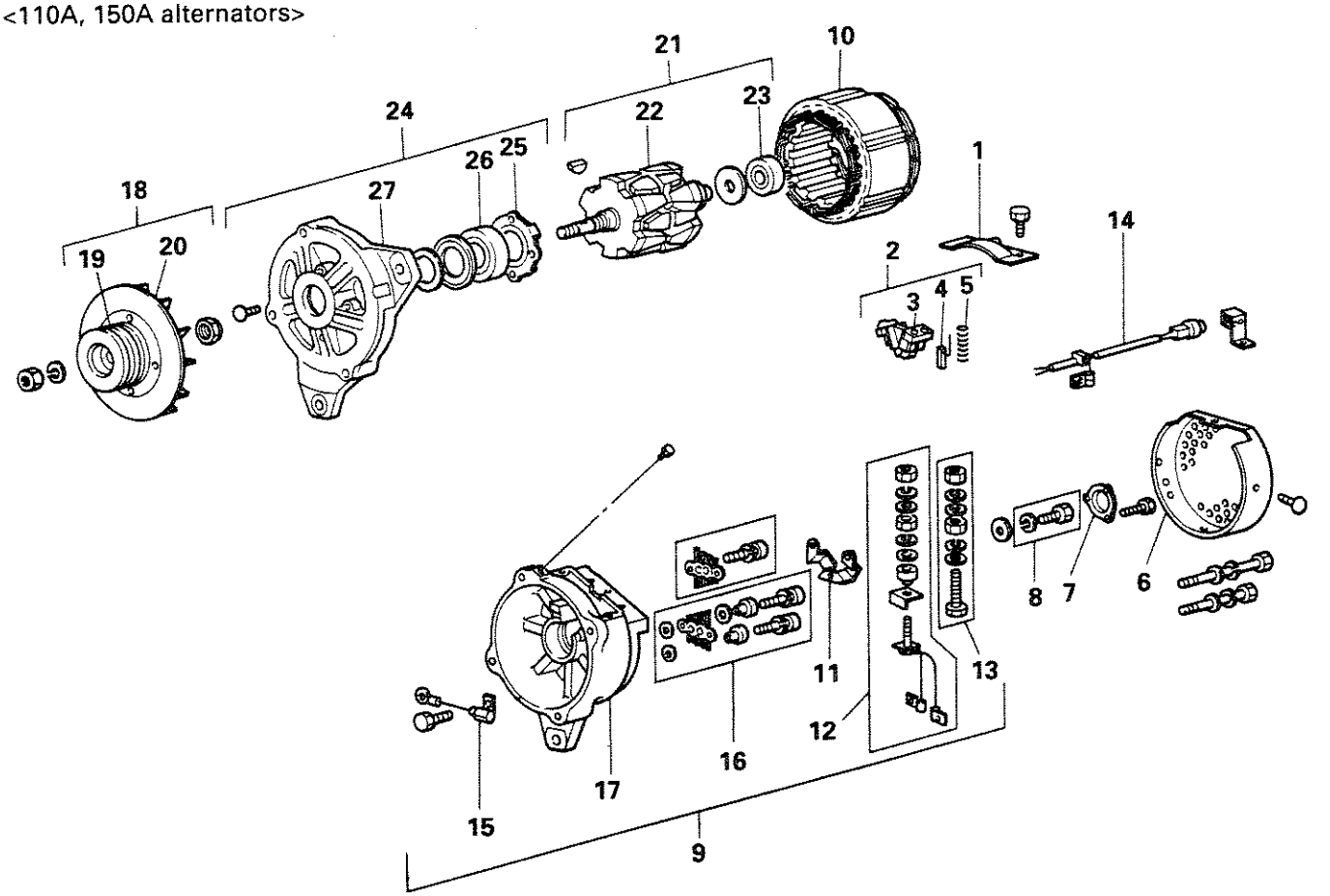

Disassembly sequence

1 Cover
2 Brush holder assembly
3 Brush holder
4 Brush
5 Brush spring
6 End cover
7 Cover
8 Bolt set
9 Rear bracket assembly
10 Stator
11 Plate
12 Lead wire assembly
13 Terminal set
14 Connector
15 Condensor
16 Heat sink set
17 Rear bracket
⑱ Pulley and fan
*19 Pulley
*20 Fan
21 Rotor assembly
㉒ Rotor
*23 Rear bearing
㉔ Front bracket assembly
25 Cover
*26 Front bearing
㉗ Front bracket

Parts marked with "*" should not be removed unless damage is evident.
For parts with circled numbers, refer to section 5.3.2, "Disassembly Procedure."

B4541A

5.7.3 Inspection

<60A, 110A, 150A alternators>

Item		NV	L
Field coil resistance	60A	Approx. 13 Ω	–
	110A	9.6 to 11.6 Ω	–
	150A	Approx. 3.0 to 3.7 Ω	–
Slip ring O. D.	60A, 110A (8DC), 150A	46	45.4
	110A (6D2)	41	40.4
Ground test		–	–

Item		NV	L
Brush spring tension	60A	3.8 N {0.38 kgf}	2 N {0.2 kgf}
	110A, 150A	3.1 to 4.3 N {0.32 to 0.44 kgf}	2 N {0.2 kgf}

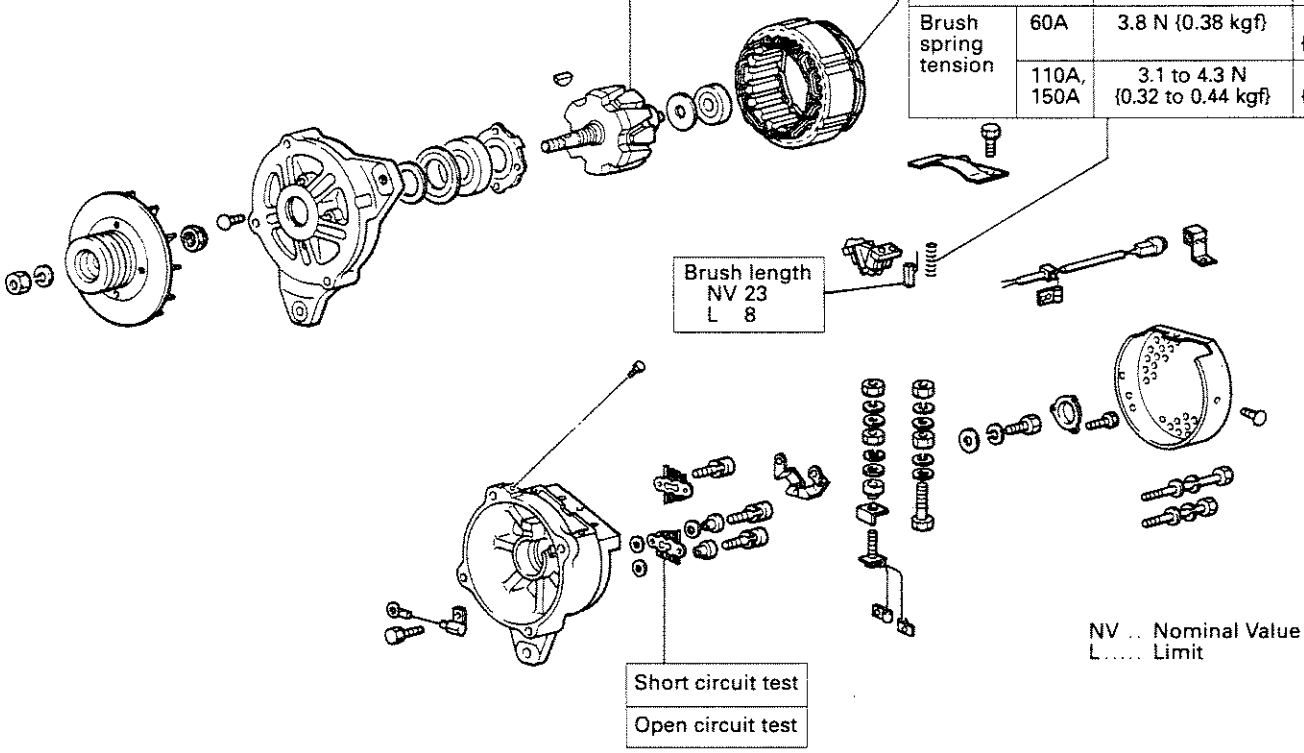

Refer to section 5.3.3 for inspection procedure.

B4539B

To check for a diode short or field coil open-circuit, it is not necessary to disassemble the alternator. Measure the continuity between the connector terminals using a tester to determine whether the diodes and field coil are usable.

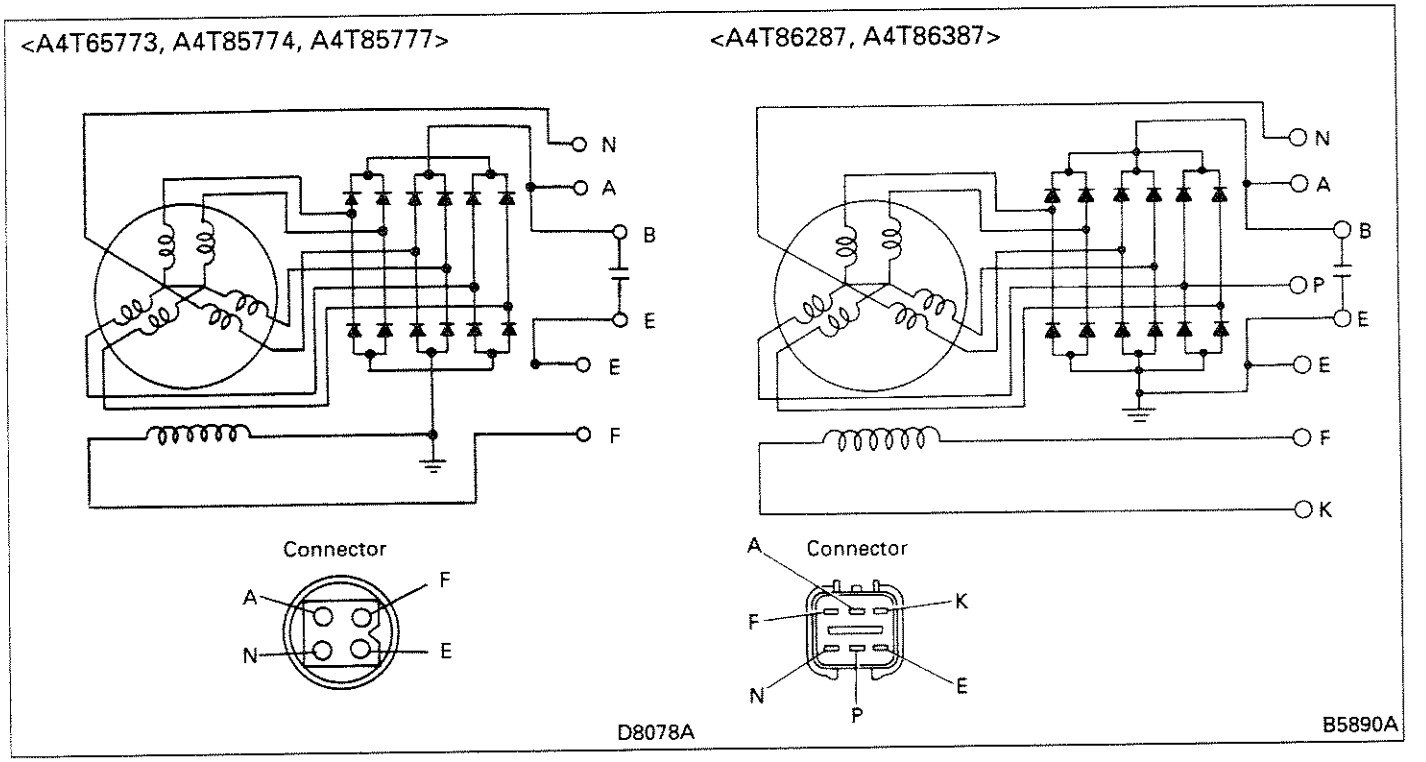

Measuring points	Good	Defective
F – E	Tester shows continuity.	No continuity (Brush in poor contact or field coil open circuited) Resistance 0 (Field coil short circuited)
N – A	Tester shows continuity when (black) is connected to N and (red) connected to A.	If tester shows no continuity when (black) is connected to N and (red) connected to A, all three ⊕ diodes are open circuited or stator coil open circuited. If tester shows continuity when (black) is connected to A and (red) connected to N, ⊕ diodes are short circuited.
N – E	Tester shows continuity when (black) is connected to E and (red) connected to N.	If tester shows no continuity when (black) is connected to E and (red) connected to N, all three ⊖ diodes are open circuited. If tester shows continuity when (black) is connected to N and (red) connected to E, ⊕ diodes are short circuited.

NOTE:
The colors in parentheses show the colors of tester lead rods. All three diodes are rarely open circuited. Each diode should be tested to determine whether it is good or defective.

5.7.4 Reassembly

<60A alternator>

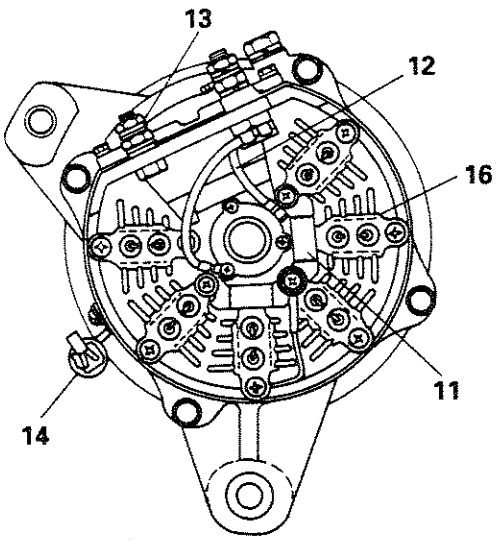

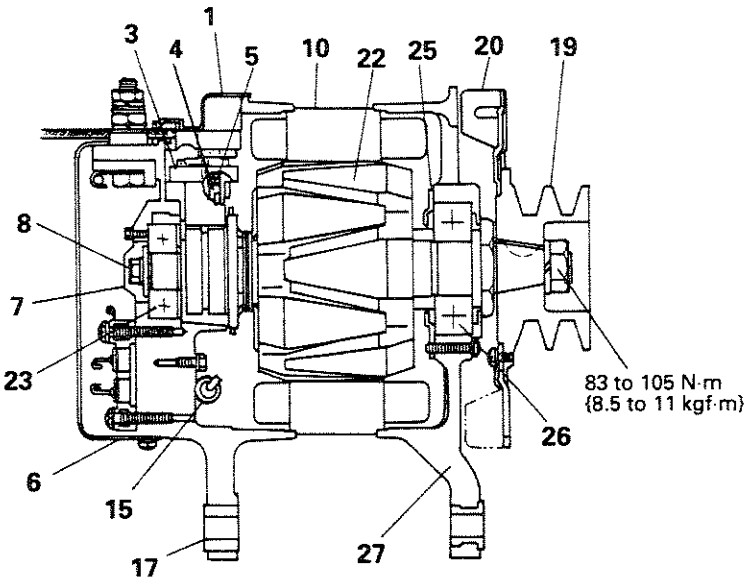

B4543A

<110A, 150A alternators>

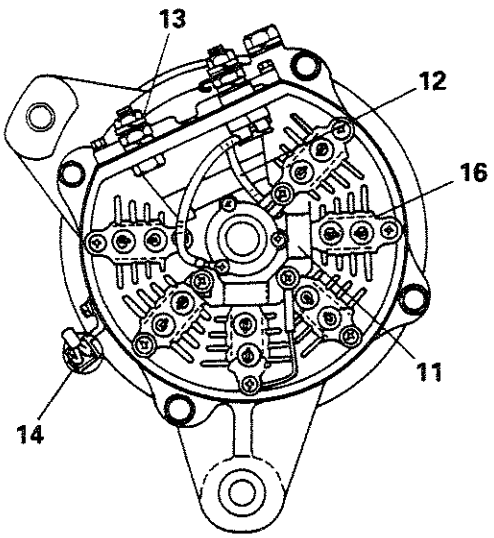

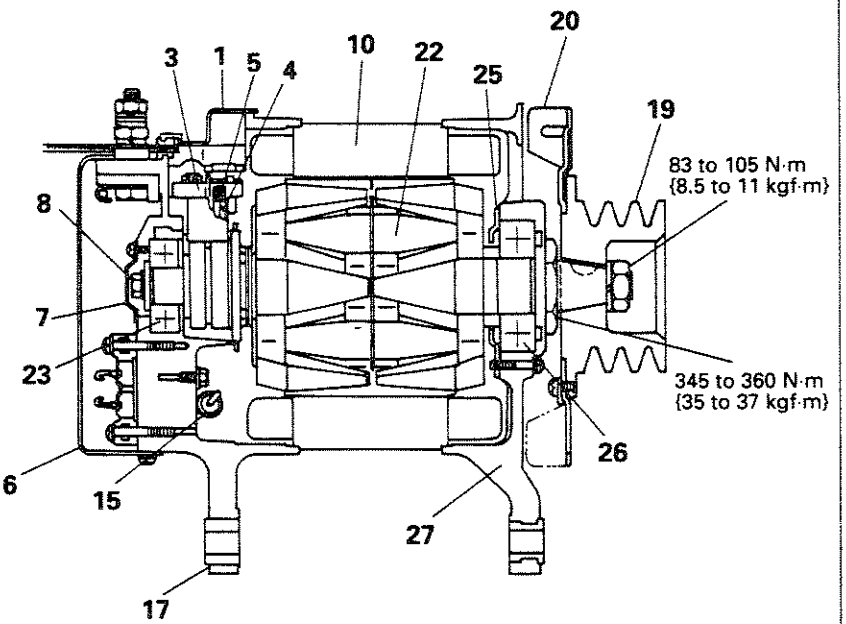

Component parts

2: 3, 4, 5,
9: 11, 12, 13, 15, 16, 17
18: 19, 20
21: 22, 23
24: 25, 26, 27

Assembly sequence

24 (27→26→25)→21 (23→22)→18 (20→19)→10→9 (17→16→15→13→12→11)→14→8→7→6→2 (5→4→3)→1

B4544A

5.7.5 Inspection and adjustment after reassembly

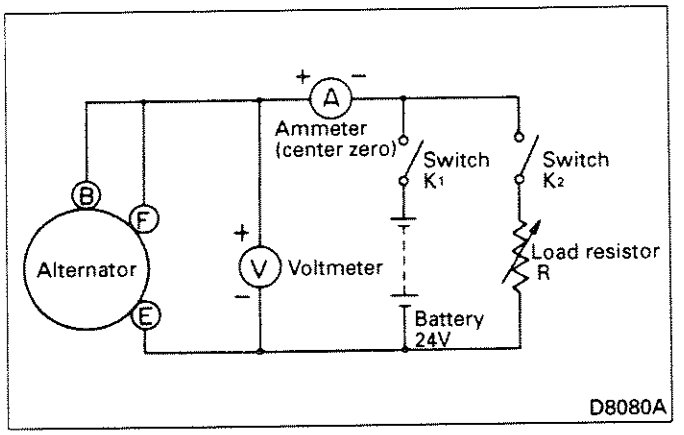

Carry out tests with the circuit connected as shown above.

Load Test

Increase the load resistance R to a maximum and close the switches K_1 and K_2. Measure the current value when the alternator reaches the specified speed.

Nominal values

		Output current
60A alternator (when cold)	2,200 rpm / 28V	60A or more
110A alternator (when cold)	2,500 rpm / 28V	100A or more
150A alternator (when cold)	2,500 rpm / 28V	140A or more

5.8 Regulator Inspection and Adjustment

(R7T01071, R7T01072)

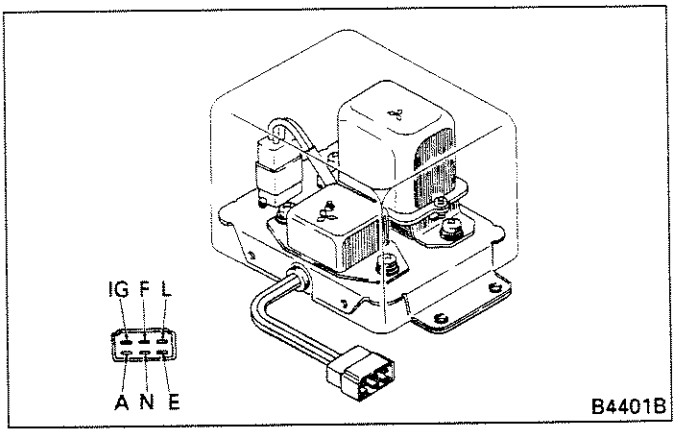

(1) Voltage regulator regulated voltage
Nominal value (between A and E terminals) at 4,000 rpm = 28 to 29 V
Battery overcharged ... Voltage too high
Battery discharged ... Voltage too low

NOTE:
This regulator uses a transistor type voltage regulator, so the regulated voltage cannot be changed. If the regulated voltage is out of the nominal value, replace the regulator.

(2) Voltage regulator regulated voltage measuring procedure

(a) Increase the engine speed until the alternator reaches the specified speed.

(b) Continue charging until the charging current to the battery falls to less than 10 A (the battery fully-charged).

(c) Measure the voltage across the "A" and "E" terminals.

(d) Measure the voltage across the "A" terminal and the negative terminal of the battery and check to ensure that there is no difference between the value and the value measured under Item (c).

(RMS4227B)

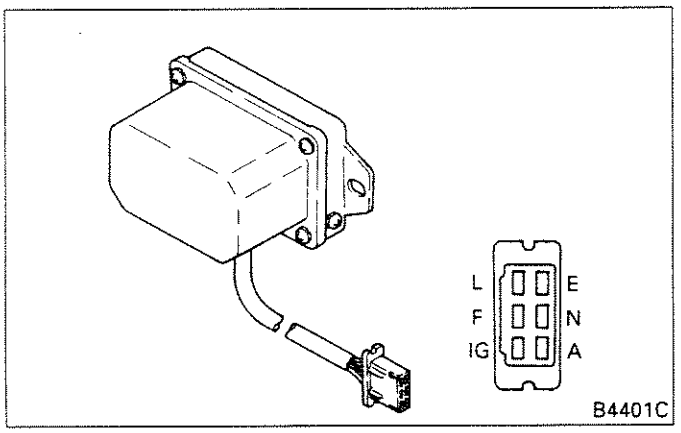

(1) Voltage regulator regulated voltage
Nominal value (between A and E terminals) at 3,000 rpm = 28 to 30 V

(2) Measure the regulated voltage in accordance with the following procedure.

(a) Start the engine and run the alternator under no load.

(b) Increase the engine speed to approximately 1,500 rpm and confirm that the battery charging current is 10A or less. (If the charging current is over 10A, allow the battery to charge until the current drops below 10A or replace the battery with a fully charged one.)

(c) Measure the voltage between terminals A and E when the alternator speed reaches 3,000 rpm.

NOTE:

If the battery is prone to overcharging, carry out a continuity test first to check whether the regulator is broken. Should the regulator not be working, the generated voltage will increase dangerously if the battery switch is opened during engine operation.

(3) Adjusting voltage regulator regulated voltage

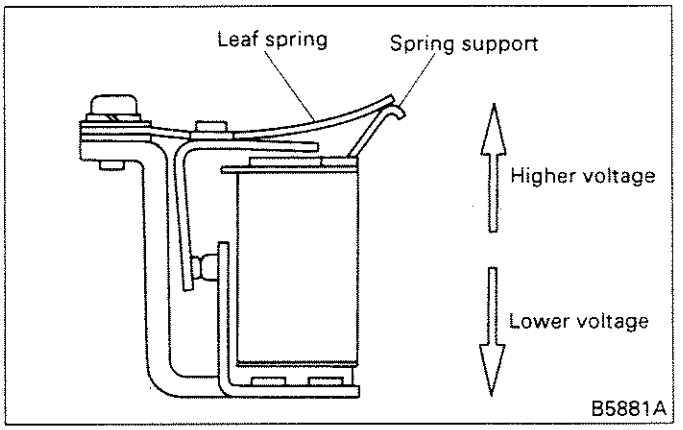

The regulated voltage is adjusted by reducing the force of the leaf spring.
Bend up the spring support to increase the regulated voltage. Bend the spring support down to decrease it.

NOTE:

- **Make sure the battery switch is open before making adjustments.**
- **After making adjustments, fit the cover and check the regulated voltage again.**
- **If the regulator is removed for adjustment, be sure to refit it facing the same direction and at the same angle as before.**

(4) Continuity tests
Without opening the cover, use a continuity tester to measure the continuity between the regulator terminals.

Measurement point	Acceptable condition	Unacceptable condition (fault)
N – E	Continuity	No continuity (open circuit in coil VC_2)
L – E	Zero resistance	Resistance (contact P_2 defective)
IG – F	34 to 42 Ω	High resistance (contact P_1 defective) No continuity (open circuit in resistor R_4)
F – E	Continuity	No continuity (open circuit in coil VC1 or resistor R_3)
IG – A	No continuity	Continuity (contact P_3 fused together)
Resistor R_1	57 to 67 Ω	–
Resistor R_3	93 to 107 Ω	–
Resistor R_4	34 to 42 Ω	–

NOTE:
When measuring between terminals F and E, apply the negative probe of the tester to terminal F and positive probe to terminal E.

(R8T10178)

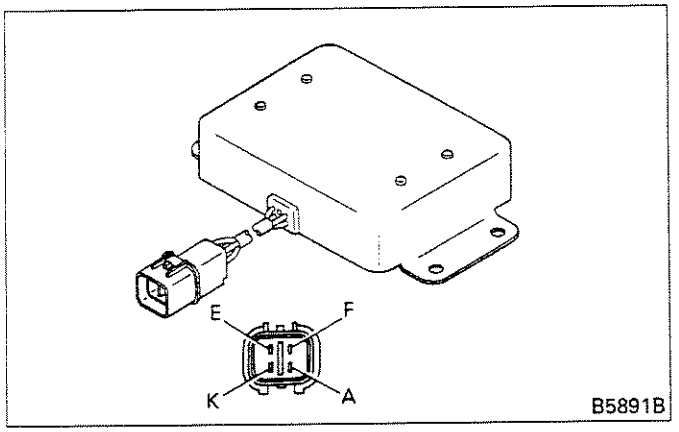

Since the regulator is transistorized, its regulated voltage cannot be changed. If the regulated voltage does not conform with the specified nominal value, replace the regulator.

Measure the regulated voltage in accordance with the following procedure.

(1) Increase the engine speed until the alternator turns at the specified speed (3,000 rpm).
(2) Allow the battery to charge until the charging current is 10A or less. (When the charging current reaches this level, the battery is fully charged.)
(3) Measure the voltage between terminals A and E.
(4) Measure the voltage between terminal A and the battery's (–) terminal. Confirm that this voltage is the same as the voltage across terminals A and E. The regulated voltage should be 28 to 29V.

NOTE:
While taking measurements, do not turn the battery switch OFF, disconnect the battery, or make connections to any terminals.

5.9 Safety Relay Inspection

<R8T30171, R8T30172, R8T30174, R8T30274>

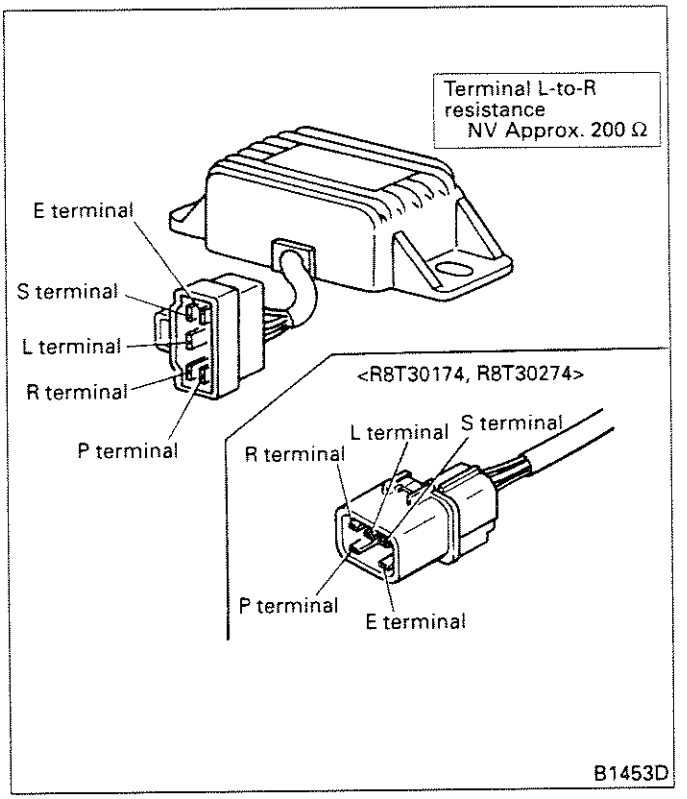

Measure voltage at each terminal in the sequence shown below to identify faulty parts.

(a) On-vehicle test

Sequence	Engine operation	Voltage at terminal "P"	Voltage at terminal "S"	Voltage at terminal "R" or "L"
1	Starter switch ON	• 1 V or less • (+) diode shorted if close to battery voltage		Terminal "R" • Approx. 24 V • If 0 V, wiring is faulty Terminal "L" (with charge lamp) • Approx. 24 V Terminal "L" (with charge lamp) • Approx. 3 V or less • If close to battery voltage, wiring alternator is faulty
2	During cranking		• Approx. 1 V or less • If close to battery voltage, safety relay is faulty (cranking impossible)	
3	Idling (600 rpm or higher)	• Approx. 13 to 16 V (Be sure to use analog type tester)	• A bulb connected between battery and terminal "S" does not come on • If bulb comes on despite normal terminal "P" voltage (shown to left), replace safety relay and test again	

(b) Component test

The resistance value between terminals "R" and "L" shall be within specified range.

5.10 Preheater

5.10.1 Intake air heater

(1) Removal and installation
(Refer to Group 15 Intake and Exhaust.)

(2) Inspection

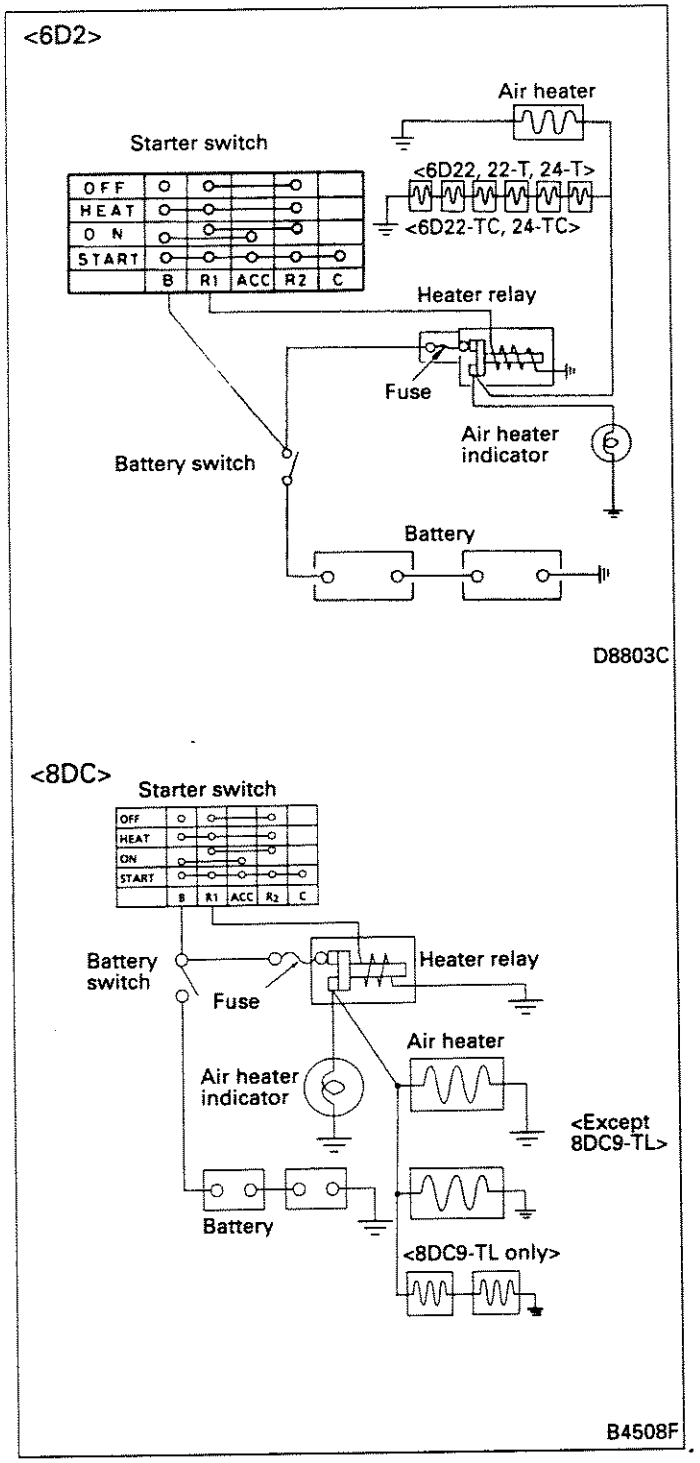

Perform the following inspection and check the function of each part or the wiring if necessary.

(a) Time required before indicator becomes red-hot:
Standard time: 40 to 60 seconds

(b) Check each terminal of the air heater for looseness and the heater element for damage and contact with other parts.

5.10.2 Heater relay

Inspection

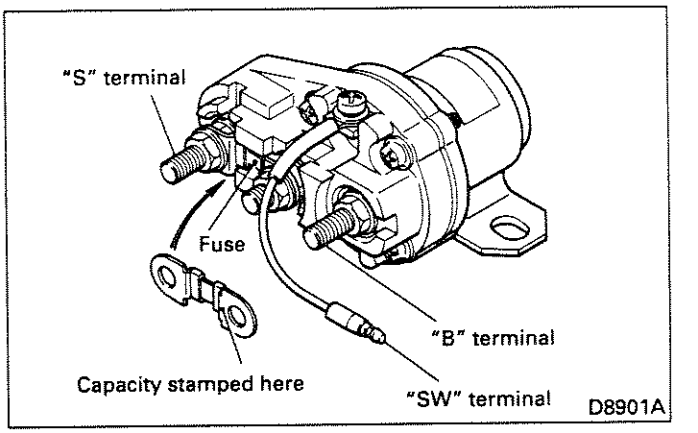

(1) Check to ensure that there is continuity between the terminals "B" and "S" when 2.3 A (24 V) exciting current is applied between terminal "SW" in the figure and body ground.

(2) Check also the heater relay fuse and replace with new one if it has been burnt out.
When replacing fuses, be sure to use a fuse of specified capacity.

5.11 Automatic Stop System

5.11.1 Shut down type

(1) Adjustment and inspection of stop solenoid

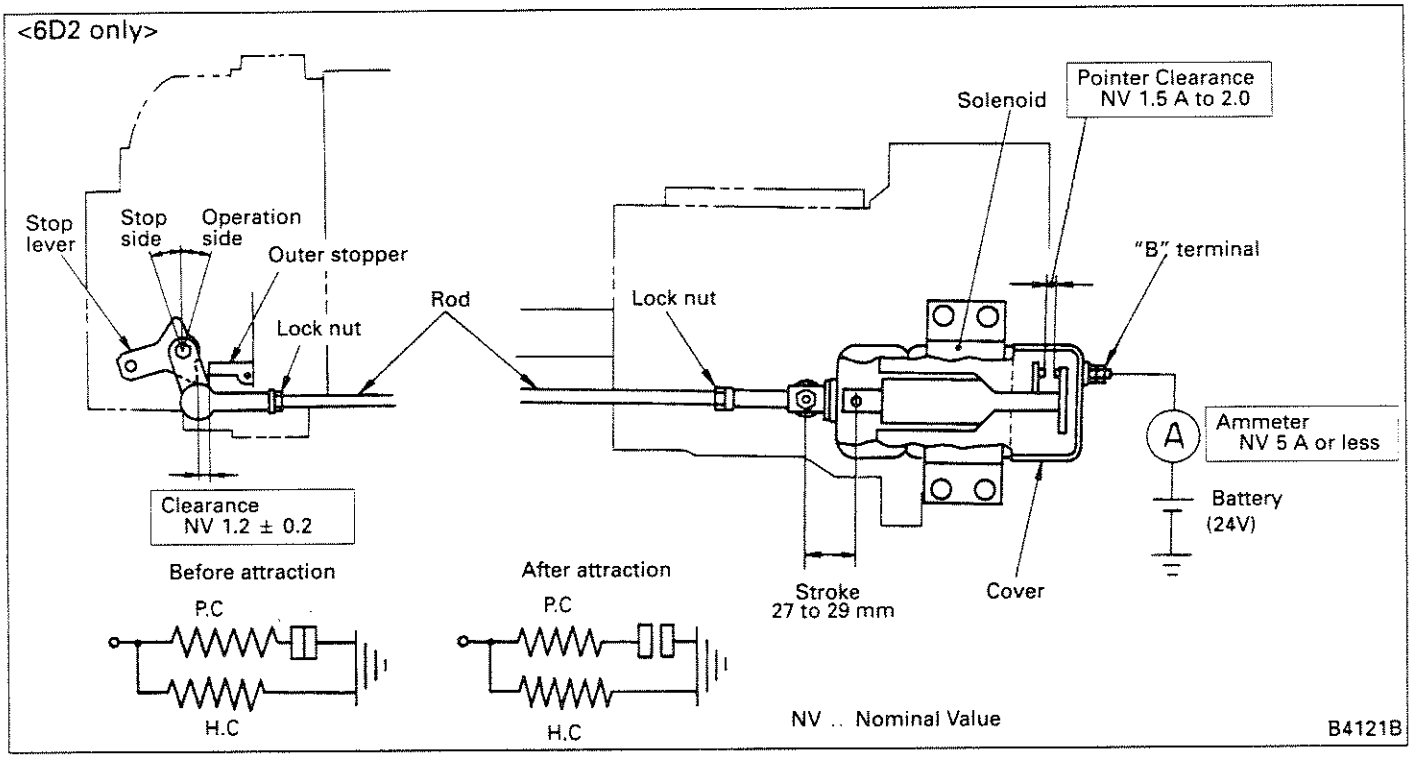

(a) Adjustment of stroke

1) Connect the rod between the stop lever and the solenoid.
2) Remove the solenoid cover.
3) Turn the battery switch ON to actuate the solenoid. Then, make the following adjustments:
- Make sure that the solenoid pointer gap does not exceed the nominal value.
- Adjust the length of the rod until a clearance not exceeding the nominal value is maintained between the stop lever and the outer stopper.
4) Turn the battery switch OFF.

(b) Operational check

1) After the adjustment described in 1) above, repeat the ON-OFF operation of the solenoid 2 to 3 times (at approx. 10-second intervals) and perform the following.
- Make sure that the stop lever, rod and solenoid operate smoothly from the operation side to the stop side and also from the stop side to the operation side.
- Make sure that the clearance between the stop lever and the outer stopper and the solenoid pointer gap do not exceed the respective nominal values.
2) Tighten the lock nut on each end of the rod securely.
3) Install the solenoid cover.
4) As to the check of amperage when the solenoid is ON, be sure that an amperage of nominal value is indicated by the ammeter.

(2) Solenoid relay

(a) Unit test

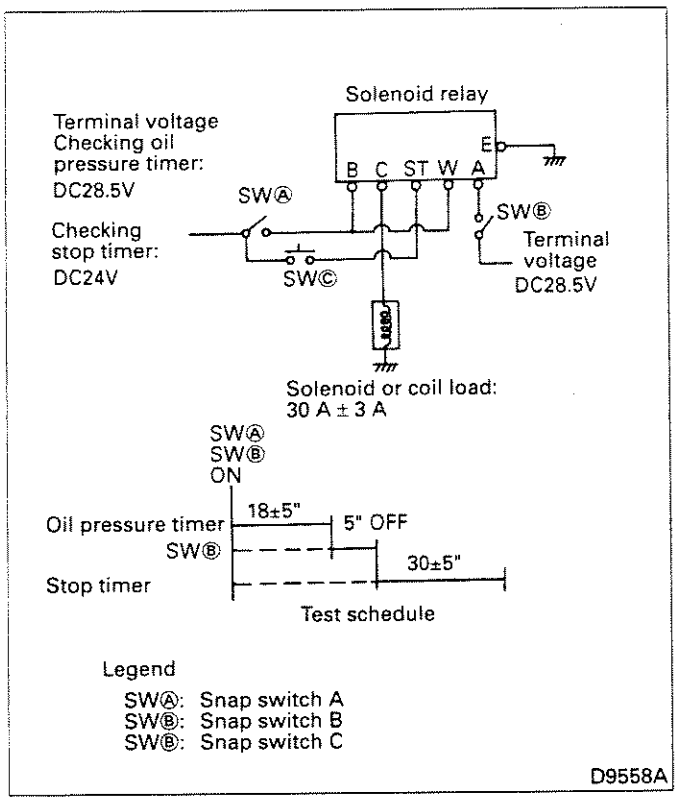

Make connections as shown above and perform the following checks.

1) Oil pressure timer
   Set the snap switch A to ON. Operate a stop watch as soon as the snap switch B is set to ON, and measure the time required before the solenoid is operated.
2) Stop timer
   Set the snap switch B to OFF 5 seconds after the solenoid has been operated. At the same time, using a stop watch, measure the time required before the solenoid is reset.
   The snap switch B is set to OFF 5 seconds after operation of the solenoid because if the solenoid is operated, it takes 5 seconds before the alternator voltage disappears.
3) Manual stop timer
   When the push switch C (stop switch) is set to ON, the solenoid will be operated. Operate a stop watch as soon as the stop switch C is set to OFF, and measure the time required before the solenoid is reset.
   After the tests of the above items 1) and 2), allow 5 minutes before making retests. It takes 5 minutes before the capacitor C_1 which is an element of the time constant of the oil pressure timer finishes discharging.

(b) On-vehicle inspection

Check the solenoid relay according to the following flowcharts and determine whether it is good or not on the basis of the terminal voltage, etc. measured in the individual states.

- The terminal symbols denote those of the solenoid relay.
- The voltage 24 V means the battery voltage.

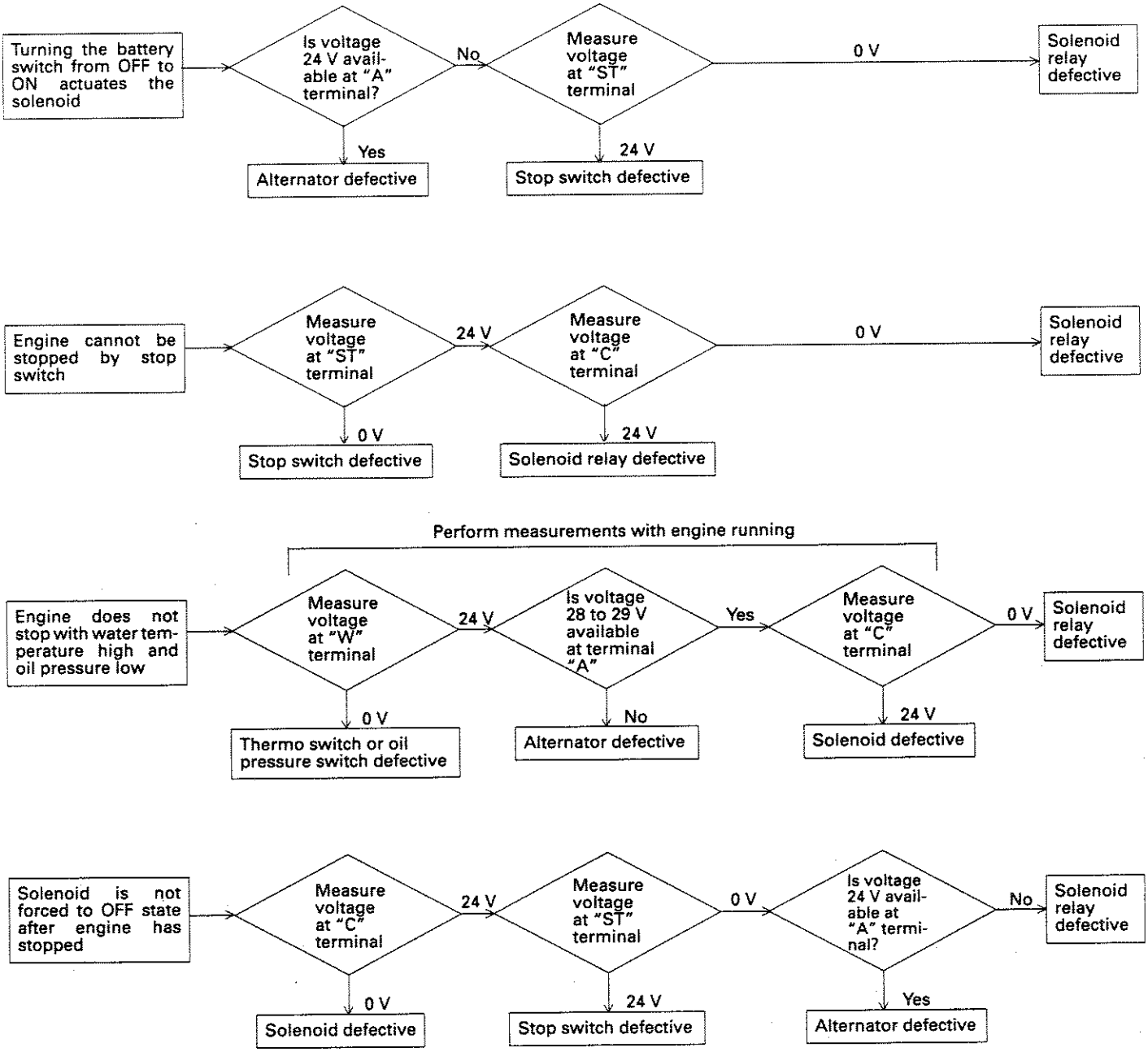

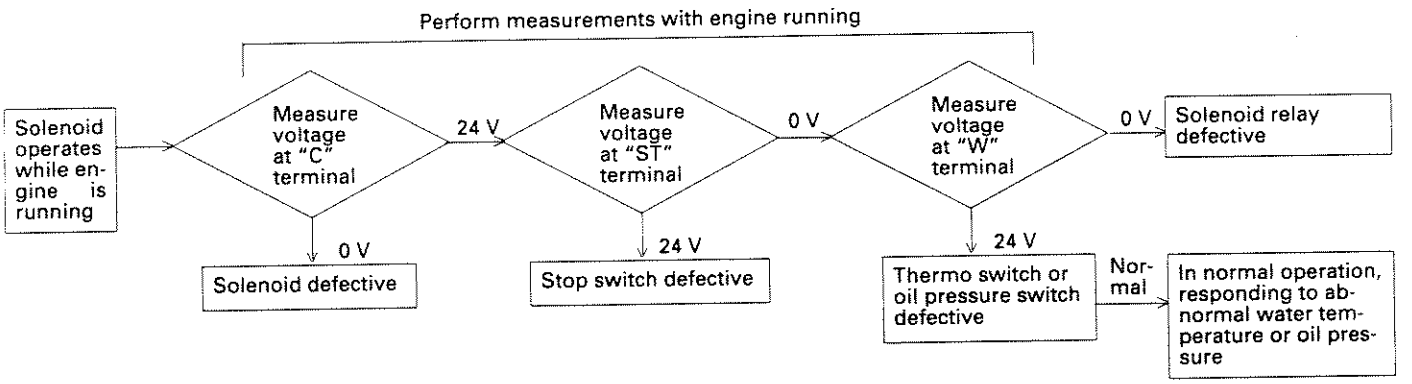

(3) Thermo switch

The thermo switch won't operate if the temperature-sensing portion is not in contact with coolant. If the coolant level is low or if there is only steam, the thermo switch won't operate completely.

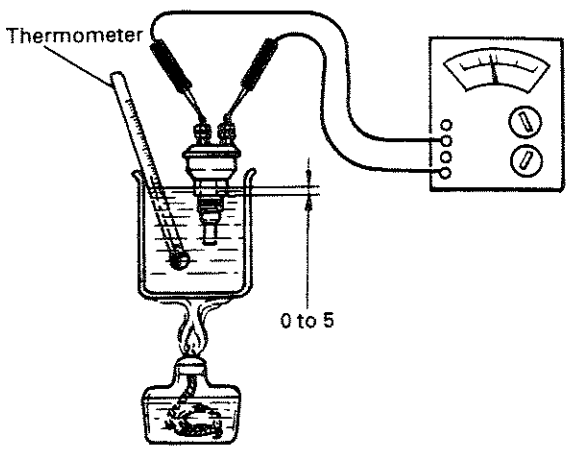

Item	NV	Remarks
Operating temperature	93 to 97 °C	Tap water cooling type
	99 to 103 °C	Radiator cooling type
ON–OFF difference	Within 7°C	

NV .. Nominal Value

B5329A

Inspection

(a) Set a circuit tester to measure resistance, then apply its probes to the thermostatic switch terminals. Put the thermostatic switch into glycerin up to the end of its threaded section.

(b) Confirm that there is no continuity between the terminals, then begin heating the test fluid.

NOTE:

Stir the liquid to ensure that it heats up uniformly.

(c) Measure the fluid temperature when the thermostatic switch operates and continuity appears between its terminals.

NOTE:

Increase the fluid temperature very slowly as it approaches the operating temperature of the thermostatic switch. (When the fluid temperature is 5°C below the operating temperature, maintain this temperature for 5 minutes. Then, increase the temperature by 1°C every 2 to 3 minutes.)

(d) Briefly continue increasing the fluid temperature, then allow the fluid to cool. Measure the fluid temperature when the thermostatic switch operates and continuity between its terminals disappears. Calculate the difference between the upper and lower operating temperatures, and check that it is correct.

(4) Oil pressure switch

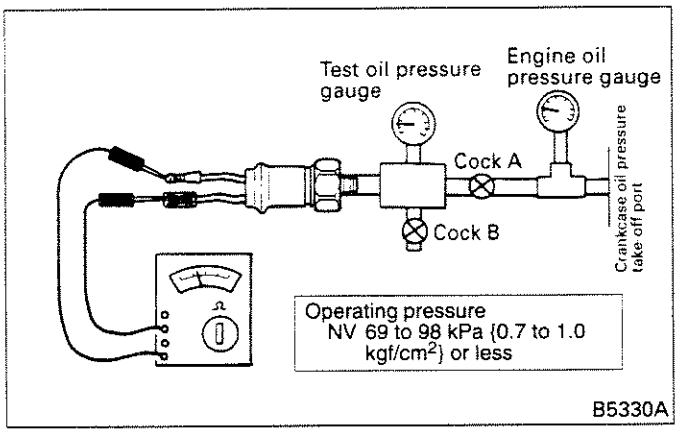

Inspection

(a) Connect the pipes as shown in the above illustration. Then, set a tester to measure resistance and apply its probes to the oil pressure switch terminals.

(b) With cocks A and B closed, start the engine. When the oil pressure increases, fully open cock A to apply pressure to the oil pressure switch.

(c) Close cock A to cut the oil passage from the engine and maintain the accumulated pressure in the oil sump.

(d) Confirm that there is no continuity between the oil pressure switch terminals.

(e) Gradually open cock B to reduce the oil pressure. Observe the test oil pressure gauge indication when the oil pressure switch operates and continuity appears between its terminals.

5.11.2 Run-on type

(1) Stop solenoid

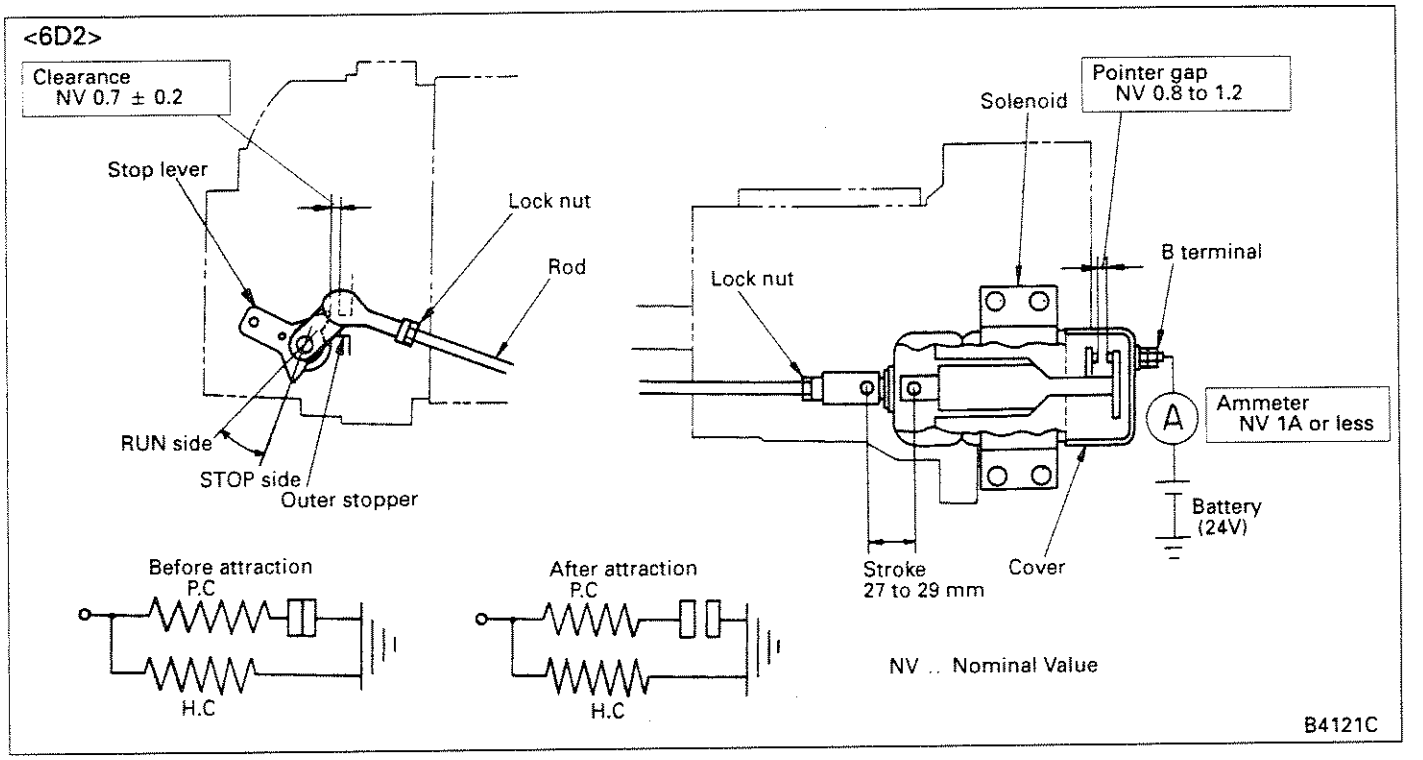

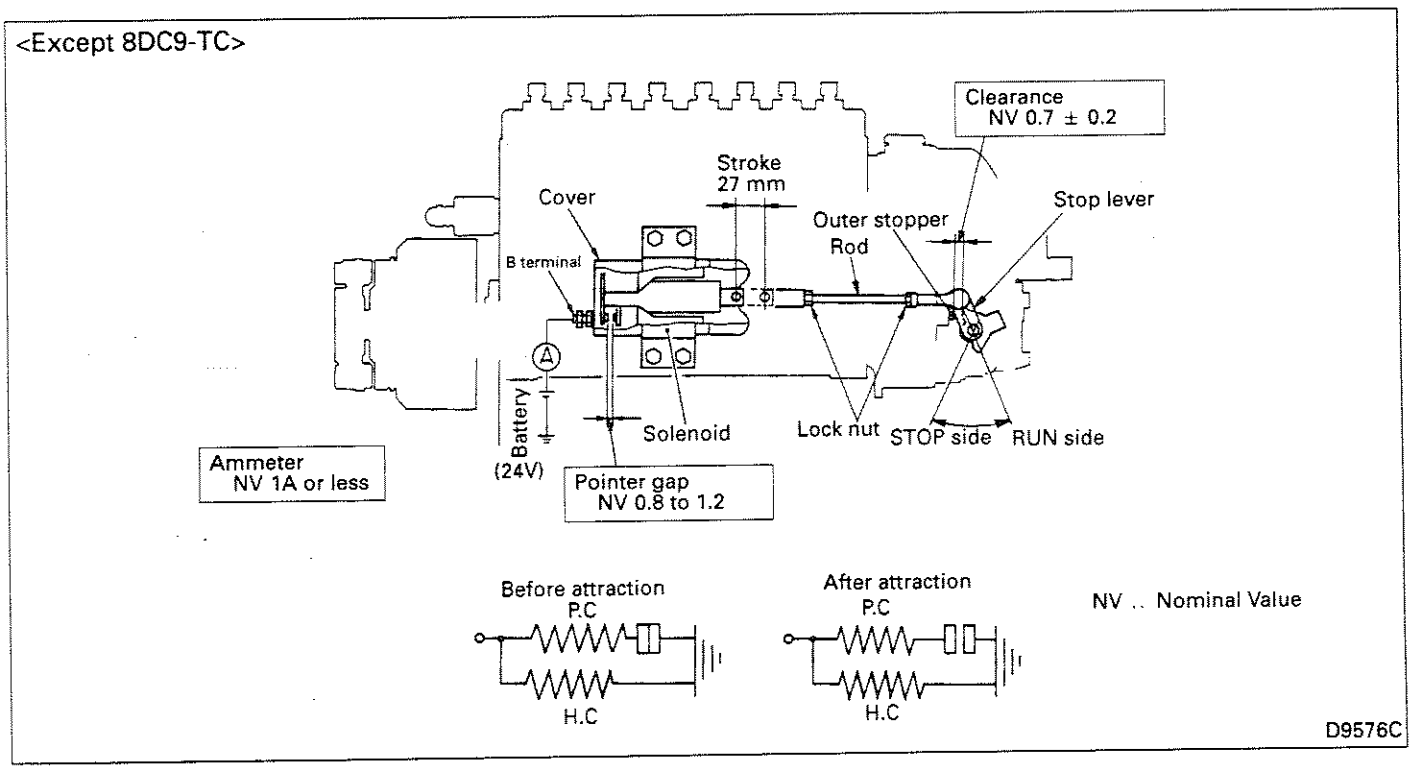

(a) Adjustment of stroke

1) Connect the rod between the stop lever and the solenoid.
2) Remove the solenoid cover.
3) Turn the battery switch ON to actuate the solenoid, then make the following adjustments:
- Confirm that the solenoid pointer clearance conforms with the specified nominal value.
- Adjust the rod length such that the stop lever-to-outer stopper clearance conforms with the specified nominal value. Temporarily tighten the lock nut at either end of the rod.
4) Turn the battery switch OFF.

(b) Operational check

1) After the adjustment described in 1) above, repeat the ON-OFF operation of the solenoid 2 to 3 times (at approx. 10-second intervals) and perform the following.
- Make sure that the stop lever, rod and solenoid operate smoothly from the operation side to the stop side and also from the stop side to the operation side.
- Make sure that the clearance between the stop lever and the outer stopper and the solenoid pointer gap do not exceed the respective nominal values.
2) Tighten the lock nut on each end of the rod securely.
3) Install the solenoid cover.
4) As to the check of amperage when the solenoid is ON, be sure that an amperage of nominal value is indicated by the ammeter.

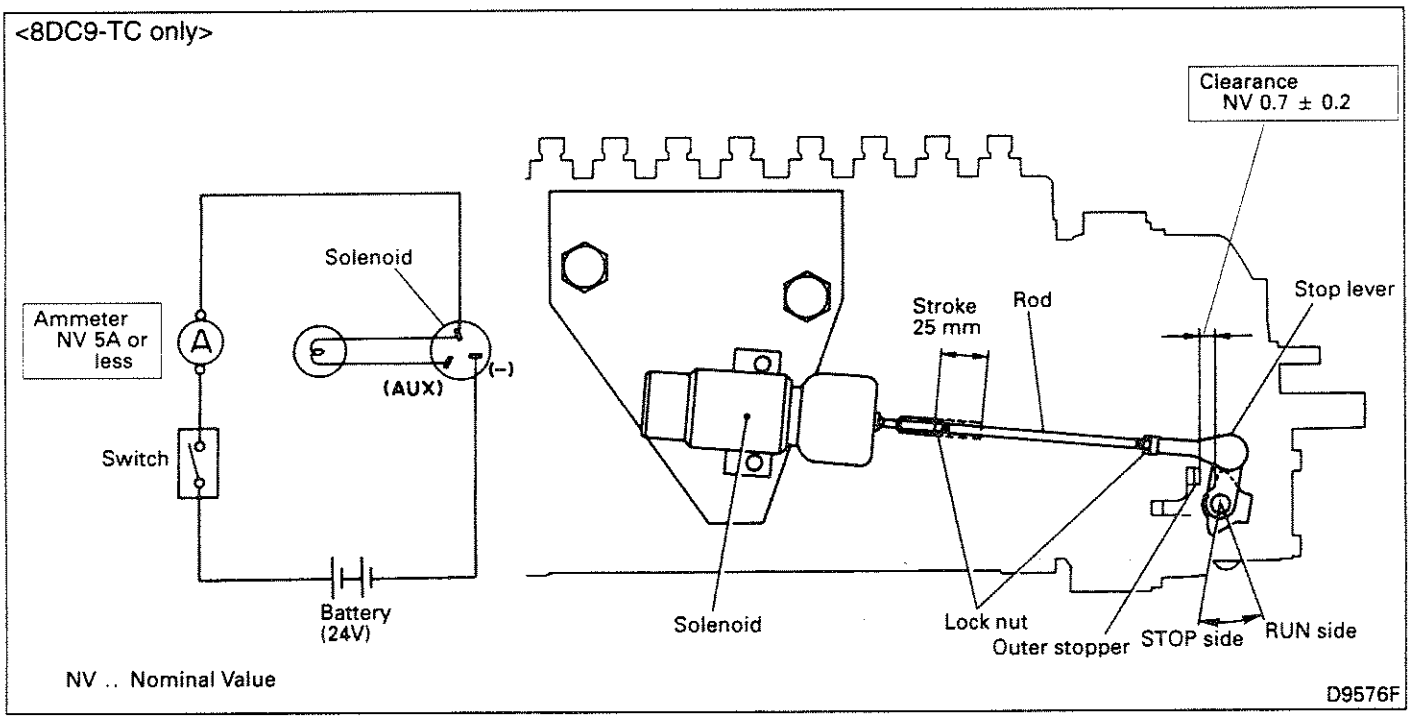

(a) Adjustment of stroke

1) Connect the stop lever and solenoid with the rod.
2) Turn the switch ON to actuate the solenoid. Then, adjust the rod length such that the stop lever-to-outer stopper clearance conforms with the specified nominal value. Temporarily tighten the lock nut at either end of the rod.
3) Turn the switch OFF.

(b) Adjustment of operation

1) After adjusting the stroke, turn the solenoid ON and OFF 2 or 3 times. Then, check the following points:
- Check that the stop lever, rod, and solenoid move smoothly between the RUN side and STOP side.
- Check that the stop lever-to-outer stopper clearance conforms with the specified nominal value.
2) Confirm that the check lamp illuminates or that the solenoid current conforms with the specified nominal value.

NOTE:
When repeatedly turning the solenoid ON and OFF, wait a moment between each switch operation.

(2) Solenoid relay

(a) Unit test

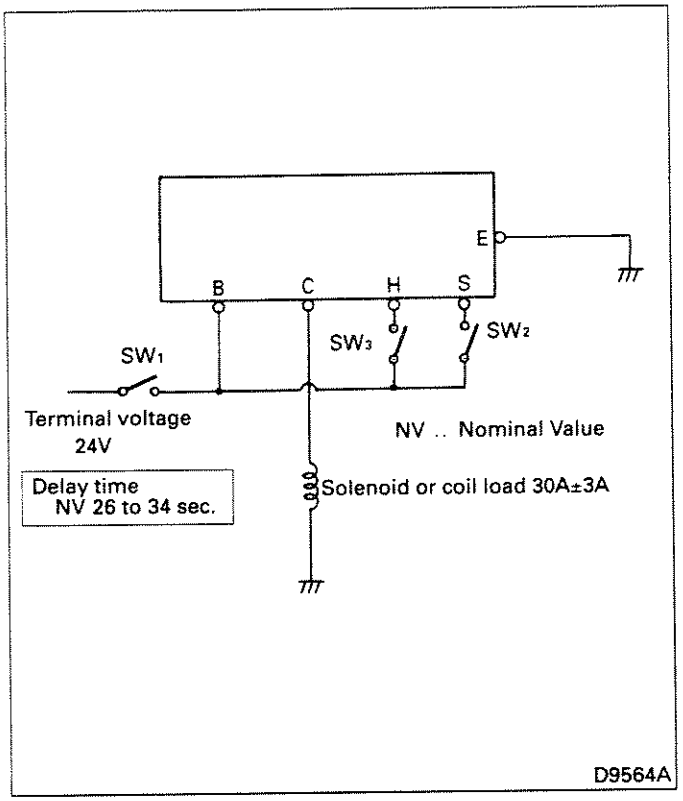

Wire as shown and check the following.

1) Relay operation and delay time

a) Check if the solenoid is energized when switches SW_1 and SW_2 are turned ON.

b) Using a stop watch, measure the time required for the solenoid to return after switch SW_2 is turned OFF.

2) Relay holding

a) Turn ON switches SW_1 and SW_2 and, after the solenoid is activated, turn ON the switch SW_3.

b) Turn OFF the switch SW_2 and make sure that the solenoid remains activated for more than 34 seconds.

c) After verifying b) above, turn OFF the switch SW_3 to ensure that the solenoid returns.

(b) On-vehicle inspection

Check the solenoid relay according to the following flowchart and determine whether it is good or not on the basis of the terminal voltage, etc. measured in the individual states.

- Terminal symbols denote those of the solenoid relay.
- Voltage 24 V means the battery voltage.

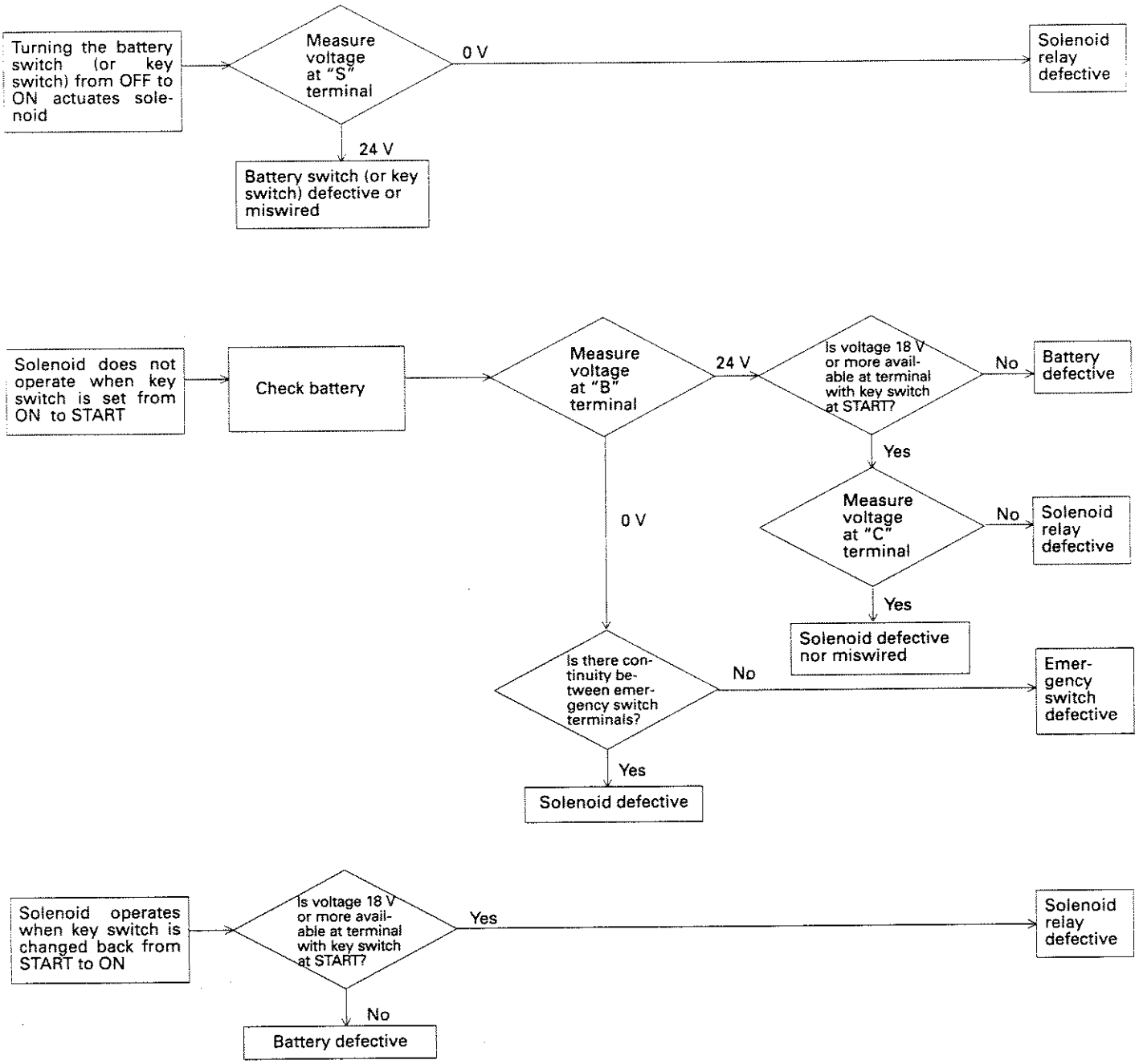

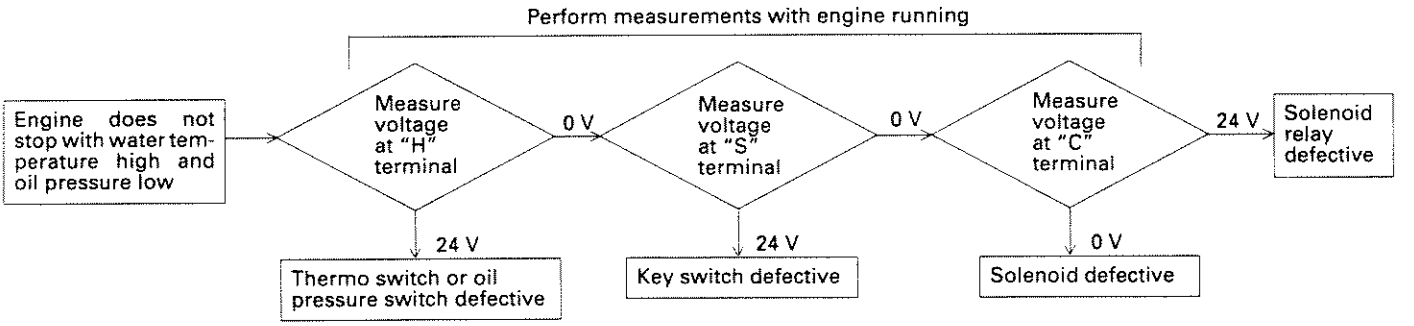
Perform measurements with engine running
Engine does not stop with water temperature high and oil pressure low
Measure voltage at "H" terminal
0 V
Measure voltage at "S" terminal
0 V
Measure voltage at "C" terminal
24 V
Solenoid relay defective
24 V
Thermo switch or oil pressure switch defective
24 V
Key switch defective
0 V
Solenoid defective

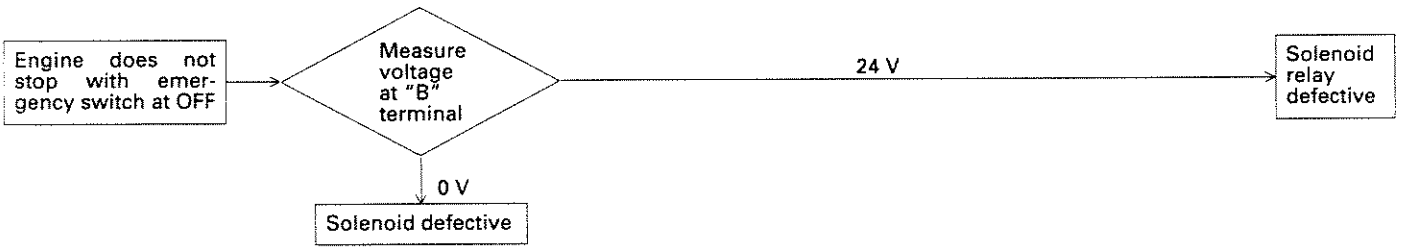
Engine does not stop with emergency switch at OFF
Measure voltage at "B" terminal
24 V
Solenoid relay defective
0 V
Solenoid defective

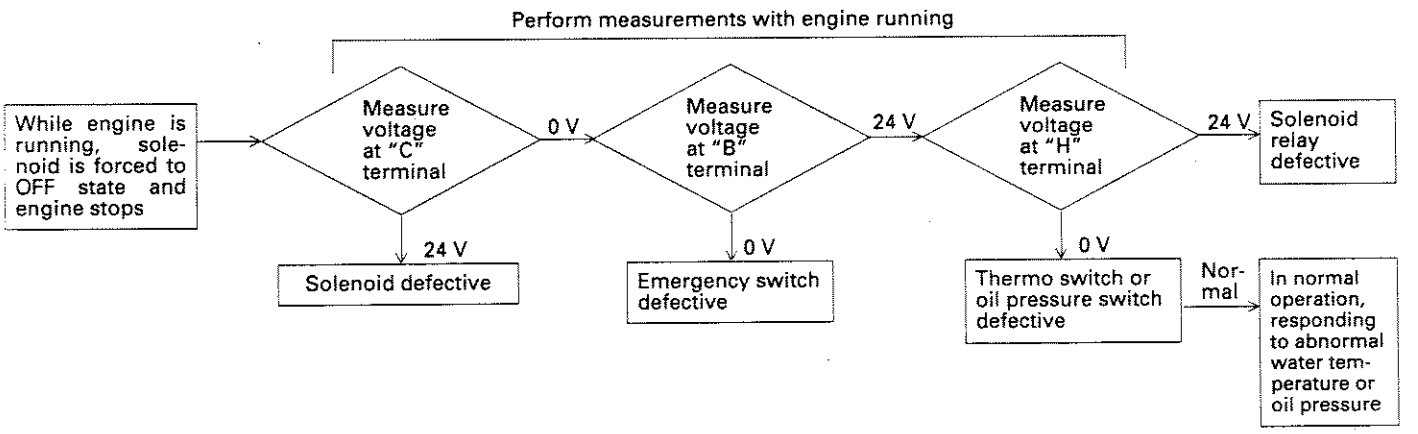
Perform measurements with engine running
While engine is running, solenoid is forced to OFF state and engine stops
Measure voltage at "C" terminal
0 V
Measure voltage at "B" terminal
24 V
Measure voltage at "H" terminal
24 V
Solenoid relay defective
24 V
Solenoid defective
0 V
Emergency switch defective
0 V
Thermo switch or oil pressure switch defective
Normal
In normal operation, responding to abnormal water temperature or oil pressure

(3) Thermo switch

The thermo switch won't operate if the temperature-sensing portion is not in contact with coolant. If the coolant level is low or if there is only steam, the thermo switch won't operate completely.

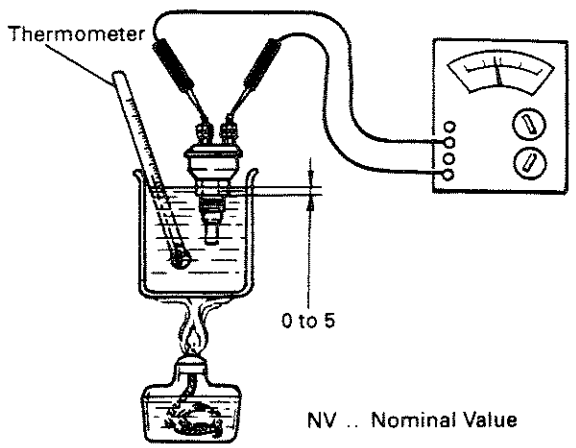

Item	NV	Remarks
Operating temperature	93 to 97 °C	Tap water cooling type
	99 to 103 °C	Radiator cooling type
ON–OFF difference	Within 7°C	

B5329A

Inspection

(a) Set a circuit tester to measure resistance, then apply its probes to the thermostatic switch terminals. Put the thermostatic switch into glycerin up to the end of its threaded section.

(b) Confirm that there is no continuity between the terminals, then begin heating the test fluid.

NOTE:

Stir the liquid to ensure that it heats up uniformly.

(c) Measure the fluid temperature when the thermostatic switch operates and the continuity between its terminals disappears

NOTE:

Increase the fluid temperature very slowly as it approaches the operating temperature of the thermostatic switch. (When the fluid temperature is 5°C below the operating temperature, maintain this temperature for 5 minutes. Then, increase the temperature by 1°C every 2 to 3 minutes.)

(d) Briefly continue increasing the fluid temperature, then allow the fluid to cool. Measure the fluid temperature when the thermostatic switch operates and continuity appears between its terminals. Calculate the difference between the upper and lower operating temperatures, and check that it is correct.

(4) Oil pressure switch

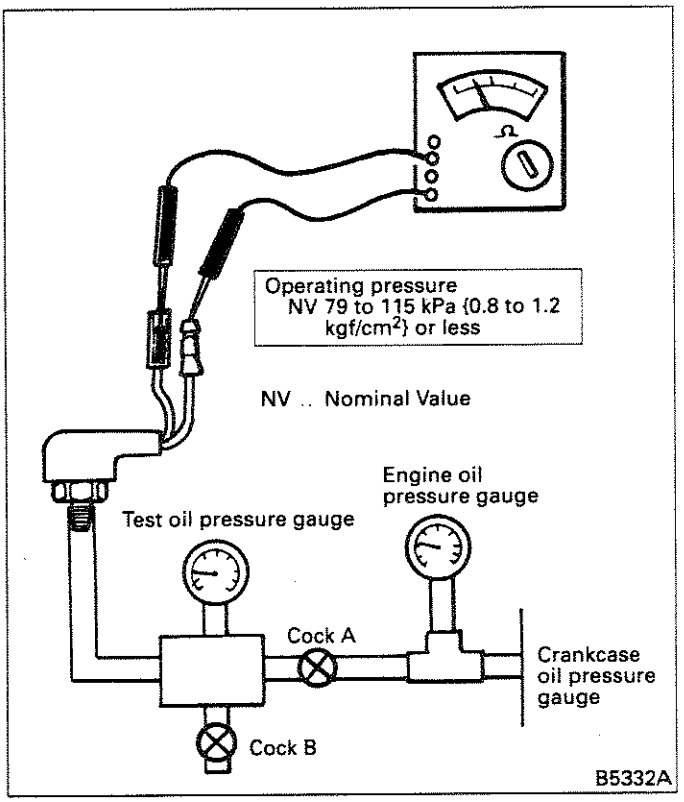

B5332A

Inspection

(a) Connect the pipes as shown in the above illustration. Then, set a tester to measure resistance and apply its probes to the oil pressure switch terminals.

(b) With cocks A and B closed, start the engine. When the oil pressure increases, fully open cock A to apply pressure to the oil pressure switch.

(c) Close cock A to cut the oil passage from the engine and maintain the accumulated pressure in the oil sump.

(d) Confirm that there is continuity between the oil pressure switch terminals.

(e) Gradually open cock B to reduce the oil pressure. Observe the test oil pressure gauge indication when the oil pressure switch operates and the continuity between its terminals disappears.

6. TROUBLESHOOTING

Symptom	Probable cause	Remedy	Ref. group
Starter will not start	Defective battery or low capacity	Replace or charge	
	Defective wiring • Defective starter wiring • Defective starter relay wiring • Defective magnetic switch wiring • Defective heater relay wiring • Defective starter switch wiring • Defective battery or battery switch wiring	Correct	
	Defective magnetic switch Defective starter relay Worn or damaged binding brush	Replace	
	Defective motor	Replace armature or yoke	
	Defective overrunning clutch Defective heater relay Defective starter switch	Replace	
Starter starts but engine does not	Pinion not meshing with ring gear • Incorrect voltage at magnetic switch "S" terminal • Incorrect voltage at starter relay "SW" terminal	Replace starter relay or starter switch	
	• Worn or damaged pinion	Replace	
	• Worn or damaged ring gear	Replace	Group 11
	Pinion meshes with ring gear but does not turn • Defective battery or insufficient battery voltage	Charge or replace battery	
	• Insufficient brush contact	Replace brush and/or brush spring	
	• Defective overrunning clutch	Replace	
Alternator is functioning normally but battery is overdischarged	Low V-belt tension	Adjust	Group 14
	Damaged V-belt	Replace	
	Defective wiring • Defective alternator wiring	Correct	
	Defective battery	Replace	

Symptom25	Probable cause	Remedy	Ref. group
Battery is normal but is overdischarged	Defective alternator • Open circuit in stator coil • Stator coil and core grounded • Slip ring and rotor core grounded (excluding brushless alternators) • Defective field coil • Worn slip ring (excluding brushless alternators) • Worn brush (excluding brushless alternators) • Defective brush spring (excluding brushless alternators) • Defective rectifier • Defective regulator	Replace	
Charge lamp does not come on when engine is stopped (starter switch ON)	Defective regulator	Replace	
Premature loss of battery electrolyte High battery electrolyte temperature	Defective alternator (See "Battery is normal but is overdischarged".) Defective regulator	Replace	
Engine is hard to start	Defective wiring • Defective air heater wiring • Defective heater relay wiring • Defective water temperature sensor wiring	Correct	
	Defective heater relay or blown fuse	Replace	

CLUTCH

CONTENTS

1. GENERAL 2
2. SPECIFICATIONS 3
3. SERVICE STANDARDS 4
3.1 Service Standards Table 4
3.2 Tightening Torque Table 4
4. SPECIAL TOOL 5
5. SERVICE PROCEDURE 6
5.1 Removal and Installation 6
5.2 Clutch Proper 9
5.2.1 Disassembly and inspection 9
5.2.2 Reassembly 13
5.3 Bearing Case 15
5.3.1 Disassembly and inspection 15
5.3.2 Reassembly 16
6. TROUBLESHOOTING 17

1. GENERAL

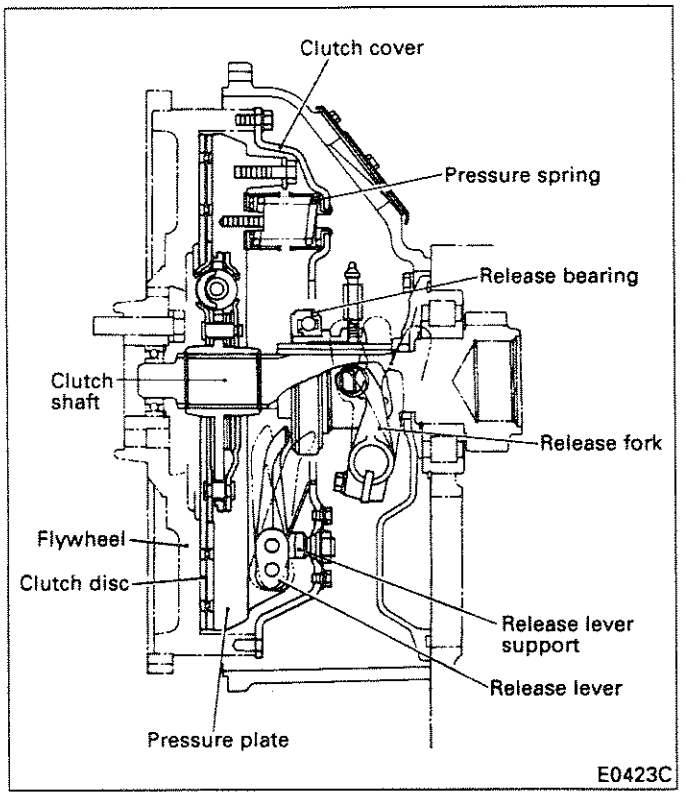

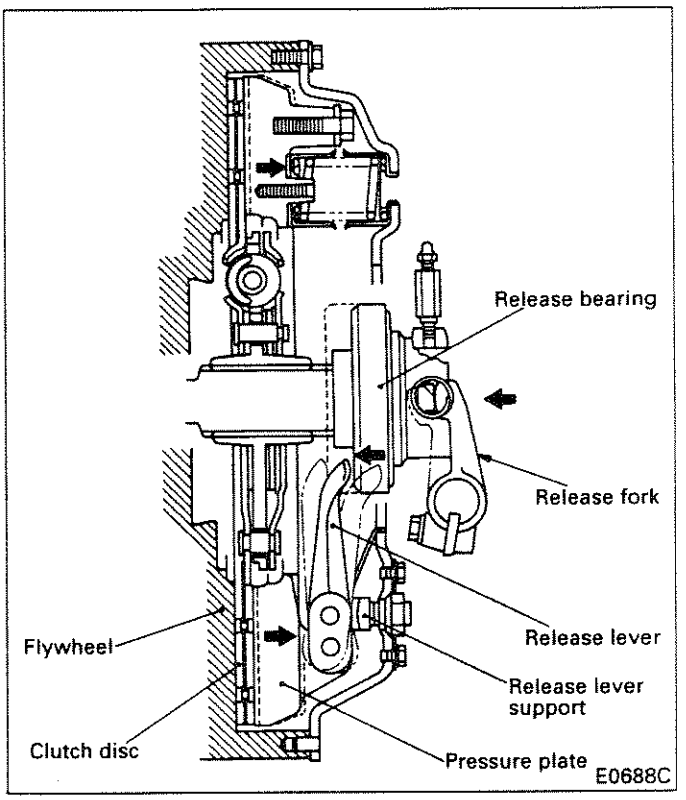

The clutch consists of a clutch disc to transmit engine power to the bearing case and a pressure plate to press the clutch disc against the engine flywheel.
When the clutch lever is in the released state, the force of the pressure springs act on the pressure plate. The clutch disc is pressed against the flywheel by the pressure plate.
The clutch disc pressed against the flywheel turns with the flywheel and transmits power to the clutch shaft in the bearing case.

When the clutch lever is operated, the release fork will push forward the release bearing. The release bearing will then push the inner end of the release lever which pivots on the release lever support pin. The outer end of the release lever is connected to and will pull the pressure plate away from the flywheel.
At this time, there will be a clearance between the clutch disc and flywheel. The engine power will not be sent to the bearing case.

2. SPECIFICATIONS

(1) Clutch

Item \ Engine model		6D22	6D22, 6D22-T, 6D22-TC, 8DC9, 8DC9-T
Model		C10W41	C12W43
Clutch drive		Strap drive	
Type		Dry single disc coil spring type	
Facing	Material	Woven	
	O.D. x I.D. (mm)	410 x 250	430 x 250
Pressure plate type		Coil spring	

(2) Bearing case

Item \ Engine model	6D22, 6D22-T, 6D22-TC, 8DC9, 8DC9-T
Type	Direct-coupled type
Model	PC12

3. SERVICE STANDARDS

3.1 Service Standards Table

Unit: mm

Maintenance item			Nominal value (Basic diameter in [ ])	Limit	Remedy and remarks
Clutch proper					
Clutch disc	Depth from facing surface to rivet head		2.2 to 2.8	0.2	Replace
	Flatness		0.6 or less	–	Correct or replace
	Lateral runout		1.2 or less	–	
	Vertical runout	C10W41	1.0 or less	1.5	
		C12W43	1.2 or less		
	Clearance of hub spline turning direction		0.06 to 0.195	0.42	Replace
Pressure plate	Thickness		59.7 to 59.9	56.8	Replace
	Flatness		0.05 or less	0.2	Correct or replace
	Strap bolt fitting hole		12.21 to 12.22	12.5	Replace
	Clearance between strap plate and strap bolt		[12.2] 0.01 to 0.11	0.3	Replace
Pressure spring	Free length	C10W41	99.5	–	Replace
		C12W43	92.1	–	
	Installed load (Installed length: 63)	C10W41	1200 to 1330 N {122.6 to 135.4 kgf}	1070 N {109 kgf}	
		C12W43	1420 to 1570 N {145 to 160.2 kgf}	1270 N {129 kgf}	
	Spring squareness (In free length state)	C10W41	3.5 or less	5.2	Replace
		C12W43	3.2 or less	4.8	
Release lever height (Dimension from clutch cover top surface)			36.5 to 37.5 (Difference among four levers: 0.7 or less)	–	Adjust
Clearance between release lever pin and bushing			[12.7] 0.06 to 0.15	0.3	Replace
Bearing case					
Clearance between release fork shaft and needle roller bearing			[30] 0.03 to 0.08	0.2	Replace

3.2 Tightening Torque Table

Location tightened	Screw size O.D. x pitch (mm)	Tightening torque N·m {kgf·m}
Strap bolt	M12 x 1.5	39 to 49 {4 to 5}
Lock plate mounting bolt	M8 x 1.25	9.8 to 15 {1 to 1.5}
Pressure plate and lever assembly mounting bolt	M10 x 1.5	32 to 49 {3.3 to 5.0}
Bearing case mounting bolt	M16 x 2.0	140 {14.2}

4. SPECIAL TOOL

Unit: mm

Tool name	Shape
Clutch Alignment Arbor 03726-21000 <C10W41, C12W43> 43490-00100 <C12W43: for disc with 12 splines> Alignment of clutch disc at installation	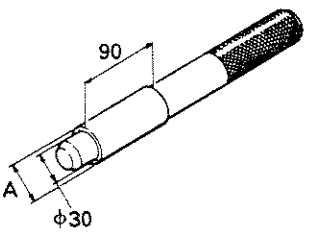 Part No. / Dimension A 03726-21000 / ϕ42 43490-00100 / ϕ36 08903
Clutch Installer MH061331 Removal and installation of clutch cover	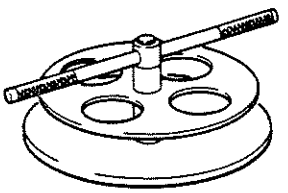 01306

Unit: mm

Tool name	Shape
Clutch Lever Aligner MH061330 Adjustment of release lever height	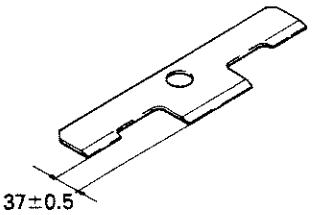 E0013A
Needle Roller Bearing Installer 44590-12600 Installation of needle roller bearing of bearing case	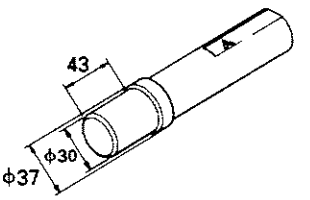 09326

5. SERVICE PROCEDURE

5.1 Removal and Installation

(1) Removal

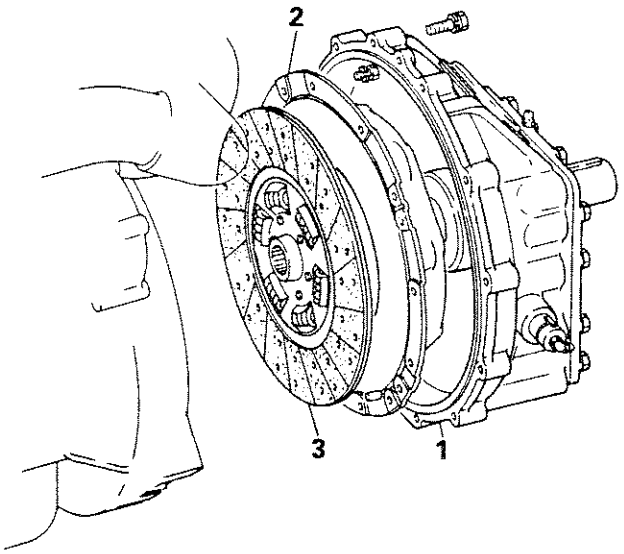

1 Bearing case assembly
2 Pressure plate & lever assembly
3 Clutch disc assembly

E0755A

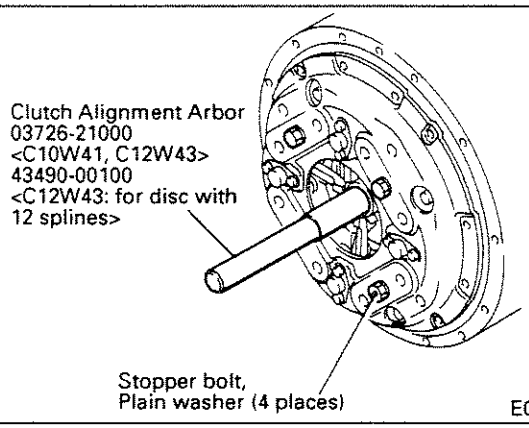

E0119B

When removing the pressure plate and lever assembly, secure the pressure plate with Stopper Bolt and Plain Washer (special tools).
Before removing the pressure plate and lever assembly, install Clutch Alignment Arbor (special tool) to prevent the clutch disc from dropping.

NOTE:

1. **Before removing the clutch, be sure to install the stopper bolt and plain washer to prevent the strap plate from being damaged.**
2. **Use the stopper bolt (M10 x 1.25 – 85 with effective length 30 mm or more) and plain washer (for M12 threads) commercially available.**

(2) Installation

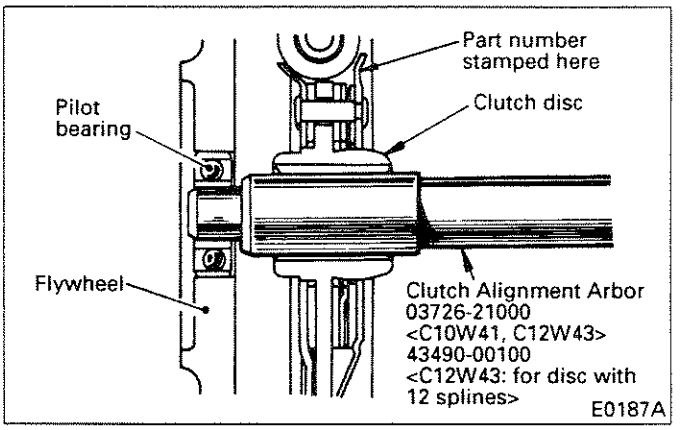

E0187A

(a) Install the clutch disc using Clutch Alignment Arbor (special tool).

NOTE:
When installing the clutch disc, make sure that it is installed in the correct direction: install it so that its side with the part number stamped is visible.

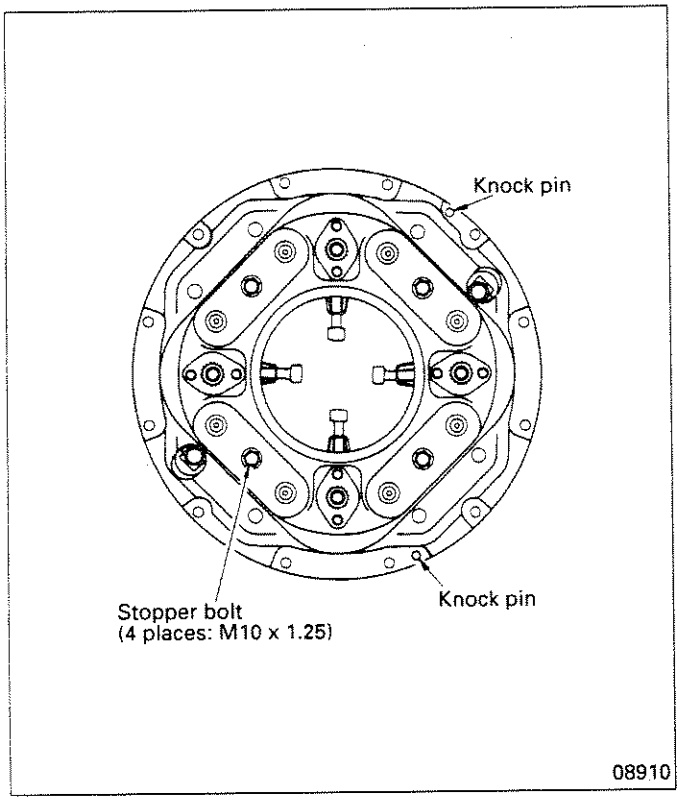

(b) Secure the pressure plate of the pressure plate and lever assembly with the stopper bolts, then install the clutch, aligning it with the knock pins in the flywheel.

NOTE:

1. **Before installing the clutch, check and clean the flywheel and repair or replace as necessary.**
2. **Tighten bolts evenly, in the diagonal order.**
3. **After installation, be sure to remove the set bolt.**

(c) Inspection of release lever height

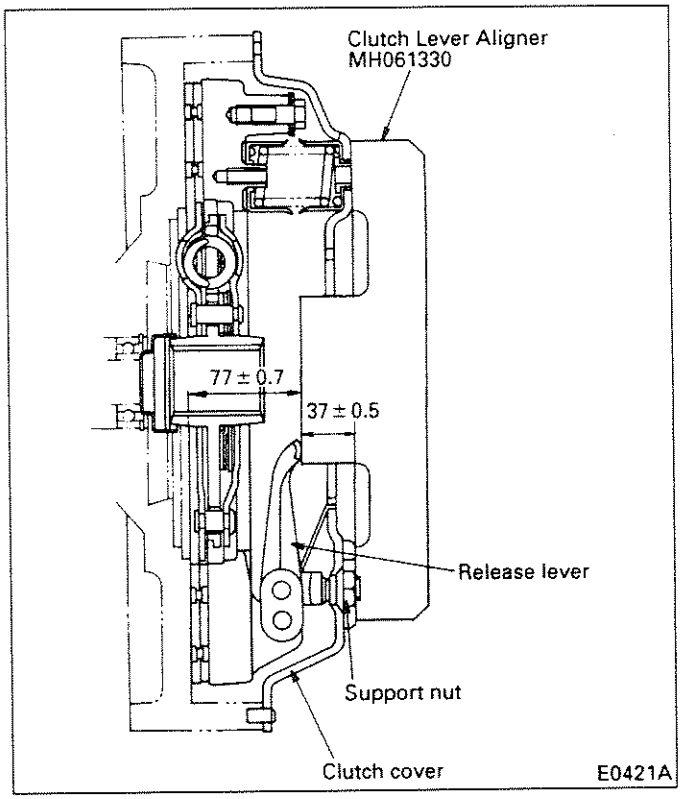

Using Clutch Lever Aligner (special tool), check the heights of the clutch cover and release lever.
Use the support nut for adjustment.

(d) Adjustment after installation of clutch and bearing case

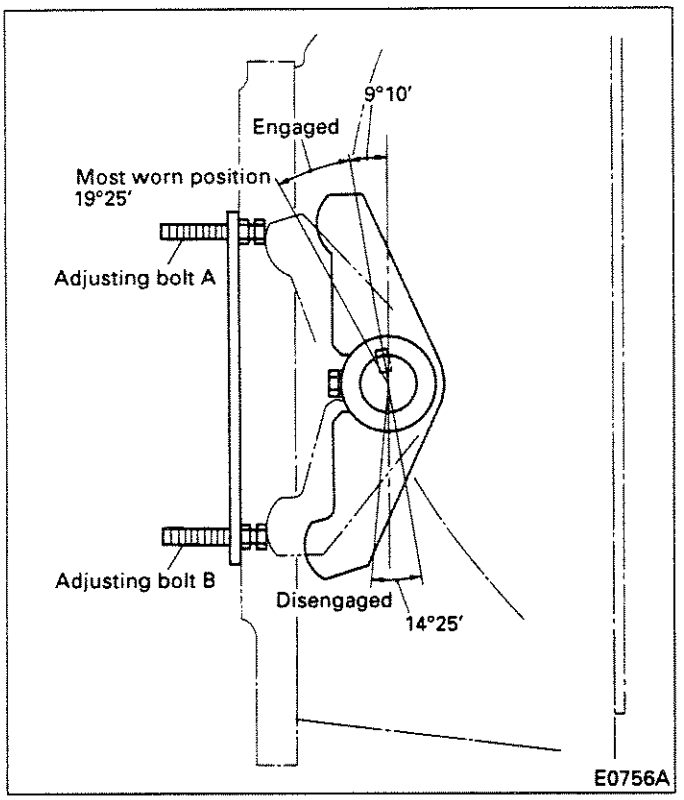

The clutch should be set in the most worn position as wear of the clutch disc during service causes the clutch to slip.

1) Move the lever in the direction that the clutch engages. At a position where a click is heard in the clutch, turn the adjusting bolt A until it is blocked by the stopper, and lock it by turning down the bolt another two or three threads.
2) From the position where the release bearing has touched the release lever, turn the adjusting bolt B in the direction that the clutch disengages, check to see that the clutch is in disengaged position, and then lock the bolt.

5.2 Clutch Proper

5.2.1 Disassembly and inspection

Depth to clutch disc rivet head
NV 2.2 to 2.8
L 0.2

Clearance of hub spline turning direction
NV 0.06 to 0.195
L 0.42

Clutch disc runout

Flatness NV 0.6 or less
Lateral runout NV 1.2 or less
Vertical runout NV 1.0 or less <C10W41> 1.2 or less <C12W43> L 1.5

<C10W41>

Free length NV 99.5
Installed load (Installed length: 63) NV 1200 to 1330 N {122.6 to 135.4 kgf} L 1070 N {109 kgf}
Squareness NV 3.5 or less L 5.2

<C12W43>

Free length NV 92.1
Installed load (Installed length: 63) NV 1420 to 1570 N {145 to 160.2 kgf} L 1270 N {129 kgf}
Squareness NV 3.2 or less L 4.8

Strap bolt fitting hole
NV 12.21 to 12.22
L 12.5

Thickness
NV 59.7 to 59.9
L 56.8

Flatness
NV 0.05 or less
L 0.2

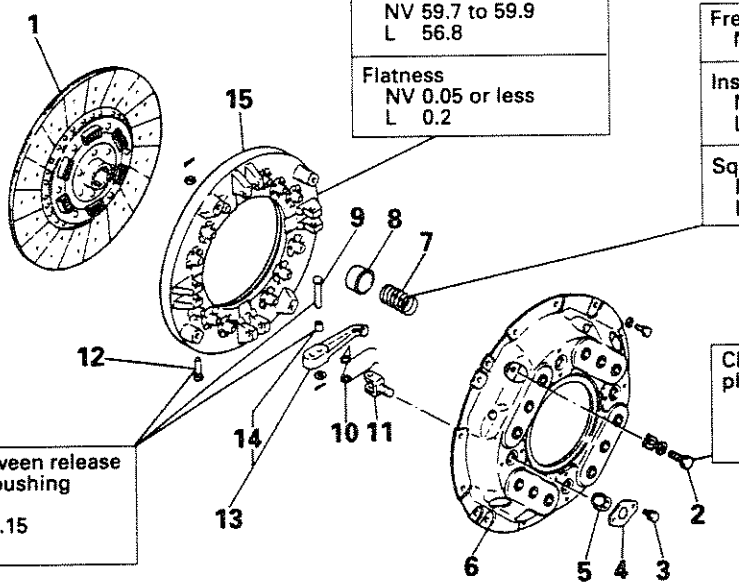

Clearance between release lever pin and bushing
BD 12.7
NV 0.06 to 0.15
L 0.3

Clearance between strap plate and strap bolt
BD 12.2
NV 0.01 to 0.11
L 0.3

BD .. Basic Diameter
NV .. Nominal Value
L..... Limit

Disassembly sequence

① Clutch disc assembly
② Strap bolt
③ Lock bolt
④ Lock plate
⑤ Support nut
⑥ Clutch cover (with strap plate)
⑦ Pressure spring
8 Spring seat
9 Release lever pin
10 Return spring
11 Release lever support
12 Release lever pin
13 Release lever subassembly
14 Bushing
⑮ Pressure plate

For parts with an encircled number, refer to Disassembly and Inspection Procedures that follow.

NOTE:
1. **Since the clutch cover and pressure plate are balanced, make alignment marks before disassembly.**
2. **Do not remove the strap plate.**

E0757B

Disassembly and Inspection Procedures

(1) Removal of clutch cover

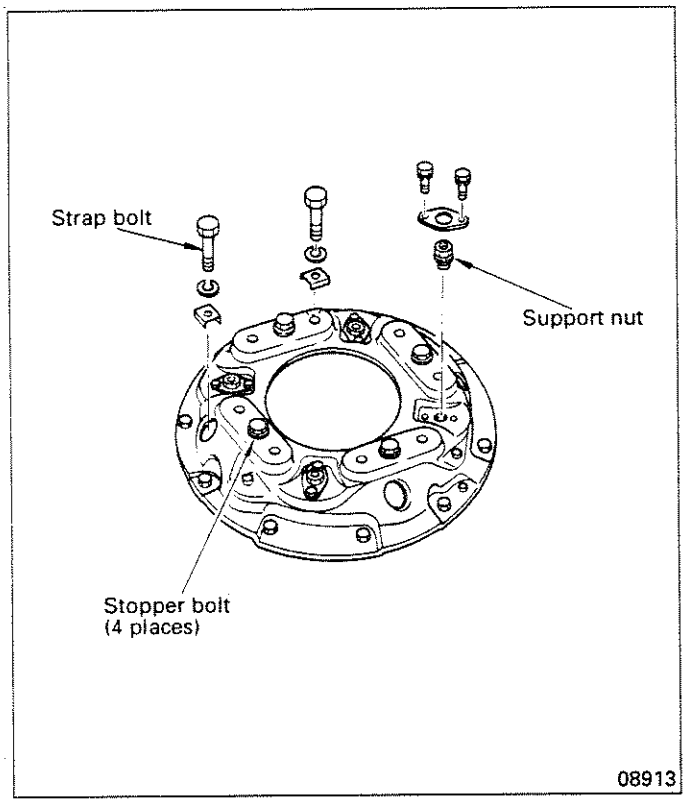

(a) Compress the pressure spring with the stopper bolts and, at the same time, remove the strap bolts, support nut, and other parts.

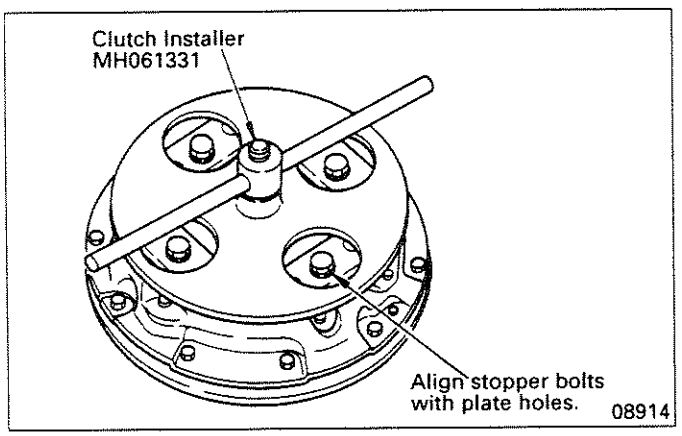

(b) Put alignment marks on the clutch cover and pressure plate. Compress the pressure spring using Clutch Installer (special tool), and the same time, remove the stopper bolt.

(c) Gradually loosen the handle of Clutch Installer to remove the clutch cover.

(2) Inspection of clutch disc

(a) Facing wear

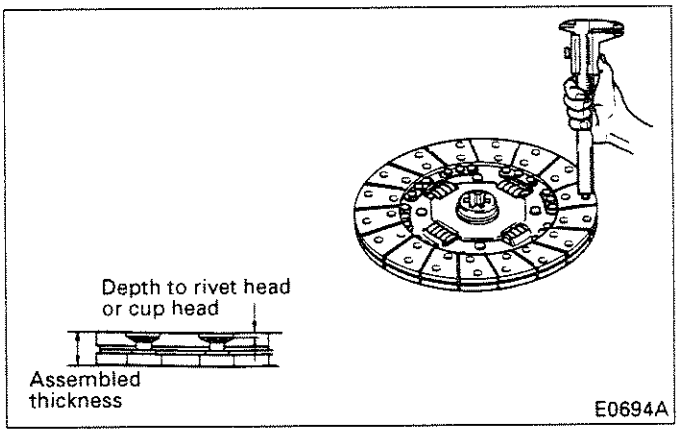

Measure the assembly thickness of facing and the depth from facing surface to rivet head or cup head. If the measurement is below the limit, replace the clutch disc assembly.

(b) Flatness of clutch disc

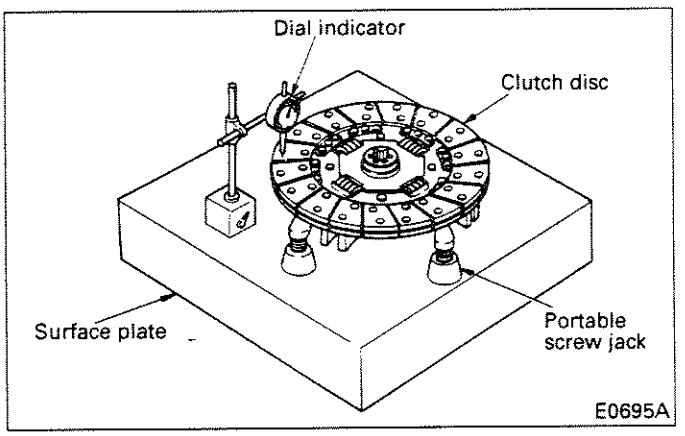

Measure the flatness of facing surface. If it is beyond the limit, correct or replace.

(c) Clutch disc runout

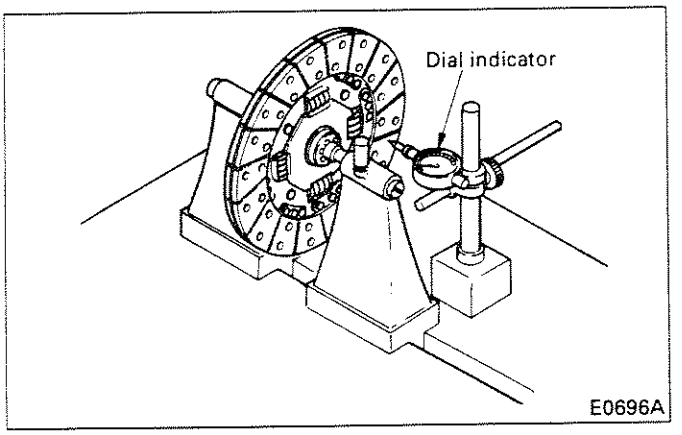

Using the runout tester, measure the clutch disc runout. If the measurement exceeds specification, correct or replace the clutch disc.

(d) Spline play in turning direction

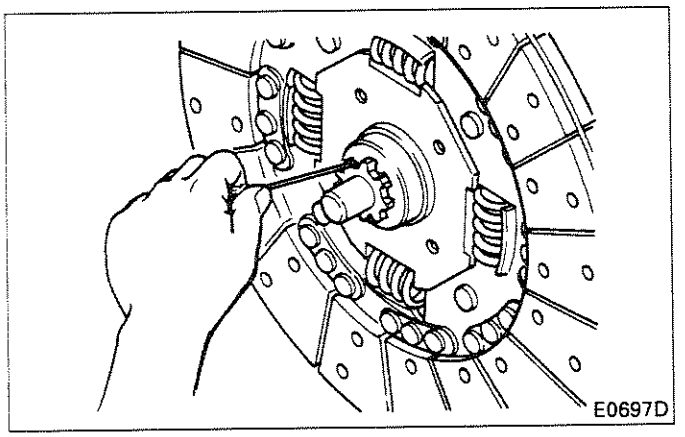

Using a piano wire, measure the play in the turning direction of the clutch disc hub splines and bearing case clutch shaft. If the limit is exceeded, replace the clutch disc.

(3) Inspection of pressure plate

(a) Measurement of thickness

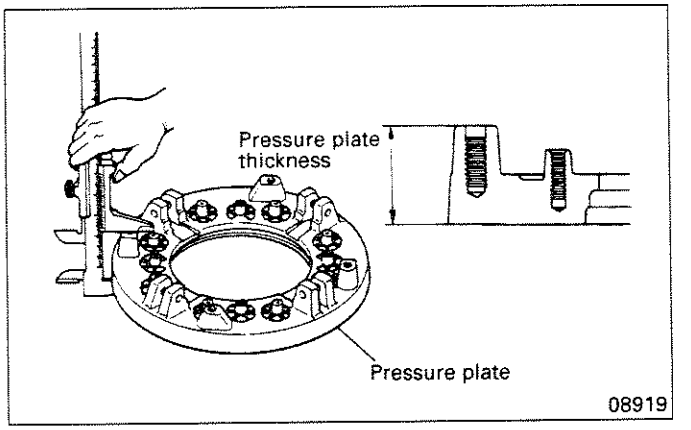

Measure the pressure plate thickness and, if it is below the limit, replace.

(b) Measurement of flatness

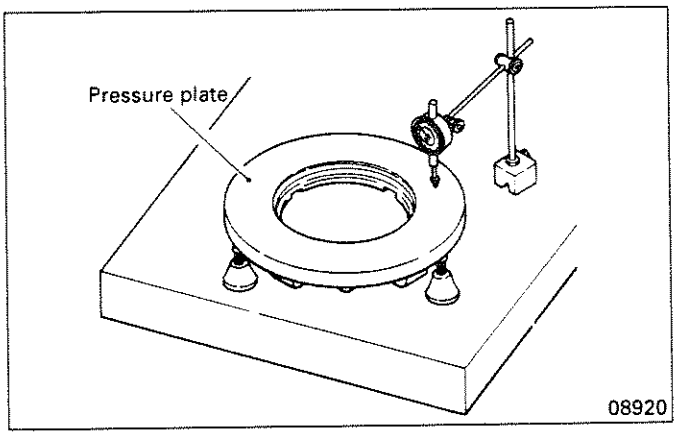

Measure the flatness of the pressure plate friction surface. Regrind or replace if the limit is exceeded.

(c) Strap bolt fitting hole I.D.

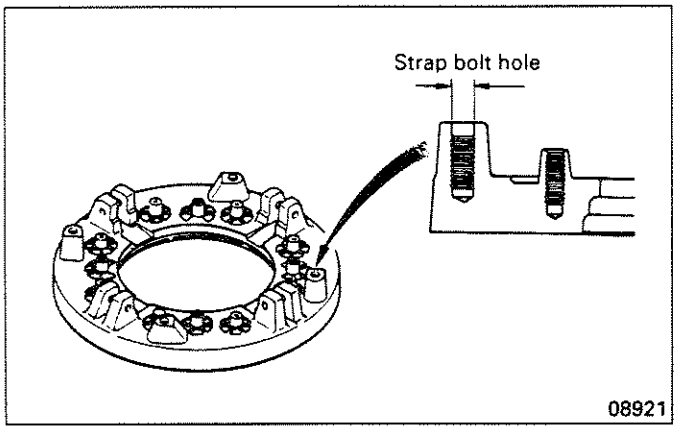

Measure I.D. of strap bolt fitting hole in the pressure plate and, if the limit is exceeded, replace.

(4) Inspection of release lever

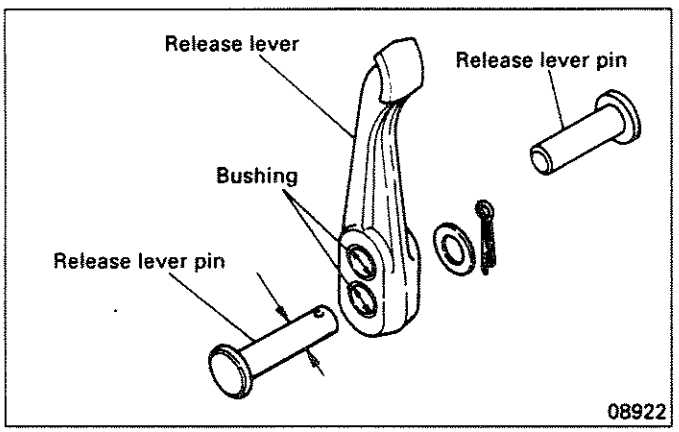

Measure the release lever pin O.D. and bushing I.D. Replace if clearance exceeds specification.

(5) Inspection of pressure spring

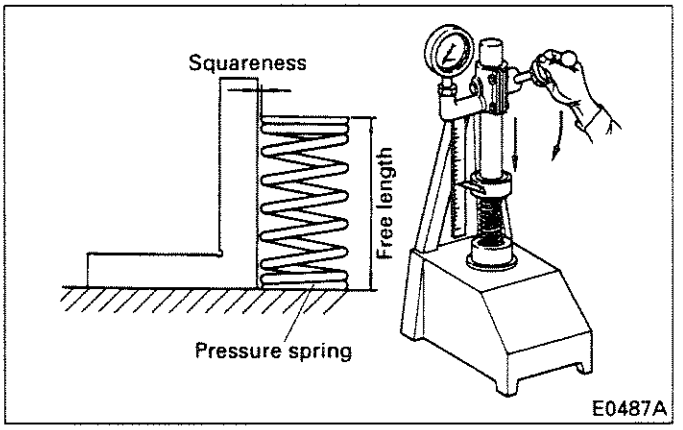

Measure the free length, squareness, and installed load of the pressure spring. If the measurement is below the limit, replace the spring.

5.2.2 Reassembly

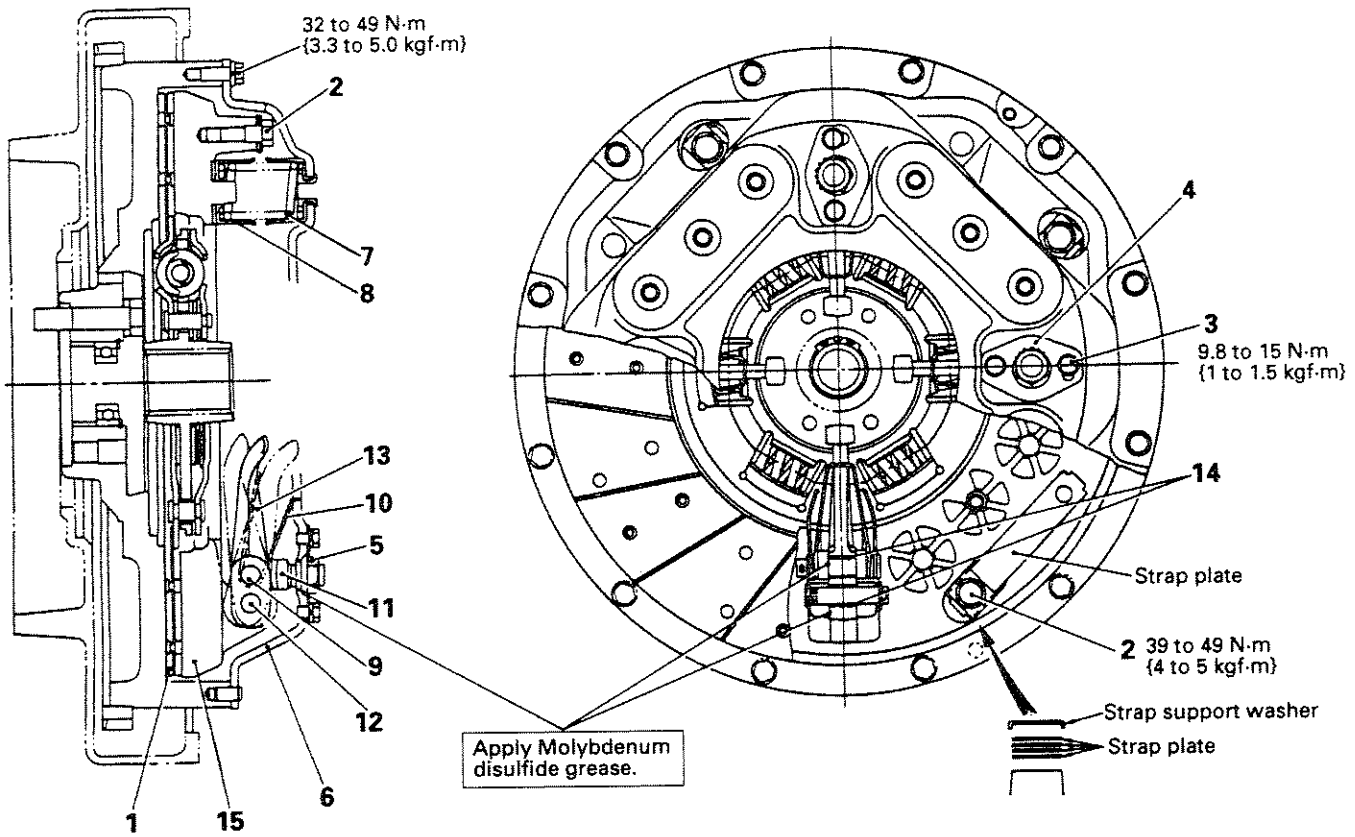

Assembly sequence

⑬ → 12 → 11→9→10→8→7→⑥→5→4→3→2→1
14 → 12 → 11→9→10→8→7→⑥→5→4→3→2→1
⑮ → 12 → 11→9→10→8→7→⑥→5→4→3→2→1

For parts with an encircled number, refer to Reassembly Procedure that follows.

E0754B

Reassembly Procedure

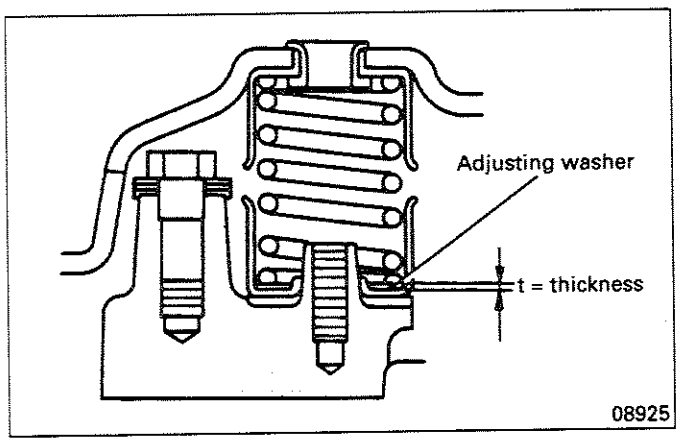

(1) Whenever the pressure plate friction surface is corrected, insert adjusting washers of thickness equivalent to correction amount.

Friction surface correction amount (mm)	Adjusting washer thickness (mm)
Less than 1	None required
1 or more to less than 2	One 1.2
2 or more to less than 3	Two 1.2 or one 2.3

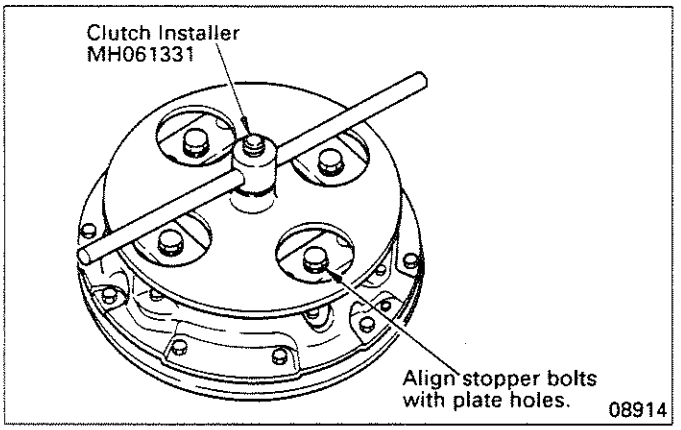

(2) To install the clutch cover, align the alignment marks and, using Clutch Installer (special tool), temporarily tighten the stopper bolts.

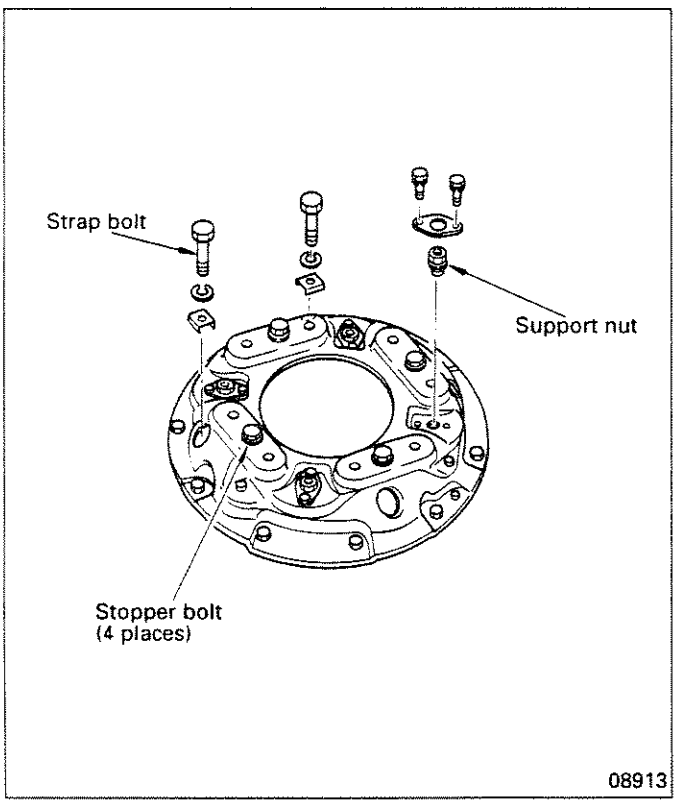

(3) With the pressure spring compressed by the stopper bolts, install the strap bolt, support nut, and other parts.

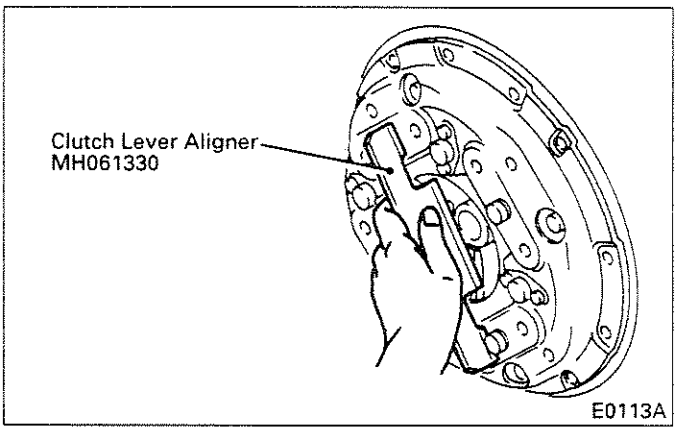

(4) After installing the clutch, check the clutch cover and release lever for height using Clutch Lever Aligner (special tool).

5.3 Bearing Case

5.3.1 Disassembly and inspection

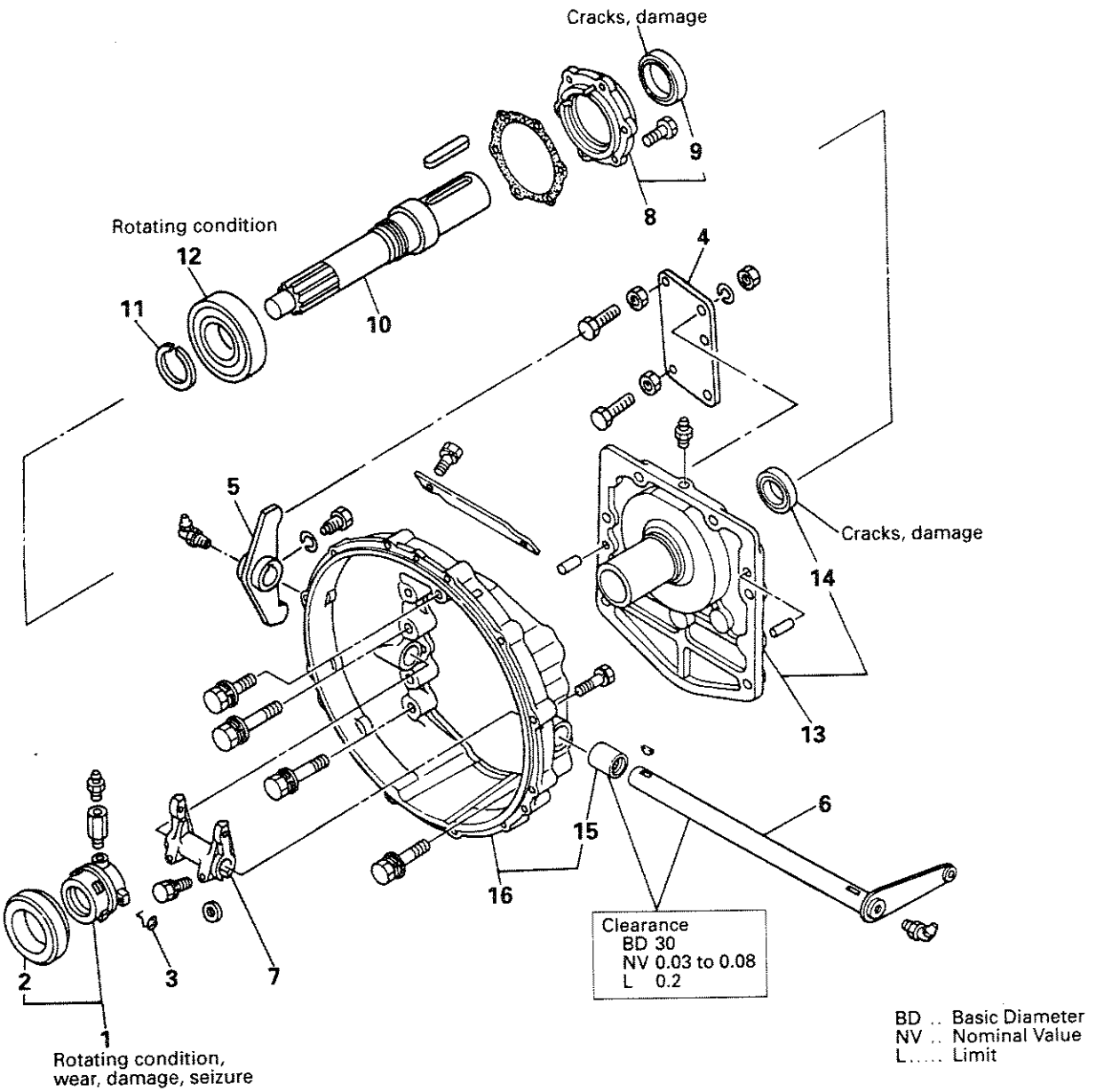

Disassembly sequence

1 Clutch shifter
*2 Clutch release bearing
3 Return spring
4 Stopper plate
5 Stopper
6 Clutch release fork shaft
7 Clutch release fork
8 Drive shaft front cover
9 Oil seal
10 Clutch shaft
11 Snap ring
12 Ball bearing
13 Bearing case
14 Oil seal
*15 Needle roller bearing
16 Clutch housing

NOTE:
Parts marked * should not be removed unless they are to be replaced.

E0760A

5.3.2 Reassembly

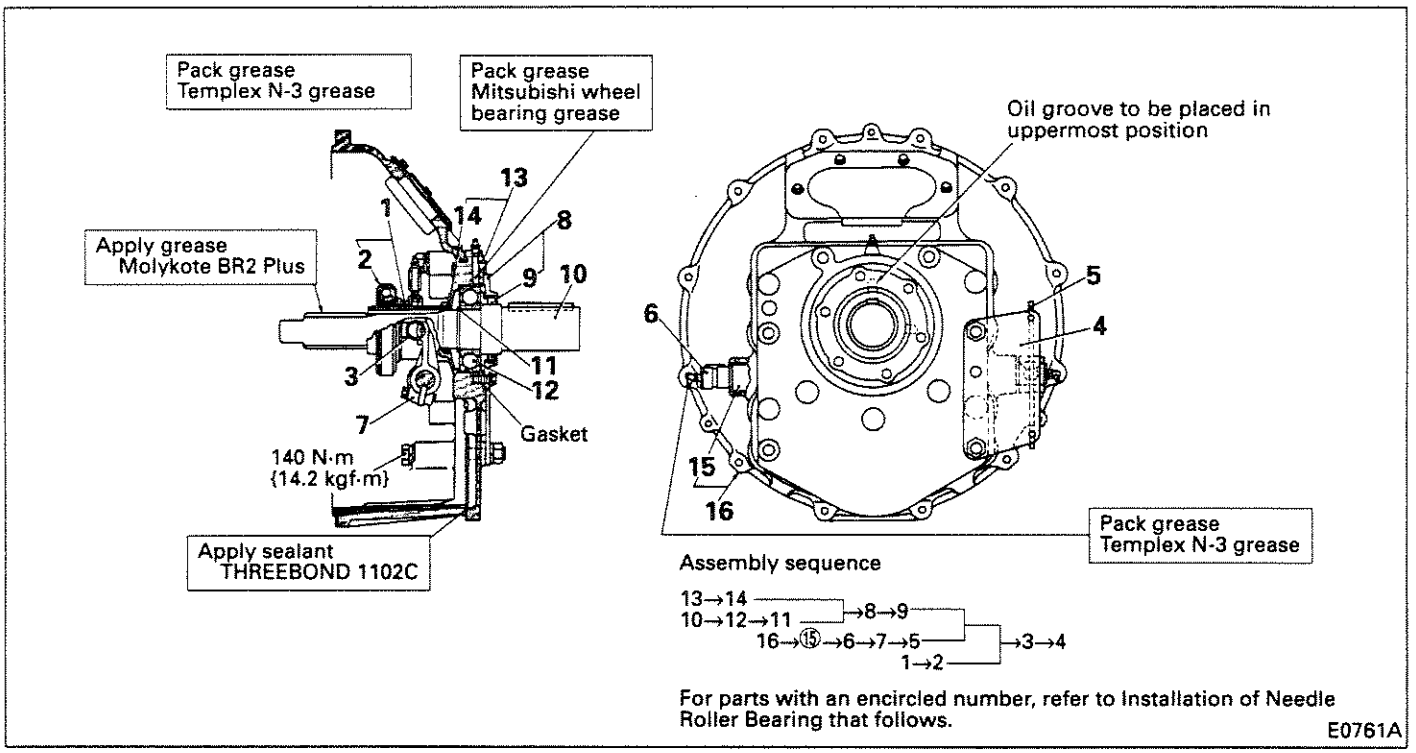

Reassembly Procedure

Installation of Needle Roller Bearing

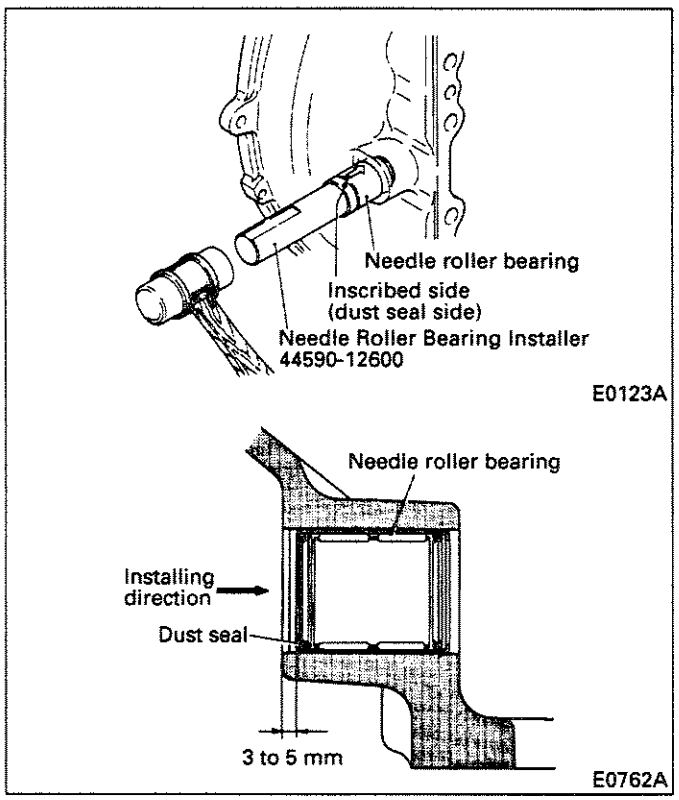

Using Needle Roller Bearing Installer (special tool), install the needle roller bearing in the housing.
The needle roller bearing should be pressed in up to the specified dimension with the oil seal side inward and the inscribed side outward.

NOTE:
When installing the needle roller bearing, direct the lip in the correct direction.

6. TROUBLESHOOTING

Symptom	Probable cause	Remedy	Ref. group
Clutch drags when disengaged	Defective clutch proper (Disassemble and check clutch assembly.)		
	• Damaged or poorly lubricated pilot bearing	Replace or lubricate	
	• Damaged release bearing	Replace	
	• Uneven height of release lever or its damage	Adjust height or replace	
	• Defective clutch disc	Replace	
	• Damaged or deformed clutch disc		
	• Worn or rusty splines and clutch disc hub	Replace or correct defective parts	
	• Distored or damaged pressure plate	Grind or replace	
	Distored or damaged flywheel		Group 11
Clutch slips	Defective clutch proper (Disassemble and check clutch assembly.)		
	• Uneven height of release lever	Adjust	
	• Pressure spring losing proper tension	Replace	
	• Defective clutch disc		
	• Worn facing		
	• Deformed clutch disc		
	• Hardened facing	Remove hardened surface or replace	
	• Oil on facing	Remove oil or replace	
	• Distored or damaged pressure plate	Grind or replace	
	Distored or damaged flywheel		Group 11
Clutch is not smoothly engaged	Defective clutch proper (Disassemble and check clutch assembly.)		
	• Defective clutch disc	Replace	
	• Distored facing		
	• Hardened facing	Remove hardened surface or replace	
	• Loose rivet	Replace	
	• Oil on facing	Remove oil or replace	
	• Binding clutch disc splines	Correct or lubricate splines	
	• Clutch disc torsion spring losing proper tension or broken	Replace	
	• Uneven height of release lever	Adjust	
	• Pressure spring losing proper tension	Replace	
	• Distored or damaged pressure plate	Grind or replace	
	Distored or damaged flywheel		Group 11

CLUTCH – TROUBLESHOOTING

Symptom	Probable cause	Remedy	Ref. group
Clutch is noisy when disengaged	Worn, damaged, or poorly lubricated pilot bearing	Replace or lubricate	
	Worn, damaged, or poorly lubricated release bearing		
	Defective clutch disc • Worn clutch disc splines	Replace	
	• Clutch disc torsion spring losing proper tension or broken		
	Bent strap plate	Replace clutch cover	
Clutch is noisy when engaging	Defective clutch disc • Clutch disc torsion spring losing proper tension or broken	Replace	
	• Worn clutch disc hub splines		
	Worn splines of clutch shaft		
	Pressure spring losing proper tension		
	Low idle speed	Adjust	Group 13

SPECIAL EQUIPMENT

CONTENTS

1. GENERAL 2
1.1 Air Compressor 2
1.2 Air Pressure Governor 4
2. SPECIFICATIONS 5
3. SERVICE STANDARDS 6
3.1 Service Standards Table 6
3.2 Tightening Torque Table 8
4. SPECIAL TOOL 9
5. SERVICE PROCEDURE 10
5.1 Air Compressor 10
5.1.1 Removal and installation 10
5.1.2 Disassembly 15
5.1.3 Inspection 20
5.1.4 Reassembly 27
5.2 Air Pressure Governor 32
5.2.1 Disassembly and inspection 32
5.2.2 Reassembly and adjustment 33

1. GENERAL

1.1 Air Compressor

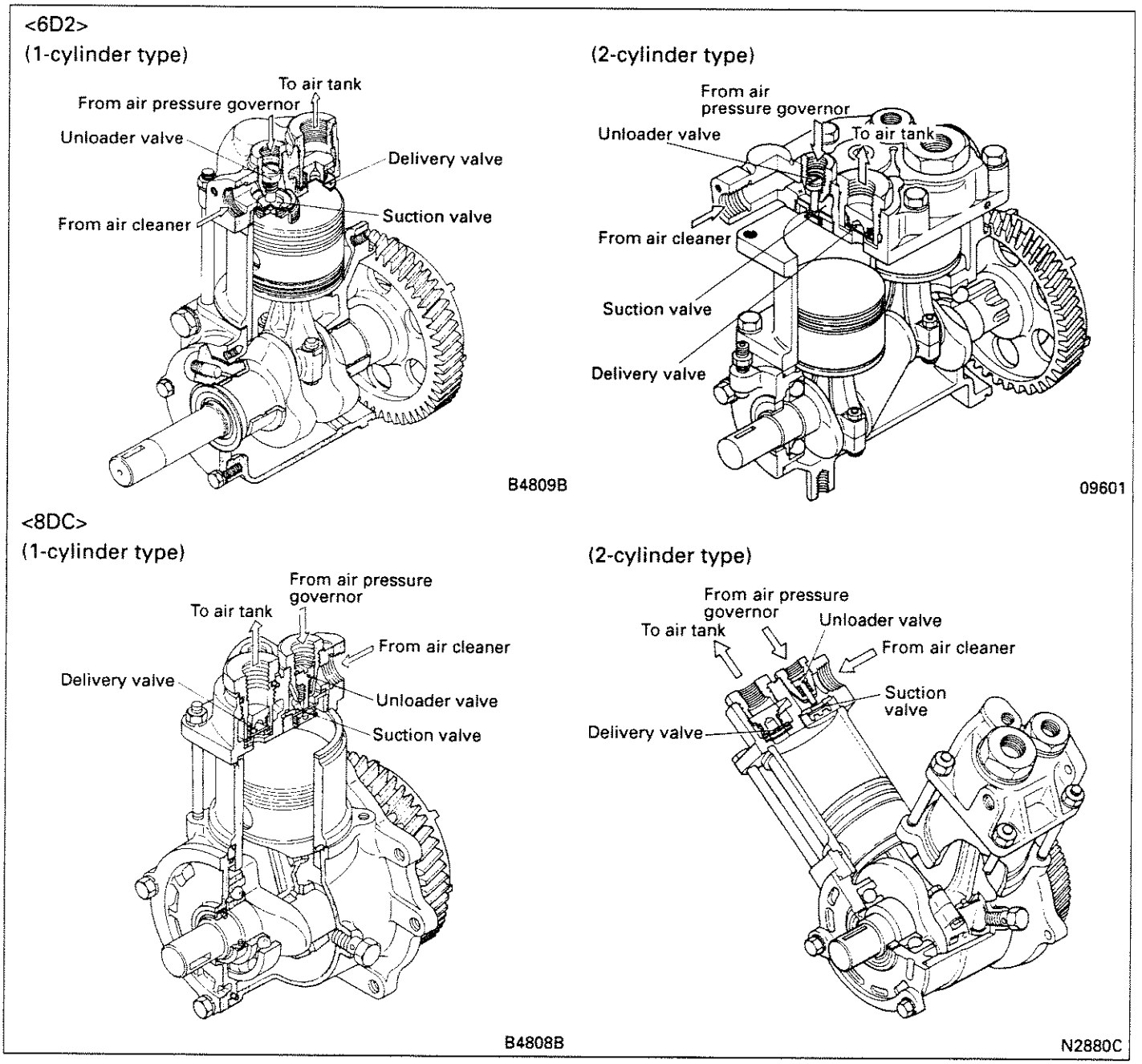

The air compressor is driven by the injection pump gear in mesh with the timing gear of the engine at a speed one half of the engine speed. On the cylinder head of the air compressor, a suction valve, delivery valve and unloader valve are provided which respectively accomplishes the suction, delivery and exhaust functions. The air compressor comes in two types; the 1- and 2-cylinder types.

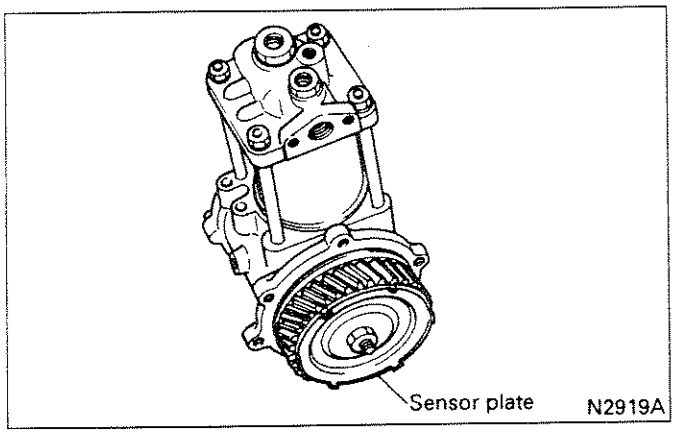

A sensor plate for the tachometer is provided on the injection pump gear side of the air compressor. The sensor plate has sensor bars.

(1) How air is drawn in

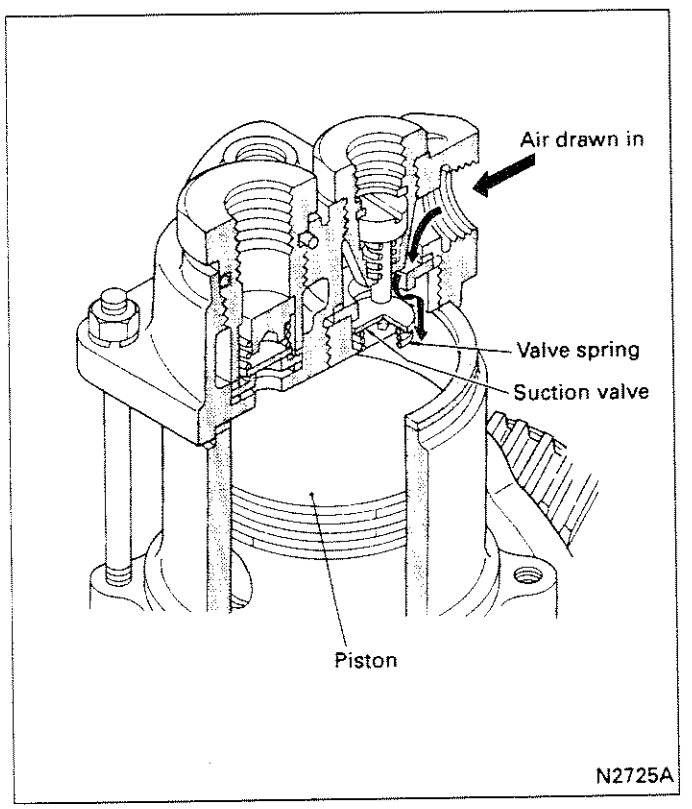

The air is drawn in by the negative pressure which is produced in the cylinder as the piston moves down. When the negative pressure is produced in the cylinder, the suction valve that has been stopping up the suction port of the valve seat compresses the valve spring to open the suction port. So the air is drawn into the cylinder.

When the piston enters the up stroke, the suction valve is forced back by the valve spring to close the air suction port of the valve seat.

(2) How air is routed under pressure

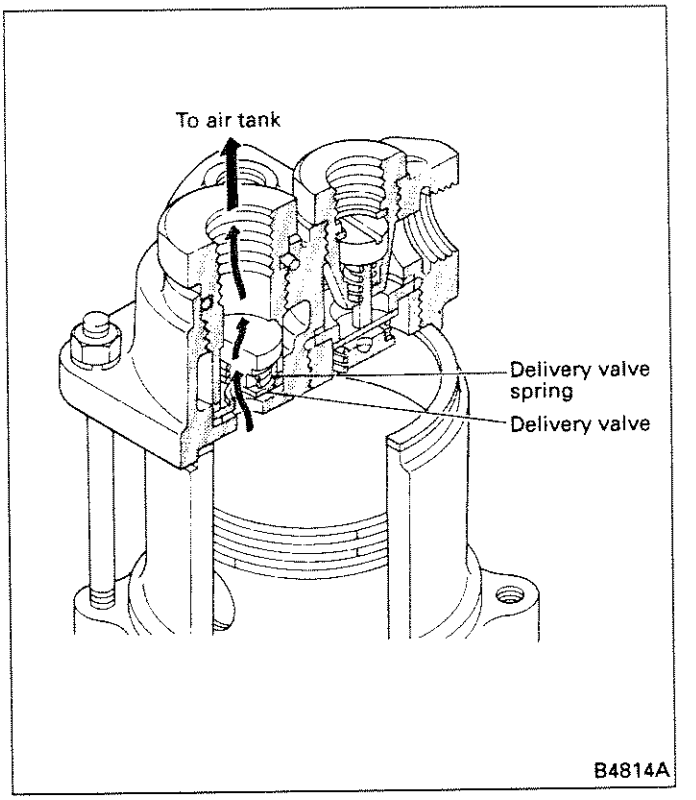

The air, compressed in the cylinder as the piston moves down, gets over the action of the valve spring on the delivery side and forces up the delivery valve stopping up the delivery port of the valve seat. So the air is routed under pressure to the air tank.
When the piston enters the down stroke, the delivery valve is forced back by the valve spring to close the air delivery port of the valve seat.

(3) How unloader valve operates

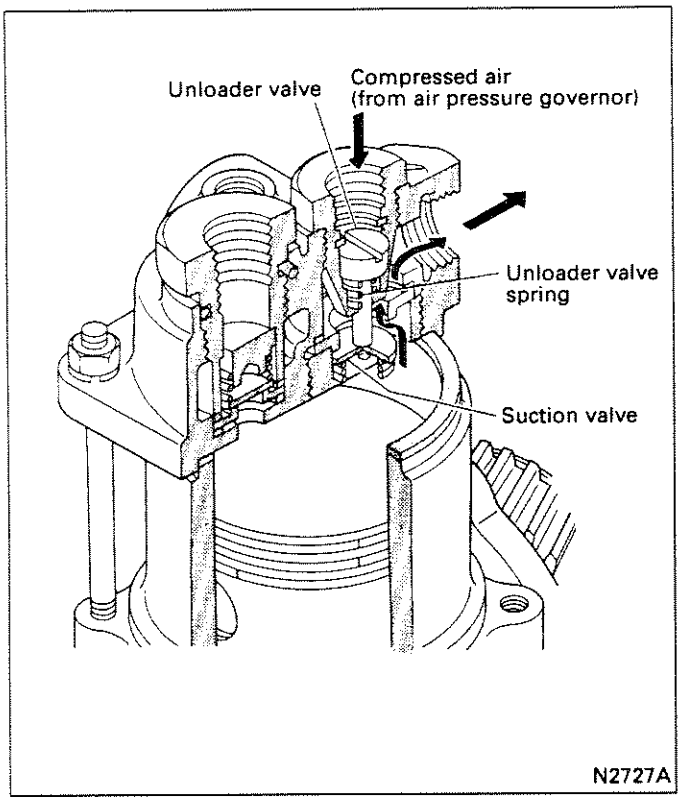

When the air pressure in the air tank exceeds the specified pressure (pressure governor operating pressure), the pressure governor opens to send the compressed air to the unloader valve. The compressed air not only depresses the unloader valve, but keeps the suction valve open, causing the air compressor to operate under no load.

When the air pressure in the air tank falls below specification, the pressure governor resumes operation, discharging compressed air present at top of the unloader. Then the unloader valve spring puts the unloader valve back to its original position, causing the suction valve to begin operation.

1.2 Air Pressure Governor

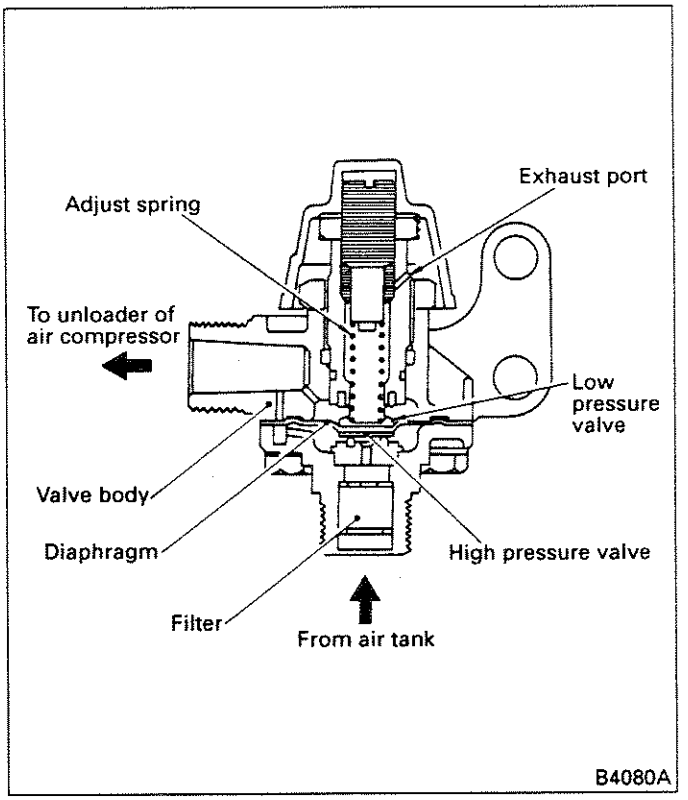

The pressure governor controls compressor operation to keep the air tank pressure within specified limits.

To the high pressure valve of the diaphragm, the same air pressure as in the air tank acts always through the filter, thereby balancing with the adjusting spring force. When the pressure in the air tank increases to exceed that opening pressure of the high pressure valve, the air forces up the high pressure valve seat of the diaphragm. This causes increase of acting area so that the diaphragm moves up quickly to close the seat of the low pressure valve.

When the low pressure valve is closed, air now flows through the valve body to force down the unloader valve of the air compressor, thereby stopping air supply to the air tank.

As the air pressure in the air tank gradually drops, the diaphragm is forced down by the adjusting spring and the low pressure valve opens and the high pressure one closes. As a result, the air on the unloader side is exhausted through the exhaust hole and air supply to the air tank is resumed.

2. SPECIFICATIONS

Unit: mm

Item		Specification	
Air compressor	Type	Water-cooled 1-cylinder type	Water-cooled 2-cylinder type
	Cylinder diameter x stroke	85 x 50	80 x 50
	Cylinder capacity	284 cm^3	502 cm^3
	Turning direction (as viewed from drive side)	Clockwise	
Pressure governor	Type	Diaphragm type	

3. SERVICE STANDARDS

3.1 Service Standards Table

(1) Air compressor

Unit: mm

Maintenance item			Nominal value (Basic diameter in [ ])	Limit	Remedy and remarks
6D2 Engine					
1-cylinder type	Suction valve spring deterioration	Installed load/ installed length	4.4 N {0.45 kgf}/5	3.5 N {0.36 kgf}/5	Replace
	Delivery valve spring deterioration		4.5 N {0.46 kgf}/9.5	3.6 N {0.37 kgf}/9.5	
	Piston ring open end clearance (measured inside cylinder liner)		–	1.0	Replace all piston rings as a set
	Clearance between piston ring and ring groove of piston	Compression ring only	–	0.08	Replace all piston rings as a set
	Piston pin to piston clearance		[18]	0.08	Replace
	Piston pin to connecting rod small end clearance		[18]	0.07	Replace piston pin or connecting rod
	Piston to cylinder liner clearance	Top portion	[85]	0.27	Replace piston or cylinder liner
		Skirt portion	[85]	0.18	
	Bearing to crankshaft clearance		[42]	0.1	Replace crankshaft or crankcase
	Crankshaft to connecting rod bearing clearance		[34]	0.1	Replace bearing
	Connecting rod bearing		–	When copper color is exposed because of worn internal plated layer	Replace bearing
	Crankshaft end play		–	1.0	Replace crankshaft
	Connecting rod end play		–	0.5	Replace crankshaft or connecting rod
2-cylinder type	Suction valve spring deterioration	Installed load/ installed length	4.4 N {0.45 kgf}/5	3.5 N {0.36 kgf}/5	Replace
	Delivery valve spring deterioration		4.5 N {0.46 kgf}/9.5	3.6 N {0.37 kgf}/9.5	
	Piston ring open end clearance (measured inside cylinder liner)		–	1.0	Replace all piston rings as a set
	Clearance between piston ring and ring groove of piston	Compression ring only	–	0.08	Replace all piston rings as a set
	Piston pin to piston clearance		[16]	0.08	Replace
	Piston pin to connecting rod small end clearance		[16]	0.07	Replace piston pin or connecting rod
	Piston to cylinder liner clearance	Top portion	[80]	0.29	Replace piston or cylinder liner
		Skirt portion	[80]	0.17	
	Crankshaft to connecting rod bearing clearance		[34]	0.1	Replace bearing
	Connecting rod bearing		–	When copper color is exposed because of worn internal plated layer	Replace bearing
	Crankshaft end play		–	1.0	Replace crankshaft
	Connecting rod end play		–	0.5	Replace crankshaft or connecting rod

Unit: mm

Maintenance item			Nominal value (Basic diameter in [ ])	Limit	Remedy and remarks
8DC Engine					
1-cylinder type	Suction valve spring deterioration	Installed load/ installed length	4.4 N {0.45 kgf}/5	3.5 N {0.36 kgf}/5	Replace
	Delivery valve spring deterioration		4.5 N {0.46 kgf}/9.5	3.6 N {0.37 kgf}/9.5	
	Piston ring open end clearance (measured inside cylinder liner)		–	1.0	Replace all piston rings as a set
	Clearance between piston ring and ring groove of piston	Compression ring only	–	0.08	Replace all piston rings as a set
	Piston pin to piston clearance		[18]	0.08	Replace
	Piston pin to connecting rod small end clearance		[18]	0.07	Replace piston pin or connecting rod
	Piston to cylinder liner clearance	Top portion	[85]	0.27	Replace piston or cylinder liner
		Skirt portion	[85]	0.18	
	Crankshaft to connecting rod bearing clearance		[34]	0.1	Replace bearing
	Connecting rod bearing		–	When copper color is exposed because of worn internal plated layer	Replace bearing
	Crankshaft end play		–	1.0	Replace crankshaft
	Connecting rod end play		–	0.5	Replace crankshaft or connecting rod
2-cylinder type	Suction valve spring deterioration	Installed load/ installed length	4.4 N {0.45 kgf}/5	3.5 N {0.36 kgf}/5	Replace
	Delivery valve spring deterioration		4.5 N {0.46kgf}/9.5	3.6 N {0.37 kgf}/9.5	
	Piston ring open end clearance (measured inside cylinder liner)		–	1.0	Replace all piston rings as a set
	Clearance between piston ring and ring groove of piston	Compression ring only	–	0.08	Replace all piston rings as a set
	Piston pin to piston clearance		[16]	0.08	Replace
	Piston pin to connecting rod small end clearance		[16]	0.07	Replace piston pin or connecting rod
	Piston to cylinder liner clearance	Top portion	[80]	0.29	Replace piston or cylinder liner
		Skirt portion	[80]	0.17	
	Crankshaft to connecting rod bearing clearance		[34]	0.1	Replace bearing
	Connecting rod bearing		–	When copper color is exposed because of worn internal plated layer	Replace bearing
	Crankshaft end play		–	1.0	Replace crankshaft
	Connecting rod end play (with two paired)		–	1.0	Replace crankshaft or connecting rod

(2) Air pressure governor

Unit: kPa {kg/cm^2}

Maintenance item		Nominal value	Limit	Remedy and remarks
High pressure valve opening pressure	MC802148	$715^{+34}_{-4.9}$ $\{7.3^{+0.35}_{-0.05}\}$	–	Adjust or replace
	MC802150	$784^{+34}_{-4.9}$ $\{8.0^{+0.35}_{-0.05}\}$	–	
Low pressure valve opening pressure	MC802148	$625^{+4.9}_{-34}$ $\{6.4^{+0.05}_{-0.35}\}$	–	
	MC802150	$695^{+4.9}_{-34}$ $\{7.1^{+0.05}_{-0.35}\}$	–	

3.2 Tightening Torque Table

(1) Air compressor

Location tightened		Screw size O.D. x pitch (mm)	Tightening torque N·m {kgf·m}
Cylinder head nut	6D2 <1-cylinder type>, 8DC	M10 x 1.25	23 to 27 {2.3 to 2.8}
Cylinder head bolt	6D2 <2-cylinder type>	M10 x 1.5	39 to 49 {4 to 5}
Cylinder liner nut	6D2 <2-cylinder type>	M10 x 1.5	25 to 29 {2.5 to 3.0}
Injection pump gear mounting nut		M24 x 1.5	215 {22}
Bearing holder bolt	6D2, 8DC <1-cylinder type>	M8 x 1.25	14 to 18 {1.4 to 1.8}
	8DC <2-cylinder type>		19 to 25 {1.9 to 2.6}
Bearing holder nut	6D2 <2-cylinder type>	M8 x 1.25	14 to 18 {1.4 to 1.8}
Connecting rod cap nut		M8 x 1.25	23 to 25 {2.3 to 2.6}
Joint	6D2	PT1/8	15 to 20 {1.5 to 2.0}
Unloader valve guide		M28 x 1.5	98 to 115 {10 to 12}
Delivery valve holder		M36 x 1.5	98 to 115 {10 to 12}
Suction valve holder		M45 x 1.5	98 to 115 {10 to 12}

(2) Air pressure governor

Location tightened	Screw size O.D. x pitch (mm)	Tightening torque N·m {kgf·m}
Sleeve lock nut	–	15 to 20 {1.5 to 2}
Adjusting screw lock nut	–	9.8 to 15 {1 to 1.5}

4. SPECIAL TOOL

Air compressor

Unit: mm

Tool name	Shape
Air Compressor Suction Valve Tool MH061263 Installation and removal of suction valve holder	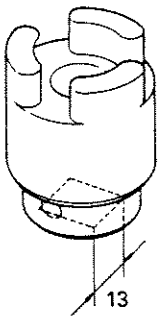 01730

Unit: mm

Tool name	Shape
Piston Ring Tool MH060014 Removal and installation of piston ring	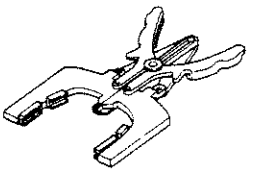 01732

5. SERVICE PROCEDURE

5.1 Air Compressor

5.1.1 Removal and installation

NOTE:

1. **To remove the air compressor, remove the injection pump beforehand.**
2. **At installation, the injection pump gear installed on the air compressor should be in mesh as specified.**

<6D2>

(1-cylinder type air compressor)

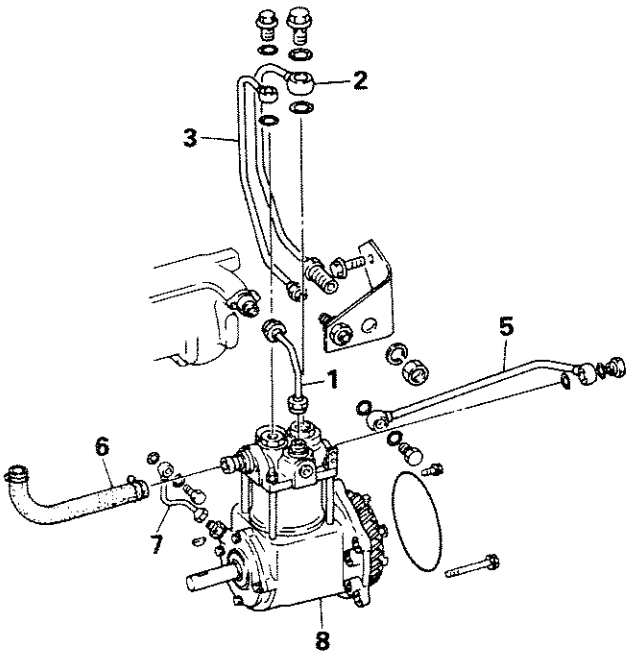

B9050B

(2-cylinder type air compressor)

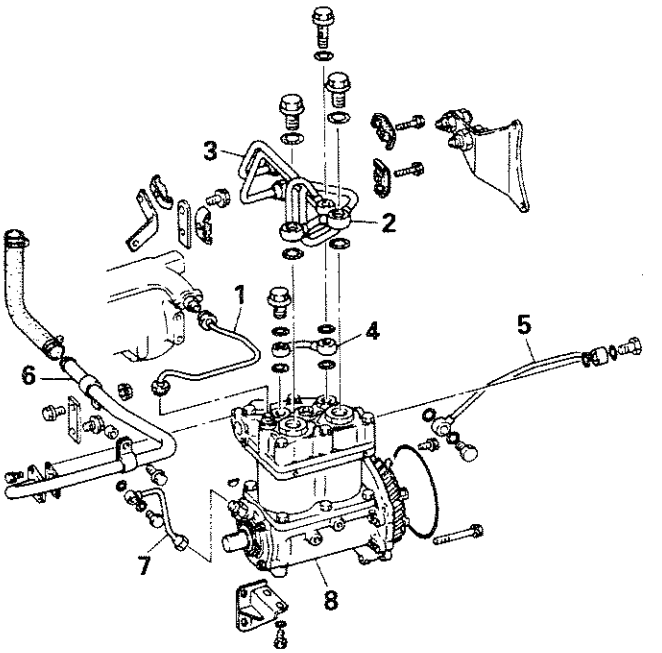

B9051B

1 Water outlet pipe
2 Air outlet pipe
3 Unloader pipe A
4 Unloader pipe B (2-cylinder type only)
5 Water inlet pipe
6 Air suction hose (1-cylinder type)
Air suction pipe (2-cylinder type)
7 Oil pipe
8 Air compressor

<8DC>
(1-cylinder type air compressor)

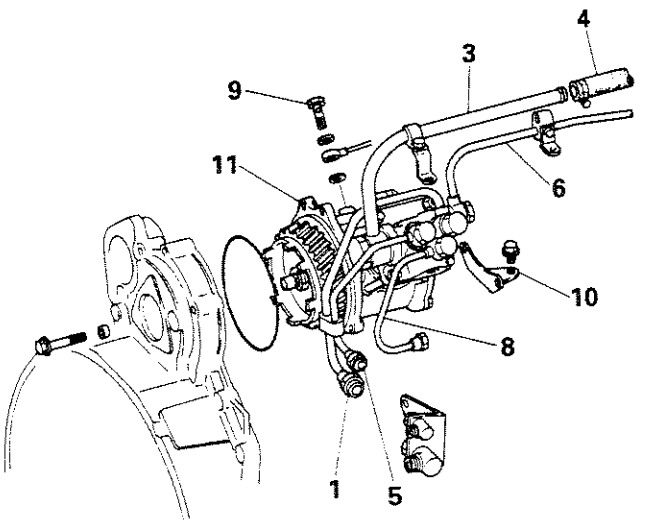

(2-cylinder type air compressor)

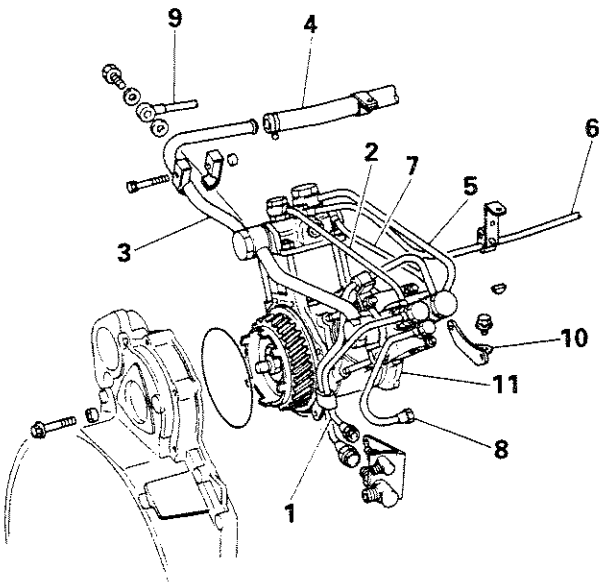

1 Unloader pipe A
2 Unloader pipe B (2-cylinder type only)
3 Air suction pipe
4 Air suction hose
5 Air outlet pipe
6 Water outlet pipe
7 Water inlet pipe A (2-cylinder type only)
8 Water inlet pipe B
9 Oil inlet pipe
10 Air compressor bracket
11 Air compressor

B4490A B9057A

Removal Procedure

With the piston at any other position, the injection pump gear guide plate cannot be removed as it is caught by the idler gear.

Installation Procedure

(1) 6D2

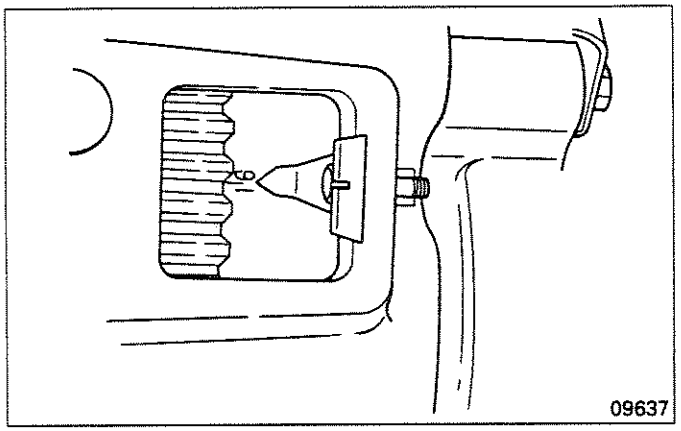

(a) Crank the engine until the "16" marked on the outer periphery of the flywheel is aligned with the pointer of the inspection window of the flywheel housing to place the piston in the No. 1 cylinder of the engine at the top dead center on the compression stroke. If the piston in the No. 1 cylinder is at the top dead center on the compression stroke, the valve clearance should exist in the No. 1 cylinder. If there is no valve clearance, the piston in the No. 6 cylinder is at the top dead center on the compression stroke. Therefore, rotate the engine 360°.

NOTE:
When the engine is to be cranked, crank it by hand 180° or more in the direction of normal rotation.

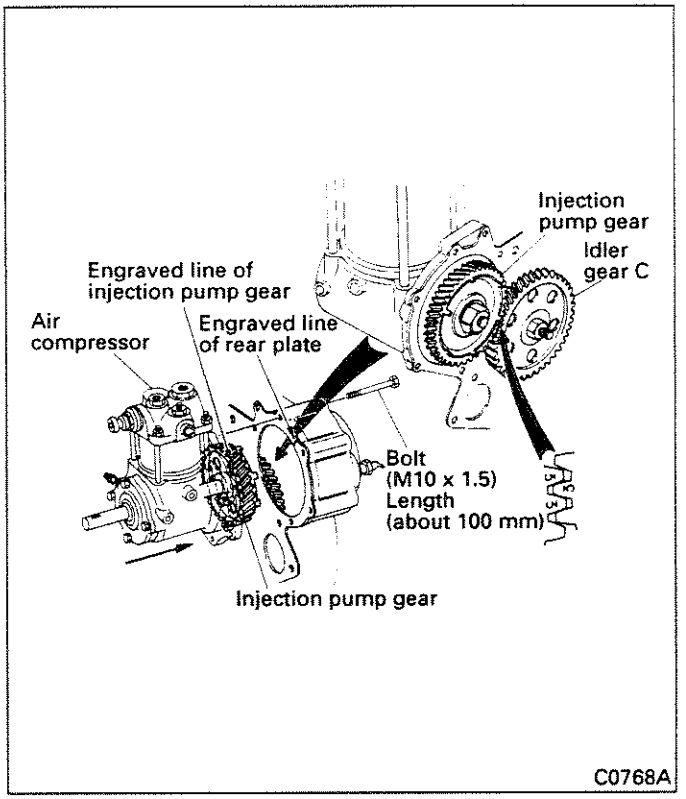

(b) Insert bolts (M10 x 1.5 about 100 mm long) from the rear end plane of the flywheel housing to support the air compressor. Insert the air compressor in the hole provide in flywheel housing until its gear end makes contact with the end surfaces of both injection pump gear and camshaft gear. Align the inscribed lines on rear plate and injection pump gear and push the air compressor inward.

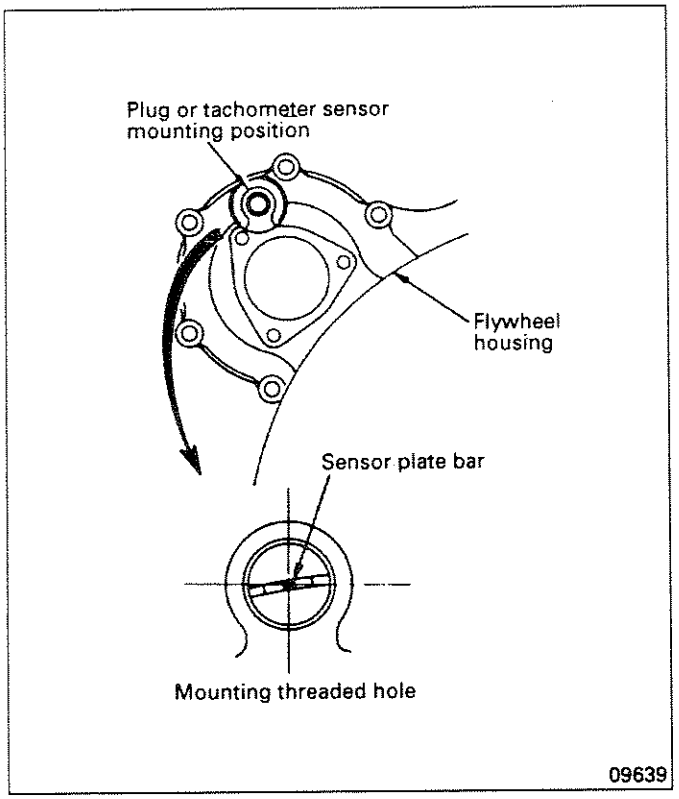

(c) Remove the tachometer sensor or plug. Look through the threaded hole to confirm that the projection on the sensor plate is positioned at the center of the threaded hole, and then secure the air compressor. If the projection on the sensor plate is not positioned at the center of the threaded hole, remove the air compressor and perform Item (b) again.

NOTE:
If the meshing teeth of the injection pump gear and idler gear C are one tooth different, about one half of the sensor plate bar will be hidden from the threaded hole.

(d) Installation of tachometer sensor

1) Adjustment-free type

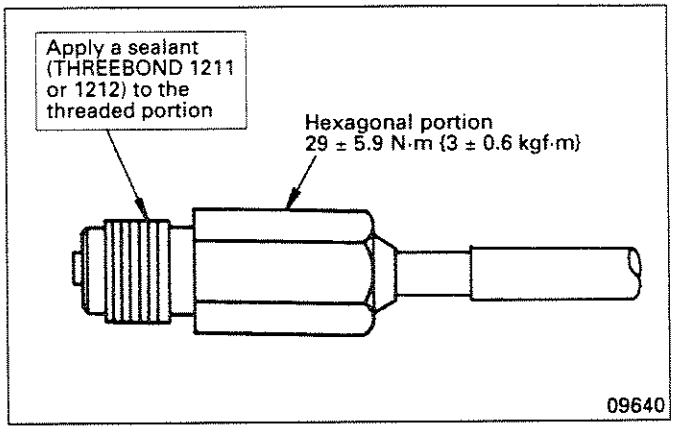

To install the tachometer sensor, apply sealant to the threaded portion of the sensor and screw the sensor in until the hexagonal portion of the sensor seats.

2) Adjustment type

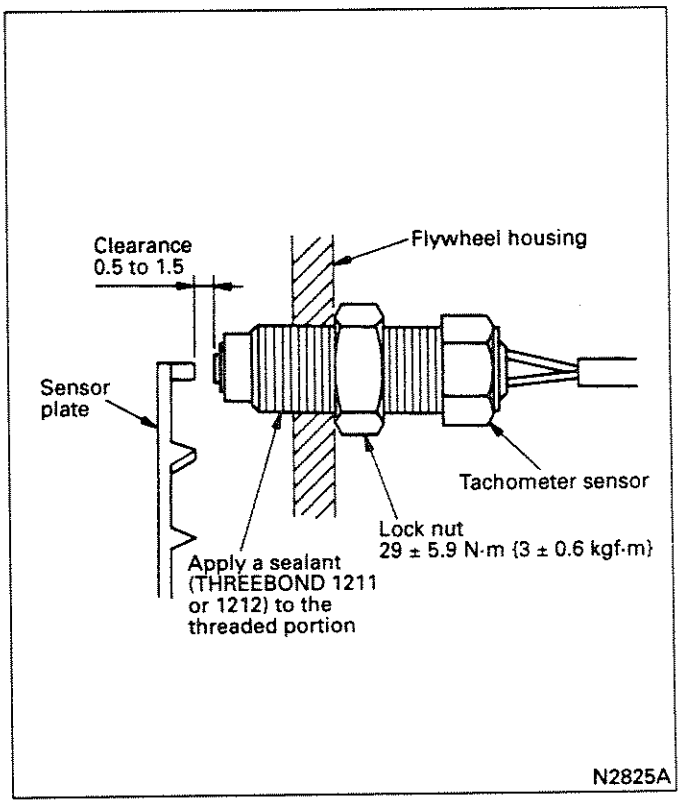

To mount the tachometer sensor, apply a sealant to the threaded portion of the sensor and turn down the sensor until it comes in contact with the sensor plate. Then back it off 2/3 of a turn (240°) (Clearance 1.0 mm). Secure it by tightening the lock nut to specification.

(2) 8DC

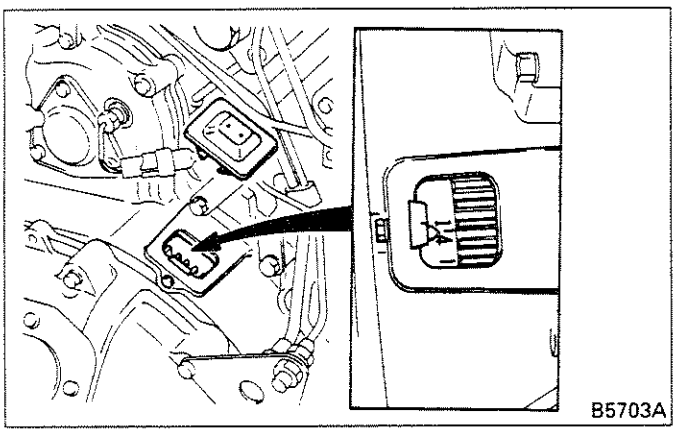

(a) Crank the engine until the piston of the No. 1 cylinder is placed at the top dead center on the compression stroke. When the engraved line 1,4 of the flywheel housing is in alignment with the pointer of the inspection window of the flywheel housing, the piston of the No. 1 or No. 4 cylinder is at the top dead center on the compression stroke. In this case, the piston of the cylinder where the push rod is not pushing the rocker up is at the top dead center on the compression stroke.

NOTE:
When you crank the engine, be sure to manually crank the engine more than 180° in the forward direction.

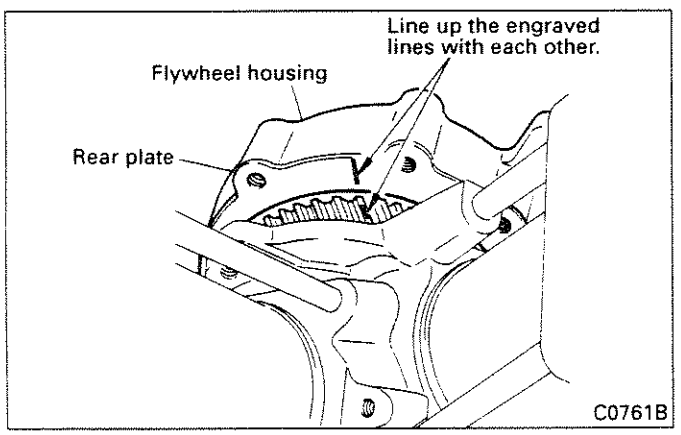

(b) Insert the air compressor into the mounting hole of the flywheel housing. With both end planes of the injection pump gear and camshaft gear in contact, line up the engraved line of the rear plate with the engraved line on the tooth surface of the injection pump gear (make sure that the engraved line on the gear tooth surface is in alignment with the line extending from the engraved line of the rear plate). Then push the air compressor into position.

NOTE:
On the sensor plate equipped version, perform the following procedures to check that the gears are in mesh.

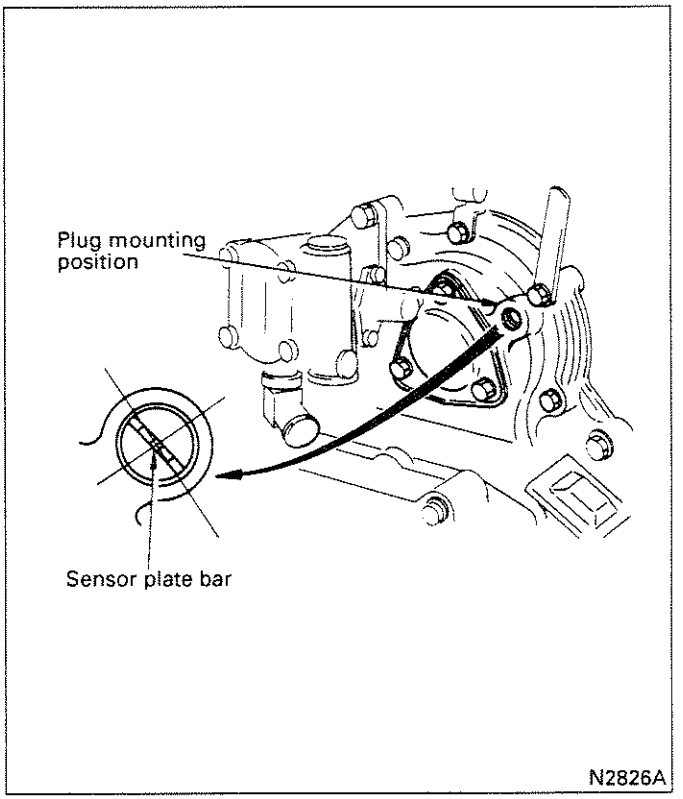

(c) Remove the plug, look through the threaded hole to verify that the sensor plate bar is positioned at the center of the hole, and then secure the air compressor.

(d) When the sensor plate bar is not positioned at the center of the threaded hole, withdraw the air compressor, and re-perform Step (b).

NOTE:
If the meshing teeth of the injection pump gear and camshaftgear are one tooth different, about one half of the sensor plate bar will be hidden from the threaded hole.

5.1.2 Disassembly

<6D2>
(1-cylinder type)

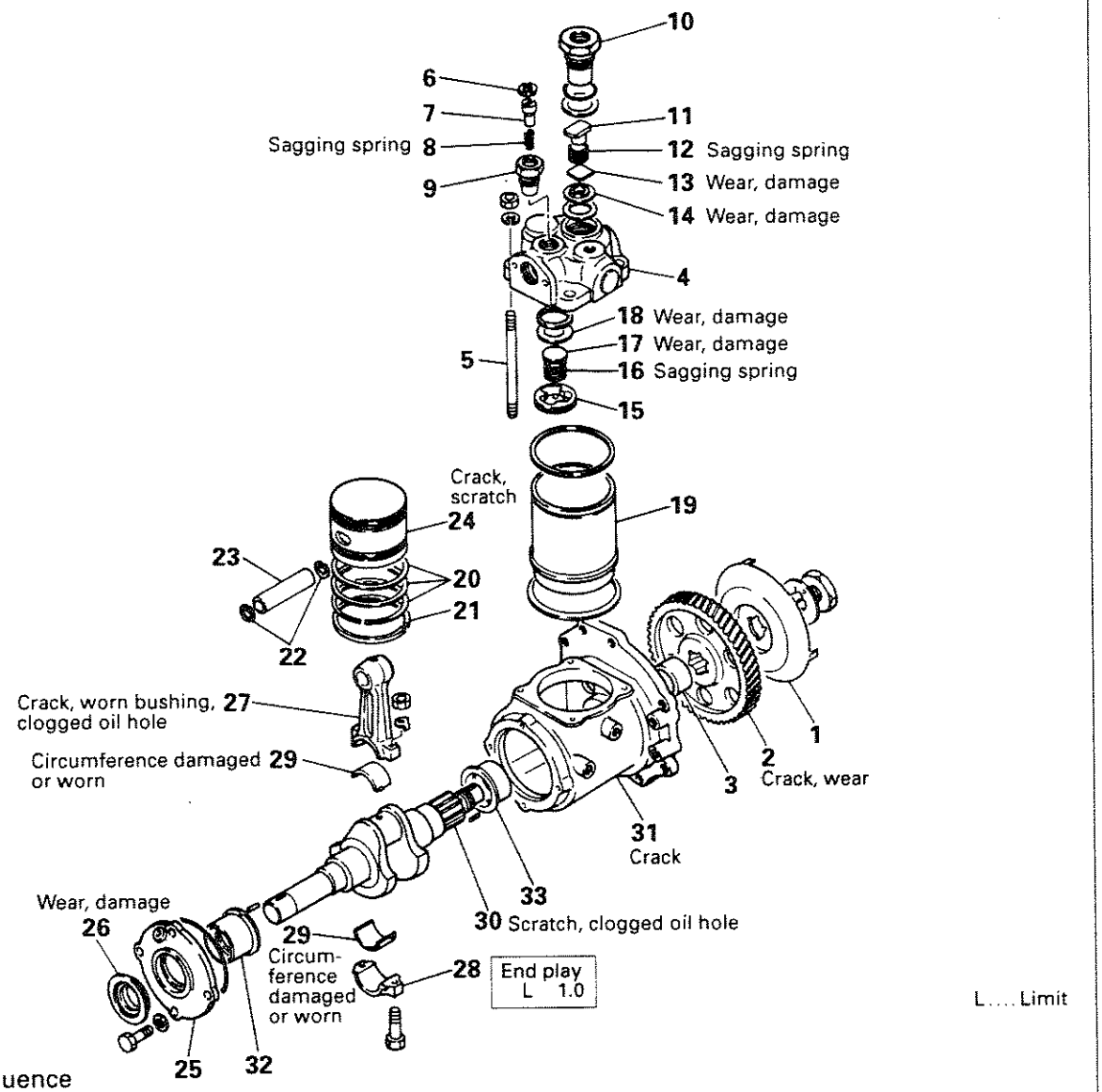

Disassembly sequence

1 Sensor plate
2 Injection pump gear
3 Collar
4 Cylinder head
5 Stud bolt
6 Snap ring
7 Unloader valve
8 Valve spring
9 Valve guide
10 Delivery valve holder
11 Spring holder
12 Delivery valve spring
13 Delivery valve
14 Delivery valve seat
⑮ Suction valve holder
16 Suction valve spring
17 Suction valve
18 Suction valve seat
19 Cylinder liner
⑳ Compression ring
㉑ Oil ring
22 Snap ring
23 Piston pin
24 Piston
25 Bearing holder
26 Oil seal
27 Connecting rod
28 Connecting rod cap
29 Connecting rod bearing
30 Crankshaft
31 Crankcase
*32 Bearing
*33 Bearing

For parts with an encircled number, refer to Disassembly Procedure that follows.
Parts marked with * should not be removed unless defects are evident.

D9252A

(2-cylinder type)

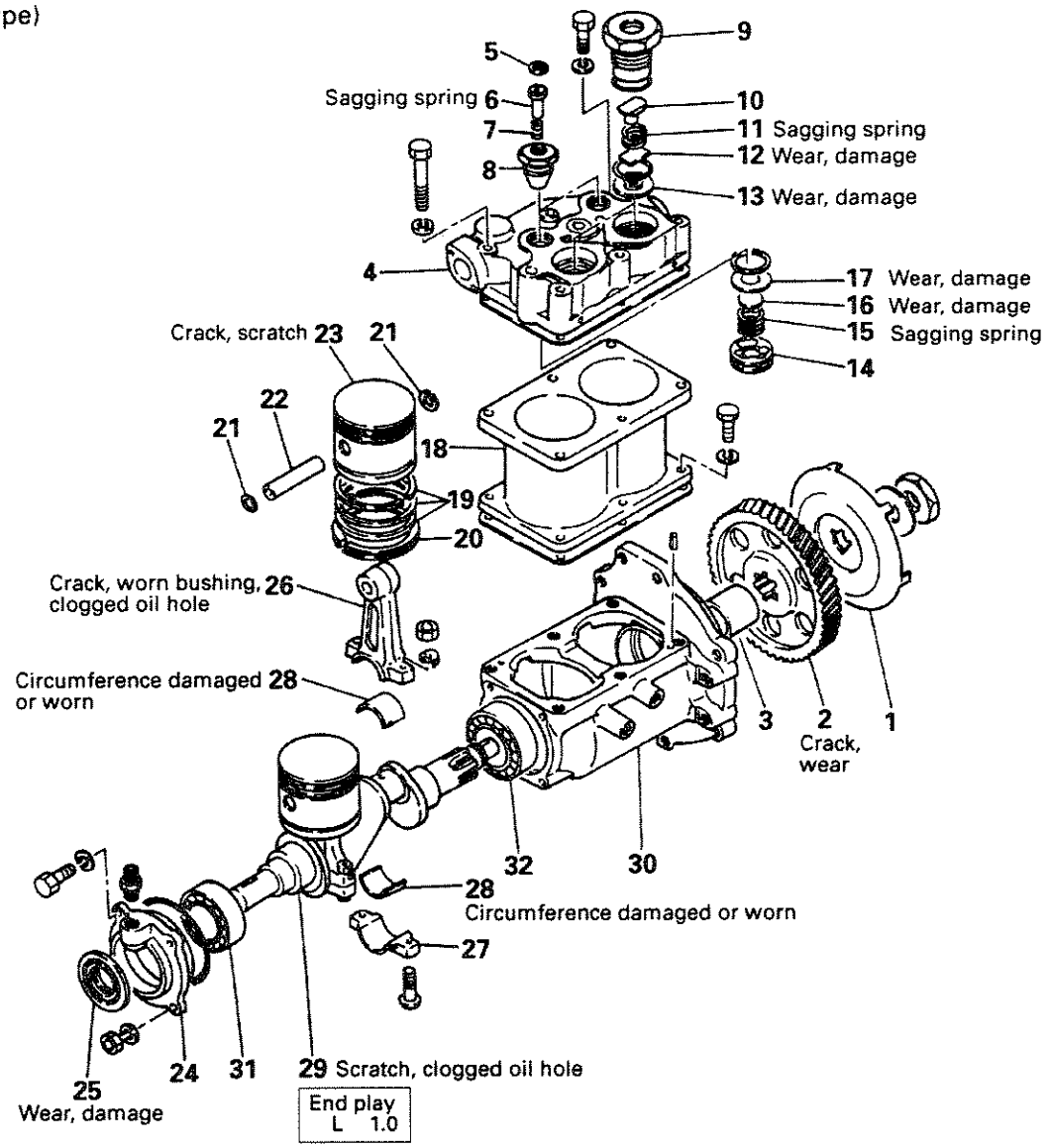

Disassembly sequence

1 Sensor plate
2 Injection pump gear
3 Collar
4 Cylinder head
5 Snap ring
6 Unloader valve
7 Valve spring
8 Valve guide
9 Delivery valve holder
10 Spring holder
11 Delivery valve spring
12 Delivery valve
13 Delivery valve seat
⑭ Suction valve holder
15 Suction valve spring
16 Suction valve
17 Suction valve seat
18 Cylinder liner
⑲ Compression ring
⑳ Oil ring
21 Snap ring
22 Piston pin
23 Piston
24 Bearing holder
25 Oil seal
26 Connecting rod
27 Connecting rod cap
28 Connecting rod bearing
29 Crankshaft
30 Crankcase
31 Bearing
32 Bearing

For parts with an encircled number, refer to Disassembly Procedure that follows.

09641

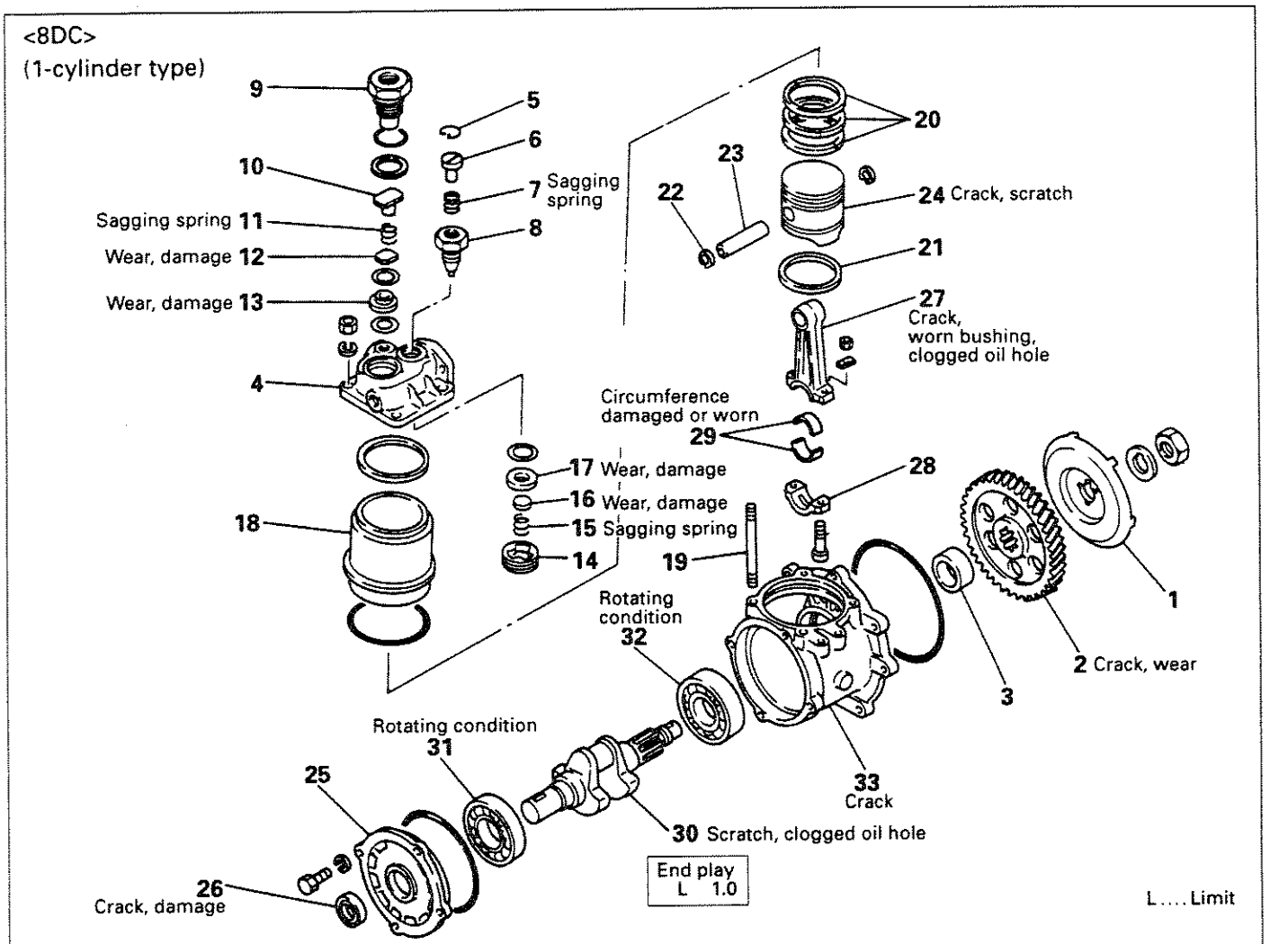

Disassembly sequence

1 Sensor plate
2 Injection pump gear
3 Spacer
4 Cylinder head
5 Snap ring
6 Unloader valve
7 Valve spring
8 Valve guide
9 Delivery valve holder
10 Spling holder
11 Delivery valve spring
12 Delivery valve
13 Delivery valve seat
⑭ Suction valve holder
15 Suction valve spring
16 Suction valve
17 Suction valve seat
18 Cylinder liner
19 Stud
⑳ Compression ring
㉑ Oil ring
22 Snap ring
23 Piston pin
24 Piston
25 Bearing holder
26 Oil seal
27 Connecting rod
28 Connecting rod cap
29 Connecting rod bearing
30 Crankshaft
31 Bearing
32 Bearing
33 Crankcase

For parts with an encircled number, refer to Disassembly Procedure that follows.

N2750A

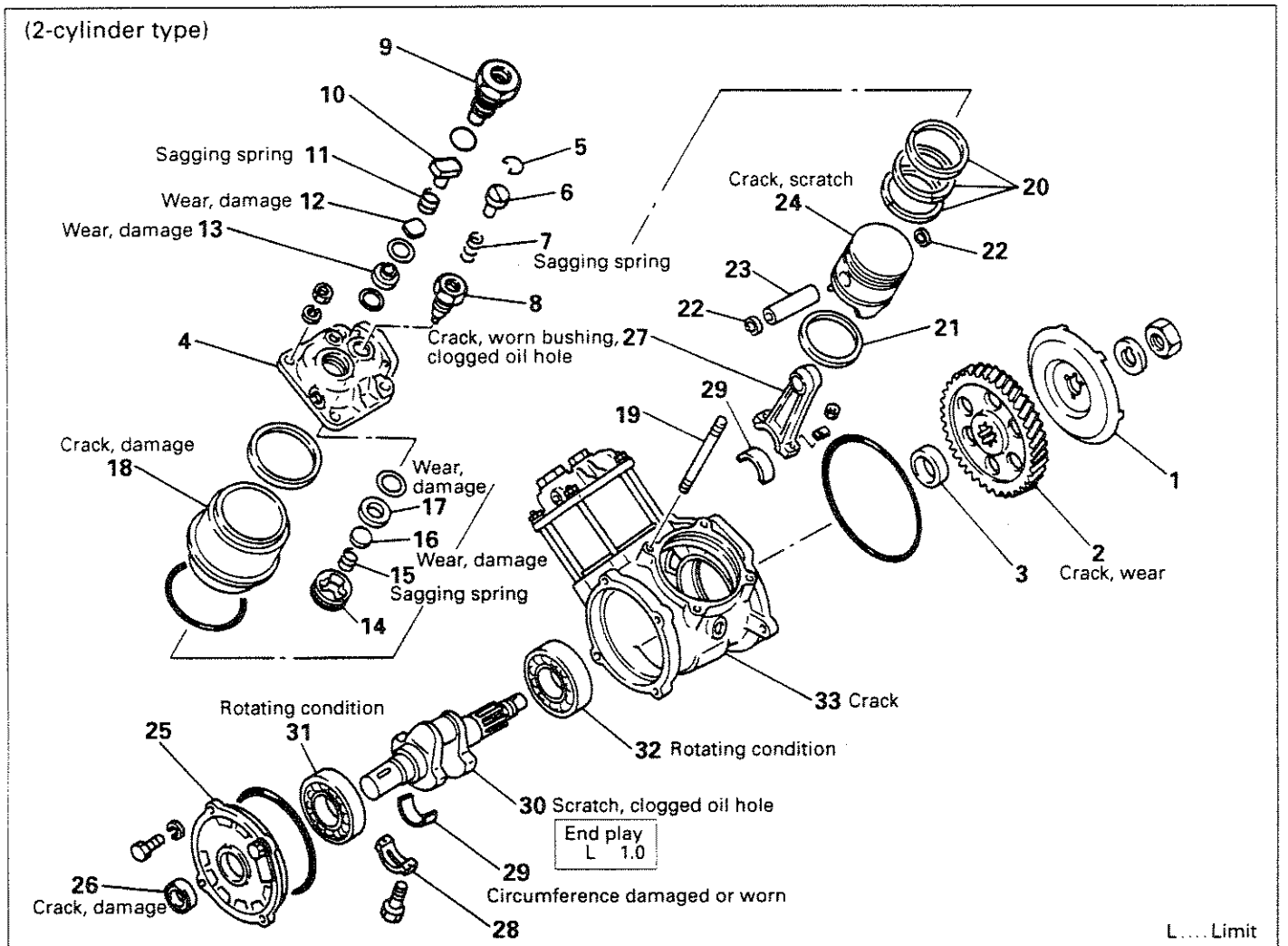

Disassembly sequence

1 Sensor plate
2 Injection pump gear
3 Spacer
4 Cylinder head
5 Snap ring
6 Unloader valve
7 Valve spring
8 Valve guide
9 Delivery valve holder
10 Spring holder
11 Delivery valve spring
12 Delivery valve
13 Delivery valve seat
⑭ Suction valve holder
15 Suction valve spring
16 Suction valve
17 Suction valve seat
18 Cylinder liner
19 Stud
⑳ Compression ring
㉑ Oil ring
22 Snap ring
23 Piston pin
24 Piston
25 Bearing holder
26 Oil seal
27 Connecting rod
28 Connecting rod cap
29 Connecting rod bearing
30 Crankshaft
31 Rear Bearing
32 Front Bearing
33 Crankcase

For parts with an encircled number, refer to Disassembly Procedure that follows.

N2877A

Disassembly Procedure

(1) Disassembly of suction valve holder

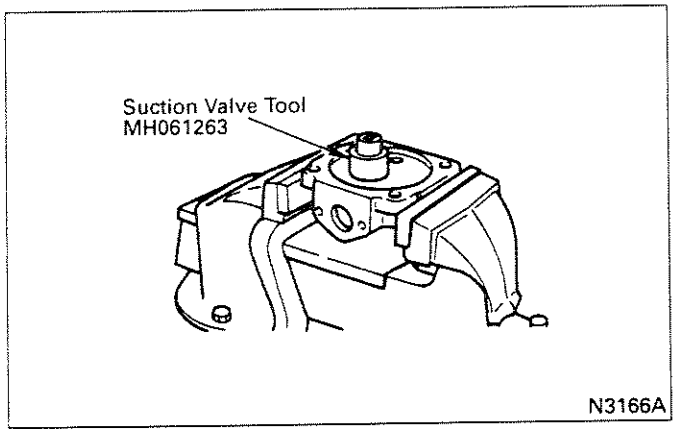

NOTE:
Since the suction valve holder is staked by punching, do not attempt disassembly unless trouble is evident.

(2) Disassembly of piston ring

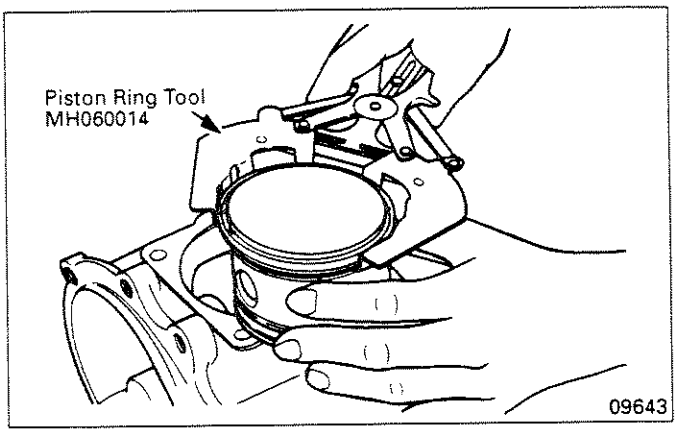

NOTE:
When a piston ring is removed, do not widen the open ends of the piston ring more than 28 mm for 1-cylinder type and more than 26 mm for 2-cylinder type.

5.1.3 Inspection

<6D2>
(1-cylinder type)

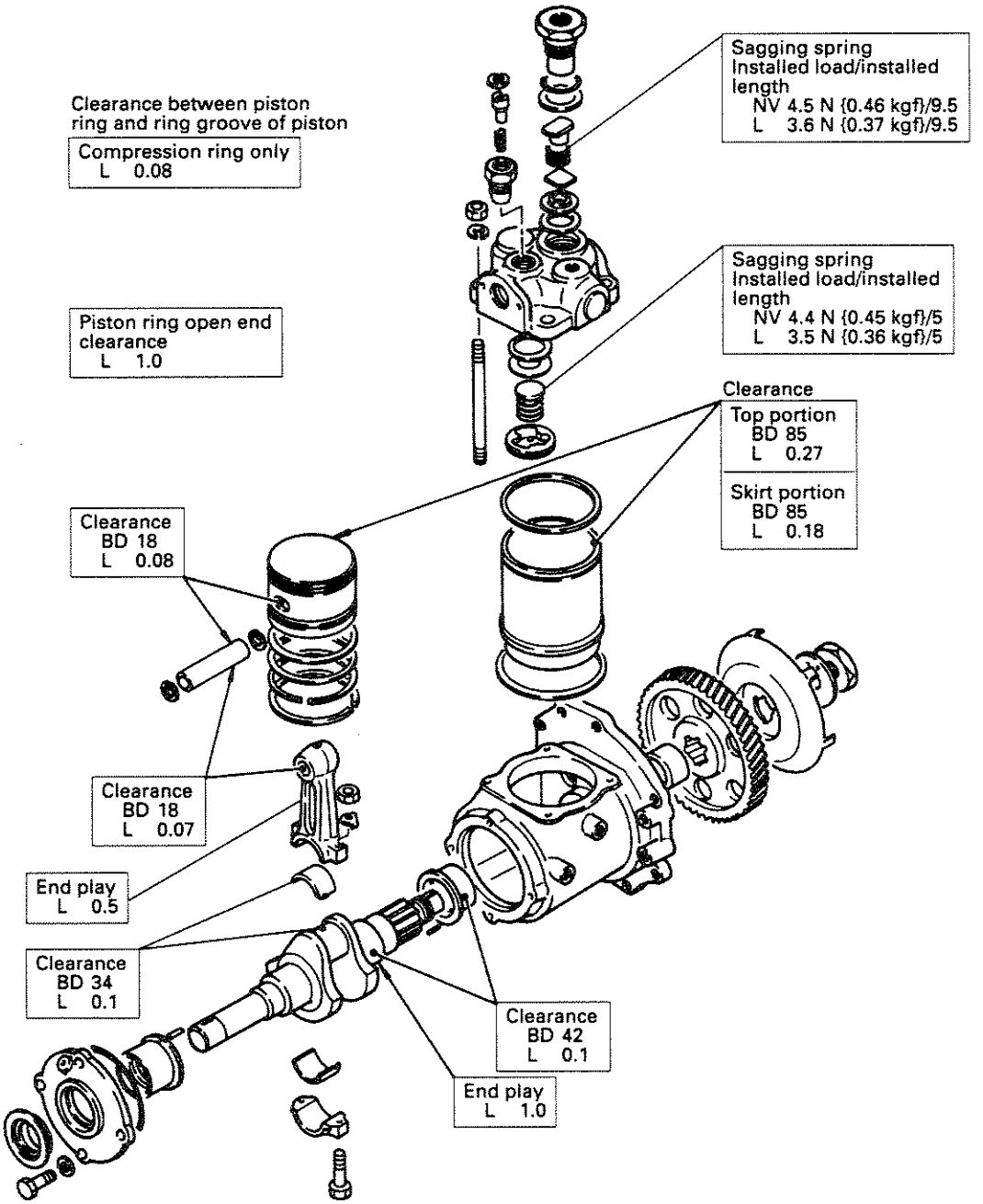

BD .. Basic Diameter
NV .. Nominal Value
L..... Limit

D9252B

(2-cylinder type)

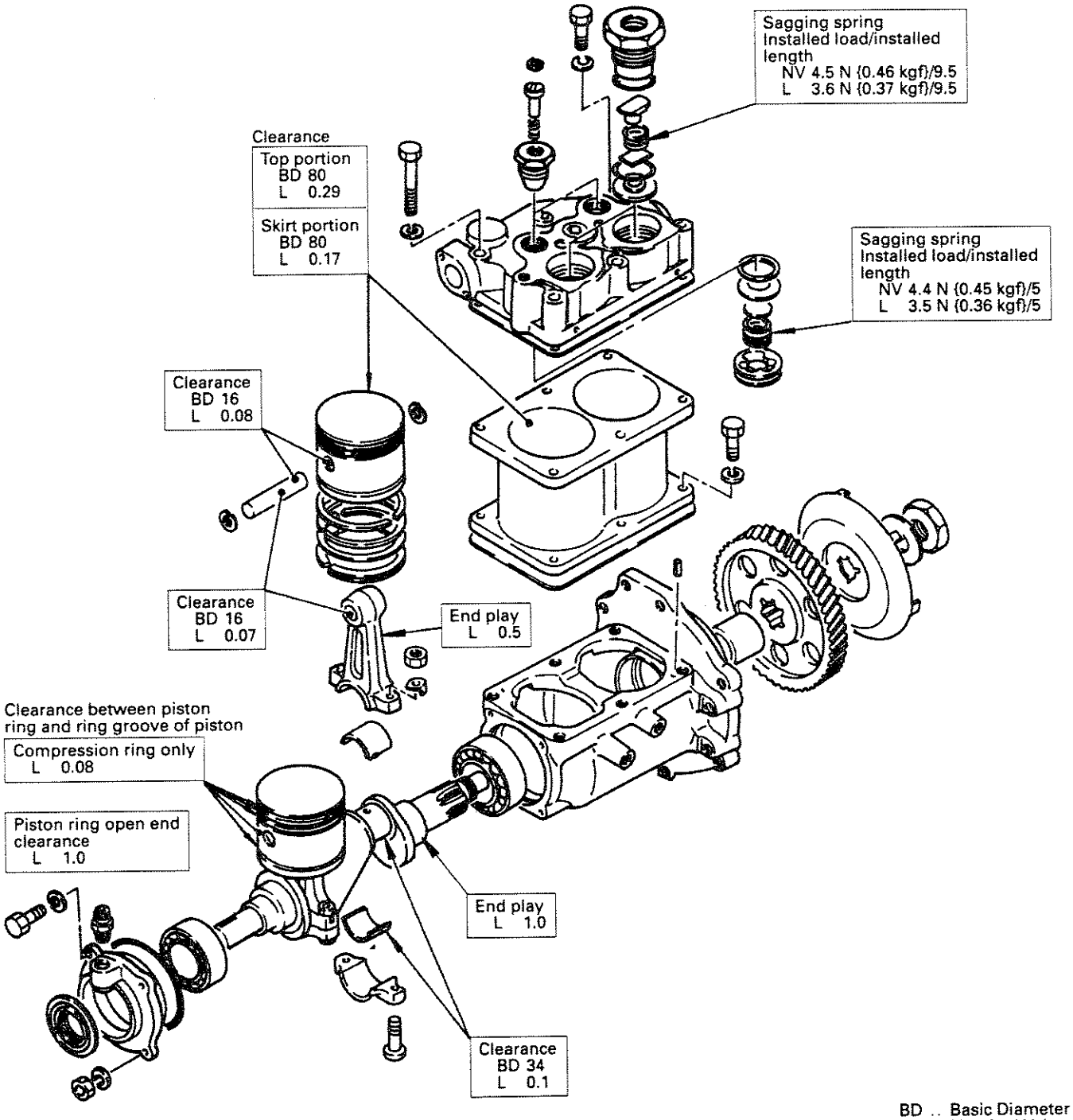

BD .. Basic Diameter
NV .. Nominal Value
L..... Limit

09646

<8DC>
(1-cylinder type)

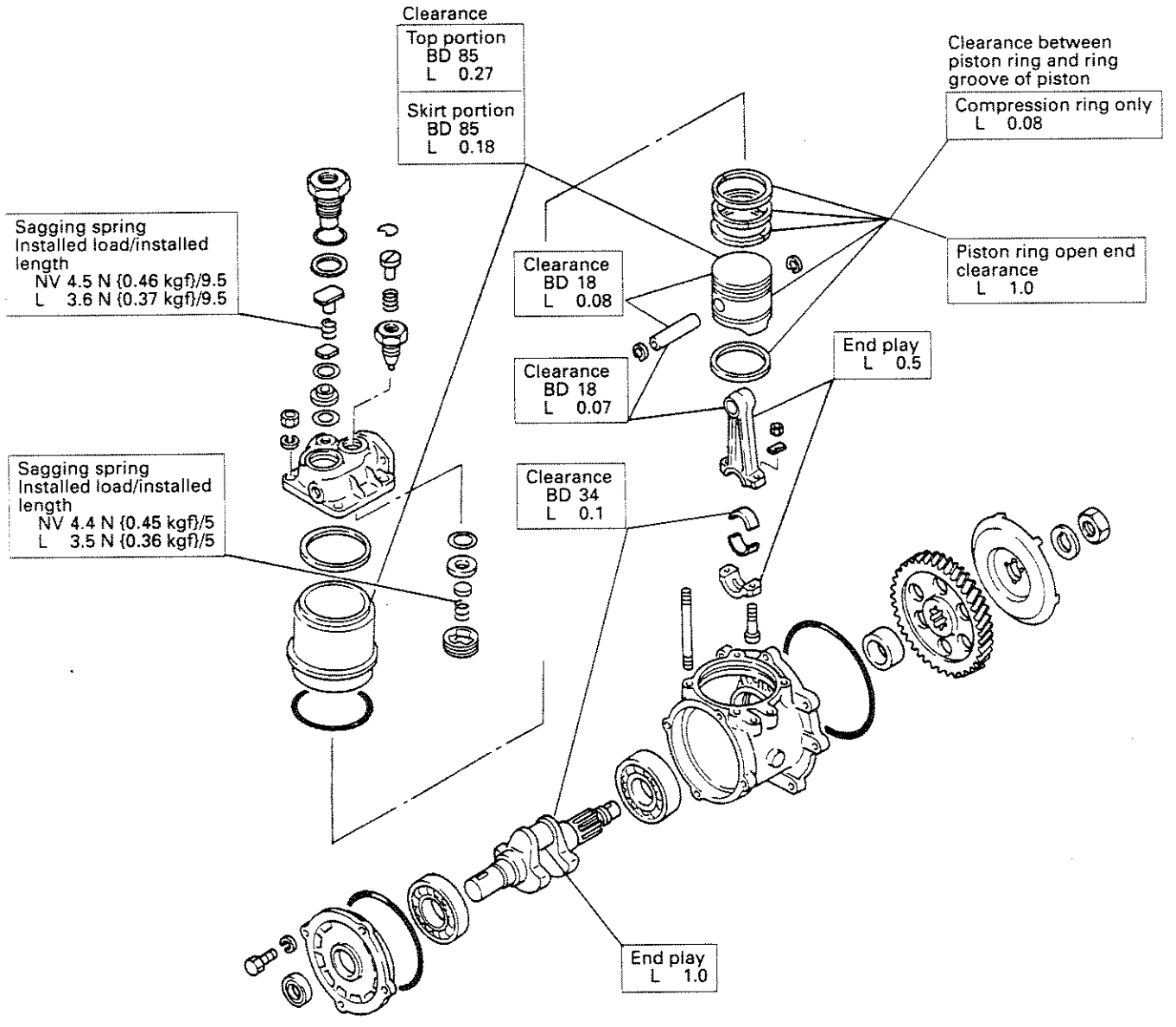

BD .. Basic Diameter
NV .. Nominal Value
L..... Limit

N2752A

(2-cylinder type)

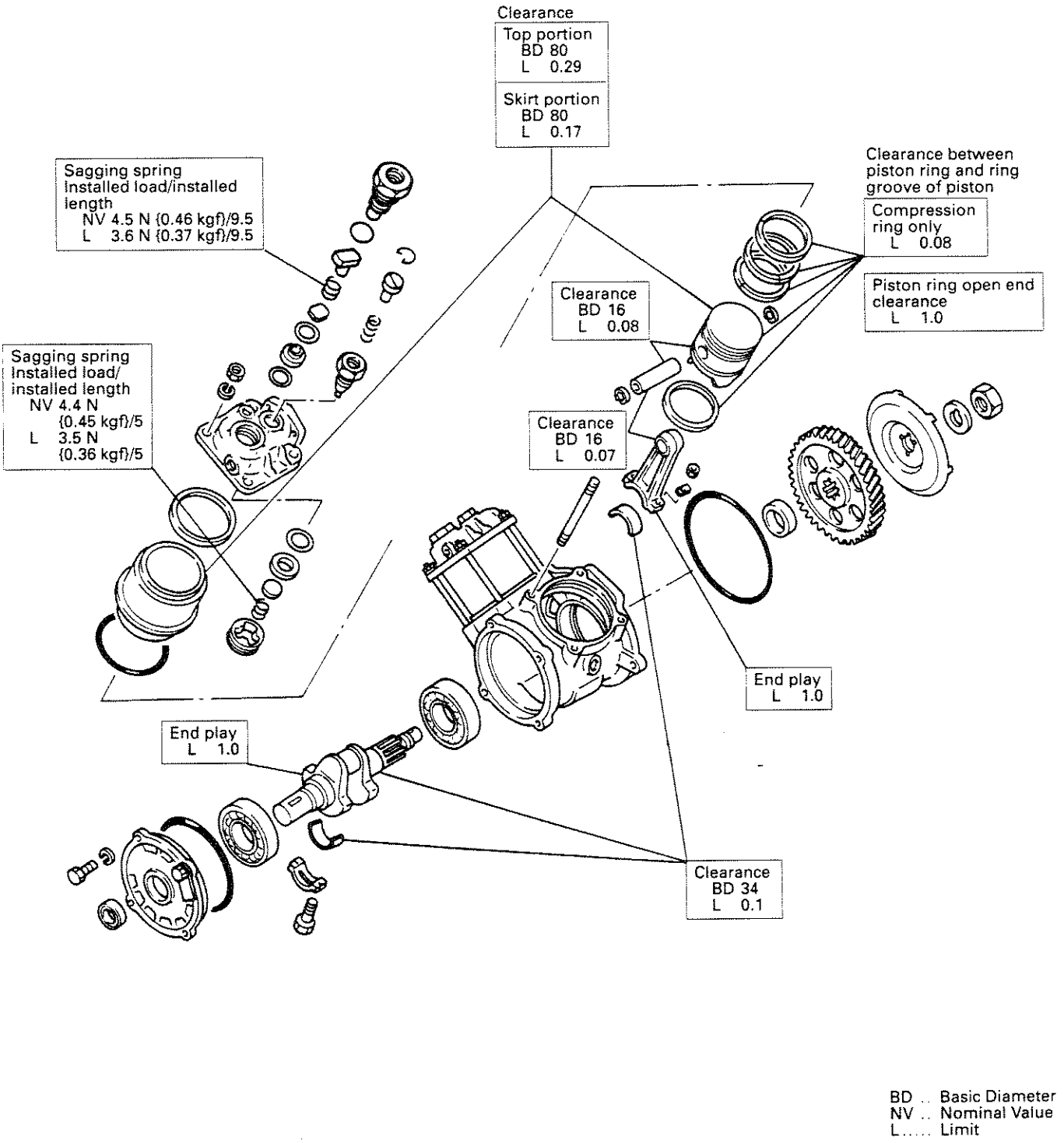

Inspection Procedures

(1) Piston to cylinder clearance

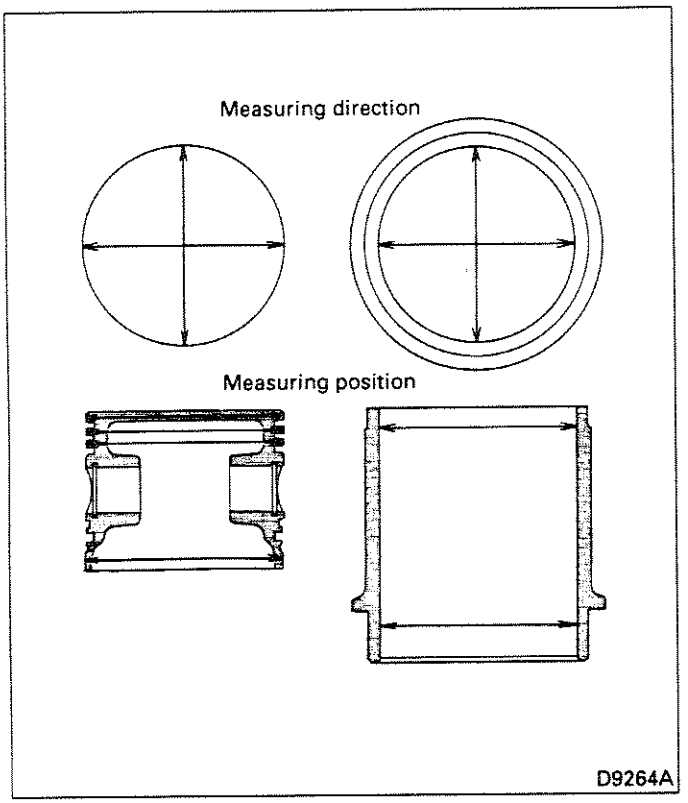

If the clearance is over the limit, replace the piston or cylinder liner.

(2) Piston ring and piston ring groove clearance

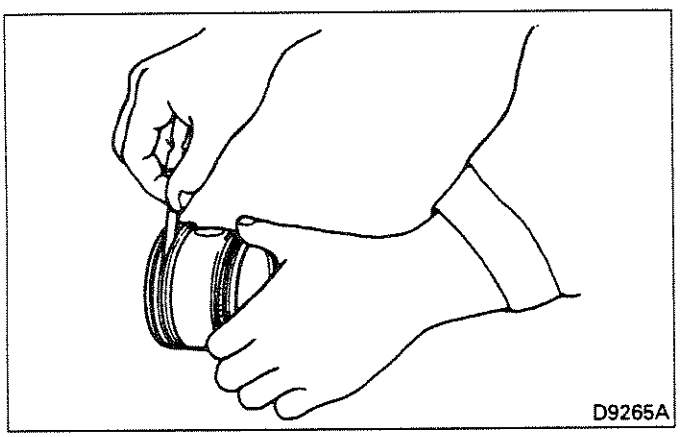

If the clearance is over the limit, replace the compression ring or piston.

NOTE:
Measure the clearance all around the piston.

(3) Piston ring open end clearance

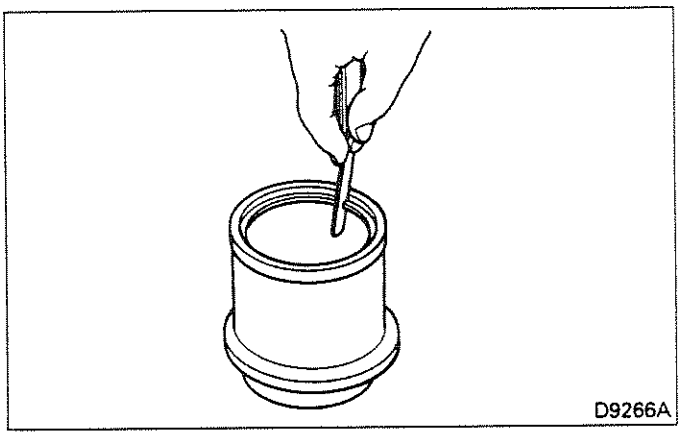

Fit the piston ring over a standard gauge or new cylinder liner and measure the open end clearance. If the clearance is over the limit, replace the piston ring.

NOTE:
Push the piston in and measure the clearance with the piston ring in horizontal position.

(4) Piston to piston pin clearance

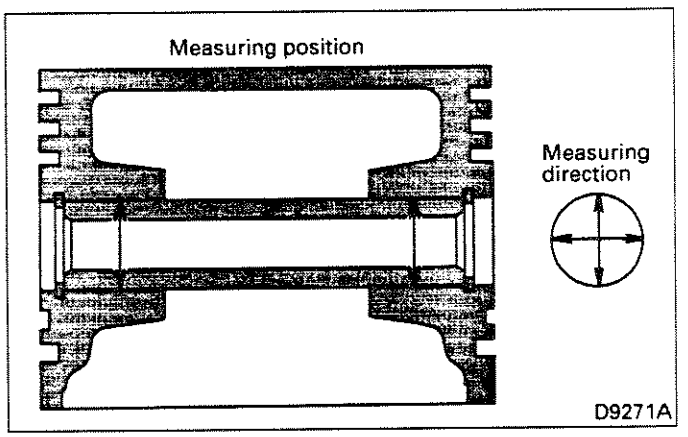

Calculate the clearance. If it is in excess of the limit, replace the piston or piston pin.

(5) Piston pin and connecting rod clearance

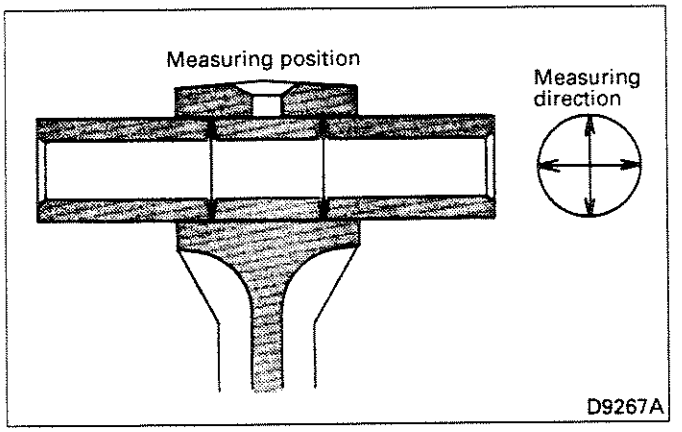

If the clearance is over the limit, replace the piston pin or connecting rod.

(6) Crankshaft and connecting rod bearing clearance

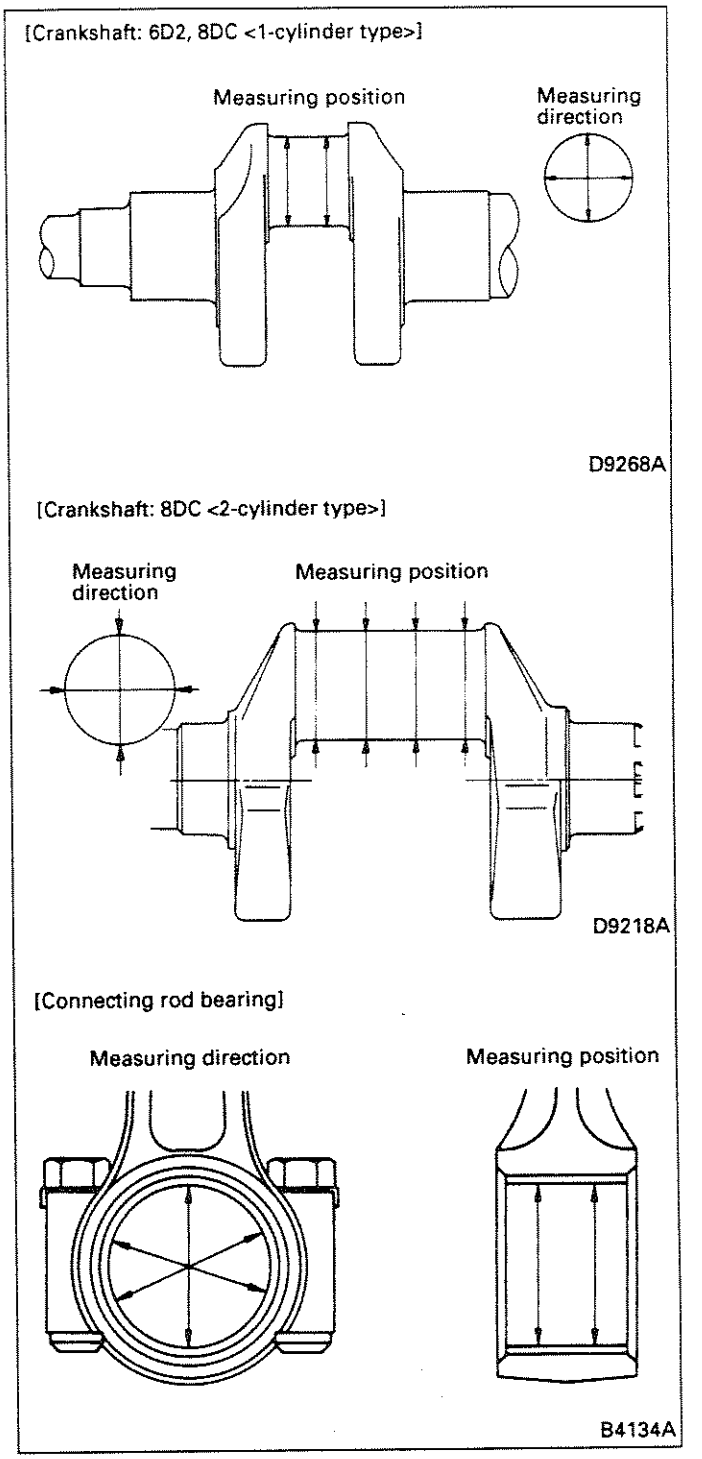

Calculate the clearance. If it is in excess of the limit, replace the bearing or crankshaft.

(7) Clearance between crankshaft journal and bearing <6D2 only>

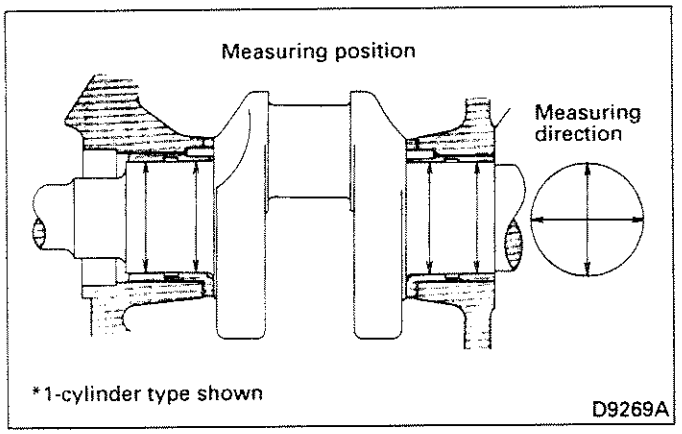

Calculate the clearance. If it is in excess of the limit, replace the parts.

(8) Connecting rod end play

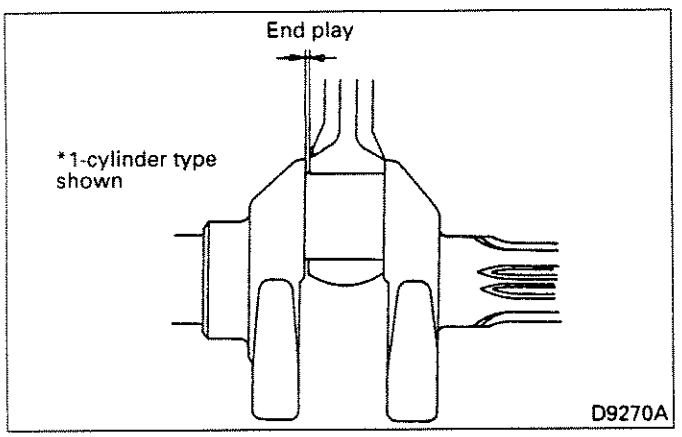

If the play exceeds the limit, replace the connecting rod.

NOTE:

On a 2-cylinder type compressor, measure the end play with both connecting rods pushed to one side.

(9) Unloader valve assembly

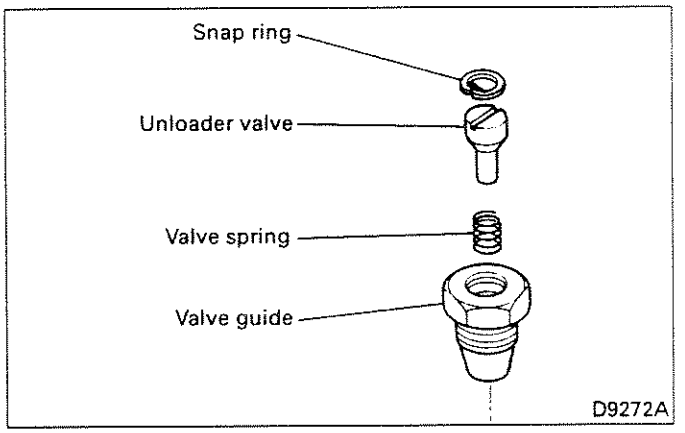

If the unloader valve in unloader valve assembly is badly worn, replace the unloader valve assembly.

5.1.4 Reassembly

<6D2>
(1-cylinder type)

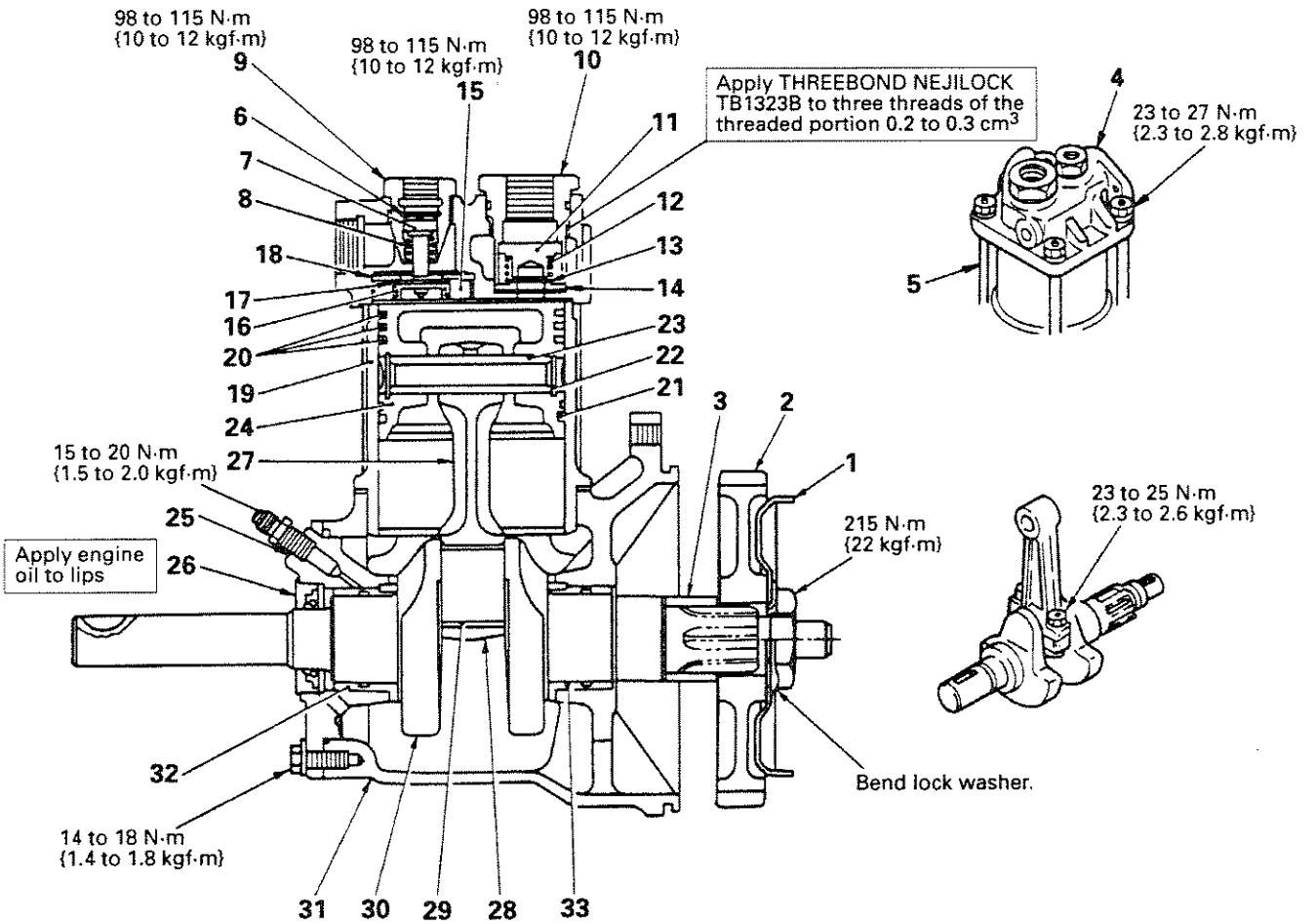

Reassembly sequence

31→32→33→30→29→㉘→㉗→25→26→24→23→22→㉑→⑳→19→5→4→3→②→①

14→13→12→11→10→18→17→16→⑮→
8→7→6→9

For parts with an encircled number, refer to Reassembly Procedure that follows.

B3256B

(2-cylinder type)

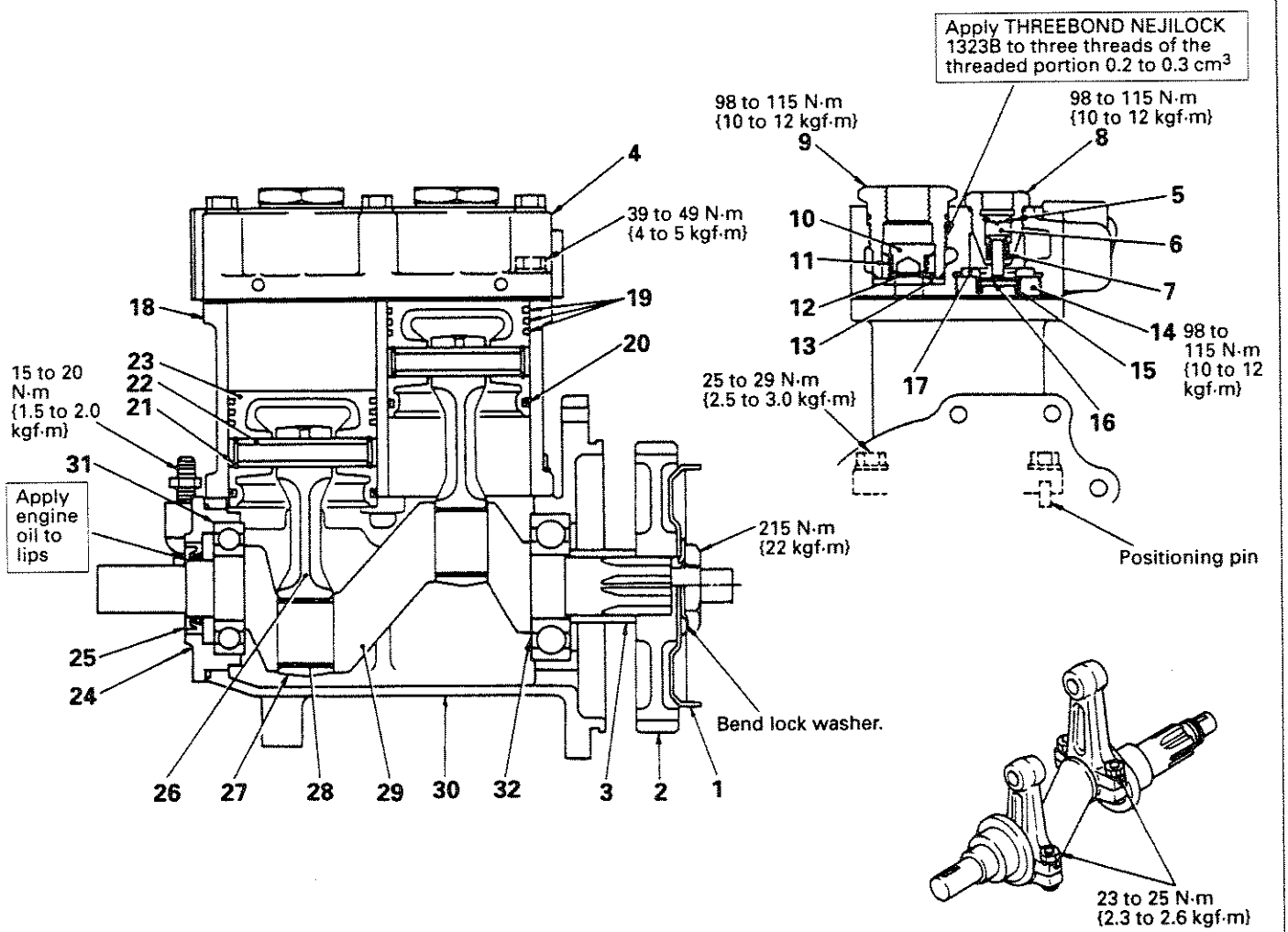

Reassembly sequence

30→32→31→29→24→25→28→㉗→㉖→23→22→21→⑳→⑲→18→4→3→②→①

13→12→11→10→9→17→16→15→⑭→

8→7→6→5

For parts with an encircled number, refer to Reassembly Procedure that follows.

09644

<8DC>
(1-cylinder type)

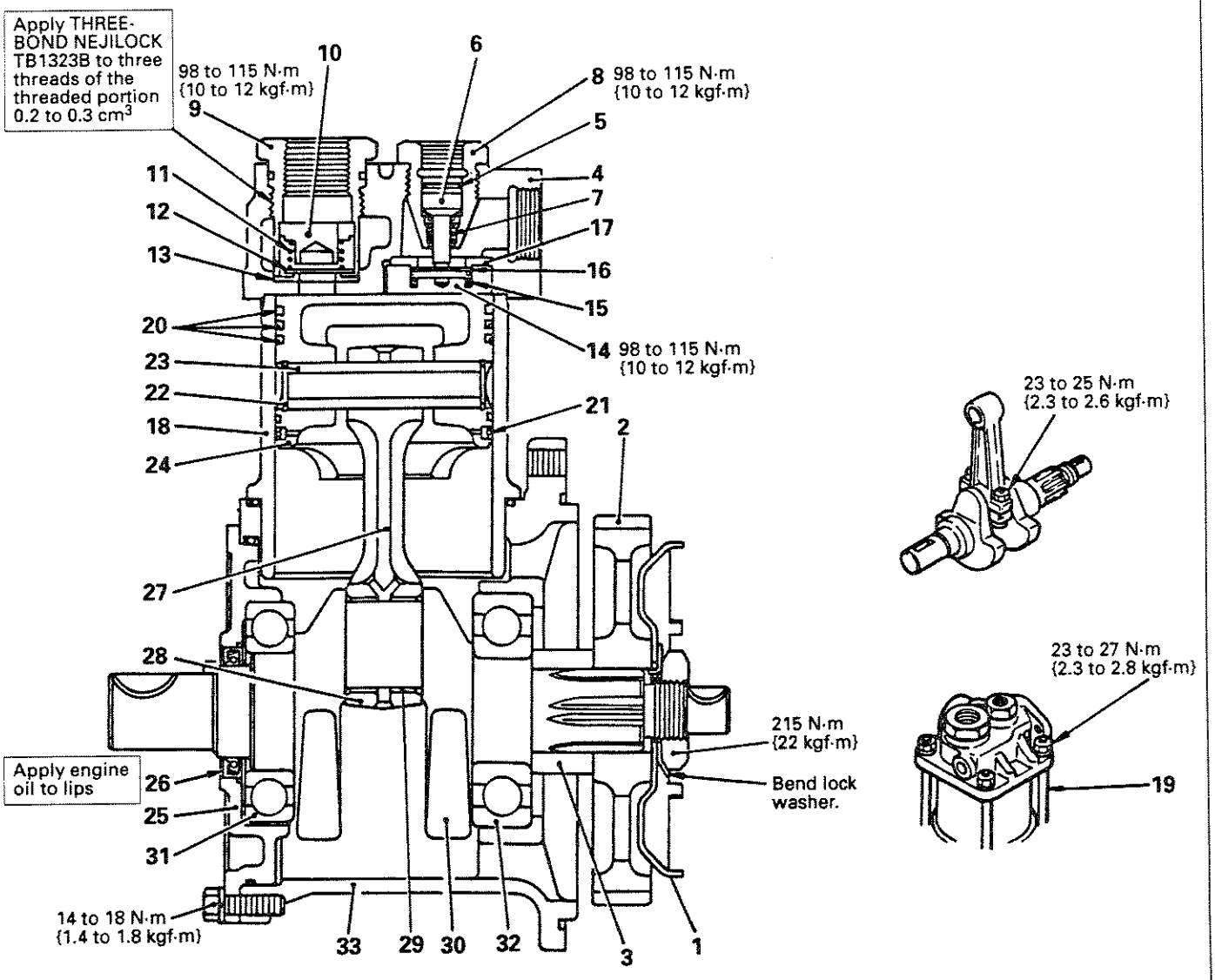

Reassembly sequence

30→32→31→33→25→26→㉗→29→㉘→24→㉑→㉚→23→22→19→18→4→3→②→①

13→12→11→10→9→17→16→15→⑭→

8→7→6→5

For parts with an encircled number, refer to Reassembly Procedure that follows.

N2754A

(2-cylinder type)

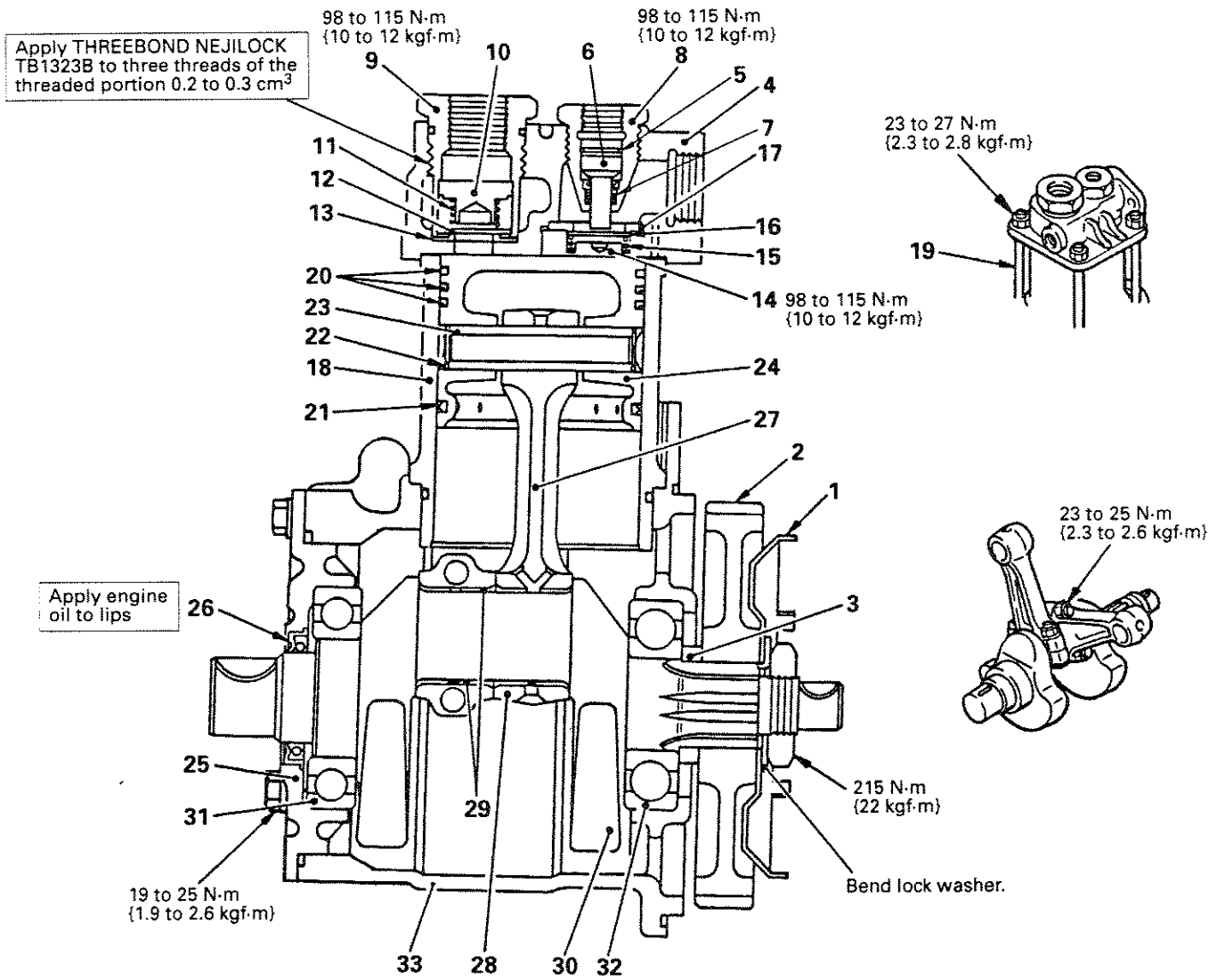

Reassembly sequence

30→32→31→33→25→26→㉗→29→㉘→㉑→⑳→24→23→22→19→18→4→3→②→①

13→12→11→10→9→17→16→15→⑭→

8→7→6→5

For parts with an encircled number, refer to Reassembly Procedure that follows.

D9222D

Reassembly Procedure

(1) Assembly of connecting rod

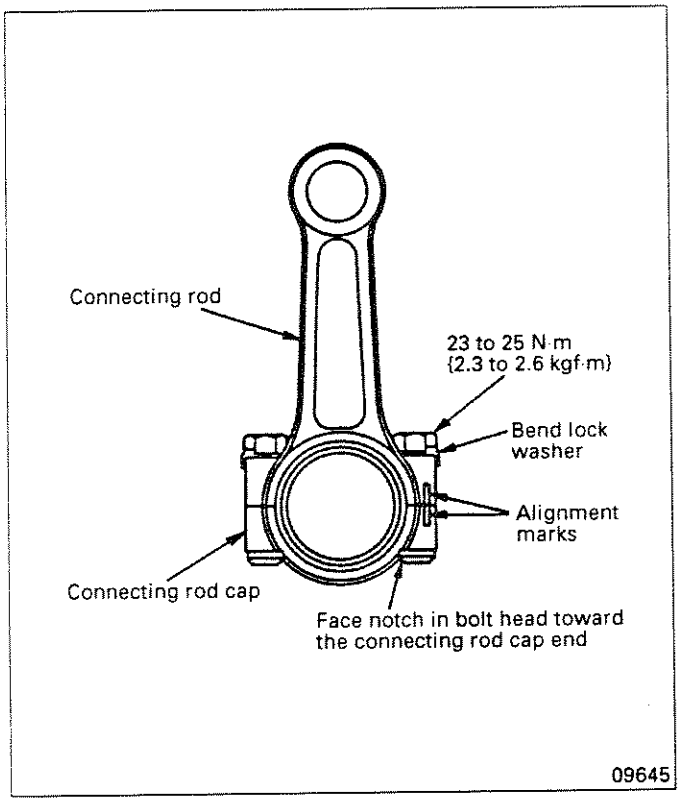

Make sure that the alignment mark on the connecting rod is aligned with that on the connecting rod cap.

(2) Installation of piston rings

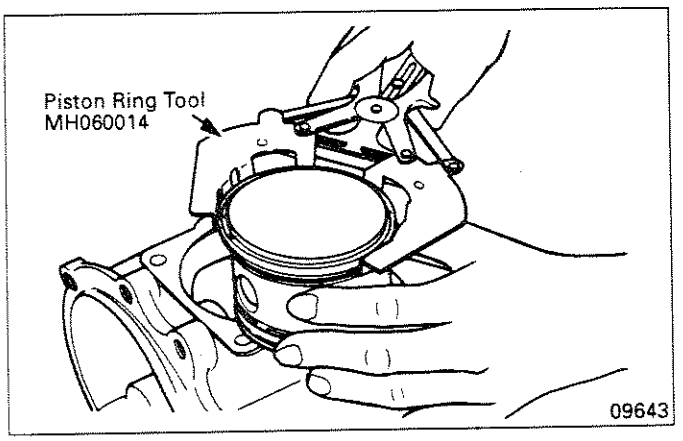

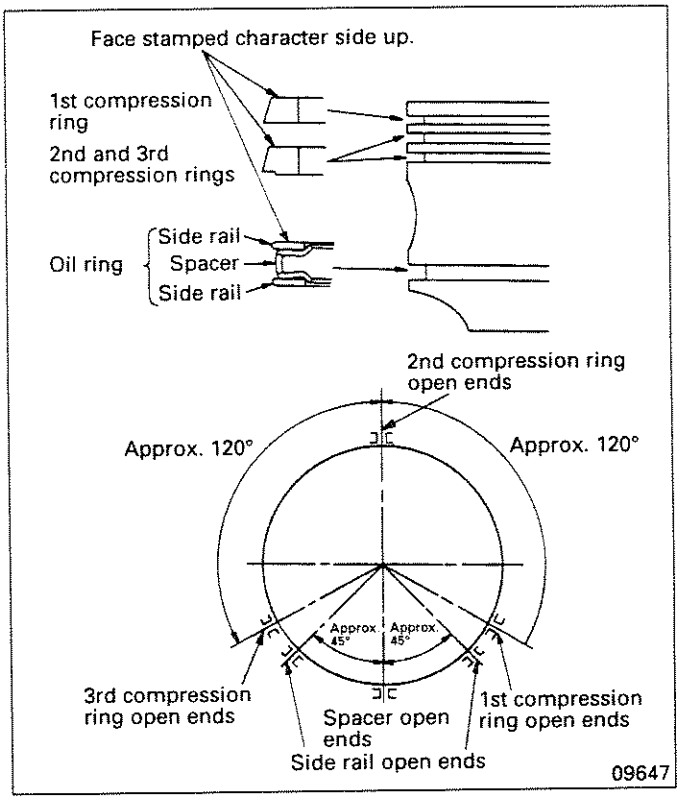

Install each piston ring in place and locate their ends as shown in the illustration.

(3) Installation of suction valve holder

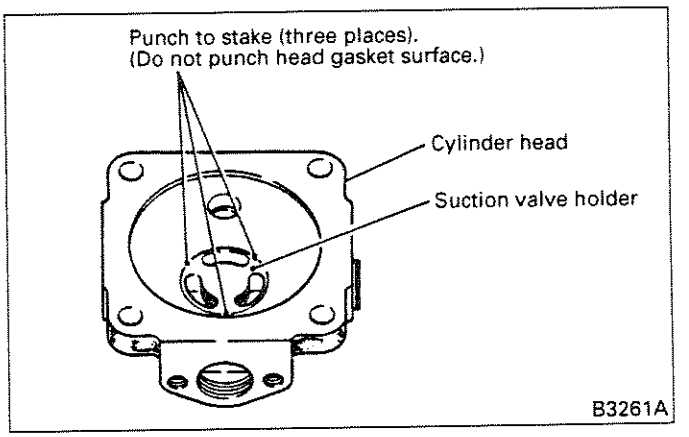

Stake the cylinder head at three places shown over the suction valve holder.

(4) Installation of injection pump gear

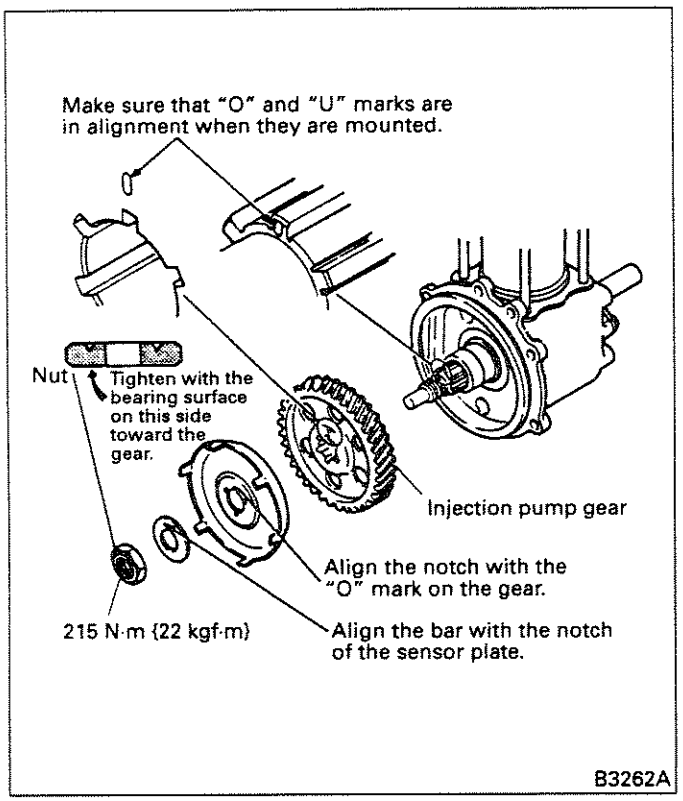

Install the injection pump gear, sensor plate (guide plate), and nut as instructed in the illustration.

5.2 Air Pressure Governor

5.2.1 Disassembly and inspection

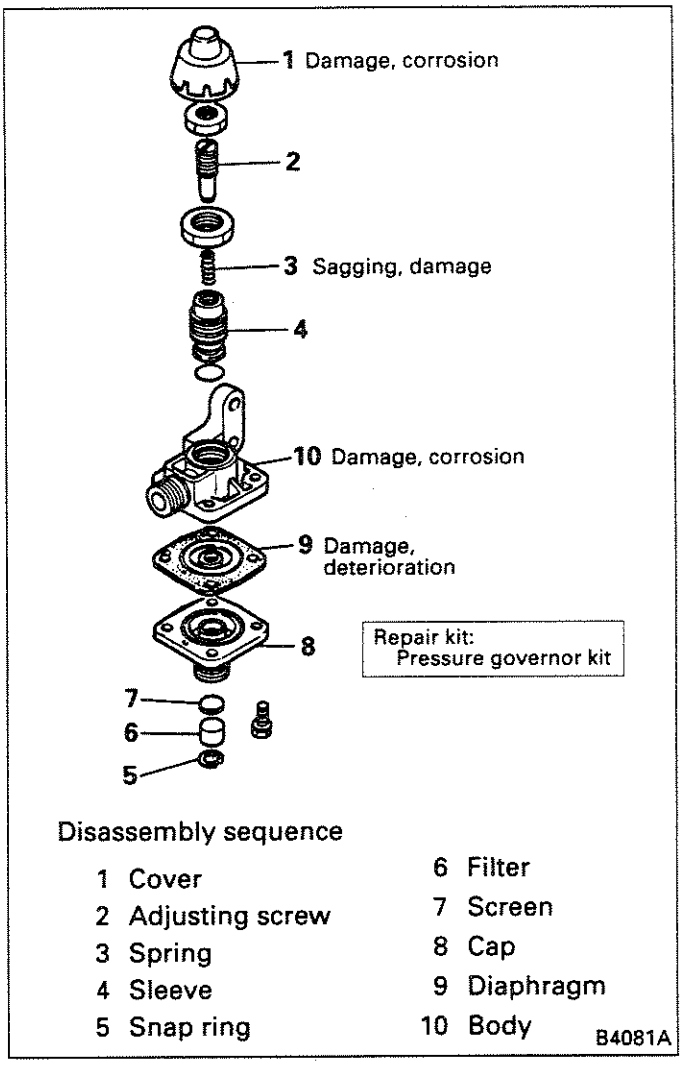

Disassembly sequence

1 Cover	6 Filter
2 Adjusting screw	7 Screen
3 Spring	8 Cap
4 Sleeve	9 Diaphragm
5 Snap ring	10 Body

5.2.2 Reassembly and adjustment

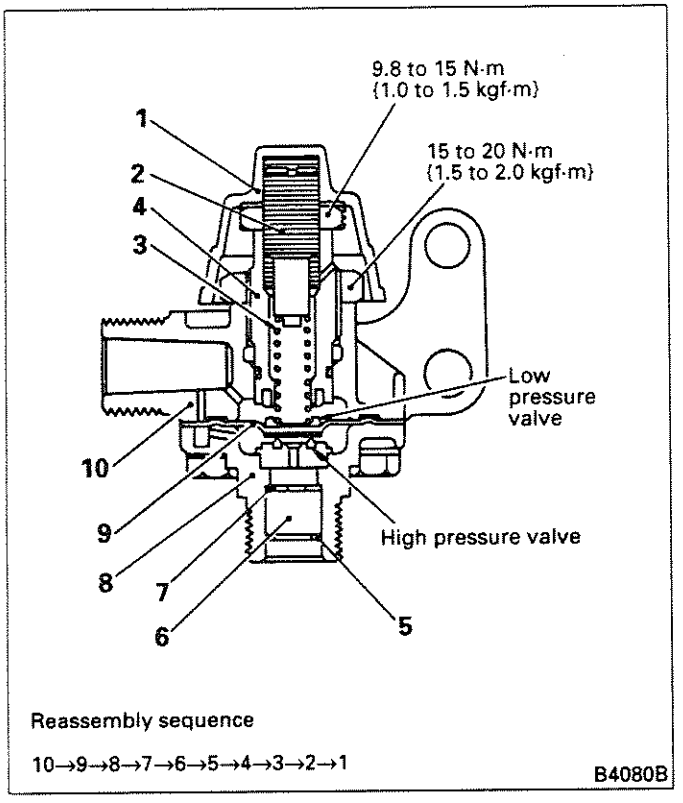

High and low pressure valve opening pressure

Part No.	Nominal value	
	High pressure valve opening pressure	Low pressure valve opening pressure
MC802148	$715^{+34}_{-4.9}$ kPa $\{7.3^{+0.35}_{-0.05}$ kg/cm$^2\}$	$625^{+4.9}_{-34}$ kPa $\{6.4^{+0.05}_{-0.35}$ kg/cm$^2\}$
MC802150	$784^{+34}_{-4.9}$ kPa $\{8.0^{+0.35}_{-0.05}$ kg/cm$^2\}$	$695^{+4.9}_{-34}$ kPa $\{7.1^{+0.05}_{-0.35}$ kg/cm$^2\}$

Testing

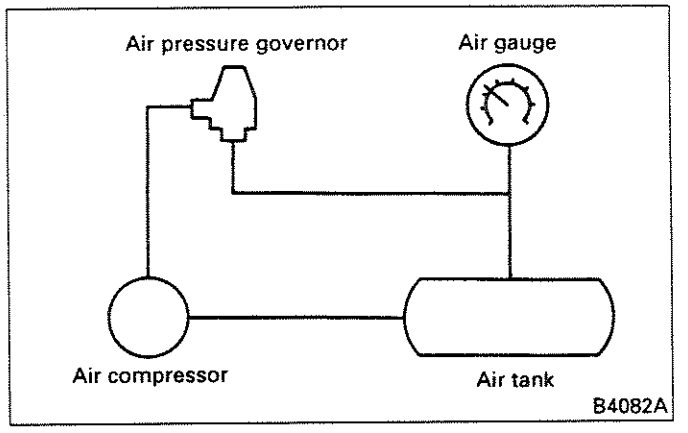

(1) Connect an air gauge between the air pressure governor and air tank.
(2) Start the engine and increase air pressure slowly while observing the air gauge. Check that the reading of the gauge when it has stabilized is as specified (high pressure valve opening pressure).
If not, adjust by adjusting tightening amount of the sleeve. After adjustment, tighten firmly with the lock nut.
(3) Slowly decrease the air tank pressure and check that the air gauge reading starts to increase when the nominal pressure (low pressure valve opening pressure) is reached.
For adjustment, use the adjusting screw. After adjustment, tighten firmly with the lock nut.
(4) After tightening the lock nut, check again the high and low pressure valve opening pressures. If they are out of specification, adjust again.
(5) Install and seal the cover.

6D2.8DC

diesel engine

Shop Manual

MITSUBISHI MOTORS CORPORATION

JULY 1995

315(H)

Pub. No. 97841-02010

MITSUBISHI MOTORS CORPORATION

JULY '95H Printed in Japan