■ KDGC-2001
Katolight Digital Genset Controller

Katolight's Digital Genset Controller (KDGC-2001) offers a low cost microprocessor based integrated alternative for small to medium sized genset control and monitoring. Control includes engine starting and shutdown as well as system monitoring and remote annunciation. KDGC-2001 allows user inputs and programming to provide a reliable, customizable genset controller. This unique design has features not found on any competitive models. It monitors and displays up to eight engine and generator parameters on the front panel and up to a total of 28 parameters via the front panel scrolling feature.

FEATURES

- Microprocessor based design
- Permanently displays eight parameters
- Displays 28 generator set parameters
- Controls engine starting and shutdown
- Front panel programmability
- PC settable via the serial link
- LCD display with backlighting
- Programmable engine cranking
- Programmable alarm setpoints
- NFPA 110 Level 1 compatible
- Optional dial out modem
  informs a pager of alarm or pre-alarm
  four phone number capability
- Additional I/O (Optional)
  four input and eight output contacts, inputs labeled for LCD display, programmable outputs
- Remote annunciation via Katolight's model KRDP-110
- Enhanced Communication Option
  provides remote start-stop control, viewing of faults, metering of parameters. Requires internal modem option

SPECIFICATIONS

Environmental Specifications

- Vibration: 10 to 500 Hz at 2 Gs
- Shock: 15 Gs in each of three mutually perpendicular axes
- Ambient operating temperature: -40°C to +70°C
- Salt Fog Testing: Per ASTM 117B-1989 for 100 hours
- Weight: 1.9 pounds (0.86 kilograms)

SPECIFICATIONS (CONT.)

Inputs

DC Power Input (Battery)

- 12Vdc nominal systems (8-16Vdc)
- 24Vdc nominal systems (16-32Vdc)
  (Both Negative Ground systems)
- Power dissipated is 16 Watts

General Voltage Input: 12-576Vac continuous, 50/60 Hz at less than 1 VA

Generator Line Current: 1 or 5 Amp at less than 1 VA

Oil Pressure Sender: 0 to 100 PSI (34-240Ω)

Coolant Temperature: 100°F to 300°F (37°C to 149°C) (62.6-637.5Ω)

Speed Input: Magnetic pickup 3V peak minimum to 35V. Peak into a 10kΩ (32Hz-10kHz) impedance

Fuel Level: 0-100% (240-33Ω)

Contact Sensing Inputs: Emergency Stop, Low Coolant Level, Automatic Transfer Switch

Outputs

Contact Ratings:

10A at 24 Vdc make, break, and carry
(Crank, Fuel solenoid)
2A at 24 Vdc make, break, and carry
(EPS supplying load, Alarms, Pre-Alarms, Pre-start pre-alarms)

Monitoring

GENERATOR

- **Generator Voltage:** 0 to 600 Vac
  Display range is 0 to 15,000 V
  Accuracy is ±0.5% of indication or 1 a RMS at 25°C
  (with Phase selection switch and panel indication)
- **Generator Frequency:** Derived from voltage inputs
  Display range is 4 to 70 Hz
  Accuracy is ±0.25% of indication or 0.1 Hz at 25°C
- **Line Current Input**: 0 to 5 Aac or 0 to 1 Aac RMS
  Display range is 0 to 5000 A
  Accuracy is ±0.5% of indication or 1 a RMS at 25°C
  (with phase selection switch and panel indication)
- **kVA:** Calculated from voltage and current inputs
  Display range is 0 to 9999 kVA
  Accuracy is ±0.5% of indication or ±0.1 kVA, whichever is greater at 25°C
- **kW:** Calculated from voltage and current inputs
  Display range is 0 to 9999 kW
  Accuracy is ±0.5% of indication or ±0.1 kW, whichever is greater at 25°C
- **Power Factor:**
  Calculated from voltage and current inputs
  Display range is =1.0 to -1.0PF both leading and lagging
  Accuracy is ±0.01PF of indication at 25°C
- **kWH:** Display range is 0-999,999,999 kWH
  Accuracy is ±0.5% of reading or ±1 kWH whichever is greater at 25°C

SPECIFICATIONS (CONT.)

ENGINE

- Oil pressure: input from sender
  Display range is 3 to 100 PSI or 103-1035kPP
  Accuracy is ±0.5%or ±1PSI/1kPA,
  whichever is greater at 25°C
  (with Stewart Warner sender 411K or equivalent)
- Coolant temperature: input from sender
  Display range is 100°F to 300°F (37°C to 149°C)
  Accuracy is ±0.5% or ±1°F/1°C
  whichever is greater at 25°C
  (with Stewart Warner sender 334P or equivalent)
- Battery voltage: input from battery is 0 to 36Vdc
  Display range is 3 to 36Vdc
  Accuracy is ±0.5% of indication or ±0.1 volts,
  whichever is greater at 25°C
- Engine runtime: display range is 0 to 99,999 hours
  Accuracy is ±0.5% of indication or ±1 hour, whichever is greater at 25°C
- Fuel level: input from sender
  Display range is 0-100%
  Accuracy is ±0.5% of indication or 1% at 25°C
- RPM: display range is 750 to 3600 RPM
  Accuracy is ±0.5% of indication or ±2 RPM,
  Whichever is greater at 25°C

NOTE: Final engine parameter accuracies are subject to sender accuracy.

Total Monitored Parameters

GENERATOR

Voltage (three phases and three phases to neutral)

Current (three phases)	kWH
KW total and per phase	Power Factor
kVA total and per phase	Frequency

ENGINE

Oil pressure	Hours to next service
Coolant temperature	Total run time
Fuel level	Engine RPM
Battery voltage	

GENERATOR SET PROTECTION

Alarms:

? Low oil pressure	? Sender failure
? Overspeed	? Low coolant level
? Overcrank	? Low fuel level
? Emergency Stop button input	
? High coolant temperature	

Pre-Alarms:

? Low oil pressure	? High battery voltage
? Engine kW overload	? Low battery voltage
? Maintenance interval timer	? Fuel leak
? High coolant temperature	? Weak battery
? Low coolant temperature	? Low fuel level
? Battery charger failure	

TIMERS

- Engine cooldown: 0 to 60 minutes
- Engine maintenance: 0 to 5000 hours
- Pre-Alarm time delays:
  Weak battery and low battery voltage: 1-10 seconds
- Alarm time delays:
  - Overspeed: 0-500ms
  - Sender failure: 0-10 seconds
- Arming delays after crank disconnect:
  - Low oil pressure: 5-15 seconds
  - High coolant temperature: 50-150 seconds
  - Pre-crank delay: 0-30 seconds

Serial Communications

The KDGC-2001 is fully programmable via the RS-232 DB9 connector. The KDGC-2001 may be programmed via the provided Windows® 95 software. This software permits individual parameter setting or complete file transfers from a personal computer to the KDGC-2001 for fast, accurate setup of the KDGC-2001.

The KDGC-2001 also has an RS-485 port for four-wire communications to the KRDP-110 remote display unit. This unit may be placed up to 4000 feet from the KDGC-2001 and provides NFPA-110 compatible annunciation of 17 operating and alarm indications with only four wires.

KDGC-2001 FRONT PANEL DISPLAY

Figure 1 shows the front panel human-machine interface (HMI) for the KDGC-2001

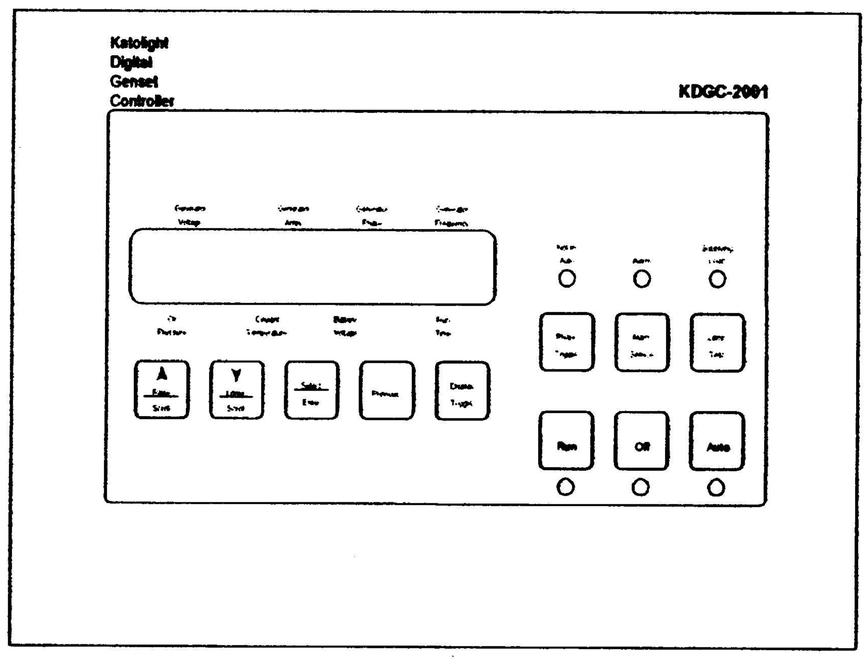

Figure 1 - Front Panel

FRONT PANEL LED INDICATORS

Run:	Indicates the engine is running (operating)
Off:	Indicates the engine is not running (shutdown)
Auto:	Indicates the unit is in the AUTO mode of operation
Not-in-Auto:	Indicates unit is not in the AUTO mode
Alarm:	Indicates an alarm situation by continuous illumination. Indicates a Pre-alarm by flashing
Supplying Load:	Indicates the system is supplying power to the connected load

PACKAGING:

KDGC-2001 is delivered ready to install. It utilizes 1/4" quick connect fasteners for interconnection to the genset.

DIMENSIONS

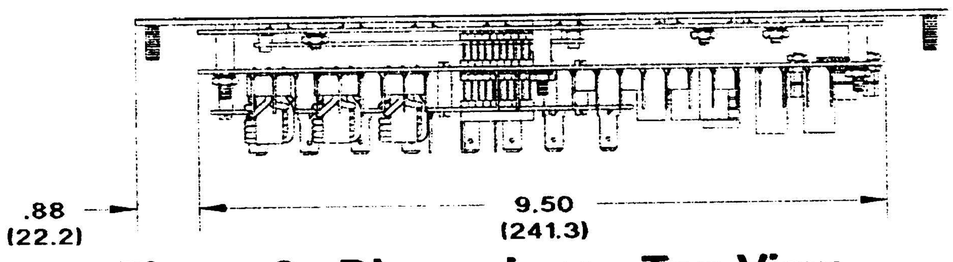

Figure 2 - Dimensions - Top View

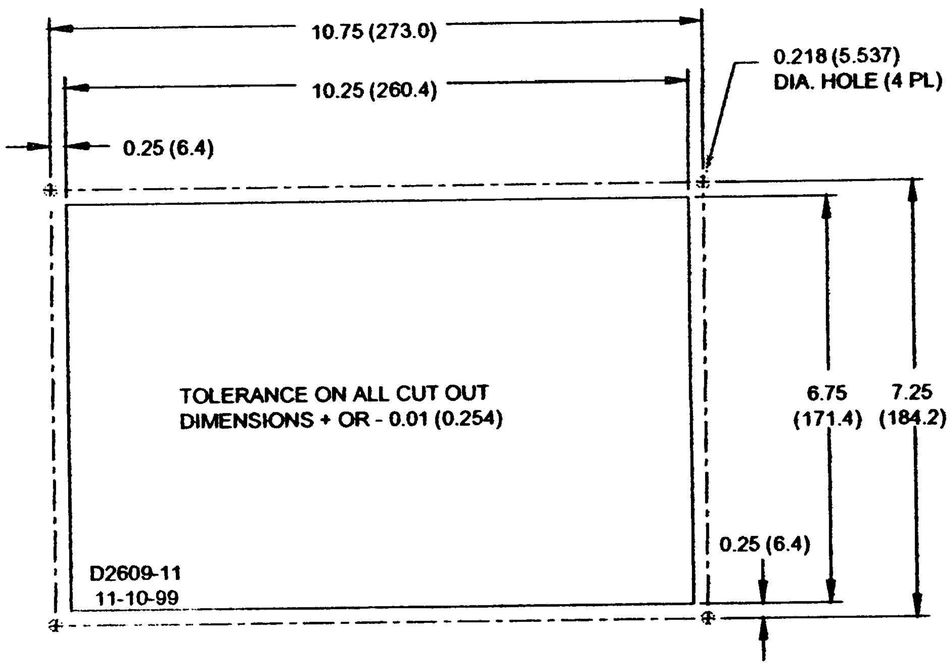

Figure 3 - Case Cutout Dimensions

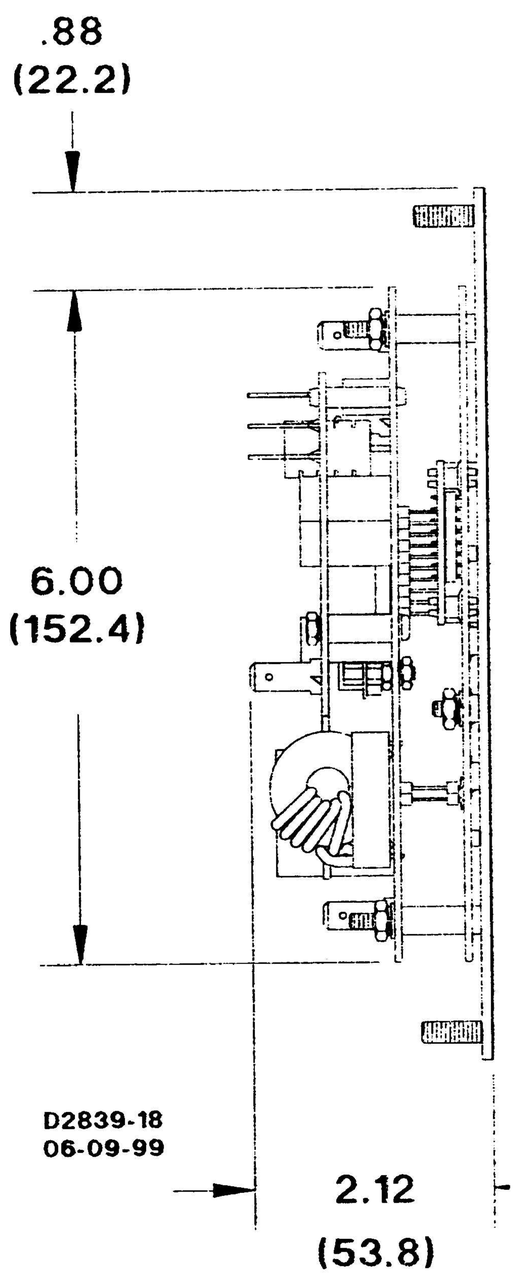

Figure 4 - Dimensions - Side View

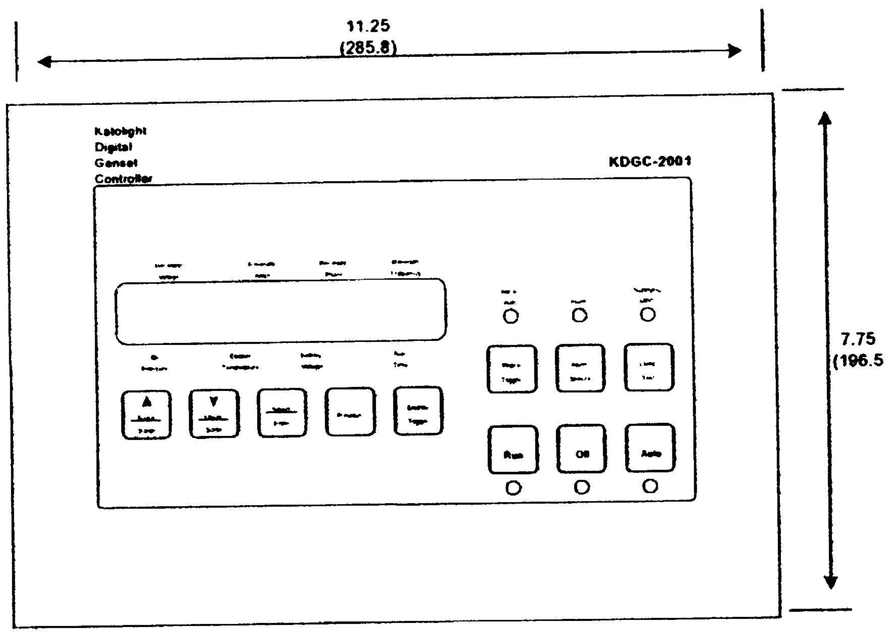

Figure 5 - Dimensions - Front View

NOTES: 1. Dimensions in parentheses are in millimeters
2. All drawings and data subject to change without notice.

CONNECTIONS

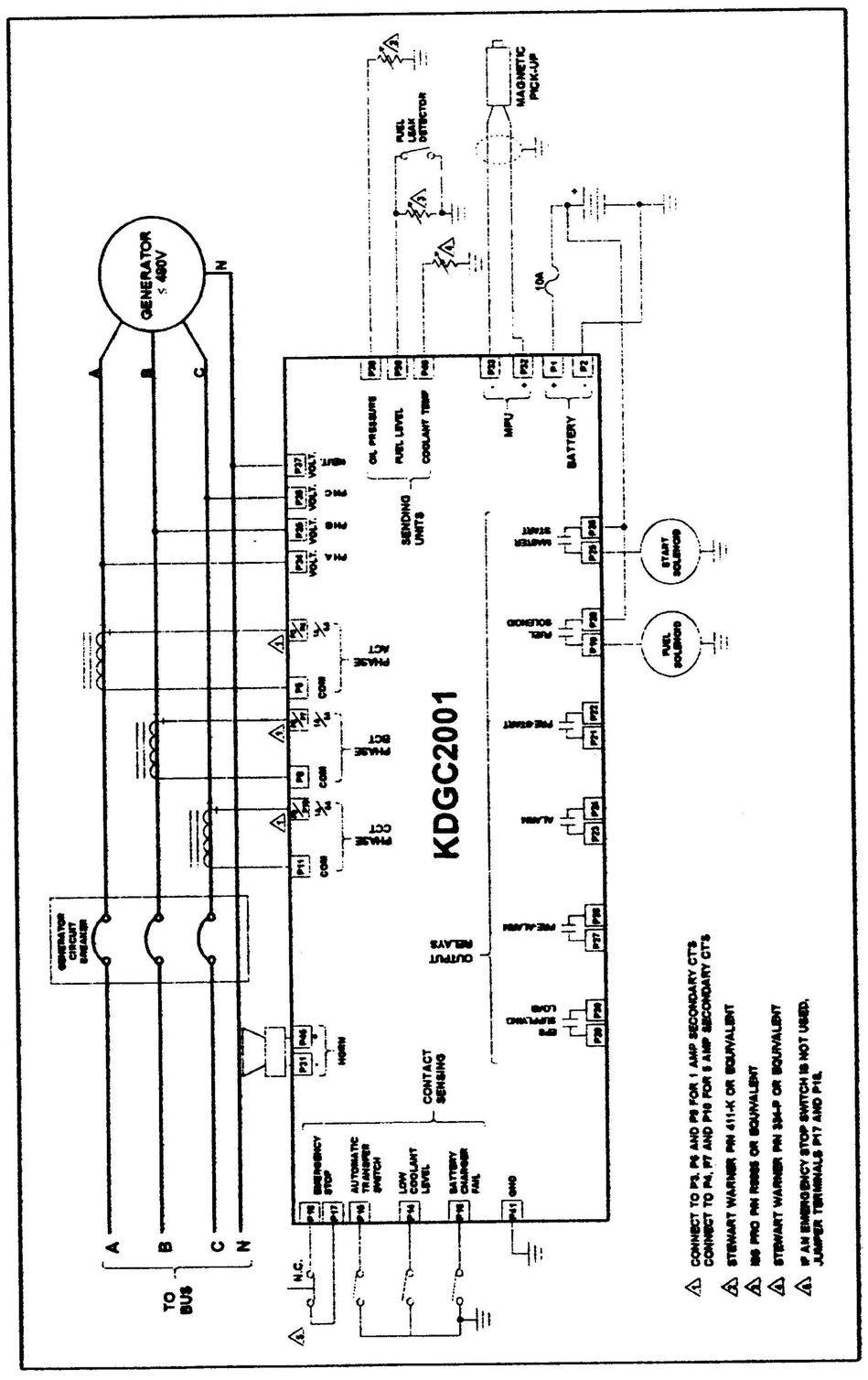

Figure 6 - KDGC 2001 Wiring

■ KRDP-110
Katolight Remote Display Panel

The KRDP-110 is used in conjunction with the KRDP family of Digital Genset Controllers to provide remote annunciation of the emergency standby generator system. This panel complies with the requirements of NFPA 110. The KDGC detects an alarm or pre-alarm conditions and communicates via RS-485 to the KRDP-110. The KRDP-110 is available in two mounting configurations, surface and semi-flush mount.

FEATURES

- Annunciation of 17 alarms and pre-alarms as detected by the KDGC
- Audible alarm horn
- Lamp test and Alarm Silence
- Power supply inputs for 12, 24Vdc or 120Vac (at the KRDP-110 location)
- RS-485 communication reduces the number of interconnection wires to four
- Two mounting configurations
- Conduit box included
- Designed for use in harsh environments

DESCRIPTION

The KRDP-110 is a remote annunciation device used in conjunction with the KDGC family of digital genset controllers, to meet the requirements of NFPA-110. The KRDP-110 may be powered from the starter batteries at 12 or 24Vdc, or it may be powered with an ac source at 120Vac. The KRDP-110 uses RS 485 communications between the KRDP-110 and the KDGC to limit to only four of the number of wires required to activate all the alarms. The RS-485 communications can be used on remote displays up to 4000 feet away from the KDGC. The KRDP-110 has 18 LEDs to indicate Alarms, Pre-Alarms and operating conditions of the emergency standby generator system. It has an audible alarm horn rated at 80db (from a distance of two feet). The KRDP-110 is available in two mounting configurations, semi-flush and surface mount. The KRDP-110 also comes complete with a conduit box for easy installation.

SPECIFICATIONS

Power Input
DC Voltage: 8-32Vdc (2.5W)
AC Voltage: 80-144Vac (5VA)

Communications Port
RS-485 interface with KDGC

Isolation
1800Vdc for one minute between chassis ground and AC voltage input. 700Vdc for one minute between any of the following groups:

- Chassis ground
- Battery and RS-485 terminals
- AC voltage inputs

RFI (Radio Frequency Interference)
Type tested using 5 watt, handheld transceiver operating at random frequencies centered around 144MHz and 440MHz with the antenna located within six inches (15 centimeters) of the device in both vertical and horizontal planes.

Environmental and Physical

- Operating temperature: -40°C to +70°C (-40°F to +158°F)
- Storage temperature: -40°C to +85°C (-40°F to +185°F)
- Salt Fog: Qualified to ASTM B 117-1989
- Vibration: The device withstands 2g in each of the three mutually perpendicular planes, swept over the range of 10 to 500Hz for a total of six sweeps, 15 minutes each sweep, without structural damage or degradation of performance.
- Shock: 15g
- Weight: 6.5 pounds (3 kilograms)
- Grounding: Twisted Pair Belden 9463 is grounded on the remote display side to earth ground.

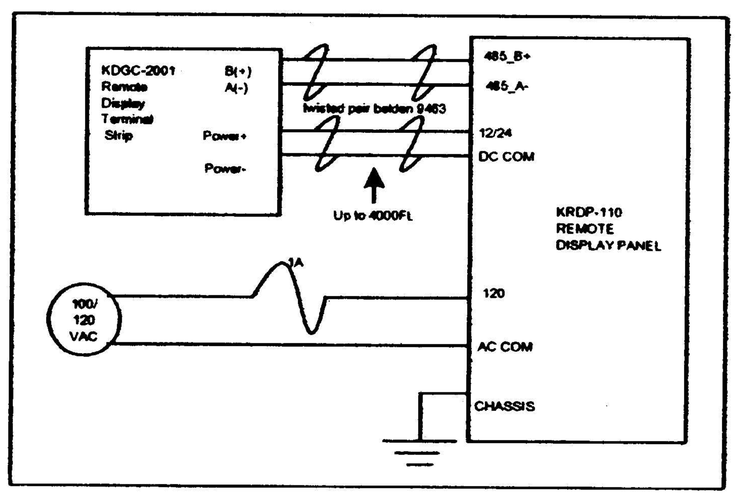

Figure 1 - Typical Interconnection Diagram

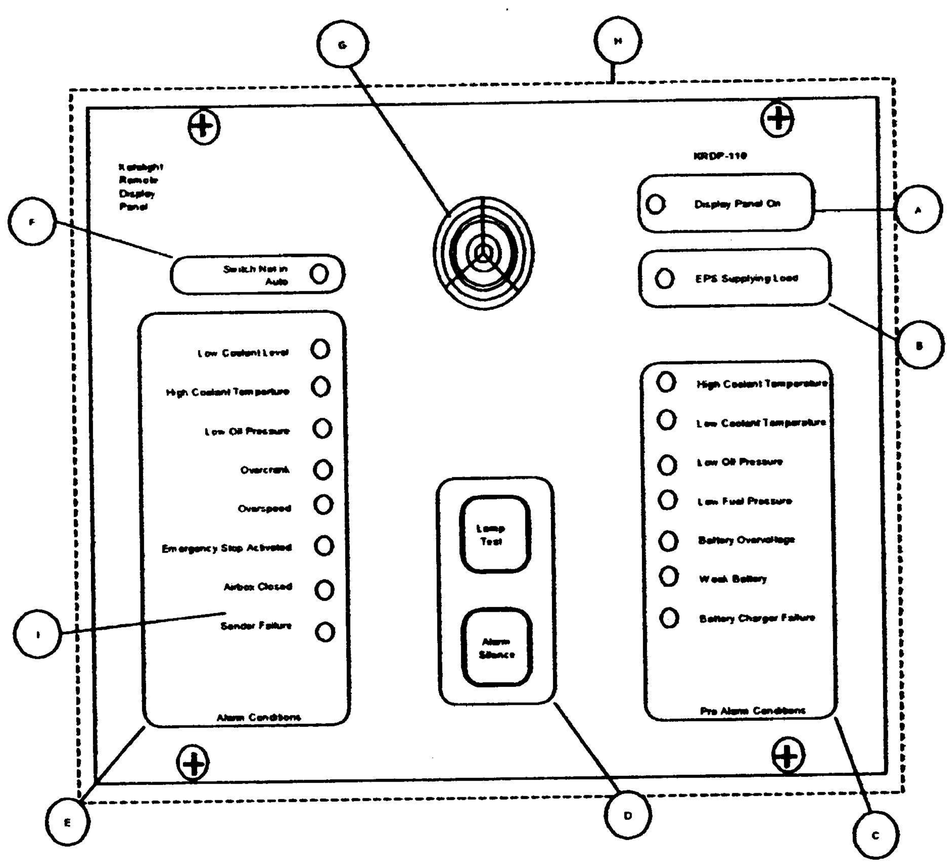

Figure 2 - Front Panel Controls and Indicators

A. LED illuminates when power is applied to the KRDP-110.

B. LED turns ON when the generator supplies more than two percent of rated current.

C. Pre-Alarm Conditions

D. Pushbuttons
Lamp Test Pushbutton exercises the audible alarm and tests all LEDs.
Alarm Silence Pushbutton silences the audible alarm.

E. Alarm Conditions

F. LED illuminates when the KDGC is not in AUTO

G. Audible alarm annunciates when KDGC is not in AUTO and when alarms and pre-alarms occur

H. Dashed line indicates the front panel outside edges when semi-flush mounted.

I. When a KRDP-110-1 is selected, this label indicates "Fuel Leak/Fuel Sender Failed".

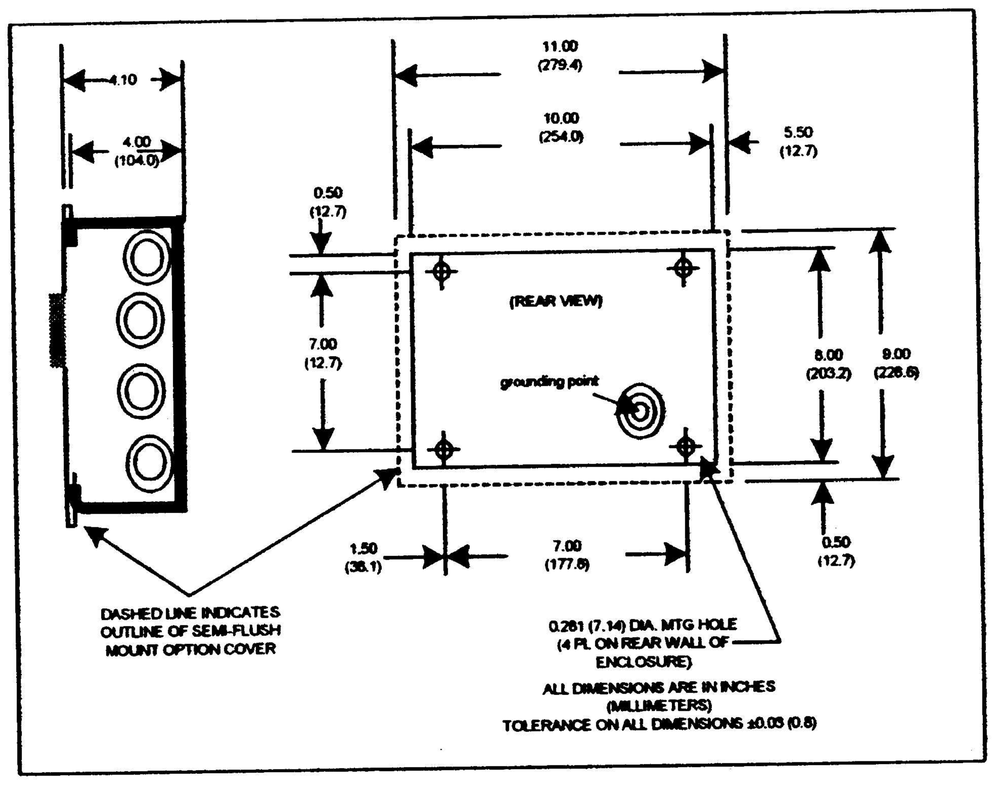

Figure 3 - Outline Diagram

ORDERING INFORMATION

Style Number Identification Chart

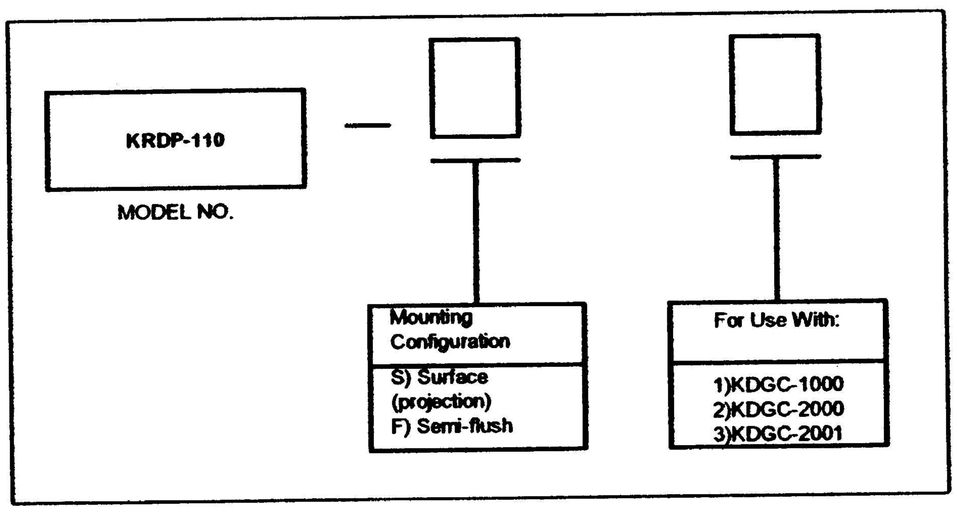

■ Repetitive Alarm Annunciator Panel:

KATOLIGHT ANNUNCIATORS MEET THESE SPECIFICATIONS: The National Electric Code: Section 700-12, and the National Fire Protection Association: Section No. 110, standard for emergency and standby power systems. These codes require audible and visual signal devices powered by an electrical storage battery to give warning of derangement or alarm conditions in the alternate electric power source (standby electric generating set). The signal device (ANNUNCIATOR) must be installed outside the standby generating room in a location readily observed by operating personnel at a regular work station. In accordance with NFPA 110 the alarm of the annunciator system will not be permanently shut down or bypassed. Katolight's control of the repetitive alarm annunciator audible system allows for a first alarm to be silenced and if a second alarm occurs, the audible alarm system will again sound the alarm. Other Codes and Specifications also include these requirements.

The attractive standard panel face is of cold rolled steel flat black paint (18 gauge).

12 OR 24 Volt

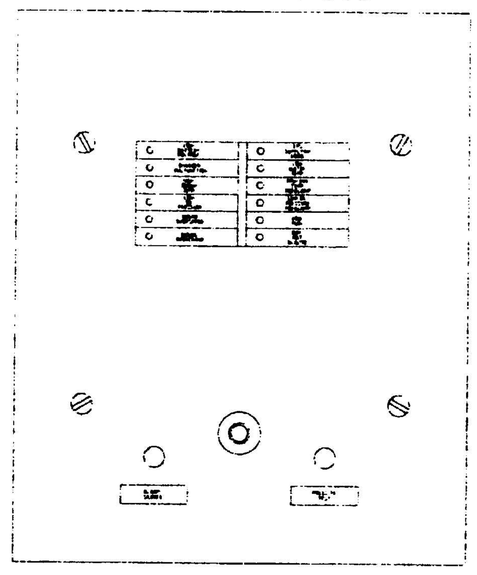

FUNCTIONAL LED'S ARE AUDIBLE/VISUAL OR BOTH

LED Legend	Condition Indicated	Derangement Signals		Adders Required	
		Audible	Visual	External Contacts	Contact Location
Low Battery Voltage	Charger Failed	NO	YES	N.O.	Battery Charger
Charger Malfunction	Battery Charger Failed	NO	YES	N.O.	Battery Charger
High Engine Temperature	Excessive Water Temperature	YES	YES	N.O.	Engine Control
Low Oil Pressure	Low Lube Oil Pressure	YES	YES	N.O.	Engine Control
Engine Overspeed	Engine Overspeed	YES	YES	N.O.	Engine Control
Engine Overcrank	Elec. Plant Failed to Start	YES	YES	N.O.	Engine Control
EPS Supplying Load	Elec. Plant Carrying Load	NO	YES	N.O.	Transfer Switch
Low Water Temperature	Low Water Jacket Temperature	YES	YES	N.O.	On Engine
High Engine Temp. Prealarm	Water Temp Approaching Limit	YES	YES	N.O.	Panel
Low Oil Pressure Prealarm	Oil Pressure Approaching Limit	YES	YES	N.O.	Panel
Low Fuel	Fuel System Low	YES	YES	N.O.	In Fuel Tank
Unit Not in Auto	Elec. Plant Not in Automatic	YES	YES	N.O.	Panel On Select Sw.

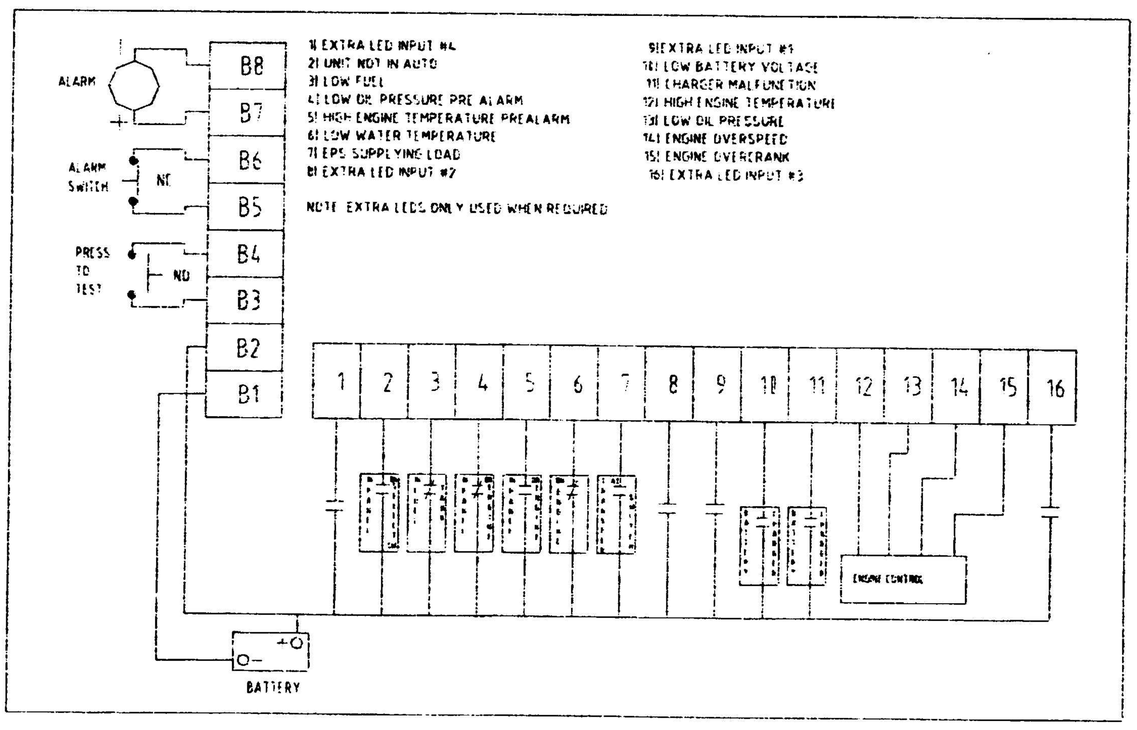

PANEL COMPONENTS:

KATOLIGHT ANNUNCIATOR PANELS are designed for either surface or flush mounting. The enclosure has knockouts on top, bottom or either side for ease of installation. The annunciator panels are to be used in conjunction with KATOLIGHT autostart control KASSEC, KLAS 33 and 61 series. NOTE: Up to four extra LEDS are available.